US 20050134562A1

(19) United States

(12) Patent Application Publication

(10) Pub. No.: US 2005/0134562 A1

(43) Pub. Date: Jun. 23, 2005

Grant et al.

(54) SYSTEM AND METHOD FOR CONTROLLING HAPTIC DEVICES HAVING MULTIPLE OPERATIONAL MODES

(76) Inventors: **Danny A. Grant**, Montreal (CA); **Kollin M. Tierling**, Milpitas, CA (US); **Juan Manuel Cruz-Hernandez**, Montreal (CA); **Alex S. Goldenberg**, San Francisco, CA (US)

Correspondence Address:
COOLEY GODWARD LLP
ATTN: PATENT GROUP
11951 FREEDOM DRIVE, SUITE 1700
ONE FREEDOM SQUARE- RESTON TOWN CENTER
RESTON, VA 20190-5061 (US)

(21) Appl. No.: **10/873,643**

(22) Filed: **Jun. 23, 2004**

Related U.S. Application Data

(60) Provisional application No. 60/530,979, filed on Dec. 22, 2003.

Publication Classification

(51) Int. Cl.[7] G09G 5/08

(52) U.S. Cl. 345/161

(57) **ABSTRACT**

A haptic device having a plurality of operational modes, including a first operational mode and a second operational mode is provided. The first operational mode is associated with a frequency range. The second operational mode is associated with a frequency range that is different from the frequency range of the first operational mode. A controller is coupled to the haptic device, and is configured to send the haptic device a plurality of control schemes. Each control scheme is uniquely associated with an operational mode from the plurality of operational modes.

Another embodiment provides a method that includes providing power to a haptic device configured to cause the haptic device to provide a haptic sensation above a pre-determined sensation threshold. A voltage pulse that is configured to change the haptic sensation output by the haptic device by a pre-determined amount within a pre-determined time period is also applied to the haptic device.

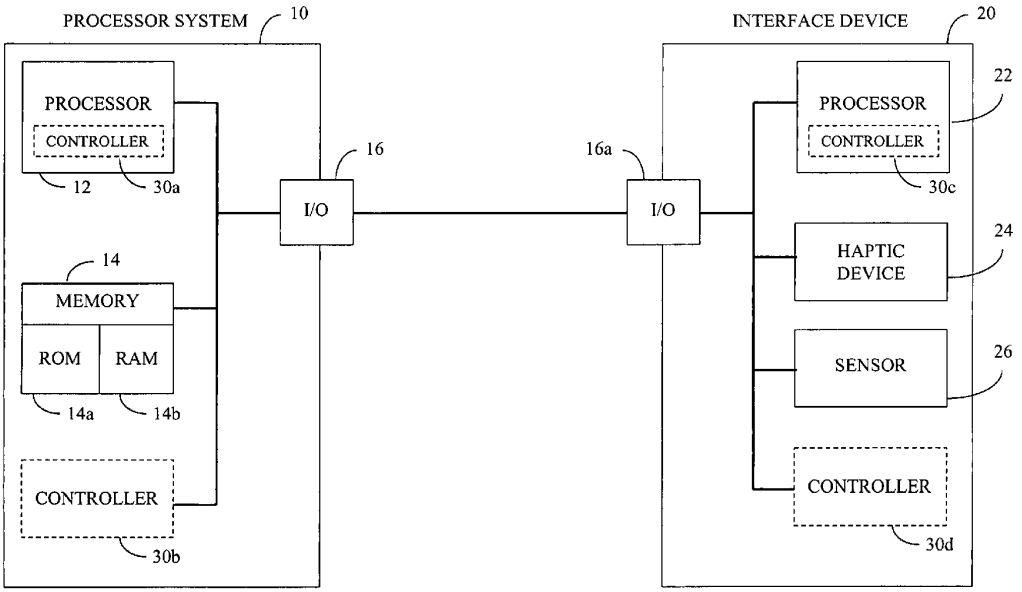

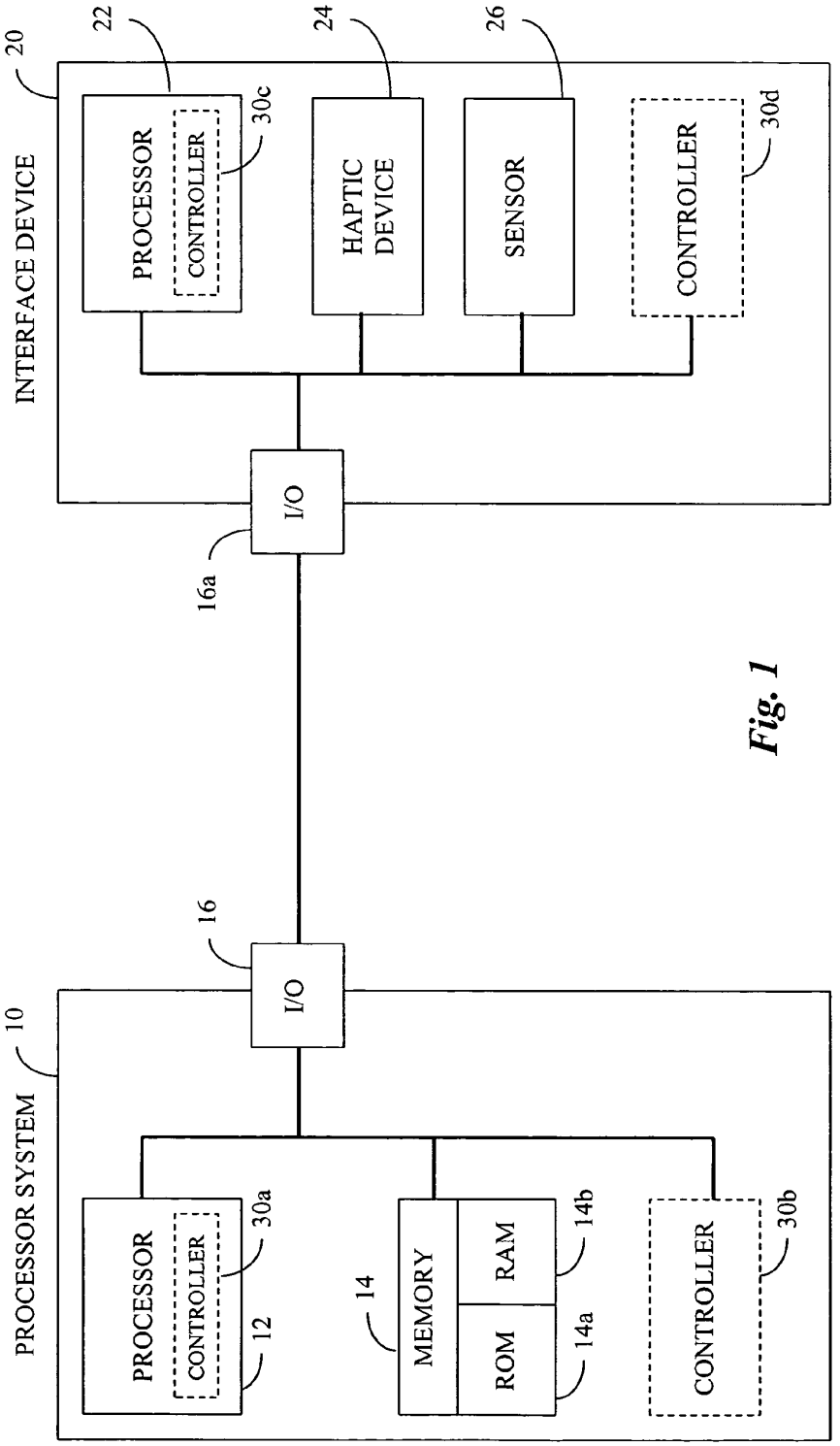
INTERFACE DEVICE
20
22
PROCESSOR
CONTROLLER
30c
24
HAPTIC DEVICE
26
SENSOR
CONTROLLER
30d
I/O
16a
16
I/O
PROCESSOR SYSTEM
10
PROCESSOR
CONTROLLER
30a
12
14
MEMORY
RAM
14b
ROM
14a
CONTROLLER
30b

Fig. 1

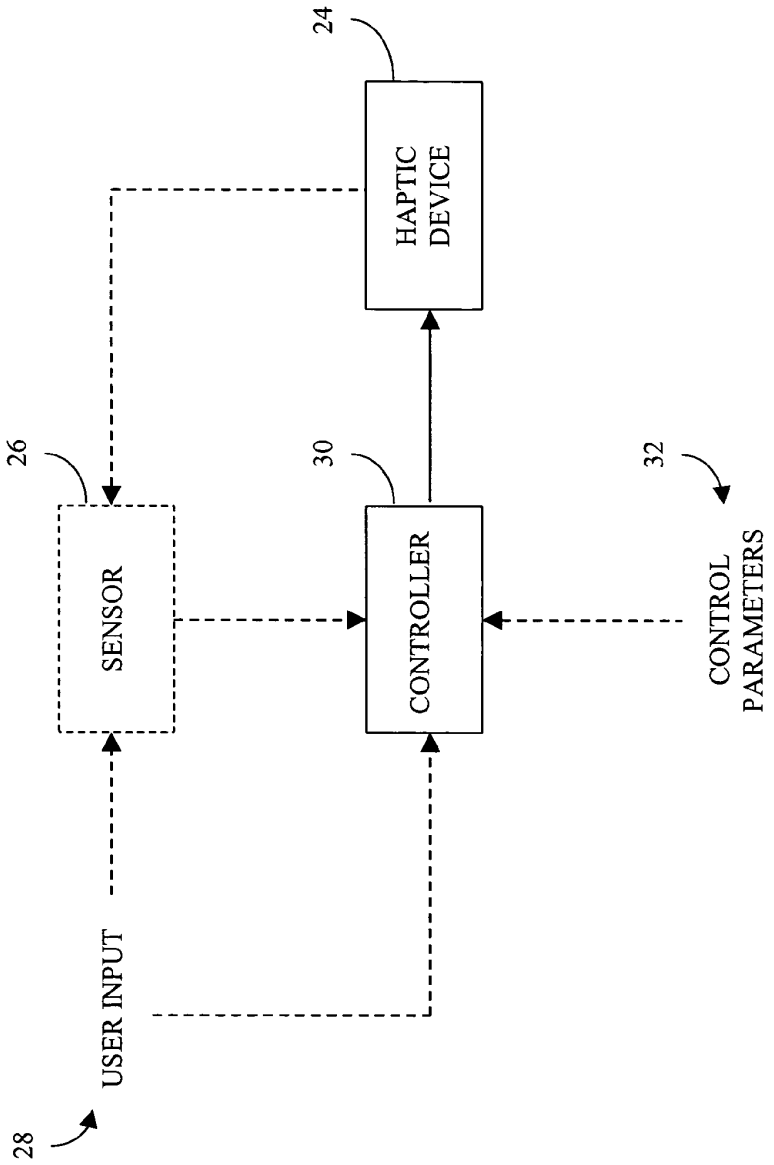
24
HAPTIC DEVICE
26
SENSOR
30
CONTROLLER
32
CONTROL PARAMETERS
USER INPUT
28

Fig. 2A

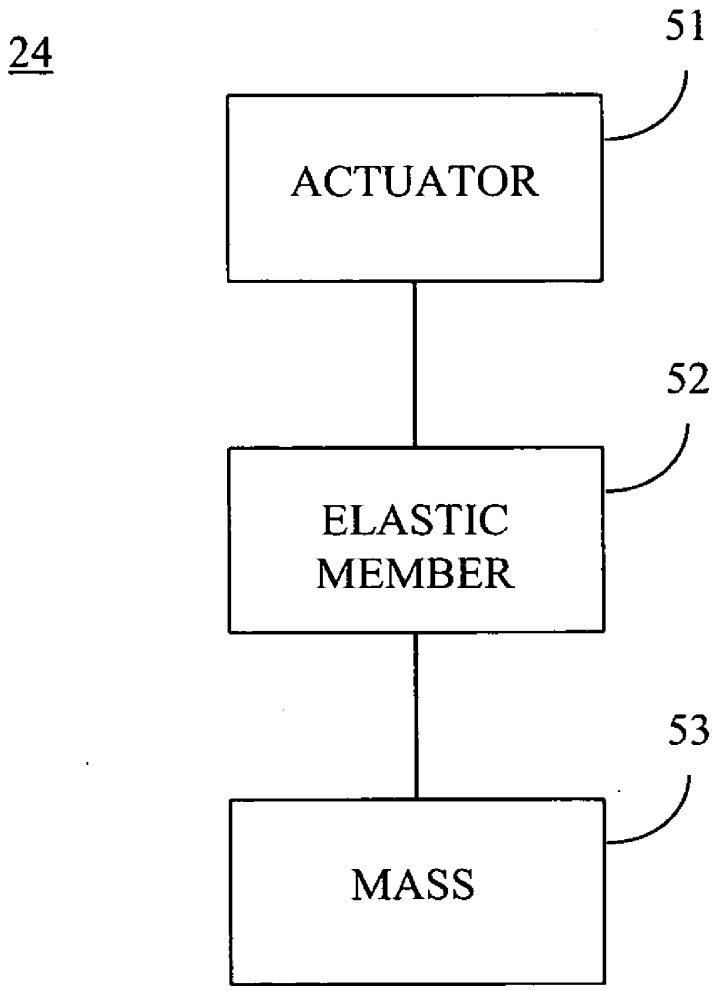

Fig. 2B

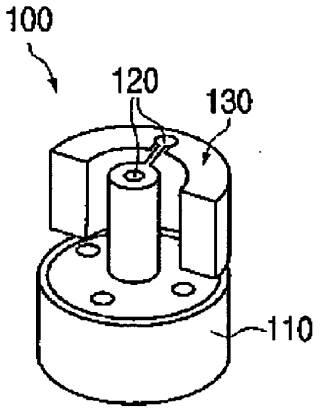

Fig. 3A

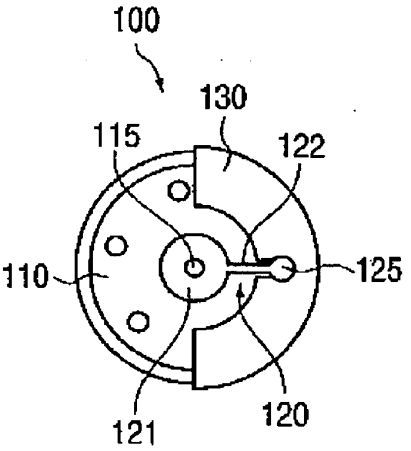

Fig. 3B

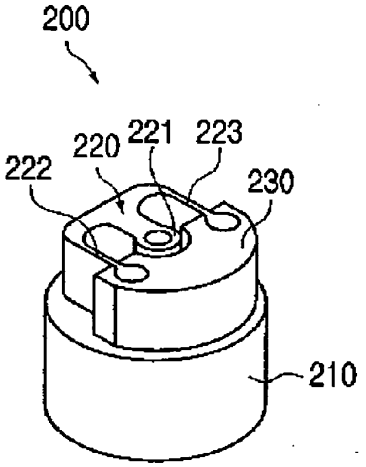

Fig. 4A

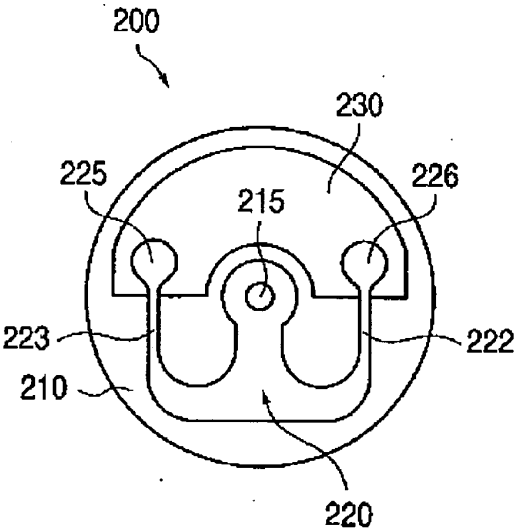

Fig. 4B

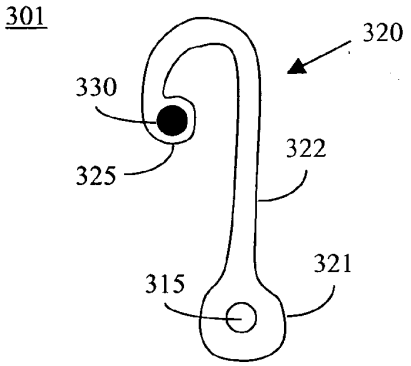

Fig. 5

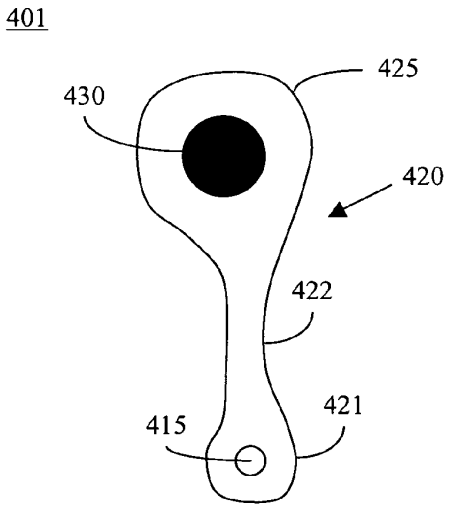

Fig. 6

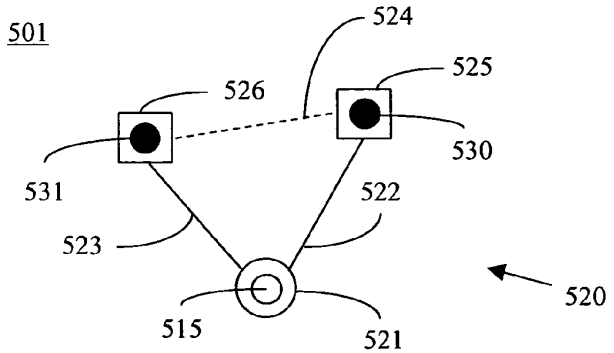

Fig. 7

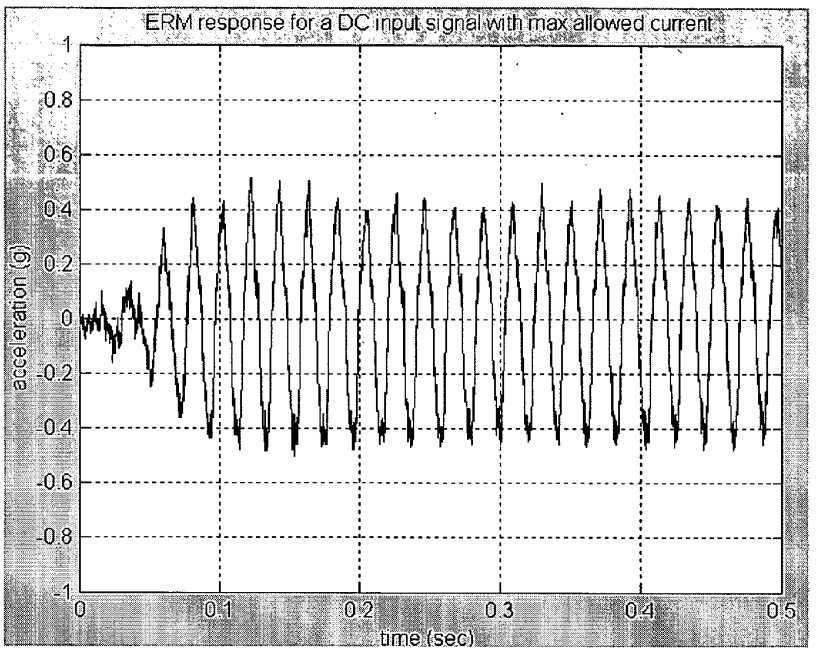
ERM response for a DC input signal with max allowed current
acceleration (g)
time (sec)
1
0.8
0.6
0.4
0.2
0
-0.2
-0.4
-0.6
-0.8
-1
0
0.1
0.2
0.3
0.4
0.5

Fig. 8

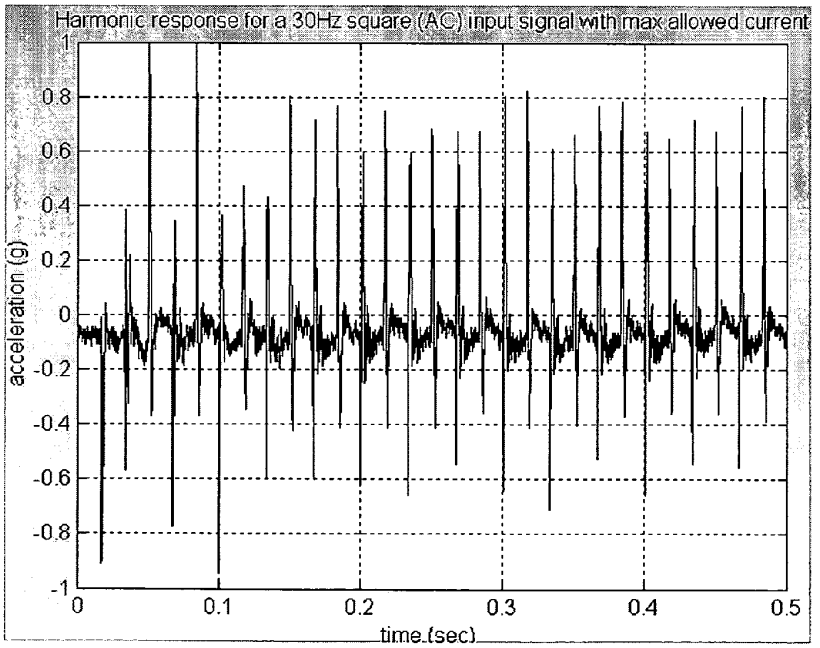
Harmonic response for a 30Hz square (AC) input signal with max allowed current
acceleration (g)
time (sec)
1
0.8
0.6
0.4
0.2
0
-0.2
-0.4
-0.6
-0.8
-1
0
0.1
0.2
0.3
0.4
0.5

Fig. 9

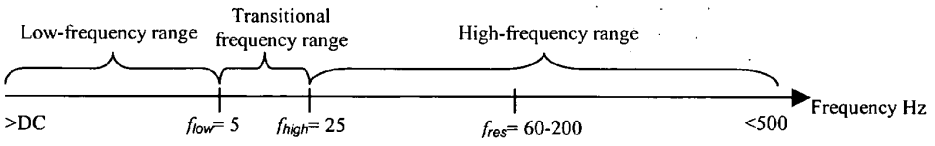
Low-frequency range
Transitional frequency range
High-frequency range
>DC
f_{low}= 5
f_{high}= 25
f_{res}= 60-200
<500
Frequency Hz

Fig. 10

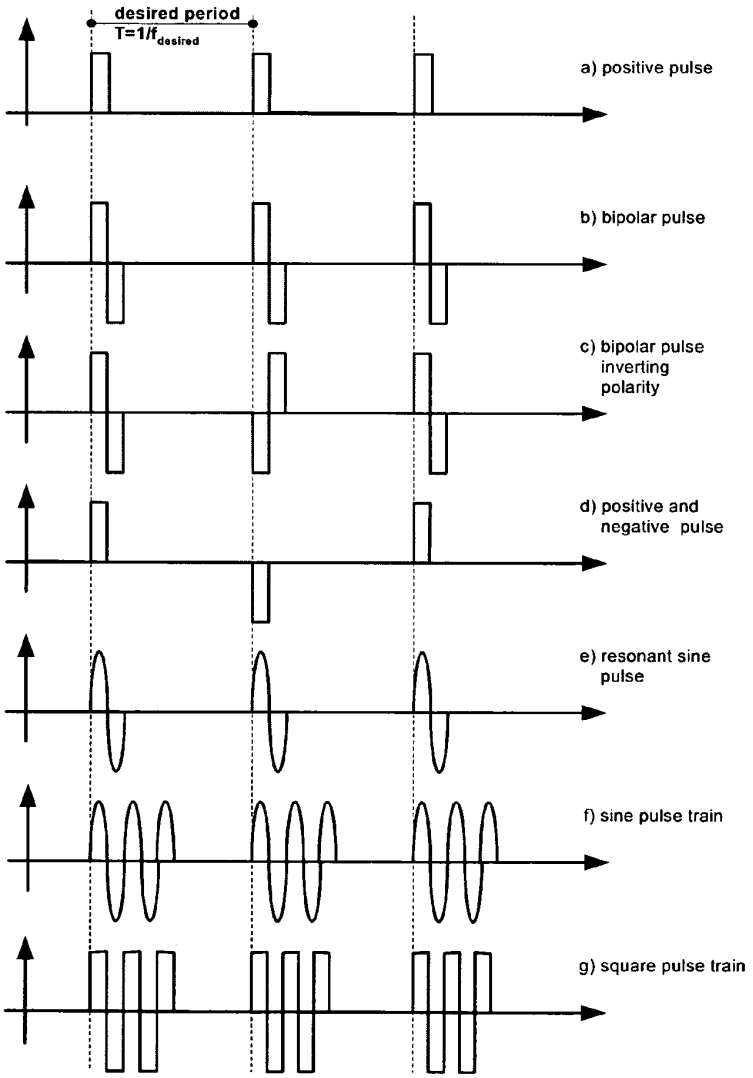
desired period
T=1/f desired
a) positive pulse
b) bipolar pulse
c) bipolar pulse inverting polarity
d) positive and negative pulse
e) resonant sine pulse
f) sine pulse train
g) square pulse train

Fig. 11

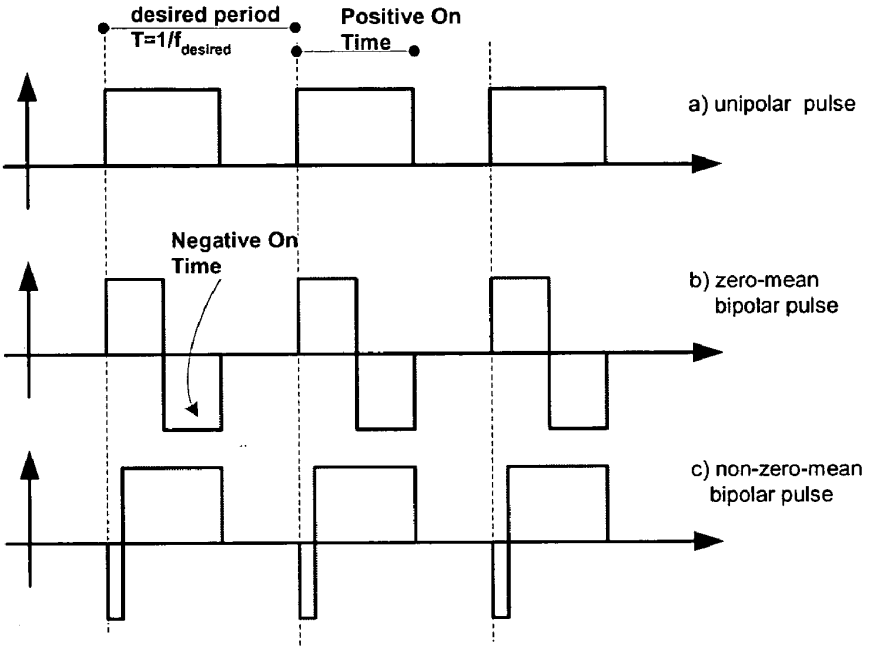
desired period
T=1/f desired
Positive On
Time
a) unipolar pulse
Negative On
Time
b) zero-mean
bipolar pulse
c) non-zero-mean
bipolar pulse

Fig. 12

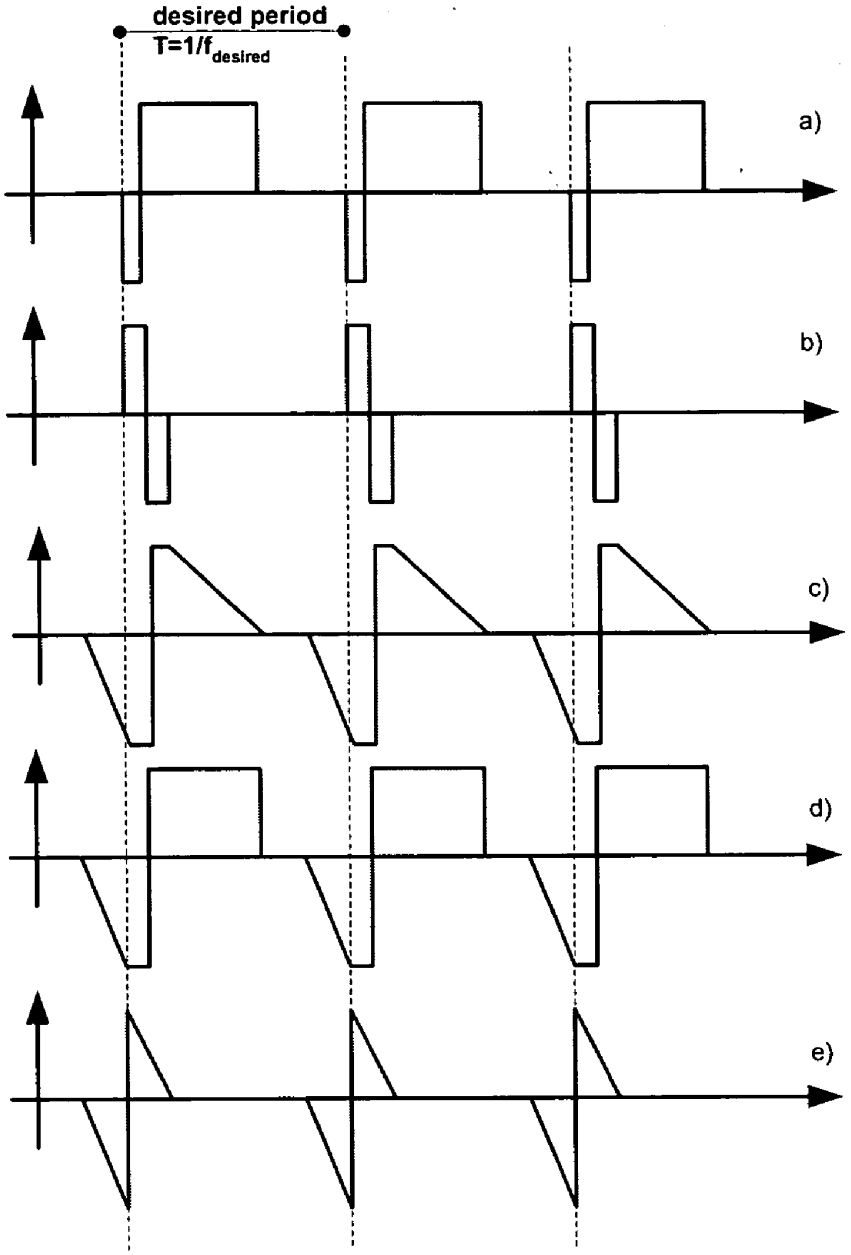

Fig. 13

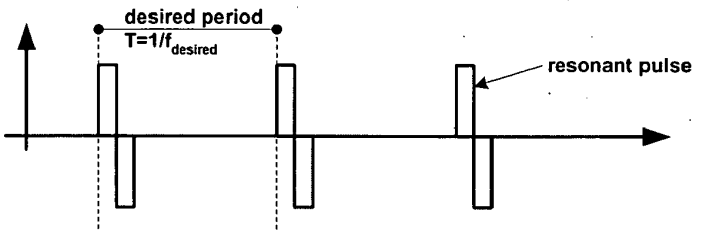
desired period
T=1/f desired
resonant pulse

Fig. 14

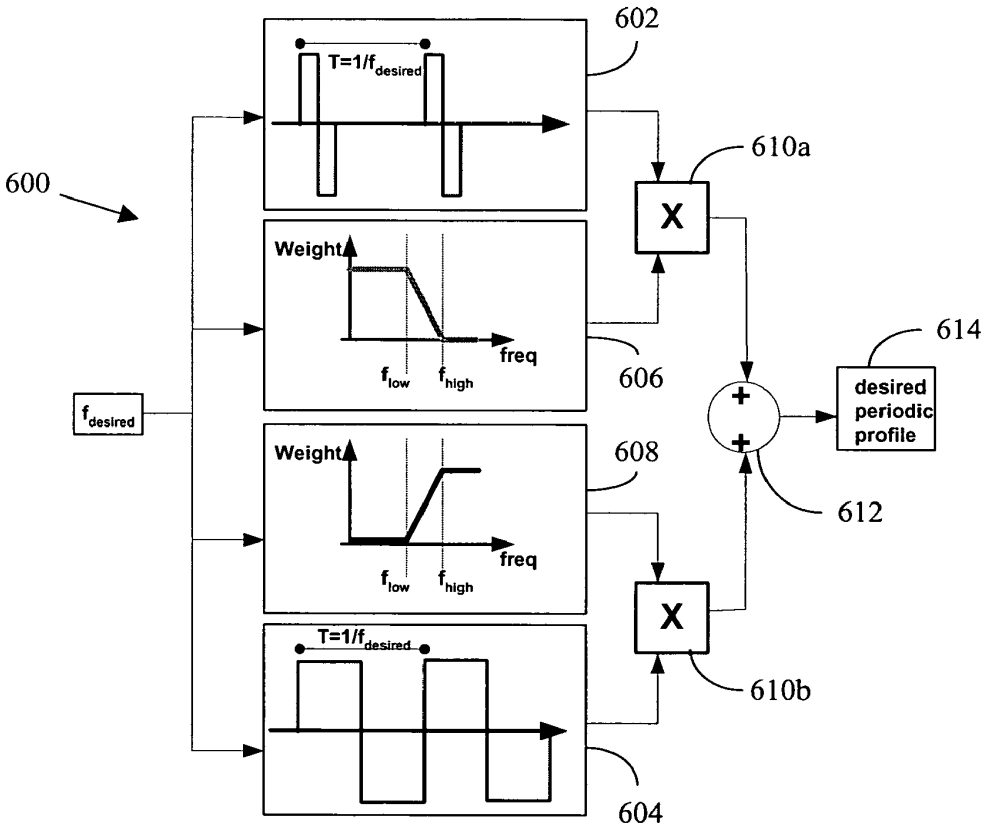
600
602
T=1/f desired
610a
X
Weight
freq
f low
f high
606
614
f desired
desired periodic profile
608
612
Weight
freq
f low
f high
X
T=1/f desired
610b
604

Fig. 15

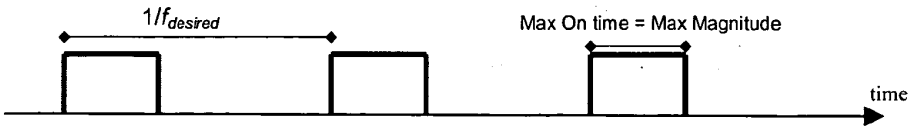

Fig. 16

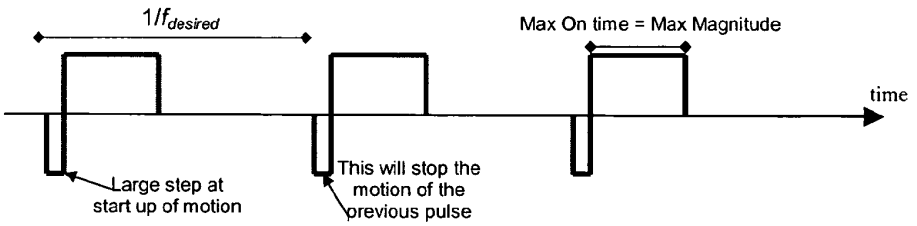

Fig. 17

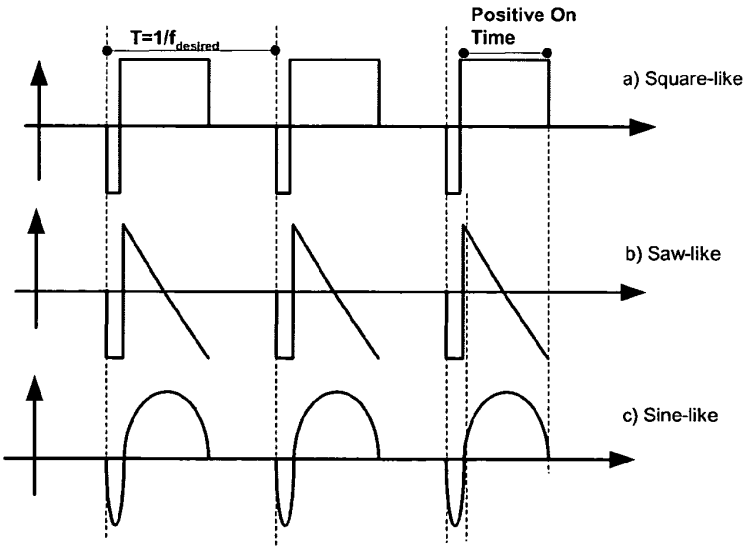

Fig. 18

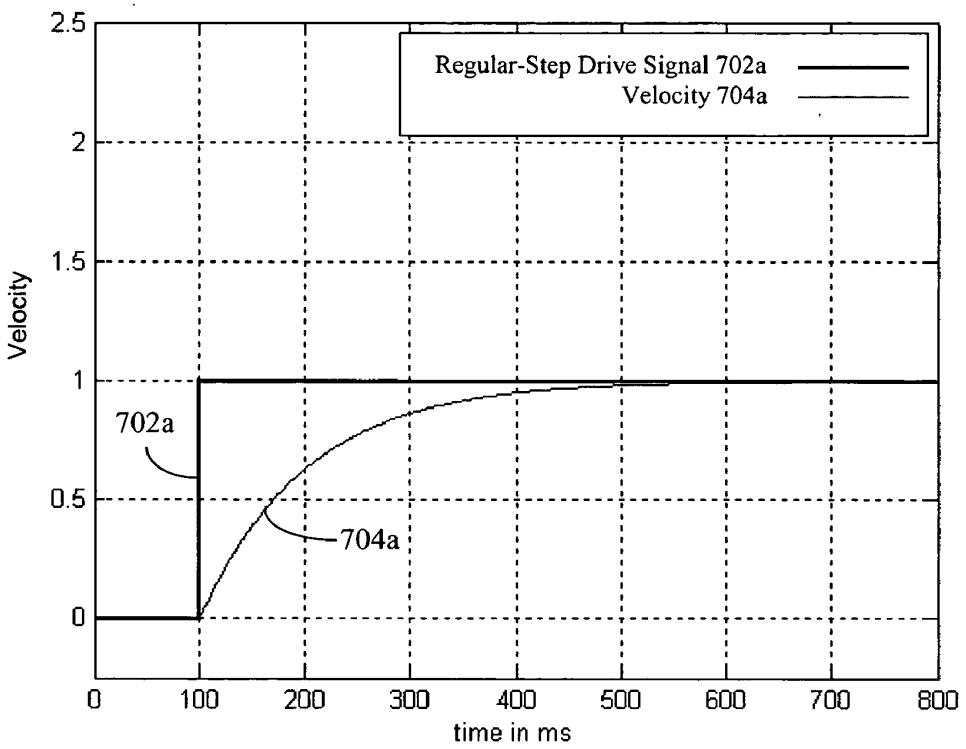
Regular-Step Drive Signal 702a
Velocity 704a
Velocity
2.5
2
1.5
1
0.5
0
702a
704a
0
100
200
300
400
500
600
700
800
time in ms

Fig. 19A

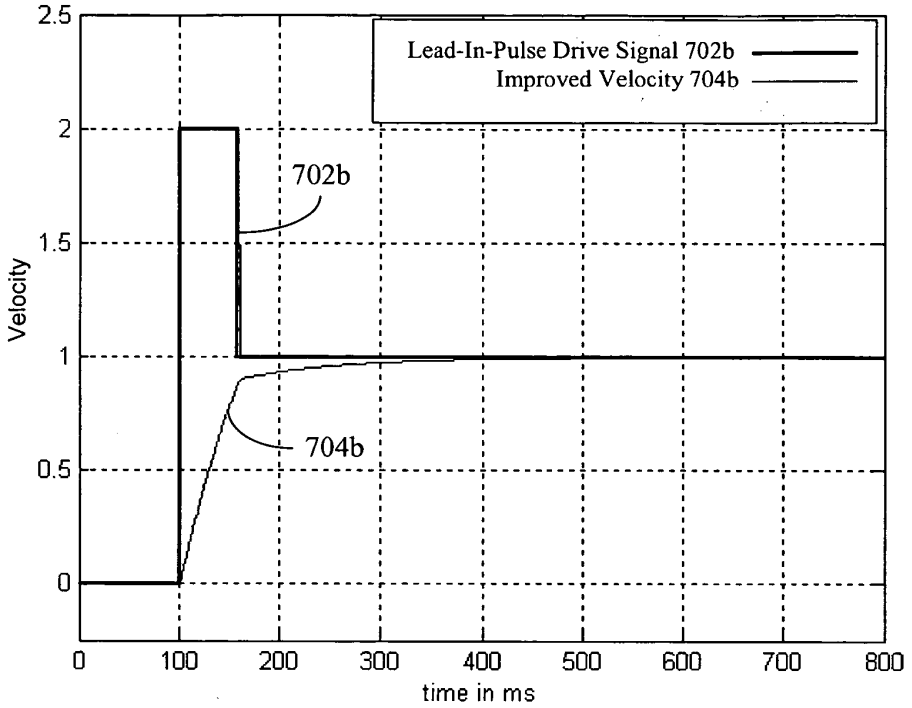
Lead-In-Pulse Drive Signal 702b
Improved Velocity 704b
702b
704b
Velocity
time in ms
2.5
2
1.5
1
0.5
0
0
100
200
300
400
500
600
700
800

Fig. 19B

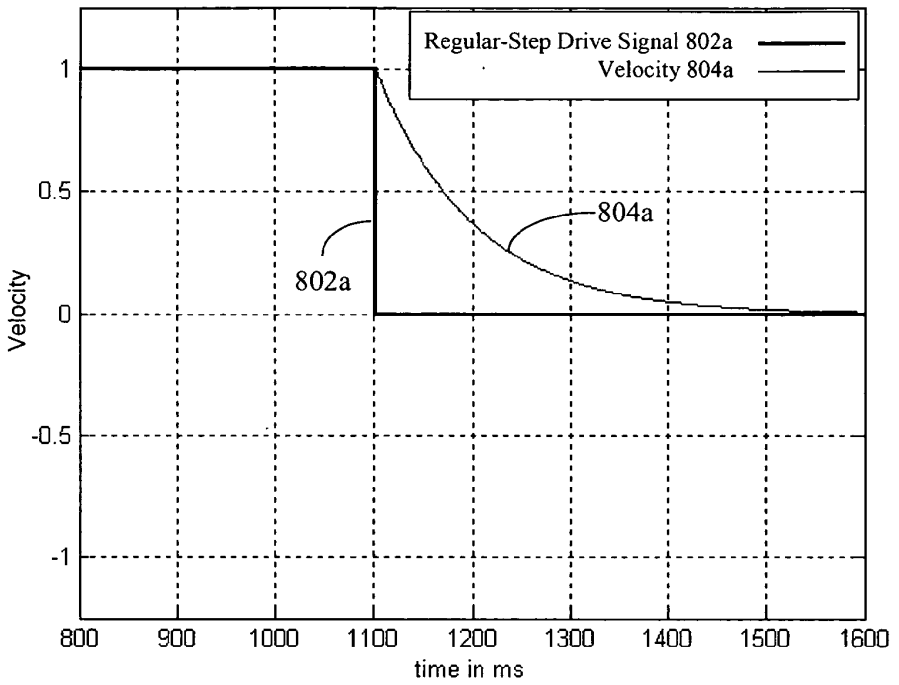
Regular-Step Drive Signal 802a
Velocity 804a
1
0.5
0
-0.5
-1
Velocity
802a
804a
800
900
1000
1100
1200
1300
1400
1500
1600
time in ms

Fig. 20A

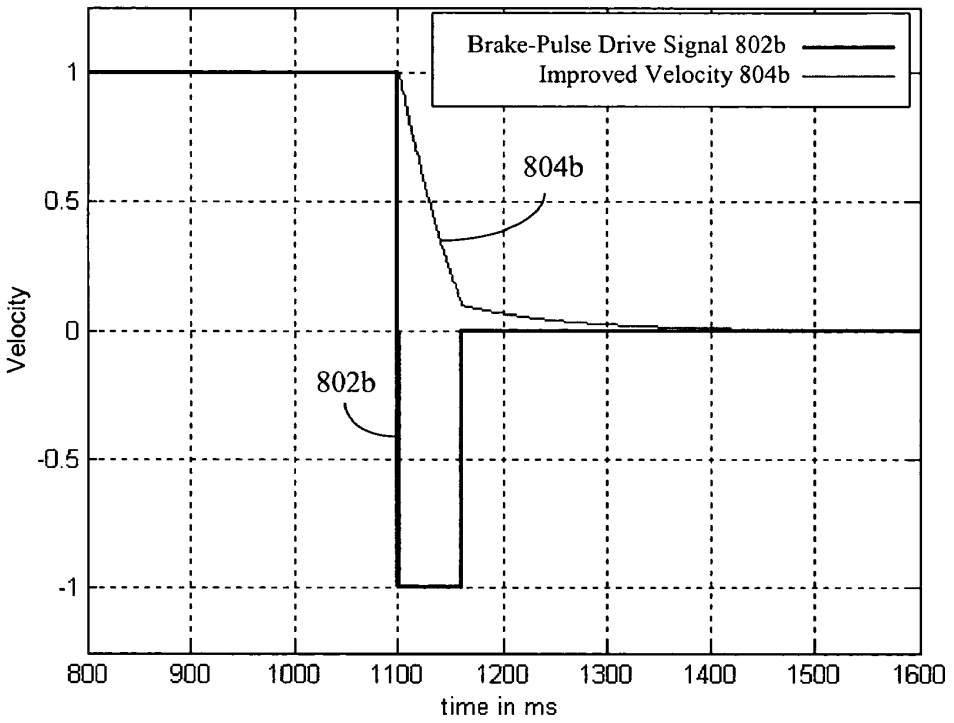
Brake-Pulse Drive Signal 802b
Improved Velocity 804b
804b
802b
Velocity
1
0.5
0
-0.5
-1
800
900
1000
1100
1200
1300
1400
1500
1600
time in ms

Fig. 20B

SYSTEM AND METHOD FOR CONTROLLING HAPTIC DEVICES HAVING MULTIPLE OPERATIONAL MODES

PRIORITY

[0001] This Application claims priority to U.S. Provisional Patent Application No. 60/530,979, file on Dec. 22, 2003, entitled, "System and Method for Controlling Haptic Devices Having Multiple Operational Modes," the entire disclosure of which is incorporated herein by reference.

BACKGROUND

[0002] The invention relates generally to haptic feedback devices. More specifically, the invention relates to controlling haptic devices each having multiple operational modes.

[0003] Computer users often use interface devices to provide information to computers or other electronic devices. For example, with such interface devices, a user can interact with an environment displayed by a computer to perform functions and tasks on the computer, such as playing a game, experiencing a simulation or virtual reality environment, using a computer aided design system, operating a graphical user interface (GUI), or otherwise affecting processes or images depicted on an output device of the computer. Common human interface devices for computers or electronic devices include, for example, a joystick, button, mouse, trackball, knob, steering wheel, stylus, tablet, pressure-sensitive ball, remote control, wireless phone, and stereo controls.

[0004] In some interface devices, feedback, such as force feedback, can also be provided to a user. Each of these interface devices, for example, includes one or more haptic devices, which are connected to a controlling processor and/or computer. Consequently, by a controlling processor, controller, and/or computer, haptic forces produced by the haptic device can be controlled in coordination with actions of the user and/or events associated with an audible environment or a graphical or displayed environment by sending control signals or commands to haptic feedback device.

[0005] Multi-mode haptic devices that provide desirable performance have been developed. For example, U.S. application Ser. No. 10/301,809, entitled, "Haptic Feedback Using Rotary Harmonic Moving Mass," the entire disclosure of which is incorporated herein by reference, discloses haptic feedback using a device having a rotary harmonic moving mass. Accordingly, additional systems and methods for controlling multi-mode haptic devices are desirable.

SUMMARY

[0006] An embodiment of the invention provides a system and method for controlling multi-mode haptic devices. A haptic device having multiple operational modes, including a first operational mode and a second operational mode is provided. The first operational mode is associated with a frequency range. The second operational mode is associated with a frequency range that is different from the frequency range of the first operational mode. A controller is coupled to the haptic device, and is configured to send the haptic device multiple control schemes. Each control scheme is uniquely associated with an operational mode from the multiple operational modes. According to an embodiment of the invention, the controller is configured to combine each control scheme from the multiple control schemes prior to sending the multiple control schemes to the haptic device.

[0007] Another embodiment of the invention provides a method that uses a voltage pulse to reduce the response time of a device. According to this method, steady-state power is provided to a haptic device that is configured to cause the haptic device to output a haptic sensation above a pre-determined sensation threshold. A voltage pulse, which is configured to change the haptic sensation output by the haptic device by a pre-determined amount within a pre-determined, reduced response time, is applied to the haptic device. According to an embodiment of the invention, the voltage pulse is applied to the haptic device prior to providing the steady-state power to the haptic device. According to another embodiment, the voltage pulse is applied to the haptic device after terminating the steady-state power provided to the haptic device. The voltage pulse can be applied to a single-mode haptic device or a multi-mode haptic device. According to one or more embodiments of the invention, use of such a voltage pulse can improve response time of a haptic device to which the pulse is applied (e.g., for stopping or starting haptic effects, etc.).

BRIEF DESCRIPTION OF THE DRAWINGS

[0008] **FIG. 1** is a block diagram of a system including a processor system and an interface device, according to an embodiment of the invention.

[0009] **FIG. 2A** is a diagram illustrating a haptic device, a controller, and a sensor, according to an embodiment of the invention.

[0010] **FIG. 2B** is a block diagram of a haptic device, according to an embodiment of the invention.

[0011] **FIG. 3A** is a perspective view of a haptic device, according to an embodiment of the invention.

[0012] **FIG. 3B** is a cross-sectional view of the haptic device shown in **FIG. 3A**.

[0013] **FIG. 4A** is a perspective view of a haptic device, according to an embodiment of the invention.

[0014] **FIG. 4B** is a cross-sectional view of the haptic device shown in **FIG. 4A**.

[0015] **FIG. 5** shows a top view of a portion of a haptic device, according to an embodiment of the invention.

[0016] **FIG. 6** shows a top view of a portion of a haptic device, according to an embodiment of the invention.

[0017] **FIG. 7** shows a top view of a portion of a haptic device, according to an embodiment of the invention.

[0018] **FIG. 8** is a plot showing an acceleration-versus-time response of a haptic device, according to an embodiment of the invention.

[0019] **FIG. 9** is a plot showing an acceleration-versus-time response of a haptic device, according to an embodiment of the invention.

[0020] **FIG. 10** is a plot showing drive-signal frequency ranges of a multi-mode haptic device, according to an embodiment of the invention.

[0021] **FIGS. 11A-11G** are plots showing examples of signals used to drive a haptic device, according to an embodiment of the invention.

[0022] **FIGS. 12A-12C** are plots showing examples of signals used to drive a haptic device, according to an embodiment of the invention.

[0023] **FIGS. 13A-13E** are plots showing examples of signals used to drive a haptic device, according to an embodiment of the invention.

[0024] **FIG. 14** is a plot showing an example of a signal used to drive a haptic device, according to an embodiment of the invention.

[0025] **FIG. 15** is a diagram illustrating elements of an embodiment of the invention.

[0026] **FIG. 16** is a plot showing an example of a signal used to drive a haptic device, according to an embodiment of the invention.

[0027] **FIG. 17** is a plot showing an example of a signal used to drive a haptic device, according to an embodiment of the invention.

[0028] **FIGS. 18A-18C** are plots showing examples of signals used to drive a haptic device, according to an embodiment of the invention.

[0029] **FIG. 19A** is a plot showing an example of a step signal used to drive a haptic device and the corresponding response of the haptic device, according to an embodiment of the invention.

[0030] **FIG. 19B** is a plot showing an example of a signal used to drive a haptic device and the corresponding response of the haptic device, according to an embodiment of the invention.

[0031] **FIG. 20A** is a plot showing an example of a step signal used to drive a haptic device and the corresponding response of the haptic device, according to an embodiment of the invention

[0032] **FIG. 20B** is a plot showing an example of a signal used to drive a haptic device and the corresponding response of the haptic device, according to an embodiment of the invention.

DETAILED DESCRIPTION

[0033] Systems and methods for controlling multi-mode haptic devices are described. More specifically, an embodiment of the invention is described in the context of a haptic device that has a multiple operational modes, each of which is associated with a frequency range. A controller is coupled to the haptic device and is configured to send the haptic device multiple control schemes associated with the multiple operational modes.

[0034] Feedback provided via a haptic device is sometimes referred to as vibrotactile feedback or kinesthetic feedback, and is referred to more generally herein as "haptic feedback." Such haptic feedback can be provided, for example, by way of a haptic device or an interface device including a haptic device. Interface devices that provide haptic feedback can provide physical sensations that can be measured by some metric (e.g., perceivable frequency content), and can be felt by a user using a controller or manipulating a physical object of the interface device.

[0035] According to an embodiment of the invention, a haptic device has multiple operational modes. A first operational mode is associated, for example, with a high-frequency range, and a second operational mode is associated, for example, with a low-frequency range control scheme associated with each of the operational modes can be sent to the haptic device; each of the control schemes can cause the haptic device to provide a particular haptic feedback. The control scheme associated with each frequency range can be combined (e.g., superimposed, added, multiplied, convolved, combined by a non-vectored operation, etc.) with one or more remaining control schemes, or otherwise operated on, according to pre-determined rules to provide a transitional response between the frequency ranges. In this manner, an embodiment of the invention provides for a "blending" or "transitioning" of haptic feedback from a low-frequency range to a high-frequency range such that the performance over and between the low- and high-frequency ranges is relatively seamless.

[0036] According to another embodiment of the invention, a haptic device having multiple operational modes is provided. The multiple operational modes of the haptic device include, for example, a low-frequency operational mode, a high-frequency operational mode, and a transitional operational mode, which is associated with frequencies between low frequencies associated with the low-frequency mode and high frequencies associated with the high-frequency mode. The low-frequency operational mode is sometimes referred to herein as "unidirectional" (e.g., unidirectional spinning of a rotational device), and the high-frequency operational mode is sometimes referred to herein as "harmonic" or "oscillating." The transitional operational mode is associated with a transitional frequency range that combines a superposed response of the unidirectional mode and the harmonic mode. The low-frequency operational mode is associated with, for example, frequencies up to approximately 10 Hz, and the high-frequency operational mode is associated with frequencies, for example, above approximately 10 Hz. A transitional frequency range associated with the transitional operational mode includes, for example, frequencies from about 5 Hz to about 25 Hz, where the low-frequency and high-frequency operational modes are associated with frequencies below and above the transitional frequency range, respectively.

[0037] **FIG. 1** is a block diagram of a system having a processor system **10** and an interface device, according to an embodiment of the invention. The system illustrated in **FIG. 1** includes a processor system **10** in communication with an interface device **20**. The processor system **10** can be, for example, a commercially available personal computer or a less complex computing or processing device that is dedicated to performing one or more specific tasks. For example, the processor system **10** can be a terminal dedicated to providing an interactive virtual reality environment, such as a gaming system, or the like.

[0038] The processor system **10** includes a processor **12**, which according to one or more embodiments of the invention, can be a commercially available microprocessor. Alternatively, the processor **12** can be an application-specific integrated circuit (ASIC) or a combination of ASICs, which

is designed to achieve one or more specific functions, or enable one or more specific devices or applications. In yet another alternative, the processor **112** can be an analog or digital circuit, or a combination of multiple circuits.

[**0039**] Alternatively, the processor **12** can optionally include one or more individual sub-processors or coprocessors. For example, the processor can include a graphics coprocessor that is capable of rendering graphics, a controller that is capable of controlling one or more devices, a sensor that is capable of receiving sensory input from one or more sensing devices, and so forth.

[**0040**] The processor system **10** also includes a memory component **14**. As shown in **FIG. 1**, the memory component **14** can include one or more types of memory. For example, the memory component **14** can include a read only memory (ROM) component **14**A and a random access memory (RAM) component **14**B. The memory component **14** can also include other types of memory not illustrated in **FIG. 1** that are suitable for storing data in a form retrievable by the processor **12**. For example, electronically programmable read only memory (EPROM), erasable electrically programmable read only memory (EEPROM), flash memory, as well as other suitable forms of memory can be included within the memory component **14**. The processor system **10** can also include a variety of other components, depending upon the desired functionality of the processor system **10**.

[**0041**] The processor **12** is in communication with the memory component **14**, and can store data in the memory component **14** or retrieve data previously stored in the memory component **14**. The components of the processor system **10** can communicate with devices external to the processor system **10** by way of an input/output (I/O) component **16**. According one or more embodiments of the invention, the I/O component **16** can include a variety of suitable communication interfaces. For example, the I/O component **16** can include, for example, wired connections, such as standard serial ports, parallel ports, universal serial bus (USB) ports, S-video ports, large area network (LAN) ports, small computer system interface (SCSI) ports, audio ports, and so forth. Additionally, the I/O component **16** can include, for example, wireless connections, such as infrared ports, optical ports, Bluetooth wireless ports, wireless LAN ports, or the like.

[**0042**] By way of the I/O component **16**, the processor system **10** can communicate with other devices, such as interface devices **20**. These interface devices **20** can be configured to provide haptic feedback. Each interface device **20** can communicate with the processor system **10** by way of an I/O component **16***a*, which is similar to the I/O component **16** of the processor system **10** and can include any of the wired or wireless communications ports described above in connection with that I/O component **16**. Thus, the communications link between the I/O component **16** of the processor system **10** and the I/O component **16***a* of the interface device **20** can take a variety of forms, including, for example, wired communications links, wireless communications links (e.g., RF links), optical communications links, or other suitable links.

[**0043**] The interface device **20** includes a number of components, such as a processor **22**, a haptic device **24**, and a sensor **26**. As with the components of the processor system **10**, the interface device **20** can include additional components. For example, the interface device can include additional duplicates of the components shown in **FIG. 1** (e.g., the interface device **20** can include multiple processors **22**, haptic devices **24**, sensors **26** and/or controllers **30**, etc.). Additionally, the interface device **20** can include other components not shown in the figure. For example, where it is desirable to store data received by the interface device **20** via I/O component **16***a*, a suitable memory component or buffer memory component can be used. The interface can also include power-sourcing circuitry, an example of which can be seen in U.S. Pat. No. 5,929,607, entitled, "Low Cost Force Feedback Interface with Efficient Power Sourcing," the disclosure of which is incorporated by reference herein in its entirety.

[**0044**] The processor **22** of the interface device **20**, can be similar to the processor **12** of the processor system **10**, described above, or can be specifically designed (e.g., an ASIC) and/or programmed for the functionality of the interface device **20**. As with the processor **12** of the processor system **10**, the processor **22** of the interface device **20**, can include a variety of sub-processors, which can, for example, be used in parallel.

[**0045**] As discussed above, the interface device **20** includes a haptic device **24**, which is used to provide tactile or haptic feedback to a user of the interface device **20**. According to an embodiment of the invention, haptic feedback can be provided by way of a physical object, such as a housing, a manipulandum, or the like. The haptic device **24** can take a variety of forms, including one or more haptic devices that each have multiple operational modes associated with multiple corresponding frequency ranges. Some examples of haptic device **24** configurations that can be used in accordance with one or more embodiments of the invention will be described in greater detail below. The examples of haptic devices **24** given below, however, are not intended to form an exhaustive list of all types of haptic devices **24** that can be included in the interface device **20** but are intended instead as examples only.

[**0046**] The sensor **26** of the interface device **20** is configured to sense input from a user of the interface device **20**. For example, the sensor **26** can be used to sense manipulation or movement of a physical object, such as a manipulandum, of the interface device **20**. The sensor **26** can also be used to sense other forms of user input, such as pressure, speed, acceleration, torque, light, or other measurable quantities. For example, the sensor **26** can incorporate a piezoelectric sensor to sense pressure, an inertial measurement unit (IMU), such as an accelerometer, to sense various forms of motion, a photovoltaic sensor to sense changes in light levels, and/or other sensors. The sensor **26** can also sense other input, such as feedback (e.g., state information including position and/or velocity) from the haptic device **24**, for example.

[**0047**] As shown in **FIG. 1**, the various components of the interface device **20** are in communication with one another and with the components of the processor system **10** (via the I/O components **16**, **16**A). The processor **22** of the interface device **20**, for example, can be used to control the haptic device **24** based on information received from the sensor **26**. Similarly, the processor **12** of the processor system **10** can be used to control the haptic device **24** of the interface device **20** based on information received from the sensor **26**

of the interface device **20**; in such an embodiment, the processor **22** need not be present. Alternatively, the processor **12** of the processor system **10** (also referred to as a "host processor") can be used in concert with the processor **22** of the interface device **20** (also referred to as a "local processor") both to interpret data received from the sensor **26** and to control the haptic device **24**.

[**0048**] The processor system **10** and the interface device **20** can optionally make use of one or more controllers **30***a*, **30***b*, **30***c*, **30***d* (which can be referred to hereinafter as a controller **30**, collectively, individually, or as a subset). As shown in **FIG. 1**, a controller **30** can exist within the processor **12** (e.g., in the form of a control algorithm) of the processor system **10** and/or the processor **22** of the interface device **20**. Additionally, a controller **30** can be a separate component connected to the other components of the processor system **10** and/or the interface device **20** via a bus or other suitable connection. It should be recognized that, according to one or more embodiments, the interface device **20** can function independently of the processor system **10**, as it has its own processor and/or controller **30***c*, **30***d*, and may not require a processor system **10** at all. For example, the interface device **20** can be a stand-alone device such as a personal digital assistant (PDA) or a cellular telephone, which may or may not be configured to connect to a processor system **10**.

[**0049**] **FIG. 2A** is a diagram illustrating a haptic device, a controller, and a sensor, according to an embodiment of the invention. **FIG. 2A** also shows different data values provided to the system. The elements shown in **FIG. 2A** can be used with the processor system **10** and the interface device **20**, or with the interface device **20** alone.

[**0050**] As shown in **FIG. 2A**, user input **28** can optionally be provided (e.g., via the user interface device **20** shown in **FIG. 1**), and received by an optional sensor **26**. The user input **28** can also optionally be provided directly to a controller **30** (e.g., by way of the sensor **26**, or some other devices configured to accept and convey user input). The sensor **26** can also optionally receive information from the haptic device **24**. For example, the sensor **26** can sense the actual movements of the haptic device **24**, thereby sensing the tactile or haptic feedback output by the haptic device **24**.

[**0051**] According to an arrangement of the system shown in **FIG. 2A**, the controller **30** can optionally receive data from the sensor **26**, and can optionally receive user input **28** and control parameters **32**. Based on the any data received from the sensor **26**, any received user input **28**, and/or any received control parameters **32**, the controller **30** controls the tactile output or haptic feedback of the haptic device **24**. For example, the controller **30** (or control algorithm when so implemented) can be used to implement a feedback algorithm, controlling the haptic device **24** based on feedback received from the haptic device **24**. The controller controls the output of the haptic device **24** by a control signal that the controller **30** outputs to the haptic device **24**.

[**0052**] The control signal output by the controller **30** can be based on a number of parameters, including, for example, control parameters **32**. For example, control parameters **32** and other parameters that are used by the controller **30** to control the haptic device **24** can be stored in the memory component **14** of the processor system **10**, or by another suitable memory component (e.g., a memory component of the interface device **20**). According to one or more embodiments of the invention, the control parameters **32** can include input from a portable electronic device and/or a gaming system. For example, the control parameters **32** can include input from a gaming system, a portable gaming device, a cellular telephone, or the like. According to one or more embodiments of the invention, the controller **30** receives control parameters **32** (e.g., gaming device input, cellular telephone input, etc.), and does not include a sensor **26**. According to such embodiments, user input **28** can optionally be received directly by the controller **30**, or can be omitted entirely, depending upon the desired function of the system in which the controller **30** is used.

[**0053**] According to one or more embodiments of the invention, the system shown in **FIG. 2A** can be used in a stand-alone device, such as a cellular telephone, portable electronic device (e.g., a PDA, etc.), or other device. In a cellular telephone embodiment, for example, feedback can be provided in the form of haptic sensations via the haptic device **24** in response to status events (e.g., a message received signal, a network indicator signal, etc.), user input (e.g., mode changes, keypad dialing, option selections, etc.), incoming calls, or other events. Alternatively, the system shown in **FIG. 2A** can be used in a configuration, such as the configuration shown in **FIG. 1**, where an interface device **20** can be connected to a processor system **10**.

[**0054**] **FIG. 2B** is a block diagram of a haptic device **24** shown in **FIGS. 1 and 2**A. As shown in **FIG. 2B**, the haptic device **24** includes an actuator **51**, an elastic member **52** and a mass **53**. The haptic device **24** is configured to provide haptic feedback. The actuator **51** is operably connected to the elastic member **52**, and the elastic member **52** is operably connected to the mass **53**. In operation, the actuator provides force to the elastic member **52**. Some of the force applied to the elastic member **52** is translated to the mass **53**, and causes the mass **53** to move. By causing the mass **53** to move, haptic forces are provided to a user. Note that the configuration shown in **FIG. 2B** is only one example of a configuration of a haptic device **24**. Other configurations that vary from the configuration shown in **FIG. 2B** can be used as the haptic device **24**. For example, the elastic member **52** can be coupled to the mass **53** by a flexible coupling; the elastic member **52** can be coupled to the actuator **51** by a flexible coupling. In alternative embodiment, the elastic member can be coupled between actuator and a mechanical ground, and the actuator can be directed coupled to the actuator.

[**0055**] **FIG. 3A** is a perspective view of a haptic device, according to an embodiment of the invention, and **FIG. 3B** is a cross-sectional view of the haptic device shown in **FIG. 3A**. As shown in **FIGS. 3A and 3B**, the haptic device **100** includes an actuator **110**, an elastic member **120** and a mass **130**. The haptic device **100** is configured to provide haptic feedback. As with the haptic devices described below, the haptic device **100** shown in **FIGS. 3A and 3B** can be used as the haptic device **24** shown in **FIGS. 1 and 2** within an interface device **20**.

[**0056**] The actuator **110** of the haptic device **100** is a rotary actuator and includes a shaft **115**. The elastic member **120** includes a proximate portion **121**, a compliant portion **122** and a distal portion **125**. The proximate portion **121** of the elastic member **120** is coupled to the shaft **115** of the

actuator **110**. The distal portion **125**, which has a width greater than the compliant portion **122**, is coupled to the mass **130**.

[**0057**] The actuator **110** can be any type of rotary actuator such as, for example, a direct current (DC) motor, voice coil actuator or a moving magnet actuator. In addition, actuator **110** can be disposed in and mechanically grounded to a device housing (not shown), such as the interface device **20** described above (e.g., a game controller housing, etc.). Examples of haptic devices disposed in and mechanically grounded to game controller housings are disclosed in U.S. application Ser. No. 09/967,494, filed on Sep. 27, 2001, entitled, "Actuator for Providing Tactile Sensations and Device for Directional Tactile Sensations," and Ser. No. 09/968,725, filed on Sep. 28, 2001, entitled, "Directional Inertial Tactile Feedback Using Rotating Masses," the disclosures of which are incorporated herein by reference.

[**0058**] Although the elastic member **120** is shown as being integrally formed in a unitary construction among the proximate portion **121**, compliant portion **122** and distal portion **125**, other configurations are possible. Where the compliant portion **122** is made of a flexible material, the proximate portion and the distal portion **125** need not be made of flexible materials and need not be integrally formed with the compliant portion **122**. For example, the compliant portion **122** of an elastic member can be coupled to the mass **130** and/or the shaft **115** of the actuator **110** by separate couplings or fasteners. Similarly, the elastic member **120** can be of various types including, for example, leaf springs, helical springs, and so forth.

[**0059**] The actuator **110**, the elastic member **120** and the mass **130** of the haptic device **100** collectively have a first operational mode associated with a range of frequencies and a second operational mode associated with a range of frequencies different from the range of frequencies associated with the first operational mode. For example, the first operational mode can be based on a unidirectional rotation of the mass **130** about the shaft **115** of the actuator **110** (also referred to herein as the "unidirectional mode"); the second mode can be based on a harmonic motion of the mass **130** (also referred to herein as the "harmonic mode"). The range of frequencies associated with the first operational mode can, optionally, overlap with the range of frequencies associated with the second operational mode.

[**0060**] More specifically, the elastic member **120** coupled between the shaft **115** of the actuator **110** and the mass **130** results in a harmonic system. Such a harmonic system exhibits second order behavior with the magnification of vibrations at certain frequencies (e.g., at a resonance frequency of the mechanical system). Here, the haptic device **100** is configured as a harmonic system where the elastic member **120** stores energy and releases it while in the harmonic mode. For example, the compliant portion **122** of the elastic member **120** can store energy during the movement of the mass **130** in response to one polarity of an alternating current (AC) drive signal and can release the energy during the movement of the mass **130** in response to the other polarity of the AC drive signal. This results in harmonic motion and corresponding amplification through broad resonance, which results in high magnitude vibrations and other effects in a power-efficient manner. In addition, complex AC drive signals having many different frequency components can be combined (e.g., superimposed, combined by a vectored or non-vectored operation, etc.) on each other while the haptic device **100** operates in the harmonic mode. The controller **30** described above in connection with **FIG. 2A** provides these complex AC drive signals.

[**0061**] The inventors have recognized that it is advantageous for the damping factor of the mechanical system to be low. This may result in a more efficient harmonic vibration. Consequently, the compliant portion **122** of the elastic member **120** can be made of polypropylene, which exhibits a low damping. Alternatively, the elastic member can be made of steel, wire, plastic or other similar types of materials that can connect the mass **130** in series with the shaft **115** of the actuator **110**.

[**0062**] When operating in the unidirectional mode, the actuator **110** can be driven, for example, with a DC current, thereby causing the mass **130** to rotate about the shaft **115** of the actuator **110** with centripetal acceleration. This centripetal acceleration provides strong inertial forces against the device housing. Firmware or software techniques can be used to control the magnitude of the vibrations while operating in the unidirectional mode. For example, a certain pulse-repetition rate having a 50% duty cycle results in mass **130** rotating unidirectionally at a certain rate with approximately half of the vibration magnitude that would otherwise result from applying a constant voltage (i.e., 100% duty cycle). Although the relationship between the duty cycle and the vibration magnitude may not be linear, it can be approximated as linear over certain operational ranges for the sake of convenience. Further examples of such firmware are disclosed in U.S. application Ser. No. 09/669,029, filed on Sep. 27, 2000, entitled, "Controlling Haptic Sensations for Vibrotactile Feedback," the disclosure of which is incorporated herein by reference.

[**0063**] When the actuator **110** is operated in the harmonic mode, the mass **130** oscillates at or approximately at the frequency of the drive signal (e.g., an AC signal driving the actuator **110**). Such a drive signal can be produced, for example, by an H-bridge circuit or other amplifier. An example of an H-bridge amplifier that can be used to produce such a drive signal is disclosed in U.S. application Ser. No. 10/000,662, filed on Oct. 31, 2001, now U.S. Pat. No. 6,683,437, entitled, "Current Controlled Motor Amplifier System," the disclosure of which is incorporated herein. Using such a signal advantageously involves smaller time delays in starting and stopping movement of the mass **130** and in achieving peak or maximum acceleration than is the case with motion of the mass in the unidirectional mode. Additionally, other techniques may be employed to reduce time delays associated with starting and stopping movement of the mass **130**, as will be described below in greater detail, such as providing a lead-in or ending current pulse as part of a control signal, for example.

[**0064**] **FIG. 4A** is a perspective view of a haptic device, according to another embodiment of the invention, and **FIG. 4B** is a cross-sectional view of the haptic device shown in **FIG. 4A**. Unlike **FIGS. 3A and 3B**, which show an elastic member having a single compliant portion, alternative embodiments having an elastic member with multiple compliant portions are possible, such as the haptic device **200** shown in **FIGS. 4A and 4B**, which has two compliant portions. This haptic device **200** can be used as the haptic

device **24** of the interface device **20** shown in **FIG. 1**. The haptic device **200** includes an actuator **210**, an elastic member **220**, and a mass **230**. The actuator **210**, which is a rotary actuator, includes a shaft **215**. The elastic member **220** includes a proximate portion **221**, multiple compliant portions **222**, **223**, and multiple corresponding distal portions **225**, **226**. The proximate portion **221** of the elastic member **220** is coupled to the shaft **215** of the actuator **210**. The distal portions **225**, **226** each have a width greater than their respective compliant portions **222**, **223** and are coupled to the mass **230**. Although the elastic member **220** shown in **FIGS. 4A and 4B** has two compliant portions **222**, **223**, other embodiments are possible where the elastic member has more than two compliant portions.

[**0065**] Note that the compliant portion(s) of a rotating mass can be compliant in one degree of freedom or axis of travel of the mass, but need not be compliant in the remaining degrees of freedom. For example, the compliant portion **122** shown in **FIGS. 3A and 3B** can be inflexible in the direction parallel to the axis of rotation along the shaft **115** of the actuator **110**. Similarly, the compliant portions **222**, **223** shown in **FIGS. 4A and 4B** can each be inflexible in the direction parallel to the axis of rotation along the shaft **215** of the actuator **210**. As best shown in **4A**, the compliant portions **222**, **223** can be relatively thick along the direction parallel to the shaft **215** of the actuator **210**. Additionally, the elasticity of the various compliant portions can be varied according to torsional or other characteristics.

[**0066**] **FIGS. 5-7** each show a top view of a portion of a haptic device in accordance with other embodiments of the invention. When in operation, the mass(es) for each haptic device rotate(s) about the shaft of the actuator. Each of the portions of haptic devices shown in these figures can be used either in a unidirectional mode, a harmonic mode, or a superposition mode that combines the unidirectional mode and the harmonic mode. Thus, each portion of a haptic device shown in **FIGS. 5-7** has multiple operational modes that can be controlled by way of one or more embodiments of the invention. Each portion of a haptic device shown in **FIGS. 5-7** can also be used as part of the haptic device **24** of **FIG. 1**.

[**0067**] **FIG. 5** shows top view of a portion of a haptic device, according to an embodiment of the invention. The portion **301** of a haptic device in **FIG. 5** includes an elastic member **320**, which is similar to the elastic members **120**, **220**, described above. The elastic member **320** includes a proximate portion **321**, a compliant portion **322**, and a distal portion **325**. The proximate portion **321** is coupled to the shaft **315** of an actuator (not shown). The distal portion **325** is coupled to a mass **330**. It will be appreciated that the mass **330**, although shown as being integrally encapsulated within the distal portion **325**, can also be external to the distal portion **325**, according to one or more embodiments of the invention.

[**0068**] The elastic member **320** shown in **FIG. 5** can be used in a unidirectional operational mode (e.g., by applying a DC or other low-frequency drive signal), or in a harmonic operational mode (e.g., by applying an AC drive signal). Additionally, because the elastic member **320** is asymmetric, it exhibits different characteristics depending on which direction it is rotated. Thus, in addition to potentially exhibiting one of multiple operational modes depending upon the drive signal, different operational modes can be achieved by rotating the elastic member **320** in a different direction. Moreover, portion **301** of the haptic device shown in **FIG. 5** can provide advantageously a variable moment, which substantially decouples the amplitude and the frequency of haptic sensations produced thereby. More specifically, as the velocity with which the portion **301** is rotated increases, the compliant portion **322** flexes, and the radial distance between the mass **330** and the center of rotation (e.g., the shaft **315**) varies. For example, according to an embodiment, the mass **330** moves closer to the shaft **315** as the rotation velocity of the portion **301** increases, thereby changing the moment of the portion **301**.

[**0069**] **FIG. 6** shows a top view of a portion of a haptic device, according to another embodiment of the invention. The portion **401** of the haptic device in **FIG. 6** includes an elastic member **420**, which is similar to the elastic members **120**, **220**, **320**, described above. The elastic member **420** includes a proximate portion **421**, a compliant portion **422**, and a distal portion **425**. The proximate portion **421** is coupled to the shaft **415** of an actuator (not shown). The distal portion **425** is coupled to a mass **430**. It will be appreciated that the mass **430**, although shown as being integrally encapsulated within the distal portion **425**, can also be external to the distal portion **425**, according to one or more embodiments of the invention.

[**0070**] The elastic member **420** shown in **FIG. 6** can be used in a unidirectional operational mode (e.g., by applying a DC or other low-frequency drive signal), or in a harmonic operational mode (e.g., by applying an AC drive signal). Additionally, as with the elastic member **320** shown in **FIG. 5**, the elastic member **420** of **FIG. 6** is asymmetric, and therefore, exhibits different characteristics depending on which direction it is rotated. Thus, in addition to potentially exhibiting one of multiple operational modes depending upon the drive signal, different operational modes can be achieved by rotating the elastic member **420** in a different direction.

[**0071**] **FIG. 7** shows a top view of a portion of a haptic device, according to an embodiment of the invention. The portion **501** of a haptic device in **FIG. 7** includes an elastic member **520**, which is similar to the elastic members **120**, **220**, **320**, **420**, described above. The elastic member **520** includes a proximate portion **521**, two compliant portions **522**, **523**, and two distal portions **525**, **526**. The proximate portion **521** is coupled to the shaft **515** of an actuator (not shown). The distal portions **525**, **526** are coupled to two masses **530**, **532**, respectively. It will be appreciated that the masses **530**, **531**, although shown as being integrally contained within the distal portions **525**, **526**, can also be external to the distal portions **525**, **526**, according to one or more embodiments of the invention.

[**0072**] The elastic member **520** shown in **FIG. 7** can be used in a unidirectional operational mode (e.g., by applying a DC or other low-frequency drive signal), in a harmonic operational mode (e.g., by applying an AC drive signal) or an operation mode being the superposition of the unidirectional mode and the harmonic mode. Additionally, because the elastic member **520** is asymmetric, it exhibits different characteristics depending on which direction it is rotated. This asymmetry of the elastic member **520** can be further accentuated by using differently weighted masses **530**, **531**.

Thus, in addition to potentially exhibiting one of multiple operational modes depending upon the drive signal, different operational modes can be achieved by rotating the elastic member **520** in a different direction.

[**0073**] The portion **501** of the haptic device can also provide a variable moment, which decouples the magnitude and frequency of haptic sensations provided thereby. More specifically, the compliant portions **522**, **523** can be formed in such a way to allow the distance between the masses **530**, **531** to vary as the rotational velocity and/or the direction of rotation of the portion **501** is varied. For example, according to one embodiment of the invention, a compliant member **524** (e.g., a spring) can optionally be connected between the two distal portions **525**, **526**. This additional compliant member **524** (shown in **FIG. 7** by a dashed line) can cause the distal portions **525**, **526** (and the corresponding masses **530**, **531**) to move closer together when the portion **501** is rotated in one direction, causing the portion **501** to exhibit a low-frequency eccentric-mass response. When the portion **501** is rotated in the opposite direction, however, the distal portions **525**, **526** (and the corresponding masses **530**, **531**) move farther apart, causing the portion **501** to exhibit a higher-frequency eccentric-mass response. These two eccentric-mass responses can be used in addition to the unidirectional or harmonic modes described above to control haptic sensations provided by way of a haptic device. Thus, for example, the portion **501** can produce a multi-modal response as well as a variable-moment response.

[**0074**] According to one or more embodiments of the invention, the compliant portions **522**, **523** of the elastic member **520** are different lengths and/or made from different materials. For example, materials having different flexibilities or spring constants can be used to form each of the compliant portions **522**, **523**. Additionally, each of the compliant portions **522**, **523** can be formed to have different harmonic responses. For example, each of the compliant portions **522**, **523** can exhibit harmonic responses to different resonant frequencies or frequency ranges. Additionally, each of the compliant portions **522**, **523** can exhibit different responses in each direction or angle of rotation. Thus, depending upon the specific construction of the elastic member **520**, several harmonic responses and/or several operational modes of the elastic member **520** can be obtained.

[**0075**] According to an embodiment of the invention, a haptic device, such as the haptic device **24** shown in **FIG. 1**, for example, includes a variable-stiffness compliant portion of a compliant member. If the spring constant (K) value of a compliant portion of an elastic member can be varied as a function of drive frequency, then the haptic device can operate near a peak magnitude and efficiency across a relatively wide range of frequencies. A mechanical actuator can be, for example, a piezoelectric structure (e.g., a piezoelectric buzzer). Such a piezoelectric structure can include, for example, a ceramic on a mass where an applied voltage causes movement of the ceramic. Through proper selection of the applied voltage, the ceramic can behave in a manner similar to a spring. The piezoelectric structure can change its spring constant as a function of bias voltage. Consequently, a frequency-to-voltage converter driving the piezoelectric structure can maintain a resonance frequency of haptic device by adjusting the spring constant.

[**0076**] The behavior of an embodiment of the haptic device having a unidirectional mode and a harmonic mode (e.g., the haptic device **100** shown in **FIGS. 3A and 3B**, the haptic device **200** shown in **FIGS. 4A and 4B**, and haptic devices using the rotating masses shown in **FIGS. 5-7**) can be modeled. Such a model can be based on various factors such as, for example, the mass shape and weight distribution, and the stiffness of the compliant portion of the elastic member. The following provides a dynamics model of an embodiment of the haptic device having a unidirectional mode and a harmonic mode.

[**0077**] Equation 1 below is based on a second order Laplace transform function, and can be used to model the harmonic mode of a haptic device, such as the haptic devices discussed above, for example, which are capable of using a rotating mass.

$$\frac{X}{T_m} = \frac{1}{r(ms^2 + bs + k)} \tag{1}$$

[**0078**] In Equation 1 above, X is displacement of the mass of a haptic device, T_m is the torque of an actuator driving the haptic device (e.g., a motor), m is the weight of the mass, r is the eccentricity radius, k is the spring constant, b is the damping constant, and s is the Laplace variable. The eccentricity radius r is the distance from center of an actuator shaft to "center of mass" of the mass being driven by the actuator of the haptic device.

[**0079**] Equation 2, shown below, can be used to model the unidirectional mode of a haptic device, such as the haptic devices discussed above, for example, which are capable of using a rotating mass.

$$F = r\omega^2 m \tag{2}$$

[**0080**] In Equation 2 above, F is the force, w is the angular velocity of the mass of the haptic device (e.g., $2\pi f$, where f is the frequency of the mass of the haptic device).

[**0081**] Equation 3 below shows a damping ratio d that can be used to model damping of a haptic device, such as the haptic devices discussed above, for example, which are capable of using a rotating mass.

$$d = \frac{b}{2\sqrt{k}} \tag{3}$$

[**0082**] In Equation 3 above, d is the damping ratio that relates the damping constant b to the spring constant k.

[**0083**] The dynamics model defined above in connection with Equations 1-3 can be used to design a haptic device having a harmonic mode. For example, the specific values of the damping ratio d, the spring constant k, the weight of the mass m, and the eccentricity radius r can be selected to achieve a particular behavior of a haptic device. Ways in which the dynamics model, defined above using Equations 1-3 can be used to achieve a particular behavior of a haptic device is described in greater detail in U.S. application Ser. No. 10/301,809, filed on Nov. 22, 2002, entitled, "Haptic Feedback Using Rotary Harmonic Moving Mass," incorporated by reference above.

[0084] As described above, a multi-mode haptic device is capable of providing effects using both a unidirectional operational mode and a harmonic operational mode. According to one or more embodiments of the invention, the unidirectional operational mode provides strong, attention-getting signals y, and the harmonic operational mode, on the other hand, is used to convey subtler sensations than those generally associated with the unidirectional operational mode. In addition to a DC signal, one or more embodiments of the invention can use a low frequency AC signal can drive a haptic device in the unidirectional operational mode because it has non-zero values for sufficiently long periods of time.

[0085] **FIG. 8** is a plot showing an acceleration-versus-time response of a haptic device, according to an embodiment of the invention. The response shown in **FIG. 8** is a low-frequency rumble response obtained by applying a DC drive signal to the haptic device. Or, in other words, the response shown in **FIG. 8** is the response of a haptic device being driven in a unidirectional operational mode.

[0086] **FIG. 9** is a plot showing an acceleration-versus-time response of a haptic device, according to an embodiment of the invention. The response shown in **FIG. 9** is obtained by applying an AC drive signal in the form of a periodic square wave having a frequency of approximately 30 Hz. The magnitude and frequency of the response can be decoupled and can be independently varied as will be described in greater detail below. The response shown in **FIG. 9** can, for example, result from direction reversals caused by the applied periodic square-wave or rectangular-wave signal. According to one or more embodiments of the invention, any physical compliance of the haptic device can cause a recoil, which can contribute to the response shown in **FIG. 9**, increasing the size of the acceleration peaks. As discussed above, for rotating masses in an asymmetric device, the compliance may change the moment of the device depending upon the direction the device is rotated.

[0087] **FIG. 10** is a plot showing an example of drive-signal frequency ranges of a multi-mode haptic device, according to an embodiment of the invention. More specifically, the frequency ranges shown in **FIG. 10** are ranges of drive-signal frequencies used to drive a bi-modal haptic device having a first mode that corresponds to the low-frequency range and a second mode that corresponds to a high-frequency range. The principles shown in the plot of **FIG. 10** can be generalized, however, to multi-modal haptic devices having more that two modes, which would have similar, multiple frequency ranges corresponding to each of the device's multiple modes, and a transitional frequency range between each of those multiple frequency ranges.

[0088] In the example shown in **FIG. 10**, a low-frequency response is caused by drive signals within the low-frequency range, which can extend, for example, from approximately DC (i.e., 0 Hz) to a low-frequency limit f_{low} of approximately 5 Hz. A transitional frequency response is caused by drive signals within the transitional-frequency range, which can extend, for example, from the low-frequency limit f_{low} to a high-frequency limit f_{high} of approximately 25 Hz. A high-frequency response is caused by drive signals within the high-frequency range, which can extend, for example, from the high-frequency limit f_{high} to all higher frequencies (e.g., all frequencies capable of being output by the device). A resonant-frequency f_{res} response, which depends upon the physical characteristics of the haptic device, is achieved by a drive signal having a frequency located in this example within the high-frequency range. For example, the resonant-frequency f_{res} response can be achieved by using drive signals having frequencies between about 60 Hz-200 Hz. The drive signals used to achieve this resonant-frequency f_{res} response can vary according to design constraints and desired performance of the haptic device.

[0089] The high end of the unidirectional operational mode of the device is dependent upon characteristics of the actuator used. Thus, the exact frequency where the haptic device ceases to operate in the unidirectional operational mode and begins to operate in the harmonic operational mode can vary from device to device. Accordingly, the transitional frequency range is designed to include frequencies of drive signals at which most actuators transition from operating in a unidirectional operational mode, to operating in a harmonic mode. Thus, the low-frequency range shown in **FIG. 10** includes frequencies of drive signals that can cause some haptic devices to operate in the unidirectional operational mode, and the high-frequency range includes frequencies of drive signals that can cause these haptic devices to operate in the harmonic operational mode. Drive signals with frequencies located within the transitional frequency range can be used to provide smooth transitions from a low-frequency, unidirectional operational mode to a high-frequency, harmonic operational mode.

[0090] **FIGS. 11A-11G** are plots showing examples of signals used to drive a haptic device, according to an embodiment of the invention. The signals shown in **FIGS. 11A-11G** are low-frequency signals used to drive a haptic device within the low-frequency range shown in **FIG. 10**. These signals are used to convey a strong sensation and a clear beat pattern of the output feedback (i.e., the periodicity of the output feedback) to a user of an interface device, such as the interface device **20** shown in **FIG. 1**. The signals shown in **FIGS. 11A-11G** have a period T defined by the relation shown in Equation 4 below.

$$T = \frac{1}{f_{desired}} \tag{4}$$

[0091] In Equation 4 above, the desired frequency $f_{desired}$ can be selected based upon the desired performance of the haptic device to which the drive signal is being applied.

[0092] According to one or more embodiments of the invention, the desired frequency $f_{desired}$ of the drive signal is equal to the resonant frequency f_{res} of the haptic device to which the signal is being applied. When the resonant frequency f_{res} is used to drive an actuator (e.g., by applying the resonant frequency f_{res} directly, or by applying bursts of the resonant frequency f_{res}), acceleration of the mass is maximized, and a low frequency response is emulated. The frequency of a signal, such as a square wave, can be varied to change a user's perception of a frequency of a haptic effect. The duty cycle can be varied to change a user's perception of a magnitude of a haptic effect.

[0093] **FIGS. 11A-11D** are forms of rectangular waves. **FIG. 11A** is a positive pulse; **FIG. 11B** is a bipolar pulse;

FIG. 11C is a bipolar pulse with inverting polarity; and **FIG. 11D** is a positive and negative pulse. **FIG. 11E** is a resonant sine pulse and **FIG. 11F** is a sine pulse train. **FIG. 11G** is a square pulse train.

[**0094**] In accordance with one or more embodiments of the invention, various duty-cycle-driven control methods for controlling a multi-mode haptic device can be used to determine drive frequencies appropriate for emulating low-frequency haptic feedback responses. Such a duty-cycle-driven control method that can be used in accordance with one or more embodiments of the invention is described in U.S. application Ser. No. 09/669,029, filed on Sep. 27, 2000, entitled, "Controlling Haptic Sensations for Vibrotactile Feedback," and Ser. No. 09/675,995, filed on September 29, now U.S. Pat. No. 6,680,729, entitled, "Increasing Force Transmissiblity for Tactile Feedback Interface Devices," the disclosures of which are incorporated by reference.

[**0095**] According to an embodiment of the invention, a duty-cycle-driven control method can be used to divide a frequency range of a haptic device into two portions: a low-frequency range and a high-frequency range. The actuator of the haptic device can be driven using, for example, the maximum available current and/or voltage. According to one or more embodiments of the invention, a duty-cycle-driven control method operates in the unidirectional operational mode. The magnitude of the periodic haptic feedback is determined by varying the "on-time" of the driving signal's duty cycle.

[**0096**] According to another embodiment of the invention, using a duty-cycle-driven control method, low-frequency haptic feedback, which is the rumble response shown in **FIG. 8**, can be achieved using a drive signal that has a frequency outside the low-frequency range shown in **FIG. 10**. The "on-time" t_{on} of the driving signal, according to this embodiment, is long enough such that the desired haptic feedback is produced. The maximum magnitude M of the haptic feedback is accomplished by a drive signal with the maximum on-time t_{onmax}. Other magnitudes m of the haptic feedback, which are less than the maximum magnitude M, can be achieved by using an on-time t_{on} that is less than the maximum on-time t_{onmax}, and which is defined in the manner shown below in Equation 5.

$$t_{on} = \frac{m}{M} t_{on\,\max} \tag{5}$$

[**0097**] According to another embodiment of the invention using a duty-cycle-driven control method, high-frequency haptic feedback can be achieved using an on-time $t_{on,}$ which is a percentage P of the desired period T. Thus, according to this embodiment, the maximum magnitude M for the high-frequency haptic feedback is achieved for an on-time ton that is 100-percent of a specific or desired period T. Other magnitudes m of the haptic feedback, which are less than the maximum magnitude M can be calculated in the manner shown below in Equation 6.

$$t_{on} = \frac{mP}{100M} T \tag{6}$$

[**0098**] **FIGS. 12A-12C** are plots showing examples of signals used to drive a haptic device, according to an embodiment of the invention. The drive signals shown in **FIGS. 12A-12C** have frequencies of approximately 20 Hz to 30 Hz. The signal shown in **FIG. 12A**, for example, is an example of a unipolar pulse appropriate for operation in the unidirectional operational mode. The signal of **FIG. 12B** is an example of a bipolar pulse with a 50-percent duty cycle appropriate for high-frequency operation, or operation in the harmonic operational mode. The signal of **FIG. 12C** is an example of a bipolar pulse with a non-fifty-percent duty cycle appropriate for operation in the high-low transition area shown in **FIG. 10**. The small negative pulse of the signal shown in **FIG. 12C** can be used to stop the motion of the previous period.

[**0099**] According to one or more embodiments of the invention, the drive signals shown in **FIGS. 12A-12C** can be used to provide a substantially smooth transitional frequency range from the low-frequency range to the high-frequency range (see, e.g., the transitional frequency range from 5 Hz to 25 Hz shown in **FIG. 10**). As a drive signal transitions from a low-frequency signal to a high-frequency signal, the positive pulse of a bipolar signal (e.g., the non-zero-mean bipolar-pulse signal shown in **FIG. 12C**) is reduced gradually until it becomes a zero-mean bipolar-pulse signal (e.g., as shown in **FIG. 12B**) causing a haptic device to operate in the high-frequency range.

[**0100**] Because the magnitude of the step size from the negative part of the signal to the positive part of the signal in **FIGS. 12B and 12C** is larger than change from zero to the positive part of the signal, it creates a larger perceived haptic effect magnitude. Power is better conserved, however, by not having a negative on-time, as in **FIG. 12A**. Thus, where power conservation is more important, the drive signal using a unipolar pulse (e.g., the drive signal shown in **FIG. 12A**) can be used, and where a larger haptic magnitude is required, a bipolar pulse (e.g., the drive signals shown in **FIGS. 12B and 12C**) can be used.

[**0101**] **FIGS. 13A-13E** are plots showing examples of signals used to drive a haptic device, according to another embodiment of the invention. Generally speaking, the signals shown in **FIGS. 13B, 13C**, and **13**E create a beat pattern easily identifiable by a user because the transients of the signal are perceived as a single pulse (e.g., a burst pulse). The signals shown in **FIGS. 13A and 13D** produce a larger perceived magnitude than the signals of **FIGS. 13B, 13C**, and **13**E, but do not produce a beat pattern as clear as the signals of those Figures in part because of transients associated with those signals. Thus, as demonstrated by the perceived haptic feedback caused by the drive signals of **FIGS. 13A-13E**, there is a trade-off between perceived strength and perceived beat pattern.

[**0102**] Drive signals providing haptic feedback within the transitional frequency range (see, e.g., **FIG. 10**) are dependent on the profiles chosen in both the low-frequency and high-frequency ranges of a haptic device. Specifically, to

provide a substantially smooth transition between frequency ranges and consistency of magnitudes over an extended frequency spectrum, the proper drive signals within the low-high transition range can be selected, such that the perceived haptic effect in this area appears to be "blended."

[0103] One technique of combining, or "blending," drive signals for a smooth response transition within the transitional frequency range, according to an embodiment of the invention, is to use a resonant pulse, while varying the desired frequency. The signal shown in **FIG. 14** is a series of resonant pulses that can be used to generate drive signals having frequencies over the entire functioning frequency range of a haptic device, according to an embodiment of the invention. Drive signals in the low-frequency range can use pulses at a resonant frequency f_{res} spaced at periods T determined by substituting the resonant frequency f_{res} for the desired frequency $f_{desired}$ in Equation 4. This provides a consistent perceived magnitude and frequency pattern over the whole functioning frequency range.

[0104] Another technique of blending drive signals for a smooth response transition within the transitional frequency range, according to a embodiment of the invention, is to use a resonant pulse converted to a zero-mean bipolar-pulse periodic signal. Such a signal can be used to provide haptic feedback within the transitional frequency range. The transition drive signal having a zero-mean bipolar-pulse can be derived using a magnitude conversion, a frequency conversion, or duty-cycle-driven control method, among other techniques.

[0105] **FIG. 15** shows a system **600** for performing magnitude conversion of drive signals according to an embodiment of the invention. A resonant pulse drive signal generator **602** and a bipolar-pulse drive signal generator **604** (e.g., a fifty-percent duty-cycle drive signal generator) produce respective signals computed for the period T in the manner shown in Equation 4. The drive signal produced by each drive signal generator **602**, **604** is with a corresponding pre-determined weighting filter **606**, **608**, by a corresponding multiplier **610***a*, **610***b* in the frequency domain. The resulting products are summed by a summer **612** to produce a desired periodic profile **614** for the desired frequency $f_{desired}$.

[0106] In other words, the resonant pulse generated by the resonant pulse generator **602** is multiplied in the frequency domain by a first weighting filter **606**, which is essentially a low-pass filter. The bipolar-pulse drive signal generated by the bipolar-pulse drive signal generator **604** is multiplied in the frequency domain by a second weighting filter, which is essentially a high-pass filter. Hence, in the resulting signal having the desired periodic profile **614**, as can be seen in the frequency profiles of the first weighting filter **606** and the second weighting filter **608**, for frequencies from zero to the low-frequency limit f_{low} shown in **FIG. 10**, the weight of the resonant pulse is one, and the weight of the bipolar-pulse periodic drive signal is zero, respectively. Conversely, at frequencies from the high-frequency limit f_{high} and above, the weight of the resonant pulse is zero and the weight of the bipolar-pulse periodic drive signal is one. In the transitional frequency range shown in **FIG. 10**, the resonant pulse signal and the bipolar-pulse drive signal are combined in such a manner that the weight of the resonant pulse signal decreases and the weight of the bipolar-pulse drive signal increases, with increased frequency within the transitional frequency range. The resulting desired periodic profile **614** provides a haptic feedback having a well-defined pattern that is "blended" across an extended frequency range.

[0107] Another technique for blending haptic feedback responses from the various frequency ranges shown in **FIG. 10**, according to another embodiment of the invention, is to perform a frequency conversion. A frequency conversion can be used to smoothly convert a low-frequency periodic drive signal that uses a resonant pulse drive signal into a high-frequency periodic signal. This technique modifies the frequency of the pulse drive signal used in the low-frequency range until the drive signal is converted to a zero-mean bipolar-pulse (e.g., a fifty-percent duty-cycle periodic signal) at the high-frequency range, similar to the manner discussed above in connection with the transitional-frequency-range drive signal shown in **FIG. 12C**.

[0108] Equations 7, 8, and 9 refer to an embodiment where the frequency of the pulse f_{pulse} generates haptic feedback that provides a user with a perception of a periodic signal at a desired frequency $f_{desired}$ with a particular magnitude m within the frequencies of the transitional frequency range shown in **FIG. 10**.

$$m = \frac{f_{res} - f_{high}}{f_{low} - f_{high}} \tag{7}$$

$$b = f_{res} - m \cdot f_{low} \tag{8}$$

$$f_{pulse} = m \cdot f_{desired} + b \tag{9}$$

[0109] In Equations 7, 8, and 9 above, m is the perceived magnitude of the haptic feedback, f_{low} is the low-frequency limit, f_{high} is the high-frequency limit, f_{res} is the resonant frequency of the haptic device, and b is the damping constant.

[0110] Using Equations 7, 8, and 9 above, the pulse frequency f_{pulse} required to provide a desired frequency $f_{desired}$ haptic output to a user can be readily determined. For example, if a haptic device has a resonant frequency f_{res} of 200 Hz, and the low-frequency limit f_{low} is 5 Hz and the high-frequency limit f_{high} is 25 Hz, the pulse frequencies f_{pulse}, required to achieve the perception of the corresponding desired frequencies $f_{desired}$ are shown in Table 1 below.

TABLE 1

Desired frequency $f_{desired}$	Pulse frequency f_{pulse}
5	200
7	182.5
10	156.25
12	138.75
15	112.5
17	95
20	68.75
22	51.25
25	25

[0111] Using a frequency conversion technique, such as the technique described above, the perceived periodicity of haptic feedback experienced by a user is constant over all

frequencies, including those within the transitional frequency range. More specifically, such a frequency conversion technique provides smooth "blending" of or transitioning between effects in the unidirectional operational mode associated with the low-frequency range and the harmonic operational mode associated with the high-frequency range. Additionally, using this frequency conversion technique, the magnitude of the pulse, which can be determined according to Equation 7, is preserved throughout the transition area, thereby providing haptic feedback having a consistent perceived magnitude to a user.

[0112] A duty-cycle-driven control method can also be used to convert low-frequency signals to a zero-mean bipolar-pulse (e.g., a fifty-percent duty-cycle periodic signal) at the high-frequency range, according to another embodiment of the invention. Such duty-cycle-driven control method can be used, for example, with drive signals, such as the drive signal shown in **FIG. 12C**. The duty-cycle-driven control method can be used to determine on-time t_{on} in the same manner determined in both the low-frequency range and the high-frequency range, as explained above in connection with Equations 5 and 6, for example. As described above, the negative signal values serve as a brake pulse, or in other words, stops the motion associated with the previous pulse. Additionally, as described above, the negative on-time creates a large transition between positive and negative acceleration (i.e., between the positive portion of the signal and the negative portion of the signal), which results in a higher acceleration profile and a higher perceived force magnitude. The duty-cycle-driven control method achieves relatively effective periodicity, and increases the strength of the perceived haptic feedback. The duty-cycle-driven control method also provides a smooth perceived transition between all three frequency ranges shown in **FIG. 10**.

[0113] According to one or more embodiments of the invention, periodic haptic responses in the high-frequency range can be created using one of two techniques. For example, according to an embodiment of the invention, a high-frequency periodic response can be created using a zero-mean bipolar-pulse drive signal, as shown in **FIG. 12B**. According to another embodiment of the invention, a high-frequency periodic response can be created using a single resonant pulse every period, as shown in **FIGS. 11A and 11B**, for example. Around the resonant frequency f_{res}, the two techniques produce similar periods and magnitudes. Below the resonant frequency f_{res}, however, the zero-mean bipolar-pulse drive signal technique generally produces a perceived higher haptic feedback magnitude.

[0114] According to one or more embodiments of the invention, three distinct drive signals can be provided for haptic responses within each of the three frequency ranges shown in **FIG. 10**. For haptic feedback within the low-frequency range, a rectangular-wave signal can be provided. For haptic feedback within the transitional frequency range, an duty-cycle-driven control method can be used to determine the appropriate drive signal to be applied. For haptic feedback within the high-frequency range, a zero-mean bipolar-pulse drive signal can be used.

[0115] **FIG. 16** is a plot showing an example of a signal used to drive a haptic device, according to an embodiment of the invention. The rectangular-wave signal shown in **FIG. 16** is used to provide haptic responses within the low-frequency range shown in **FIG. 10**. The period T of the signal is determined by using the desired output frequency $f_{desired}$, as shown in Equation 4 above. The on-time t_{on} can be calculated using Equations 5 and 6 above. As explained above in connection with those equations, the maximum on-time t_{onmax} corresponds to the maximum magnitude M of the haptic feedback perceived by the user. For such an embodiment, for example, the maximum on-time t_{onmax} is about two or three periods of the drive signal (e.g., two or three rotations of a rotating mass of a haptic device). According to an embodiment of the invention, the maximum on-time t_{onmax} is approximately 80 milliseconds. This time can vary greatly, however, as it is dependent of the devices used, such as the actuator, mass, and other parameters. The maximum on-time t_{onmax} can be a parameter stored in memory (e.g., in firmware or software, etc.) such that an interface device **20** can make use of a variety of haptic devices **24**, each of which can have a different set of parameters including a maximum on-time t_{onmax}.

[0116] According to another embodiment of the invention, a drive signal supplied within the low-frequency range makes use of only unipolar pulses (i.e., positive-only or negative-only pulses), such as the unipolar pulse signal shown in **FIG. 16**, for example, to conserve energy, making the haptic device more power efficient. According to yet another embodiment of the invention, however, bipolar pulses (i.e., pulses having both negative and positive components) can be used to provide a response having a better defined periodicity because a negative pulse has the effect of stopping an effect from a previous positive pulse and vice versa.

[0117] **FIG. 17** is a plot showing an example of a signal used to drive a haptic device, according to an embodiment of the invention. The drive signal shown in **FIG. 17** is used to provide haptic sensations within the transitional frequency range, and is calculated using a duty-cycle-driven control method, such as the ones described above in connection with Equations 5 and 6. The drive signal in **FIG. 17** is bi-directional, which provides a large transition from the negative portions of the signal to the positive portions of the signal. This bi-directional nature of the drive signal produces a larger perceived magnitude of the haptic effect generated. The bi-directional nature of the drive signal shown in **FIG. 17** also stops motion generated from a previous pulse (i.e., it has a "braking" effect).

[0118] The period T of the drive signal shown in **FIG. 17** is calculated as described above in connection with Equation 4, using the desired frequency $f_{desired}$. As explained above in connection with Equations 4, 5, and 6, the maximum on-time t_{onmax} corresponds to the maximum magnitude M of the haptic feedback generated. In one embodiment, the short negative pulse preceding each positive on-time t_{on} is relatively short compared to the positive on-time t_{on}, and has the effect of stopping the motion associated with the previous on-time t_{on}, but is not perceived by a user (except as a transient artifact of the feedback). For example, the duration of the negative pulse can be approximately 10 ms.

[0119] The duty cycle of the drive signal can steadily increase as the haptic feedback transitions from the transitional frequency range to the high-frequency range shown in **FIG. 10**. A drive signal having a duty cycle of fifty percent can used in the high-frequency range shown in **FIG. 10**, such as the drive signal shown in **FIG. 12B**, for example.

[0120] Rectangular-wave drive signals (including, e.g., square-wave drive signals), such as those described above, are frequently used to convey a strong periodic haptic sensation to a user. These types of sensations conveyed by the rectangular-wave drive signals are sometimes referred to as "square-like" sensations. These square-like sensations, however, are not the only type of sensations desired for haptic feedback. For example, when a haptic device is being driven in the harmonic operational mode, or within the high-frequency range, it may be advantageous to use other drive signal forms because the high-frequency components of such drive signals can be felt and distinguished by users of a haptic device. Some examples of drive signal shapes that can be used to drive a haptic device in harmonic operational mode to produce different haptic sensations than those experienced with a square-wave drive signal including, for example, a saw-like wave, a sinusoid, or the like.

[0121] **FIGS. 18A-18C** are plots showing examples of signals used to drive a haptic device, according to one or more embodiments of the invention. The drive signal shown in **FIG. 18A** is a square wave similar to the transitional frequency range drive signal shown in **FIGS. 17 and 12**C. The drive signals shown in **FIGS. 18B and 18C** are saw-like and sinusoidal waves, respectively. All of the drive signals shown in **FIGS. 18A-18C** are configured with varying duty cycles using similar techniques to those described above in connection with **FIGS. 17 and 12**C with similar effects. Specifically, the drive signals shown in **FIGS. 18A-18C** have a short negative pulse prior to the on-time of each drive signal. This short pulse accomplishes a large initial transition, perceived by a user as a larger magnitude of the haptic feedback, and helps stop or slow down motion of a haptic device from the prior on-time signal (i.e., performs a "braking" function).

[0122] In addition to shaping drive signals used to drive haptic devices capable of providing multiple operational modes (e.g., unidirectional, harmonic, etc.), other techniques of controlling haptic devices are possible. For example, whether a haptic device is acting in a unidirectional or harmonic operational mode, a fast response time that exhibits no perceived lag to a user may be desired. Force applied to a haptic device (e.g., by way of an applied voltage signal), however, sometimes results in a start-up lag that may be detectable by a user. Such start-up lags can detract from the user's haptic experience for some applications.

[0123] The force F applied to a haptic device, such as the haptic device **24** shown in **FIG. 1**, by a haptic device having rotating mass (e.g., a haptic device having an eccentric rotating mass operating in a unidirectional operational mode or a haptic device having a harmonic eccentric rotating mass operating in a unidirectional operational mode) is directly proportional to the square of the angular velocity ω. This force F can be calculated as shown below in Equation 10.

$$F=\epsilon_r\cdot\omega^2 \tag{10}$$

[0124] In Equation 10 above, ϵ_r is dependent on the size and shape of the rotating mass (i.e., it is dependent on the moment of inertia of the mass). This force F can only be detected by a user above a certain threshold of angular velocity ω. Thus, delays in ramping up the angular velocity ω of the rotating mass result in a delay of the haptic feedback felt by the user. For example, in gaming applications, where the haptic device **24** of the user device **20** uses a large rotating mass, this delay can be as long as approximately 60 ms. Such a significant delay can be felt by a user, and detracts from the haptic sensation experienced by the user. Thus, in some embodiments, decreasing the delay to synchronize the visual display of a haptic feedback triggering event with the corresponding haptic feedback is highly desirable in all operational modes, including, for example, the operational modes corresponding to the three frequency ranges shown in **FIG. 10**.

[0125] **FIG. 19A** is a plot showing an example of a regular-step drive signal **702***a* used to drive a haptic device. According to one or more embodiments of the invention, this regular-step drive signal **702***a* can be referred to as a steady-state signal, or a signal configured to provide steady-state power to a haptic device. Time is shown in milliseconds on the horizontal axis, and relative velocity (of the haptic device) is shown on the vertical axis (which is similarly the case for the remaining figures). The velocity **704***a* of the haptic device that results from the regular-step drive signal **702***a* is also shown on the same plot as a curve. As can be seen in **FIG. 19A**, a delay occurs between the initiation of the regular-step drive signal **702***a* and the achievement of full velocity **704***a* (i.e., the steady-state velocity) of the haptic device. In some circumstances, this delay can be perceived by a user, which may be undesirable in certain applications.

[0126] **FIG. 19B** is a plot showing an example of a signal **702***b* used to drive a haptic device, according to an embodiment of the invention. The lead-in-pulse drive signal **702***b* shown in **FIG. 19B** incorporates a lead-in pulse, and can be used to provide a haptic sensation without a lag time associated with a regular-step drive signal (e.g., the regular-step drive signal **702***a* shown in **FIG. 19A**). In other words, the lead-in-pulse drive signal causes an improved velocity **704***b*, or reduced response time, of the haptic device as shown in **FIG. 19B**. The lead-in-pulse drive signal **702***b* begins with a pulse configured to accelerate the haptic device to full velocity quicker than the regular-step drive signal **702***a* shown in **FIG. 19A**. According to an embodiment of the invention, the lead-in pulse of the lead-in-pulse drive signal **702***b* can be provided by quickly discharging a capacitor when required. Such a capacitor can be trickle charged, for example, so that it is capable of providing the lead-in pulse when it is required.

[0127] In addition to delays associated with initiating tactile forces (e.g., haptic feedback), delays also sometimes exist during termination of such tactile forces (e.g., haptic feedback). For example, because of momentum gained by a rotating mass or other haptic device, termination of a drive signal does not immediately terminate the motion of the device. This response-time lag can be detected by users, which may be undesirable in certain applications. The response-time lag is more pronounced in some applications, such as some video gaming applications that use heavier rotating masses, or other haptic devices having large moments of inertia.

[0128] **FIG. 20A** is a plot showing an example of a regular-step drive signal **802***a* used to drive a haptic device. The plot in **FIG. 20A** shows the regular-step drive signal **802***a*, ends as a step function, thereby terminating steady-state power to the haptic device. As can be seen by the resultant stopping velocity **804***a* shown in **FIG. 20A**, a delay

occurs in stopping the haptic device, which can be perceived, in some circumstances, by a user. Such a delay may be undesirable in certain applications.

[0129] **FIG. 20B** is a plot showing an example of a signal **802***b* used to drive a haptic device, according to an embodiment of the invention. The brake-pulse drive signal **802***b* used in **FIG. 20B** includes a portion having a negative pulse prior to a potion of the drive signal **802***b* having zero power. This negative pulse (also referred to as a brake or braking pulse) results in the improved velocity **804***b* shown in **FIG. 20B**, which has improved stopping characteristics compared to devices using a regular-step drive signal **802***a* (shown in **FIG. 20A**). Specifically, the brake-pulse drive signal **802***b* stops a rotating mass or other haptic device more quickly than with a regular step drive signal **802***a*. As with the lead-in-step drive signal **702***b* (shown in **FIG. 19B**), the brake-pulse drive signal **802***b* can be produced, for example, by discharging a previously charged capacitor.

[0130] Drive signals implementing the lead-in pulse and of the lead-in-pulse drive signal **702***b*, and the negative pulse of the brake-pulse drive signal **802***b* can be combined to provide haptic feedback having a reduced lag time (i.e., a reduced response time) at both the beginning and end of the feedback. The drive signals described above in connection with **FIGS. 19B and 20B** can be created via computer programming code that can be programmed in software, firmware, or hardware, according to the desired performance and/or design constraints of the system.

[0131] The effects described above in connection with **FIGS. 19B and 20B** can be implemented in any of the operational modes (e.g., unidirectional, harmonic, transitional, etc.) associated with the invention. Additionally, these effects can be implemented within all of the frequency ranges shown in **FIG. 10** to provide quicker response within each of these ranges.

[0132] From the foregoing, it can be seen that systems and methods for controlling multi-mode haptic devices are discussed. Specific embodiments have been described above in connection with a multi-mode haptic device that has multiple operational modes (e.g., unidirectional, harmonic, etc.), and which operates within multiple frequency ranges including: a low-frequency range, a low-high transition range, and a high-frequency range. Additionally, specific embodiments have been described in the context of haptic devices using rotating masses to produce haptic feedback.

[0133] It will be appreciated, however, that embodiments of the invention can be in other specific forms without departing from the spirit or essential characteristics thereof. For example, while some embodiments have been described in the context of a multi-mode haptic device operating within three frequency ranges, a multi-mode haptic device can have multiple operational modes that span multiple frequency ranges in excess of the three discussed above. For example, such a haptic device could operate within multiple frequency ranges corresponding to multiple harmonics of the device. These multiple frequency ranges can have multiple transition frequency ranges therebetween. Additionally, other types of actuators, spring-mass systems, and feedback devices can be used to provide haptic device according to the principles of the invention disclosed above. The presently disclosed embodiments are, therefore, considered in all respects to be illustrative and not restrictive.

What is claimed is:

1. An apparatus, comprising:

a haptic device having a plurality of operational modes including a first operational mode and a second operational mode, the first operational mode being associated with a frequency range, the second operational mode being associated with a frequency range being different from the frequency range of the first operational mode; and

a controller coupled to the haptic device, the controller configured to send the haptic device a plurality of control schemes each being uniquely associated with an operational mode from the plurality of operational modes.

2. The apparatus of claim 1, wherein the controller is configured to combine each control scheme from the plurality of control schemes prior to sending the plurality of control schemes to the haptic device.

3. The apparatus of claim 1, wherein the controller is configured to superimpose each control scheme from the plurality of control schemes prior to sending the plurality of control schemes to the haptic device, the plurality of control schemes being superimposed according to a predetermined proportion of operational modes from the plurality of operational modes.

4. The apparatus of claim 1, wherein the controller is configured to provide transitional control schemes associated with at least two operational modes from the plurality of operational modes, the transitional control schemes are configured to combine at least a portion of each control scheme from the plurality of control schemes uniquely associated with each of the at least two operational modes.

5. The apparatus of claim 1, wherein the controller is configured to provide transitional control schemes associated with at least two operational modes from the plurality of operational modes, the transitional control schemes are configured to superimpose at least a portion of each control scheme from the plurality of control schemes uniquely associated with each of the at least two operational modes.

6. The apparatus of claim 1, wherein the haptic device includes a rotating mass.

7. The apparatus of claim 1, wherein the haptic device includes a rotating mass, the rotating mass having at least one harmonic response frequency, each at least one harmonic response frequency uniquely corresponding to an operational mode from the plurality of operational modes.

8. The apparatus of claim 1, wherein the controller is configured to control the haptic device using pulse width modulation (PWM).

9. The apparatus of claim 1, wherein the controller is further configured to cause the at least one haptic device to output a first haptic response associated with the first operational mode and a second haptic response associated with the second operational mode.

10. The apparatus of claim 1, wherein the controller is further configured to cause the at least one haptic device to output a first haptic response associated with the first operational mode, a second haptic response associated with the second operational mode, and a transitional haptic response associated with a combination of the first haptic response and the second haptic response.

11. The apparatus of claim 1, wherein the haptic device has at least one of a variable moment and a variable

resonance frequency, the controller being configured to send a signal configured to vary the at least one moment and variable resonance frequency.

12. An apparatus, comprising:

a haptic device configured to provide a plurality of haptic feedback responses, each haptic feedback response being uniquely associated with an operational mode of the haptic device; and

means for combining the haptic feedback responses based on at least one pre-determined parameter to produce a multi-mode haptic feedback response.

13. The apparatus of claim 12, wherein the haptic device is configured to provide a low-frequency response and a high-frequency response.

14. The apparatus of claim 12, wherein the haptic device is configured to provide a low-frequency response and a high-frequency response, the means for combining being configured to provide a transitional response between the low-frequency response and the high-frequency response.

15. The apparatus of claim 12, further comprising:

means for controlling the haptic device, the means for controlling the haptic device being configured to control the response of the haptic device within a plurality of operational modes.

16. The apparatus of claim 12, further comprising:

means for controlling the haptic device, the haptic device having a variable moment, the means for controlling being configured to vary the moment of the haptic device.

17. The apparatus of claim 12, further comprising:

means for controlling the haptic device, the haptic device having a variable moment, the means for controlling being configured to vary the moment of the haptic device by varying a velocity of the haptic device.

18. The apparatus of claim 12, further comprising:

means for controlling the haptic device, the haptic device having a variable moment, the means for controlling being configured to vary the moment of the haptic device by varying a direction of the haptic device.

19. A processor-readable medium comprising code representing instructions to cause a processor to:

send a first control signal to at least one haptic device collectively having a plurality of operational modes including a first operational mode and a second operational mode, the first control signal being associated with the first operational mode and a frequency range; and

send a second control signal to the at least one haptic device, the second control signal being associated with the second operational mode and a frequency range, the frequency range of the second control signal being different from the frequency range of the first operational mode, the second control signal being different from the first control signal.

20. The processor-readable medium of claim 19, further comprising code representing instructions to cause a processor to:

combine the first operational mode and the second operational mode by varying a duty cycle of at least one of the first control signal and the second control signal.

21. The processor-readable medium of claim 19, further comprising code representing instructions to cause a processor to:

combine the first operational mode and the second operational mode by augmenting at least a portion of one of the first control signal and the second control signal.

22. The processor-readable medium of claim 19, further comprising code representing instructions to cause a processor to:

combine the first operational mode and the second operational mode by a feedback algorithm based upon at least a portion of one of the first control signal and the second control signal.

23. The processor-readable medium of claim 19, further comprising code representing instructions to cause a processor to:

change the moment of the at least one haptic device.

24. The processor-readable medium of claim 19, further comprising code representing instructions to cause a processor to:

change the moment of the at least one haptic device by varying a velocity of the at least one haptic device.

25. The processor-readable medium of claim 19, further comprising code representing instructions to cause a processor to:

change the moment of the at least one haptic device by varying the direction of movement of the at least one haptic device.

26. A method, comprising:

producing a first frequency response using a haptic device, the first frequency response being associated with a first frequency range;

producing a second frequency response using the haptic device, the second frequency response being associated with a second frequency range that is separated from the first frequency range by a transition frequency range; and

adjusting a response of the haptic device based on at least one pre-determined parameter to produce a transitional response in the transition frequency range.

27. The method of claim 26, wherein the adjusting includes:

combining the first frequency response and the second frequency response of the haptic device.

28. The method of claim 26, wherein the adjusting includes:

summing the first frequency response and the second frequency response of the haptic device.

29. The method of claim 26, wherein the adjusting includes:

multiplying the first frequency response and the second frequency response of the haptic device.

30. The method of claim 26, wherein the adjusting includes:

performing a scalar adjustment of at least one of the first frequency response and the second frequency response.

31. The method of claim 26, wherein the adjusting includes:

performing a scalar adjustment of at least one of the first frequency response and the second frequency response, the scalar adjustment being based on characteristics of the haptic device.

32. The method of claim 26, wherein the adjusting includes:

superimposing the response of the first frequency response and the second frequency response.

33. The method of claim 26, wherein the adjusting includes:

controlling the first frequency response and the second frequency response using a feedback algorithm.

34. The method of claim 26, further comprising:

varying the moment of the haptic device.

35. A method, comprising:

sending a first control signal to at least one haptic device collectively having a plurality of operational modes including a first operational mode and a second operational mode, the first control signal being associated with the first operational mode and a frequency range; and

sending a second control signal to the at least one haptic device, the second control signal being associated with the second operational mode and a frequency range, the frequency range of the second control signal being different from the frequency range of the first operational mode, the second control signal being different from the first control signal.

36. The method of claim 35, further comprising:

combining the first operational mode and the second operational mode by directly summing at least a portion of one of the first control signal and the second control signal.

37. The method of claim 35, further comprising:

combining the first operational mode and the second operational mode by multiplying at least a portion of one of the first control signal and the second control signal.

38. The method of claim 35, further comprising:

combining the first operational mode and the second operational mode by summing products associated with at least a portion of one of the first control signal and the second control signal.

39. The method of claim 35, further comprising:

combining the first operational mode and the second operational mode by augmenting at least a portion of one of the first control signal and the second control signal.

40. The method of claim 35, further comprising:

combining the first operational mode and the second operational mode by a feedback algorithm based upon at least a portion of one of the first control signal and the second control signal.

41. The method of claim 35, wherein the first signal is further configured to vary the moment of the haptic device by varying one of a velocity of the haptic device and a direction of the haptic device.

42. A processor-readable medium comprising code representing instructions to cause a processor to:

send a first signal to cause power to be provided to a haptic device, the power being configured to cause the haptic device to output a haptic sensation above a pre-determined sensation threshold;

send a second signal to cause a voltage pulse to be applied to the haptic device, the voltage pulse being configured to change the haptic sensation output by the haptic device by reducing a response time of the haptic device by a pre-determined amount.

43. The processor-readable medium of claim 42, the code representing instructions to cause a processor to send the second signal to cause a voltage pulse to be applied at the beginning of the first signal.

44. The processor-readable medium of claim 42, further comprising code representing instructions to cause a processor to:

send a third signal to cause the power provided to the haptic device to be terminated, the code representing instructions to cause a processor to send the second signal being configured to cause the voltage pulse to be applied to the haptic device at the end of the third signal.

45. The processor-readable medium of claim 42, further comprising code representing instructions to cause a processor to:

send a third signal to cause the power provided to the haptic device to be terminated, the code representing instructions to cause a processor to send the second signal being configured to cause the voltage pulse to be applied to the haptic device with a polarity opposite the polarity of the power provided to the haptic device in response to the first signal.

46. A processor-readable medium comprising code representing instructions to cause a processor to:

send a signal to cause a lead-in voltage pulse to be applied to a haptic device, the lead-in voltage pulse configured to cause the haptic device to provide a haptic sensation above a pre-determined sensation threshold within a first pre-determined period of time;

send a signal to cause power to be provided to the haptic device to maintain the haptic sensation above the pre-determined sensation threshold during a second pre-determined period of time after the first predetermined period of time.

47. The processor-readable medium of claim 46, further comprising code representing instructions to cause a processor to:

send a signal to cause a stopping voltage pulse to be provided to the haptic device, the stopping voltage pulse configured to cause the haptic device to stop providing the haptic sensation within a third predetermined period of time after the second pre-determined period of time.

48. A processor-readable medium comprising code representing instructions to cause a processor to:

send a signal to cause power to be provided to a haptic device to maintain a haptic sensation provided by the haptic device above a pre-determined sensation threshold during a first predetermined period of time;

send a signal to cause a stopping voltage pulse to be applied to the haptic device, the stopping voltage pulse configured to cause the haptic device to stop providing the haptic sensation within a second pre-determined period of time after the first pre-determined period of time

49. A method, comprising:

providing steady-state power to a haptic device, the power being configured to cause the haptic device to output a haptic sensation above a pre-determined sensation threshold;

applying a voltage pulse to the haptic device, the voltage pulse being configured to change the haptic sensation output by the haptic device by a pre-determined amount within a pre-determined reduced response time.

50. The method of claim 49, wherein the voltage pulse is applied to the haptic device prior to providing the steady-state power to the haptic device.

51. The method of claim 49, further comprising:

terminating the steady-state power provided to the haptic device, the voltage pulse being applied to the haptic device after terminating the steady-state power.

52. The method of claim 49, further comprising:

terminating the steady-state power provided to the haptic device, the voltage pulse being applied to the haptic device after terminating the power with a polarity opposite the polarity of the steady-state power provided to the haptic device.

53. A method, comprising:

applying a lead-in voltage pulse to a haptic device, the lead-in voltage pulse configured to cause the haptic device to provide a haptic sensation above a pre-determined sensation threshold within a first pre-determined period of time;

providing power to the haptic device to maintain the haptic sensation above the pre-determined sensation threshold during a second pre-determined period of time after the first pre-determined period of time.

54. The method of claim 53, further comprising:

providing a stopping voltage pulse to the haptic device, the stopping voltage pulse configured to cause the haptic device to stop providing the haptic sensation within a third pre-determined period of time after the second pre-determined period of time.

55. A method comprising:

providing power to a haptic device to maintain a haptic sensation provided by the haptic device above a pre-determined sensation threshold during a first predetermined period of time; and

applying a stopping voltage pulse to the haptic device, the stopping voltage pulse configured to cause the haptic device to stop providing the haptic sensation within a second pre-determined period of time after the first predetermined period of time.

56. An apparatus, comprising:

a controller configured to send control signals;

a variable-moment haptic device configured to provide a haptic sensation based at least partially on the control signals, the variable-moment haptic device having a moment that changes based on at least a direction of movement of the mass being varied by the control signals.

57. The apparatus of claim 56, wherein the mass is an eccentric rotating mass.

58. The apparatus of claim 56, wherein the mass is an eccentric rotating mass having at least one weighted distal portion, a relative position of the at least one weighted distal portion being configured to vary based on at least the direction of movement of the mass, the moment changing by the varying of the relative position of the at least one weighted distal portion.

59. The apparatus of claim 56, wherein the mass is an eccentric rotating mass having at least one weighted distal portion, a position of the at least one weighted distal portion being configured to vary relative to a center of rotation based on at least the direction of movement of the mass, the moment changing by the varying of the relative position of the at least one weighted distal portion.

* * * * *