US007027032B2

(12) **United States Patent**
Rosenberg et al.

(10) **Patent No.: US 7,027,032 B2**
(45) **Date of Patent: *Apr. 11, 2006**

(54) **DESIGNING FORCE SENSATIONS FOR FORCE FEEDBACK COMPUTER APPLICATIONS**

(75) Inventors: **Louis B. Rosenberg**, Pleasanton, CA (US); **Dean C. Chang**, Palo Alto, CA (US)

(73) Assignee: **Immersion Corporation**, San Jose, CA (US)

(*) Notice: Subject to any disclaimer, the term of this patent is extended or adjusted under 35 U.S.C. 154(b) by 0 days.

This patent is subject to a terminal disclaimer.

(21) Appl. No.: **10/782,878**

(22) Filed: **Feb. 23, 2004**

(65) **Prior Publication Data**

US 2004/0160415 A1 Aug. 19, 2004

Related U.S. Application Data

(63) Continuation of application No. 09/734,630, filed on Dec. 11, 2000, now Pat. No. 6,697,086, which is a continuation-in-part of application No. 08/566,282, filed on Dec. 1, 1995, now Pat. No. 5,734,373, and a continuation-in-part of application No. 08/846,011, filed on Apr. 25, 1997, now Pat. No. 6,147,674.

(51) **Int. Cl.**
G09G 5/00 (2006.01)

(52) **U.S. Cl.** **345/156**; 345/157; 715/701

(58) **Field of Classification Search** 345/156, 345/157, 161; 715/700–866, 701, 702; 436/36–38
See application file for complete search history.

(56) **References Cited**

U.S. PATENT DOCUMENTS

2,906,179 A 9/1959 Bower
2,972,140 A 2/1961 Hirsch
3,157,853 A 11/1964 Hirsch
3,220,121 A 11/1965 Cutler

(Continued)

FOREIGN PATENT DOCUMENTS

EP 0626634 A2 11/1994

(Continued)

OTHER PUBLICATIONS

Cursor Walso,"Designer's Corner-Useful Technology for Your Idea File," Design News, Mar. 7, 1993, p. 63.

(Continued)

Primary Examiner—Alexander Eisen
(74) *Attorney, Agent, or Firm*—Thelen Reid & Priest LLP; David B. Ritchie

(57) **ABSTRACT**

A design interface tool for designing force sensations for use with a host computer and force feedback interface device. A force feedback device is connected to a host computer that displays the interface tool. Input from a user is received in the interface to select a type of force sensation to be commanded by a host computer and output by a force feedback interface device. Input, such as parameters, is then received from the user which designs and defines physical characteristics of the selected force sensation. A graphical representation of the characterized force sensation is displayed on the host computer which provides a visual demonstration of a feel of the characterized force sensation so that the user can view an effect of parameters on said force sensation. The characterized force sensation is output to a user manipulatable object of the force feedback device so that the user can feel the designed force sensation, where the graphical representation is updated in conjunction with the output of the force sensation. The user can iteratively modify force sensation characteristics and feel the results, and store the characterized force sensations.

36 Claims, 25 Drawing Sheets

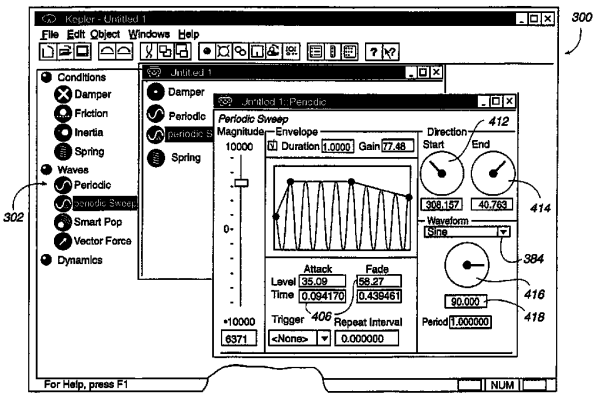

U.S. PATENT DOCUMENTS

3,490,059	A	1/1970	Paulsen et al.
3,497,668	A	2/1970	Hirsch
3,517,446	A	6/1970	Corlyon et al.
3,531,868	A	10/1970	Stevensen
3,623,064	A	11/1971	Kagan
3,875,488	A	4/1975	Crocker et al.
3,890,958	A	6/1975	Fister et al.
3,902,687	A	9/1975	Hightower
3,903,614	A	9/1975	Diamond et al.
3,911,416	A	10/1975	Feder
3,919,691	A	11/1975	Noll
3,944,798	A	3/1976	Eaton
4,125,800	A	11/1978	Jones
4,127,752	A	11/1978	Lowthorp
4,148,014	A	4/1979	Burson
4,160,508	A	7/1979	Salisbury, Jr.
4,216,467	A	8/1980	Colston
4,236,325	A	12/1980	Hall et al.
4,262,549	A	4/1981	Schwellenbach
4,333,070	A	6/1982	Barnes
4,398,889	A	8/1983	Lam et al.
4,448,083	A	5/1984	Hayashi
4,464,117	A	8/1984	Foerst
4,477,043	A	10/1984	Repperger
4,477,973	A	10/1984	Davies
4,484,191	A	11/1984	Vavra
4,513,235	A	4/1985	Acklam et al.
4,550,221	A	10/1985	Mabusth
4,550,617	A	11/1985	Fraignier et al.
4,571,834	A	2/1986	Fraser et al.
4,581,491	A	4/1986	Boothroyd
4,593,470	A	6/1986	Davies
4,599,070	A	7/1986	Hladky et al.
4,601,206	A	7/1986	Watson
4,632,341	A	12/1986	Repperger et al.
4,638,798	A	1/1987	Sheldon et al.
4,653,011	A	3/1987	Iwano
4,654,648	A	3/1987	Herrington et al.
4,676,002	A	6/1987	Slocum
4,679,331	A	7/1987	Koontz
4,688,983	A	8/1987	Lindbom
4,703,443	A	10/1987	Moriyasu
4,704,909	A	11/1987	Grahn et al.
4,708,656	A	11/1987	de Vries et al.
4,713,007	A	12/1987	Alban
4,750,487	A	6/1988	Zanetti
4,769,763	A	9/1988	Trieb et al.
4,787,051	A	11/1988	Olson
4,791,934	A	12/1988	Brunnett
4,794,392	A	12/1988	Selinko
4,798,919	A	1/1989	Miessler et al.
4,800,721	A	1/1989	Cemenska et al.
4,803,413	A	2/1989	Kendig et al.
4,811,608	A	3/1989	Hilton
4,819,195	A	4/1989	Bell et al.
4,839,838	A	6/1989	LaBiche et al.
4,849,692	A	7/1989	Blood
4,868,549	A	9/1989	Affinito et al.
4,879,556	A	11/1989	Duimel
4,885,565	A	12/1989	Embach
4,888,877	A	12/1989	Enderle et al.
4,891,764	A	1/1990	McIntosh
4,891,889	A	1/1990	Tomelleri
4,896,554	A	1/1990	Culver
4,907,970	A	3/1990	Meenen, Jr.
4,907,973	A	3/1990	Hon
4,930,770	A	6/1990	Baker
4,934,694	A	6/1990	McIntosh
4,935,728	A	6/1990	Kley
4,942,545	A	7/1990	Sapia
4,945,305	A	7/1990	Blood
4,945,501	A	7/1990	Bell et al.
4,961,138	A	10/1990	Gorniak
4,961,267	A	10/1990	Herzog
4,962,591	A	10/1990	Zeller et al.
4,982,504	A	1/1991	Soderberg et al.
4,983,786	A	1/1991	Stevens et al.
5,007,085	A	4/1991	Greanias et al.
5,007,300	A	4/1991	Siva
5,019,761	A	5/1991	Kraft
5,022,384	A	6/1991	Freels
5,022,407	A	6/1991	Horch et al.
5,035,242	A	7/1991	Franklin et al.
5,038,089	A	8/1991	Szakaly
5,040,306	A	8/1991	McMurtry et al.
5,044,956	A	9/1991	Behensky et al.
5,050,608	A	9/1991	Watanabe et al.
5,072,361	A	12/1991	Davis et al.
5,076,517	A	12/1991	Ferranti et al.
5,078,152	A	1/1992	Bond et al.
5,088,046	A	2/1992	McMurtry
5,088,055	A	2/1992	Oyama
5,095,303	A	3/1992	Clark et al.
5,103,404	A	4/1992	McIntosh
5,107,080	A	4/1992	Rosen
5,116,051	A	5/1992	Moncrief et al.
5,116,180	A	5/1992	Fung et al.
5,126,948	A	6/1992	Mitchell et al.
5,128,671	A	7/1992	Thomas, Jr.
5,131,844	A	7/1992	Marinaccio et al.
5,132,672	A	7/1992	Clark
5,139,261	A	8/1992	Openiano
5,142,506	A	8/1992	Edwards
5,142,931	A	9/1992	Menahem
5,143,505	A	9/1992	Burdea et al.
5,146,566	A	9/1992	Hollis, Jr. et al.
5,148,377	A	9/1992	McDonald
5,165,897	A	11/1992	Johnson
5,175,459	A	12/1992	Danial et al.
5,178,012	A	1/1993	Culp
5,181,181	A	1/1993	Glynn
5,182,557	A	1/1993	Lang
5,184,306	A	2/1993	Erdman et al.
5,184,319	A	2/1993	Kramer
5,185,561	A	2/1993	Good et al.
5,186,629	A	2/1993	Rohen
5,186,695	A	2/1993	Mangseth et al.
5,187,874	A	2/1993	Takahashi et al.
5,189,806	A	3/1993	McMurtry et al.
5,193,963	A	3/1993	McAffee et al.
5,204,824	A	4/1993	Fujimaki
5,209,131	A	5/1993	Baxter
5,212,473	A	5/1993	Louis
5,220,260	A	6/1993	Schuler
5,223,776	A	6/1993	Radke et al.
5,228,356	A	7/1993	Chuang
5,230,623	A	7/1993	Guthrie et al.
5,235,868	A	8/1993	Culver
5,240,417	A	8/1993	Smithson et al.
5,243,266	A	9/1993	Kasagami et al.
5,251,127	A	10/1993	Raab
5,251,156	A	10/1993	Heier et al.
5,259,120	A	11/1993	Chapman et al.
5,259,894	A	11/1993	Sampson
5,262,777	A	11/1993	Low et al.
5,264,768	A	11/1993	Gregory et al.
5,271,290	A	12/1993	Fischer
5,275,174	A	1/1994	Cook
5,275,565	A	1/1994	Moncrief
5,283,970	A	2/1994	Aigner
5,289,273	A	2/1994	Lang
5,296,846	A	3/1994	Ledley
5,299,810	A	4/1994	Pierce et al.
5,309,140	A	5/1994	Everett, Jr. et al.

5,334,027	A	8/1994	Wherlock
5,341,459	A	8/1994	Backes
5,354,162	A	10/1994	Burdea et al.
5,379,663	A	1/1995	Hara
5,384,460	A	1/1995	Tseng
5,389,865	A	2/1995	Jacobus et al.
5,396,266	A	3/1995	Brimhall
5,396,267	A	3/1995	Bouton
5,397,323	A	3/1995	Taylor et al.
5,402,582	A	4/1995	Raab
5,405,152	A	4/1995	Katanics et al.
5,412,880	A	5/1995	Raab
5,414,337	A	5/1995	Schuler
5,417,696	A	5/1995	Kashuba et al.
5,428,748	A	6/1995	Davidson et al.
5,429,140	A	7/1995	Burdea et al.
5,436,542	A	7/1995	Petelin et al.
5,436,622	A	7/1995	Gutman et al.
5,436,640	A	7/1995	Reeves
5,437,607	A	8/1995	Taylor
5,445,166	A	8/1995	Taylor
5,451,924	A	9/1995	Massimino et al.
5,459,382	A	10/1995	Jacobus et al.
5,466,213	A	11/1995	Hogan et al.
5,467,763	A	11/1995	McMahon et al.
5,482,051	A	1/1996	Reddy et al.
5,512,919	A	4/1996	Araki
5,513,100	A	4/1996	Parker et al.
5,526,480	A	6/1996	Gibson et al.
5,547,382	A	8/1996	Yamasaki et al.
5,550,562	A	8/1996	Aoki et al.
5,551,701	A	9/1996	Bouton et al.
5,570,111	A	10/1996	Barrett et al.
5,575,761	A	11/1996	Hajianpour
5,576,727	A	11/1996	Rosenberg et al.
5,589,854	A	12/1996	Tsai
5,591,924	A	1/1997	Hilton
5,596,347	A	1/1997	Robertson et al.
5,623,582	A	4/1997	Rosenberg
5,625,576	A	4/1997	Massie et al.
5,629,594	A	5/1997	Jacobus et al.
5,642,469	A	6/1997	Hannaford et al.
5,643,087	A	7/1997	Marcus et al.
5,666,138	A	9/1997	Culver
5,666,473	A	9/1997	Wallace
5,690,582	A	11/1997	Ulrich et al.
5,691,898	A	11/1997	Rosenberg et al.
5,709,219	A	1/1998	Chen et al.
5,714,978	A	2/1998	Yamanaka et al.
5,721,566	A	2/1998	Rosenberg et al.
5,734,373	A	3/1998	Rosenberg et al.
5,739,811	A	4/1998	Rosenberg et al.
5,742,278	A	4/1998	Chen et al.
5,754,023	A	5/1998	Rosten et al.
5,755,577	A	5/1998	Gillio
5,760,764	A	6/1998	Martinelli
5,766,016	A	6/1998	Sinclair et al.
5,767,839	A	6/1998	Rosenberg
5,769,640	A	6/1998	Jacobus et al.
5,781,172	A	7/1998	Engel et al.
5,785,630	A	7/1998	Bobick et al.
5,790,108	A	8/1998	Salcudean et al.
5,802,353	A	9/1998	Avila et al.
5,805,140	A	9/1998	Rosenberg et al.
5,808,601	A	9/1998	Leah et al.
5,825,308	A	10/1998	Rosenberg
5,831,408	A	11/1998	Jacobus et al.
5,844,392	A	12/1998	Peurach et al.
5,889,670	A	3/1999	Schuler et al.
5,959,613	A	9/1999	Rosenberg, et al.
6,111,577	A	8/2000	Zilles et al.
6,160,489	A	12/2000	Perry et al.
6,169,540	B1	1/2001	Rosenberg et al.
6,285,351	B1	9/2001	Chang et al.
6,292,170	B1	9/2001	Chang et al.
6,422,941	B1	7/2002	Thorner et al.
6,433,771	B1 *	8/2002	Yocum et al. 345/156

FOREIGN PATENT DOCUMENTS

EP	0875819 A1	11/1998
GB	2254911	10/1992
JP	H2-185278	7/1990
JP	4-3461	1/1992
JP	H4-8381	1/1992
JP	H5-192449	8/1993
JP	H7-24147	1/1995
WO	0 349 086 A1	1/1990
WO	WO 9502801	1/1995
WO	WO 9520787	8/1995
WO	WO 9520788	8/1995
WO	WO 9532459	11/1995
WO	WO 9616397	5/1996
WO	WO 9622591	7/1996
WO	WO 9642078	12/1996
WO	WO 9731333	8/1997

OTHER PUBLICATIONS

"Foot-Operated Mouse," IBM Technical Disclosure Bulletin, Apr. 1986, vol. 28, No. 11.

"High Performance Model of the Immersion Probe," Immersion Probe-MD.TM., Immersion Corporation (1994).

"Proceedings of the IFIP Congress 65," International Federation for Information Processing, Information Processing 1965, vol. 3, New York, May. 24-29, 1965, p. 506.

"The Personal Digitizer.TM.,"Immersion Human Interface Corporation 1994.

"Useful Technology for Your Idea File," Design News, Mar. 7, 1994, p. 63.

3D Human Interface Tool, Immersion Probe.TM., Immersion Human Interface Corporation 1994.

Adachi, Yoshitaka et al., "Sensory Evaluation of Virtual Haptic Push-Buttons," Technical Research Center, Suzuki Motor Corporation, Nov. 1994.

Adelstein Bernard D. et al., "A High Performance Two Degree-of-Freedom Kinesthetic Interface," Massachusetts Institute of Technology 1992, pp. 108-112.

Akamatsu et al., "Multimodal Mouse: A Mouse-Type Device with Tactile & Force Display," Presence, vol. 3, No. 1, 1994, pp. 73-80.

Atkinson, W. et al., "Computing with Feeling," Comp. & Graphics, vol. 2, 1976, pp. 97-103.

Batter, James J. et al., "Grope-1: A Computer Display to the Sense fo Feel," pp. TA-4-188-TA-4-192.

Bejczy et al., "The Phantom Robot: Predictive Displays for Teleoperation with Time Display," CA Institute of Technology, IEEE 1990, pp. 546-550.

Brooks Jr., Frederick et al., "Project GROPE-Haptic Displays for Scientific Visualization," Computer Graphics, vol. 24, No. 4, 1990, pp. 177-185.

Burdea, Grigore et al., "A Portable Dextrous Master with Force Feedback," Presence: Teleoperators and Virtual Environments, MIT Press, Jun. 1991.

Burdea, Grigore et al., "Dextrous Telerobotics with Force Feedback-An Overview," Robotica 1991, vol. 9.

Buttolo, Pietro et al., "Pen-Based Force Display for Precision Manipulation in Virtual Environments," IEEE Mar. 1995, pp. 1-8.

Colgate, J. Edward et al., "Implementation of Stiff Virtual Walls in Force-Reflecting Interfaces," Northwestern University, 1993.

Ellis, R.E. et al., "Design and Evaluation of a High-Performance Prototype Planar Haptic Interface," ASME Dec. 3, 1993, DSC-vol. 49, pp. 55-64.
Fischer, Patrick et al., "Specification and Design of Input Devices for Teleoperation," 1990.
Fisher, S.S. et al., "Virtual Environment Display System," ACM Interactive 3D Graphics, Oct. 1986.
Gotow, J.K., et al., "Preception of Mechanical Properties at the Man-Machine Interface," IEEE 1987, pp. 688-689.
Hannaford et al., "Force Feedback Cursor Control," NASA Tech Brief, vol. 13, No. 11, Item #21, 1989, pp. 1-4.
Hannaford, Blake et al., "Performance Evaluation of a Six-Axis Generalized Force-Reflecting Teleoperator," IEEE May/Jun. 1991, vol. 21, No. 3, pp. 620-633.
Hasser, Christopher John, "Tactile Feedback for a Force-Reflecting Haptic Display," The School of Engineering, University of Dayton, Dec. 1995, pp. iii-xii & 1-96.
Herndon, J.N. et al., "The State-of-the-Art Model M-2 Maintenance System," Proceedings of the 1984 National Topical Meeting on Robotics and Remote Handling in Hostile Environments, American Nuclear Society, pp. 59-65.
Hiroo Iwata, "Artificial Reality with Force-Feedback: Development of Desktop Virtual Space with Compact Master Manipulator," Computer Graphics, vol. 24, No. 4, 1990, pp. 165-170.
Hirota et al., "Development Of Surface Display," University Tokyo, IEEE, 1993, pp. 256-262.
Howe, Robert D., "Task Performance with a Dextrous Teleoperated Hand System," Proceedings of SPIE, Nov. 1992, vol. 1833, pp. 1-9.
Iwata, Hiroo et al, Volume Haptization, IEEE 1993, pp. 16-18.
Kelley et al., "On the Development of a Force-Feedback Mouse & It's Integration into a Graphical User Interface," Int'l Mechanical Engineering Congress and Exhibition, 1994, pp. 1-8.
Kelley et al., Magic Mouse: Tactile & Kinesthetic Feedback in the Human-Computer Interface using an Electromagnetically Acutuated Input/Output Device, 1993, University British Columbia.
Kilpatrick et al., " The Use of Kinesthetic Supplement in an Interactive Graphics System," University of North Carolina, 1976, pp. 1-174.
Kim, Won S. et al., "Graphics Displays for Operator Aid in Telemanipulation," IEEE 1991, pp. 1059-1067.
Kim, Won S. et al., A Teleoperation Training Simulator with Visual and Kinesthetic Force Virtual Reality.
Kotoku, Tetsuo et al., "Environment Modeling for the Interactive Display (EMID) Used in Telerobotic Systems," IEEE Nov. 3-5, 1991, pp. 99-1004.
Kotoku, Tetsuo, "A Predictive Display with Force Feedback and its Application to Remote Manipulation System with Transmission Time Display," IEEE 1992, Jul. 7-10, 1992, pp. 239-246.
Krueger, Myron W., Artificial Reality 1988, pp. 54-75.
Meyer, Kenneth et al., "A Survey of Position Trackers," The Massachusetts Institute of Technology 1992, Presence, vol. 1, No. 2.
Minsky, Margaret et al., "Feeling & Seeing: Issues in Force Display," ACM 1990, pp. 235-242, 270.
Munch et al., "Intelligent Control for Haptic Displays," Eurographics '96, Blackwell Publishers, vol. 15, No. 3, 1996, pp. C-217-226.
Noll, A. Michael, "Man-Machine Tactile Communication Dissertation," Polytechnic Institute of Brooklyn, Jun. 1971, pp. 1-88.
Ouh-Young et al., "Using A Manipulator for Force Display in Molecular Docking,", University North Carolina, IEEE 1988, pp. 1824-1829.
Ouh-young, Ming et al., "Creating an Illusion of Feel: Control Issues in Force Display," University of N. Carolina, 1989, pp. 1-14.
Ouh-young, Ming et al., "Force Display Performs Better than Visual Display in a Simple 6-D Docking Task," IEEE 1989, pp. 1462-1466.
Ouh-young, Ming et al., "Using a Manipulator for Force Display in Molecular Docking," IEEE 1988, pp. 1824-1829.
Ouh-Young, Ming, "Force Display in Molecular Docking," Chapel Hill 1990, pp. 1-85.
Payette et al., "Evaluation Of Force Feedback Computer Pointing device in Zero Gravity," DSC-vol. 58, Proc. of ASME Dynamics Systems and Control Division, 1996, pp. 547-553.
Repperger, D.W., "Active Force Reflection Devices in Teleoperation", IEEE Control Systems, 1991, pp. 52-56.
Rosenberg et al., "Commercially Viable Force Feedback Controller for Individuals with Neuromotor Disabilities," Crew Systems Directorate, AL/CF-TR-1997-0016, 1996, pp. 1-33.
Rosenberg et al., "Perceptual Decomposition of Virtual Haptic Surfaces," Proc. IEEE Symposium on Research Frontiers in Virtual Reality, 1993.
Rosenberg et al., "The use of force feedback to enhance graphical user interfaces," Stereoscopic Displays and Virtual Reality Systems, Proc. SPIE, 1996, pp. 243-248.
Rosenberg, "Virtual haptic Overlays enhance performance in telepresence tasks," Stanford University, 1994.
Rosenberg, L., "Perceptual Design of a Virtual Rigid Surface Contact," Air Force Material Command, AL/CF-TR-1995-0029, 1993, pp. 1-39.
Rosenberg, L., "The Use of Fixtures to Enhance Operator Performance in Time Delayed Teleoperation," Air Force Material Command, AL/CF-TR-1994-0139, 1993, pp. 1-45.
Rosenberg, Louis B., "The Use of Virtual Fixtures as Perceptual Overlays to Enhance Operator Performance in Remote Environments," Air Force Material Command, Sep. 1992, pp. 1-42.
Rosenberg, Louis B., "Virtual Fixtures as Tools to Enhance Operator Performance in Telepresence Environments," SPIE Telemanipulator Technology, 1993.
Rosenberg, Louis B., "Virtual Haptic Overlays Enhance Performance in Telepresence Tasks," SPIE 1994.
Rosenberg, Louis B., Crew Systems Directorate Biodynamics and Biocommunications Division Wright-Patterson, Air Force Material Command, Mar. 1993, pp. 1-45.
Schmult, B. et al., "Application Areas for a Force-Feedback Joystick," DSC-vol. 49, Advances in Robotics Mechatronics, and Interfaces, ASME 1993, pp. 47-54.
Smith, Geoffrey, "Call It Palpable Progress," Business Week, Oct. 9, 1995, pp. 93, 96.
Snow, E. et al., "Compact Force-Reflecting Hand Controller, " JPL, Apr. 1991, vol. 15, No. 3, Item No. 153, pp. 1-15a.
Su, S. Augustine et al., "The Virtual Panel Architecture: A 3D Gesture Framework," IEEE 1993, pp. 387-393.
Tan, Hong et al., "Human Factors for the Design of Force-Reflecting Haptic Interfaces," MIT, 1994.

Tavkhelidze, D.S., "Kinematic Analysis of Five-Link Spherical Mechanisms," Mechanism and Machine Theory, 1974, vol. 9, pp. 181-190.
Wilker, Steven F. et al., "Development of Tactile Mice for Blind Access to Computers: Importance of Stimulation of Locus, Object Size, and Vibrotactile Display Resolution," Proceedings of the Human Factors Society 35th Annual Meeting 1991, pp. 708-712.
Winey III et al., "Computer Simulated Visual & Tactile Feedback as an aid to Manipulator & Vehicle Control," MIT, 1981, pp. 1-79.
Patrick, "Design, Construction, and Testing of a Fingertip Tactile Display for Interaction with Virtual and Remote Environments," *Master of Science Thesis*, MIT, Aug. 1990, archived Nov. 8, 1990.
Calder, "Design of A Force-Feedback Touch-Introducing Actuator For Teleoperator Robot Control," *Bachelor of Science Thesis*, MIT, May 1983, archived Jun. 23, 1983.
Wiker, "Teletouch Display Development: Phase 1 Report," *Technical Report 1230*, Naval Ocean Systems Center, San Diego, Jul. 1988.
Bliss, "Optical-to-Tactile Image Conversion for the Blind," *IEEE Transactions on Man-Machine Systems*, vol. MMS-11, No. 1, Mar. 1970.
Johnson, "Shape-Memory Alloy Tactile Feedback Actuator, " *Armstrong Aerospace Medical Research Laboratory*, AAMRL-TR-90-039, Aug., 1990.
Kontarinis et al., "Tactile Display of Vibratory Information in Teleoperation and Virtual Environments," PRESENCE, 4(4):387-402, Harvard Univ., 1995.
Aukstakalnis et al., "Silicon Mirage: The Art and Science of Virtual Reality," ISBN 0-938151-82-7, pp. 129-180, 1992.
Eberhardt et al., "Inducing Dynamic Haptic Perception by The Hand: System Description and Some Results," DSC-vol. 55-1, *Dynamic Systems and Control*: vol. 1, ASME 1994.
Gobel et al., "Tactile Feedback Applied to Computer Mice," *International Journal of Human-Computer Interaction*, vol. 7, No. 1, pp. 1-24, 1995.
Pimentel et al., "Virtual Reality: through the new looking glass," 2_{nd} Edition: McGraw-Hill, ISBN 0-07-050167-X, pp. 41-202, 1994.
"Cyberman Technical Specification," *Logitech Cyberman SWIFT Supplement to Logitech Mouse Technical Reference and Programming Guide*, Apr. 5, 1994.
Ouhyoung et al., "The Development of A Low-Cost Force Feedback Joystick and Its Use in the Virtual Reality Environment," *Proceedings of the Third Pacific Conference on Computer Graphics and Applications, Pacific Graphics* '95, Seoul, Korea, Aug. 21-24, 1995.
Kaczmarek et al., "Tactile Displays," *Virtual Environment Technologies,* Chap. 9, pp. 349-414.
Lake, "Cyberman from Logitech," at http://www.ibiblio.org/GameBytes/Issue21/greviews/cyberman.html, 1994.
"Component Maintenance Manual With Illustrated Parts List, Coaxial Control Shaker Part No. C-25502," Safe Flight Instrument Corporation, Revised Jan. 28, 2002 (3 pages).
"Technical Manual Overhaul Instructions With Parts Breakdown, Coaxial Control Shaker Part No. C-25502," Safe Flight Instrument Corporation, Revised Jul. 15, 1980 (23 pages).
Scannell, "Taking a Joystick Ride," *Computer Currents*, Boston Edition, vol. 9, No. 11, Nov. 1994.
Rosenberg, "Virtual Fixtures: Perceptual Overlays Enhance Operator Performance in Telepresence Tasks," *Ph.D Dissertation*, Stanford University, Jun. 1994.
Balgrie, "Electric Control Loading—A low Cost, High Performance Alternative," *Proceedings of Interservice/Industry Training Systems Conference*, pp. 247-254, Nov. 6-8, 1990.
Iwata, "Pen-based Haptic Virtual Environment," 0-7803-1363-1/93 IEEE, pp. 287-292, 1993.
Russo, "The Design and Implementation of a Three Degree of Freedom Force Output Joystick," *MIT Libraries Archives* pp. 1-131, May 1990, archived Aug. 14, 1990.
Brooks et al., "Hand Controllers for Teleoperation—A State-of-the-Art Technology Survey and Evaluation," *JPL Publication 85-11*, NASA-CR-175890; N85-28559, pp. 1-84, Mar. 1, 1985.
Jones et al., "A perceptual analysis of stiffness," ISSN 0014-4819 Springer International (Springer-Verlag); *Experimental Brain Research*, vol. 79, No. 1, pp. 150-156, 1990.
Burdea et al., "Distributed Virtual Force Feedback, Lecture Notes for Workshop on Force Display in Virtual Environments and its Application to Robotic Teleoperation," *1993 IEEE International Conference on Robotics and Automation*, pp. 25-44, May 2, 1993.
Snow et al., Model-X Force-Reflecting-Hand-Controller, NT Control No. NPO-17851; JPL Case No. 7348, pp. 1-4 with 45 pages of attachments, Jun. 15, 1989.
Ouh-Young, "Force Display in Molecular Docking," Doctoral Dissertation, University of North Carolina at Chapel Hill, UMI Order No. 9034744, p. 1-369, 1990.
Tadros, "Control System Design for a Three Degree of Freedom Virtual Environment Simulator Using Motor/Brake Pair Actuators," *MIT Archive,* pp. 1-88, Feb. 1990, archived Aug. 13, 1990.
Caldwell et al., "Enhanced Tactile Feedback (Tele-Taction) Using a Multi-Functional Sensory System," 1050-4729/93, pp. 955-960, 1993.
Adelstein et al. "Design and Implementation of a Force Reflecting Manipulandum of Manual Control research," DSC-vol. 42, *Advances in Robotics*, pp. 1-12, 1992.
Gotow et al., "Controlled Impedance Test Apparatus for Studying Human Interpretation of Kinesthetic Feedback," WA11-11:00, pp. 332-337.
Stanley et al., "Computer Simulation of Interacting Dynamic Mechanical Systems Using Distributed Memory Parallel Processors," DSC-vol. 42, *Advances in Robotics*, pp. 55-61, ASME 1992.
Russo, "Controlling Dissipative Magnetic Particle Brakes in Force Reflective Devices," DSC-vol. 42 *Advances in Robotics,* pp. 63-70, ASME 1992.
Kontarinis et al., "Display of High-Frequency Tacile Information to Teleoperators," *Telemanipulator Technology and Space Telerobotics*, Won S. Kim, Editor, Proc. SPIE vol. 2057, pp. 40-50, Sep. 7-9, 1993.
Patrick et al., "Design and Testing of A Non-reactive, Fingertip, Tactile Display for Interaction with Remote Environments," *Cooperative Intelligent Robotics in Space,* Rui J. deFigueiredo et al, Editor, Proc. SPIE vol. 1387, pp. 215-222, 1990.
Adelstein, "A Virtual Enivironment System For The Study of Human Arm Tremor," *Ph.D. Dissertation*, Dept. of Mechanical Engineering, MIT, Jun. 1989, archived Mar. 13, 1990.

Bejczy, "Sensors, Controls, and Man-Machine Interface for Advanced Teleoperation," *Science*, vol. 208, No. 4450, pp. 1327-1335, 1980.

Bejczy et al., "Generalization of Bilateral Force-Reflecting Control Of Manipulators," *Proceedings of Fourth CISM-IFToMM,* Sep. 8-12, 1981.

McAffee et al., "Teleoperator Subsystem/Telerobot Demonstrator: Force Reflecting Hand Controller Equipment Manual," *JPL* 1988, JPL D-5172.

Minsky, "Computational Haptics: The Sandpaper System for Synthesizing Texture for a Force-Feedback Display," *Ph.D. Dissertation,* MIT, Jun. 1995, archived Jul. 6, 1995.

Jacobsen et al., "High Performance, Dextrous Telerobotic Manipulator With Force Reflection," *Intervention/ROV '91 Conference & Exposition,* Hollywood, Florida, May 21-23, 1991.

Shimoga, "Finger Force and Touch Feedback Issues in Dexterous Telemanipulation," *Proceedings of Fourth Annual Conference on Intelligent Robotic Systems for Space Exploration,* Rensselaer Polytechnic Institute, Sep. 30-Oct. 1, 1992.

IBM Technical Disclosure Bulletin, "Mouse Ball-Actuating Device With Force and Tactile Feedback," vol.32, No. 9B, Feb. 1990.

Terry et al., "Tactile Feedback In A Computer Mouse," *Proceedings of Fourteenth Annual Northeast Bioengineering Conference, University of New Hampshire,* Mar. 10-11, 1988.

Howe, "A Force-Reflecting Teleoperated Hand System for the Study of Tactile Sensing in Precision Manipulation, "*Proceedings of the 1992 IEEE International Conference on Robotics and Automation,* Nice, France, May 1992.

Eberhardt et al., "OMAR—A Haptic display for speech perception by deaf and deaf-blind individuals," *IEEE Virtual Reality Annual International Symposium,* Seattle, WA, Sep. 18-22, 1993.

Rabinowitz et al., "Multidimensional tactile displays: Identification of vibratory intensity, frequency, and contractor area," *Journal of The Acoustical Society of America,* vol. 82, No. 4, Oct. 1987.

Bejczy et al., "Kinesthetic Coupling Between Operator and Remote Manipulator," *International Computer Technology Conference, The American Society of Mechanical Engineers,* San Francisco, CA, Aug. 12-15, 1980.

Bejczy et al., "A Laboratory Breadboard System For Dual-Arm Teleoperation," *SOAR '89 Workshop, JSC,* Houston, TX, Jul. 25-27, 1989.

Ouhyoung et al., "A Low-Cost Force Feedback Joystick and Its Use in PC Video Games," *IEEE Transactions on Consumer Electronics,* vol. 41, No. 3, Aug. 1995.

Marcus, "Touch Feedback in Surgery," *Proceedings of Virtual Reality and Medicine The Cutting Edge,* Sep. 8-11, 1994.

Bejczy, et al., "Universal Computer Control System (UCCS) For Space Telerobots," CH2413-3/87/0000/0318501. 001987 IEEE, 1987.

* cited by examiner

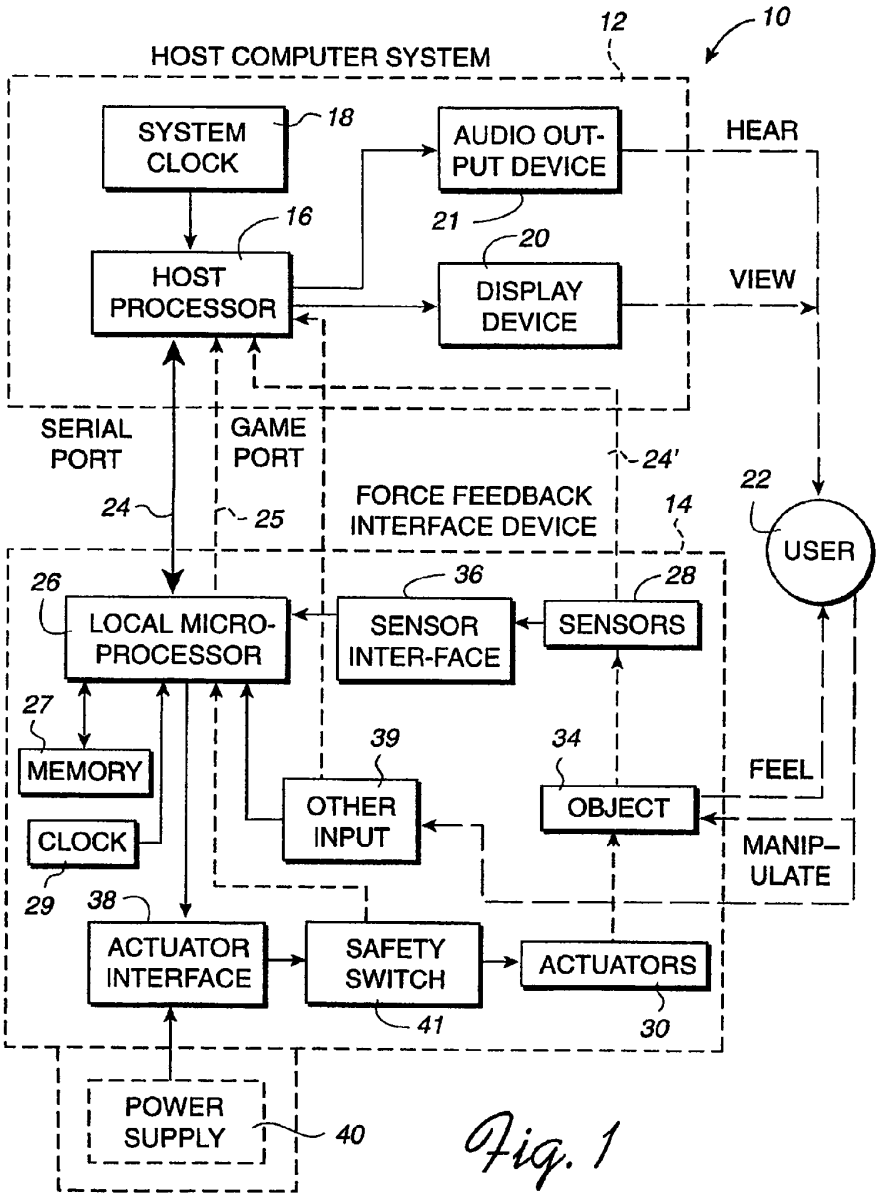
HOST COMPUTER SYSTEM
12
10
SYSTEM CLOCK
18
AUDIO OUT-PUT DEVICE
HEAR
21
16
20
HOST PROCESSOR
DISPLAY DEVICE
VIEW
SERIAL PORT
GAME PORT
24'
22
24
25
FORCE FEEDBACK INTERFACE DEVICE
14
USER
26
36
28
LOCAL MICRO-PROCESSOR
SENSOR INTER-FACE
SENSORS
27
39
34
MEMORY
OTHER INPUT
OBJECT
FEEL
CLOCK
MANIP-ULATE
29
38
ACTUATOR INTERFACE
SAFETY SWITCH
ACTUATORS
41
30
POWER SUPPLY
40

Fig. 1

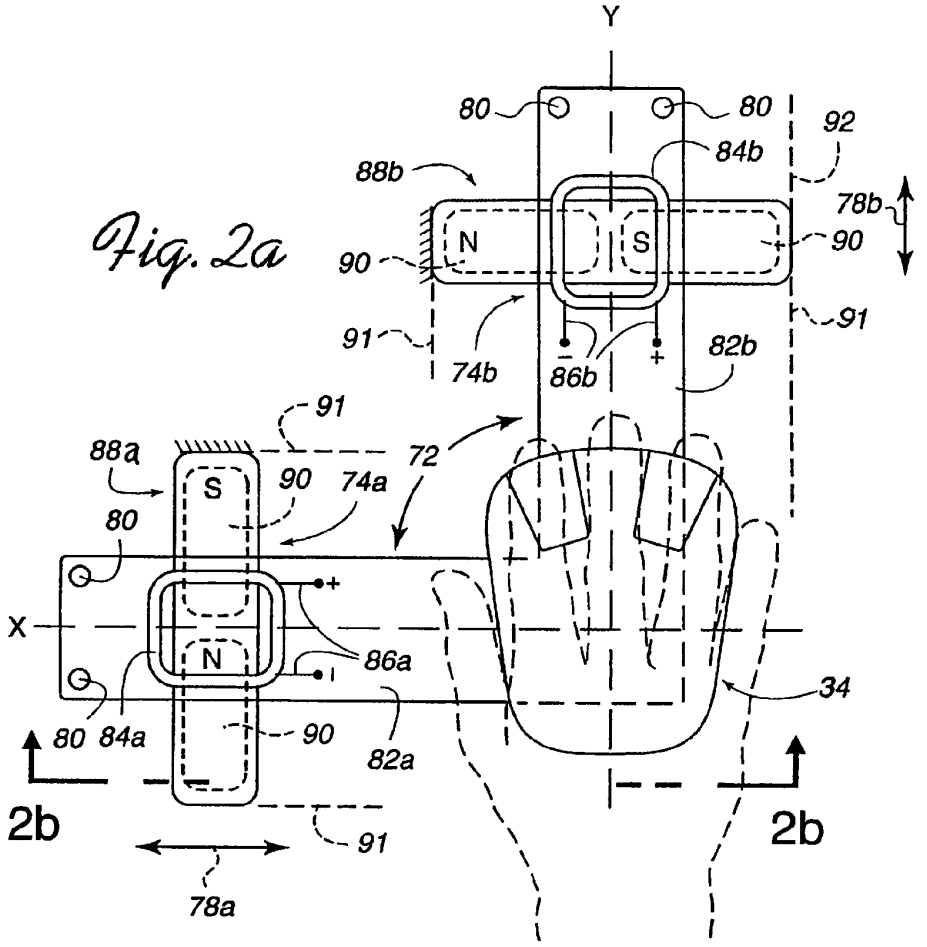
Y
80
80
92
84b
88b
78b
N
S
90
90
91
91
74b
86b
82b
91
88a
72
S
90
74a
80
X
N
86a
34
80
84a
90
82a
2b
2b
91
78a

Fig. 2a

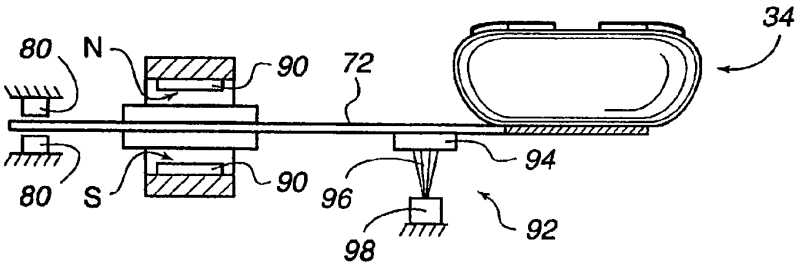
34
80
N
90
72
94
80
S
90
96
92
98

Fig. 2b

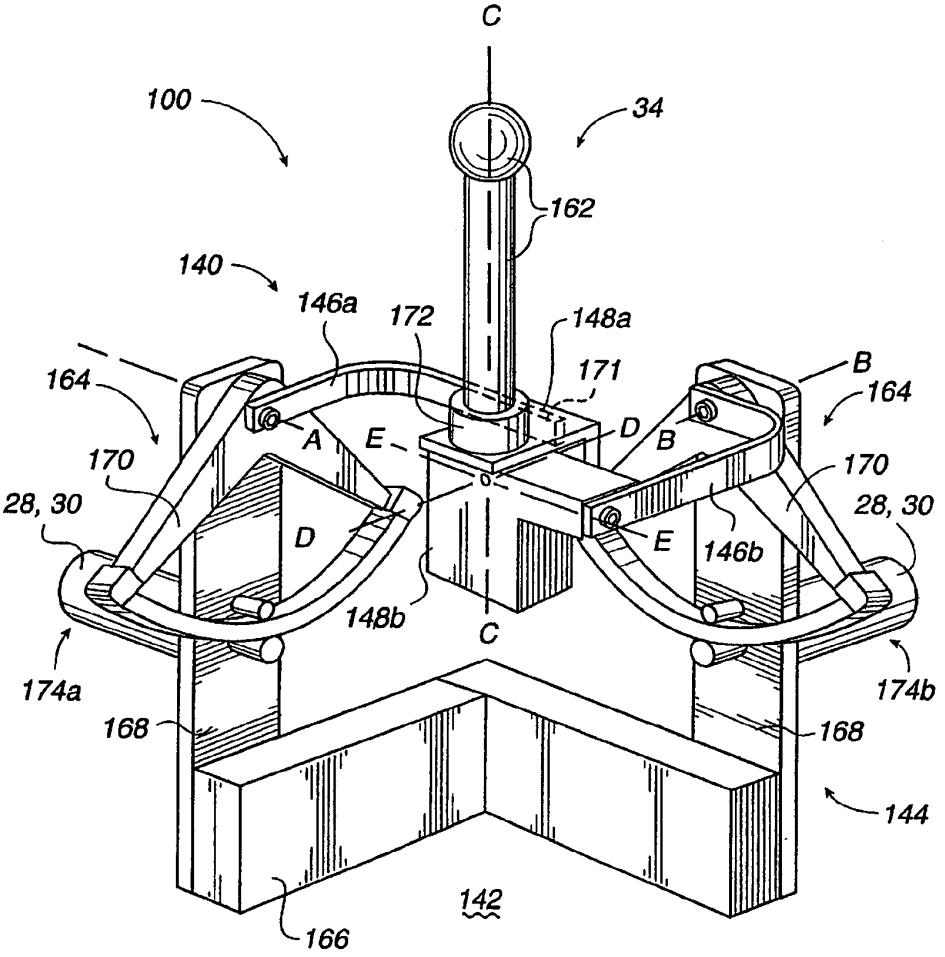
C
100
34
162
140
146a
172
148a
171
164
B
164
A
E
D
B
170
170
28, 30
28, 30
D
E
146b
148b
C
174a
174b
168
168
144
142
166

Fig. 3

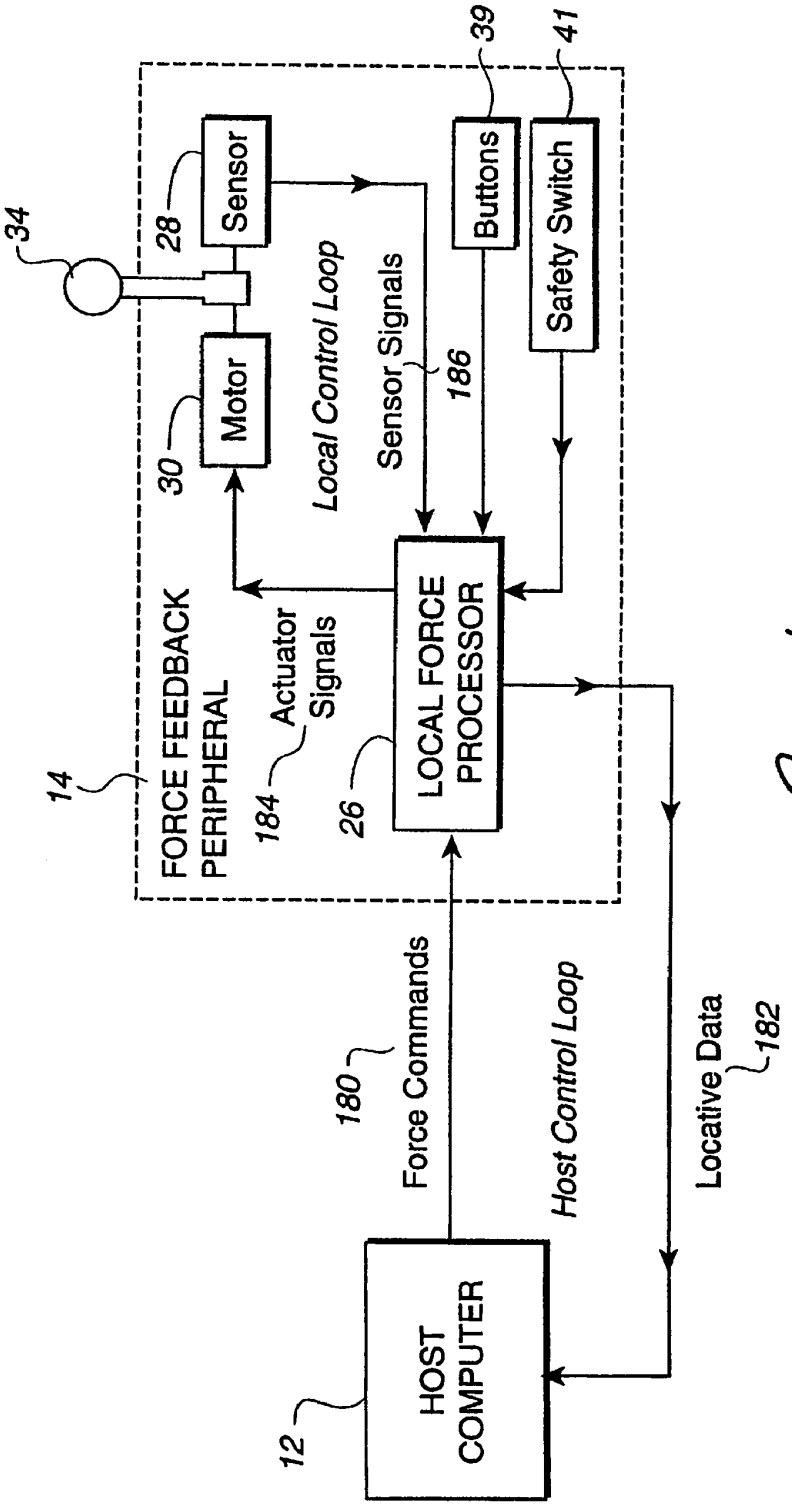
34
28
Sensor
30
Motor
Local Control Loop
Sensor Signals
186
39
Buttons
41
Safety Switch
14
FORCE FEEDBACK PERIPHERAL
184
Actuator Signals
26
LOCAL FORCE PROCESSOR
180
Force Commands
Host Control Loop
Locative Data
182
12
HOST COMPUTER

Fig. 4

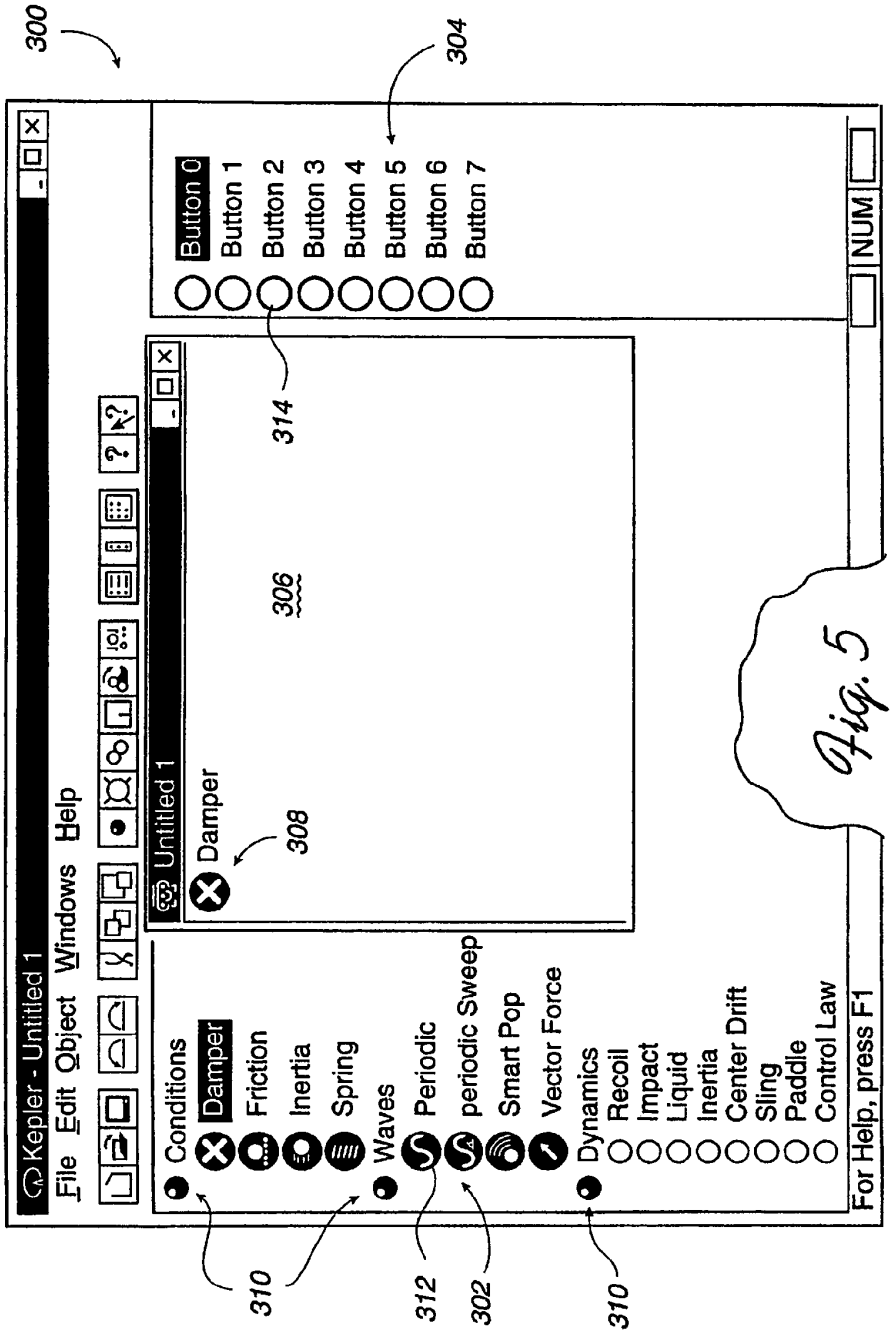
300
304
Kepler - Untitled 1
File Edit Object Windows Help
Button 0
Button 1
Button 2
Button 3
Button 4
Button 5
Button 6
Button 7
314
306
Untitled 1
Damper
308
Conditions
Damper
Friction
Inertia
Spring
Waves
Periodic
periodic Sweep
Smart Pop
Vector Force
Dynamics
Recoil
Impact
Liquid
Inertia
Center Drift
Sling
Paddle
Control Law
310
312
302
310
For Help, press F1
NUM

Fig. 5

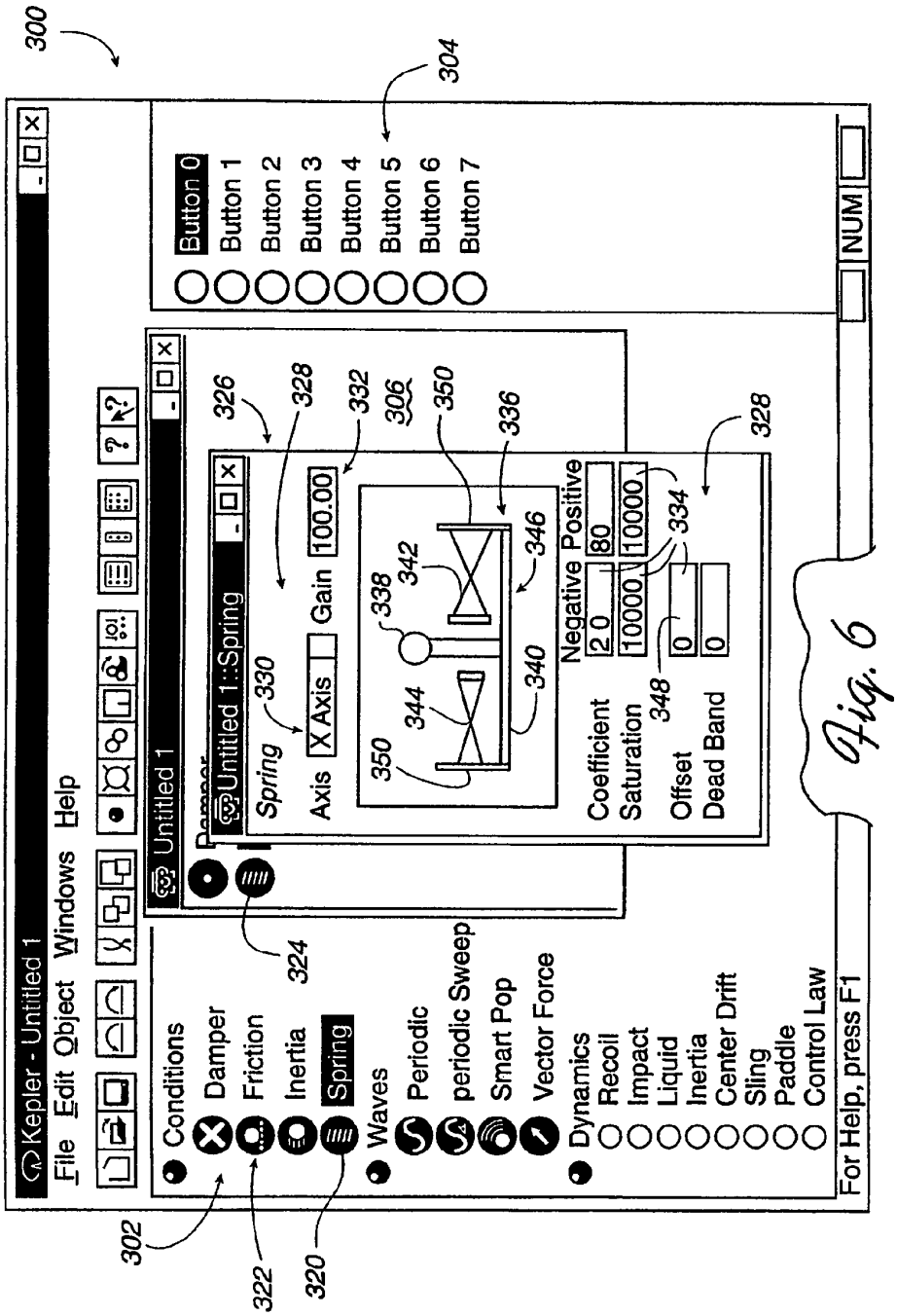
300
304
Kepler - Untitled 1
File Edit Object Windows Help
Button 0
Button 1
Button 2
Button 3
Button 4
Button 5
Button 6
Button 7
NUM
Untitled 1
Untitled 1::Spring
326
328
332
306
350
336
Spring
330
Axis
X Axis
Gain
100.00
338
342
346
344
340
Negative
Positive
Coefficient
2.0
80
Saturation
10000
10000
334
Offset
0
348
Dead Band
0
328
324
Conditions
Damper
Friction
Inertia
Spring
Waves
Periodic
periodic Sweep
Smart Pop
Vector Force
Dynamics
Recoil
Impact
Liquid
Inertia
Center Drift
Sling
Paddle
Control Law
For Help, press F1
302
322
320

Fig. 6

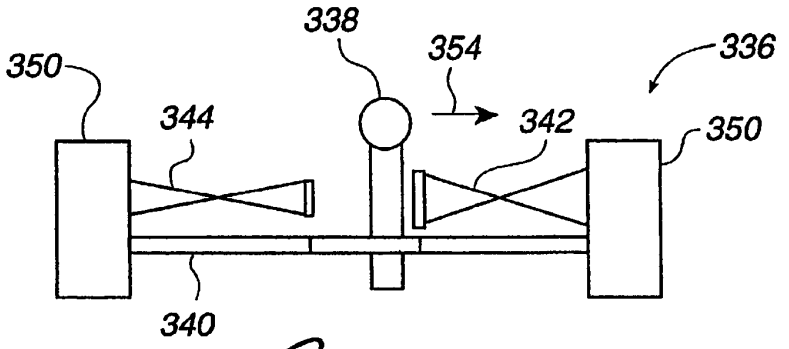

Fig. 7a

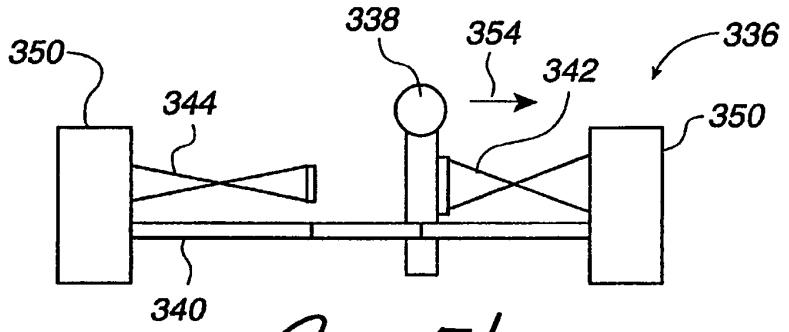

Fig. 7b

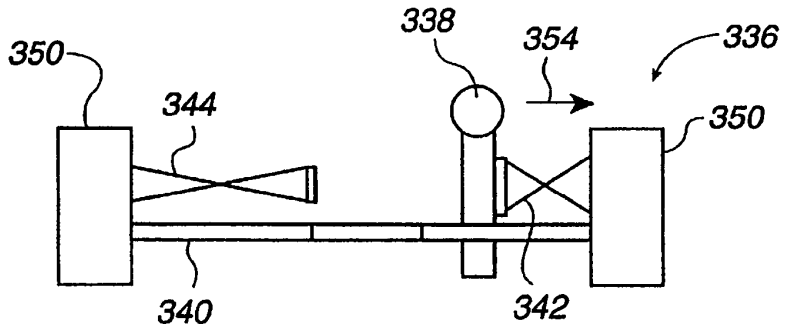

Fig. 7c

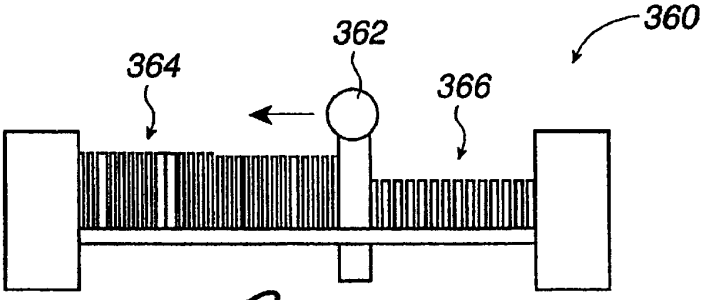

Fig. 8

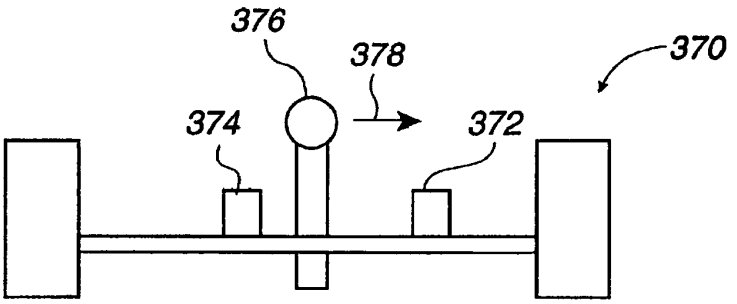

Fig. 9a

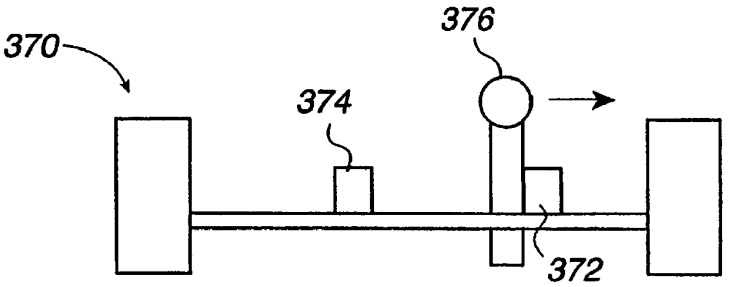

Fig. 9b

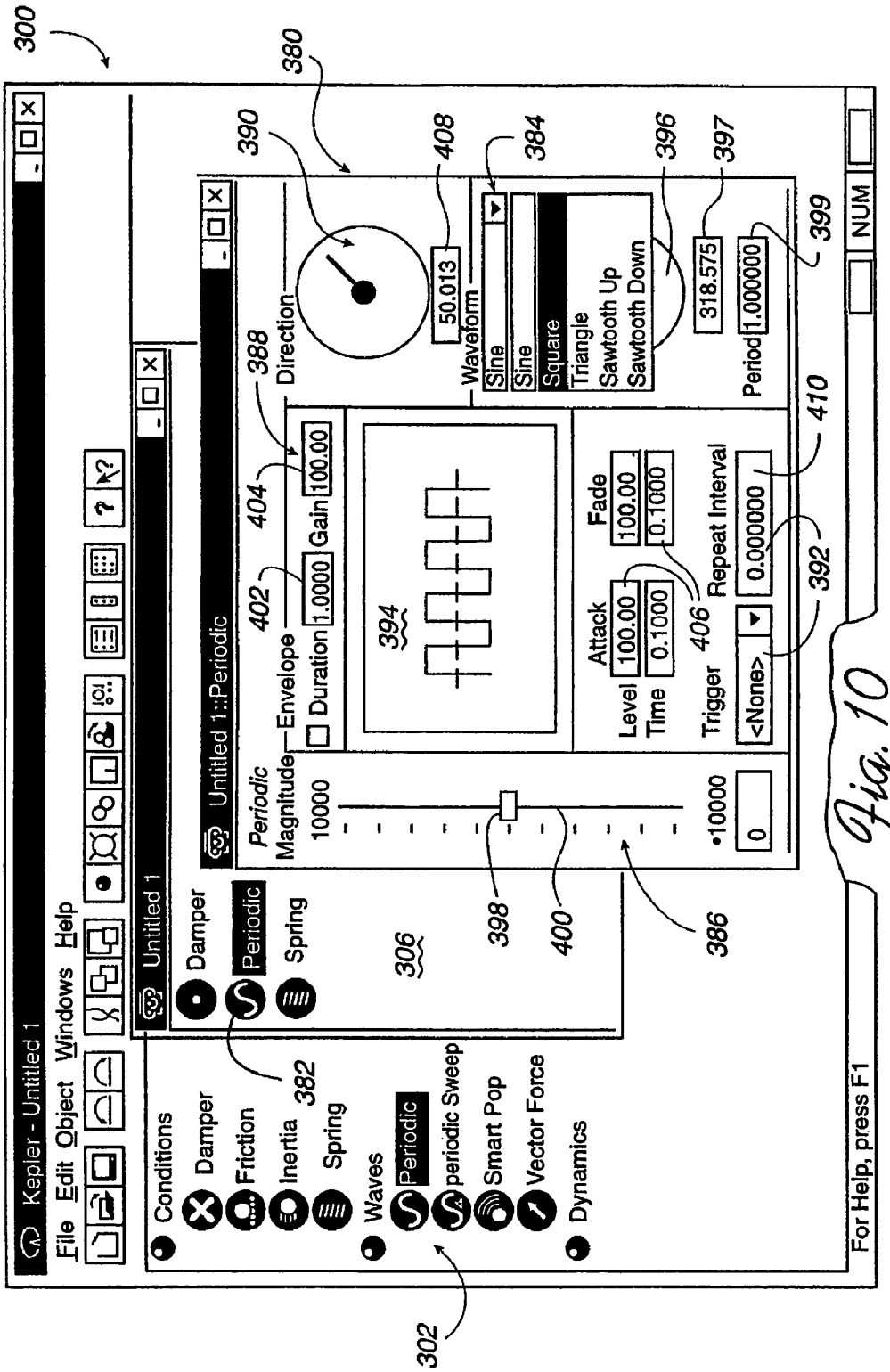
300
Kepler - Untitled 1
File Edit Object Windows Help
Untitled 1
Damper
Periodic
Spring
Conditions
Damper
Friction
Inertia
Spring
Waves
Periodic
periodic Sweep
Smart Pop
Vector Force
Dynamics
Untitled 1::Periodic
Periodic
Magnitude
10000
•10000
0
Envelope
Duration 1.0000
Gain 100.00
Direction
50.013
Waveform
Sine
Sine
Square
Triangle
Sawtooth Up
Sawtooth Down
318.575
Period 1.000000
Attack
Level 100.00
Time 0.1000
Fade
100.00
0.1000
Trigger
<None>
Repeat Interval
0.000000
NUM
For Help, press F1
302
306
380
382
384
386
388
390
392
394
396
397
398
399
400
402
404
406
408
410

Fig. 10

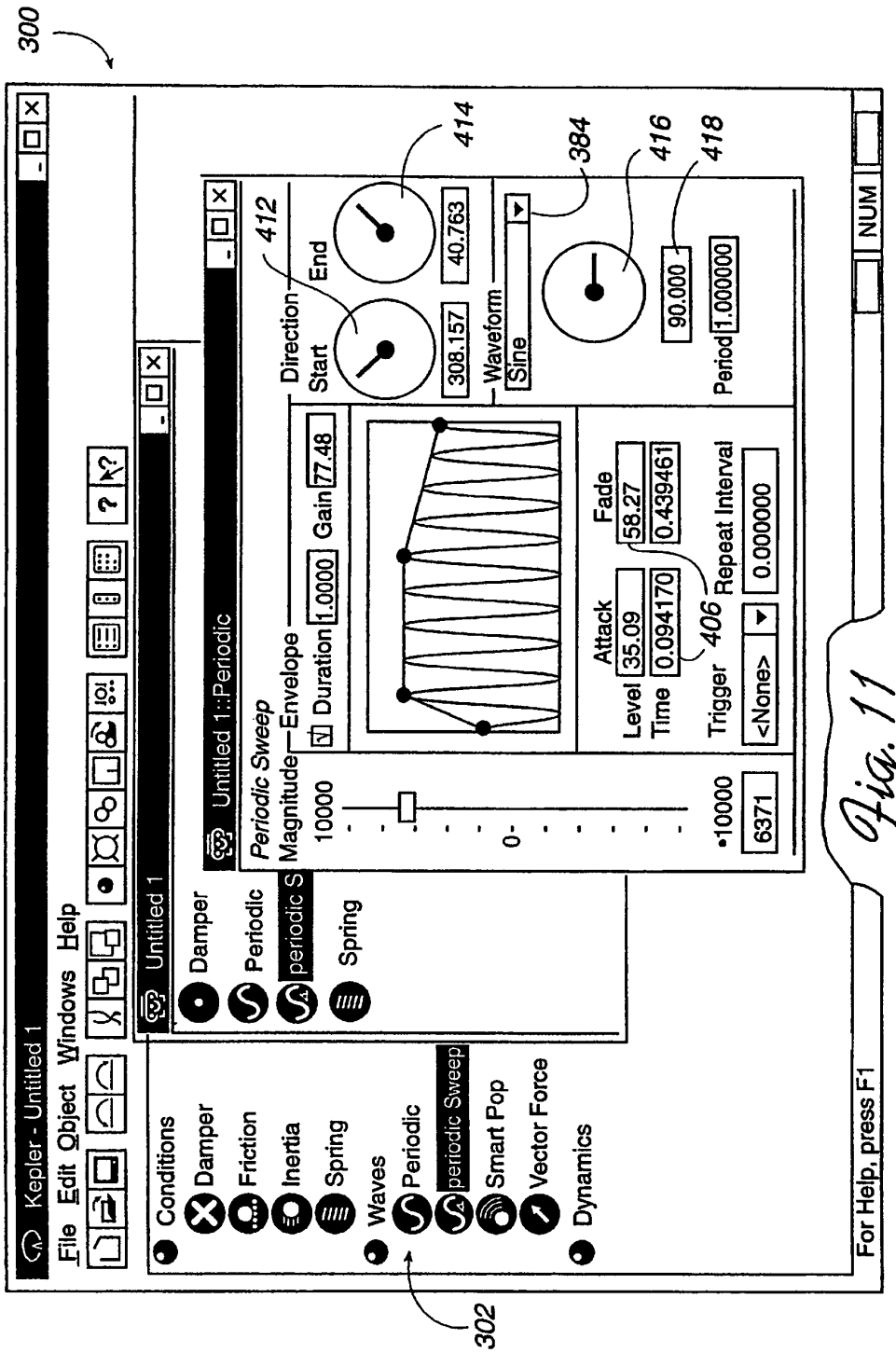
300
Kepler - Untitled 1
File Edit Object Windows Help
Untitled 1
Untitled 1::Periodic
Damper
Periodic
periodic S
Spring
Periodic Sweep
Magnitude
Envelope
Duration 1.0000
Gain 77.48
Direction
Start
End
308.157
40.763
Waveform
Sine
Period 1.000000
90.000
Attack
Level 35.09
Time 0.094170
Fade
58.27
0.439461
Trigger
<None>
Repeat Interval
0.000000
10000
0
-10000
6371
Conditions
Damper
Friction
Inertia
Spring
Waves
Periodic
periodic Sweep
Smart Pop
Vector Force
Dynamics
For Help, press F1
NUM
302
412
414
384
416
418
406

Fig. 11

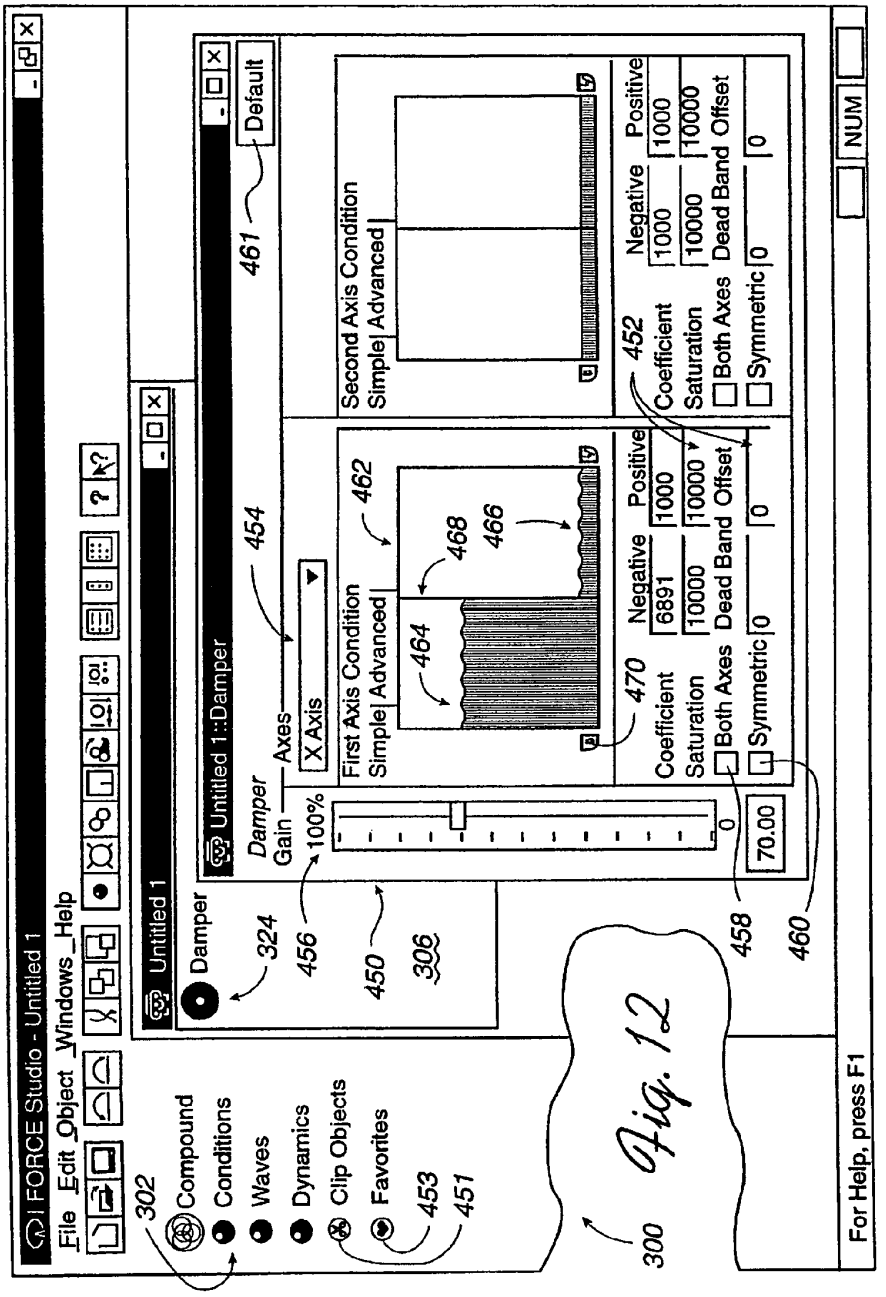
FORCE Studio - Untitled 1
File Edit Object Windows Help
Compound
Conditions
Waves
Dynamics
Clip Objects
Favorites
Untitled 1
Damper
Untitled 1::Damper
Default
Damper Gain
100%
Axes
X Axis
First Axis Condition
Simple Advanced
Second Axis Condition
Simple Advanced
Coefficient
Saturation
Both Axes
Symmetric
Negative
Positive
6891
1000
10000
Dead Band Offset
70.00
NUM
For Help, press F1
300
302
324
450
451
452
453
454
456
458
460
461
462
464
466
468
470
306

Fig. 12

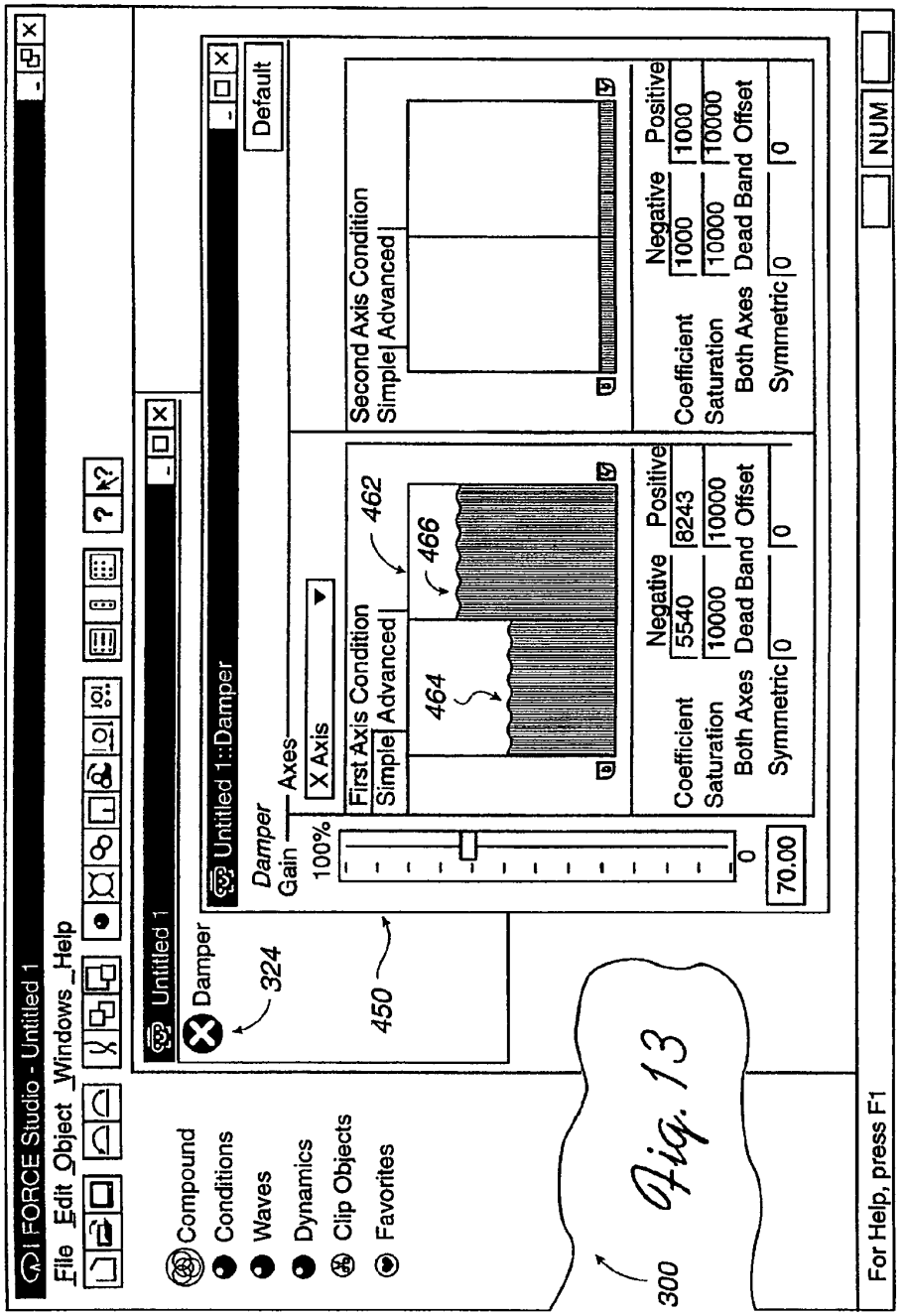
I FORCE Studio - Untitled 1
File Edit Object Windows Help
Compound
Conditions
Waves
Dynamics
Clip Objects
Favorites
Untitled 1
Damper
324
Untitled 1::Damper
Default
Damper
Gain
Axes
100%
X Axis
450
First Axis Condition
Simple Advanced
462
464
466
Coefficient
Saturation
Both Axes
Symmetric
Negative
Positive
5540
8243
10000
10000
0
0
70.00
Second Axis Condition
Simple Advanced
Coefficient
Saturation
Both Axes
Symmetric
Negative
Positive
1000
1000
10000
10000
0
0
Dead Band
Offset
300
For Help, press F1
NUM

Fig. 13

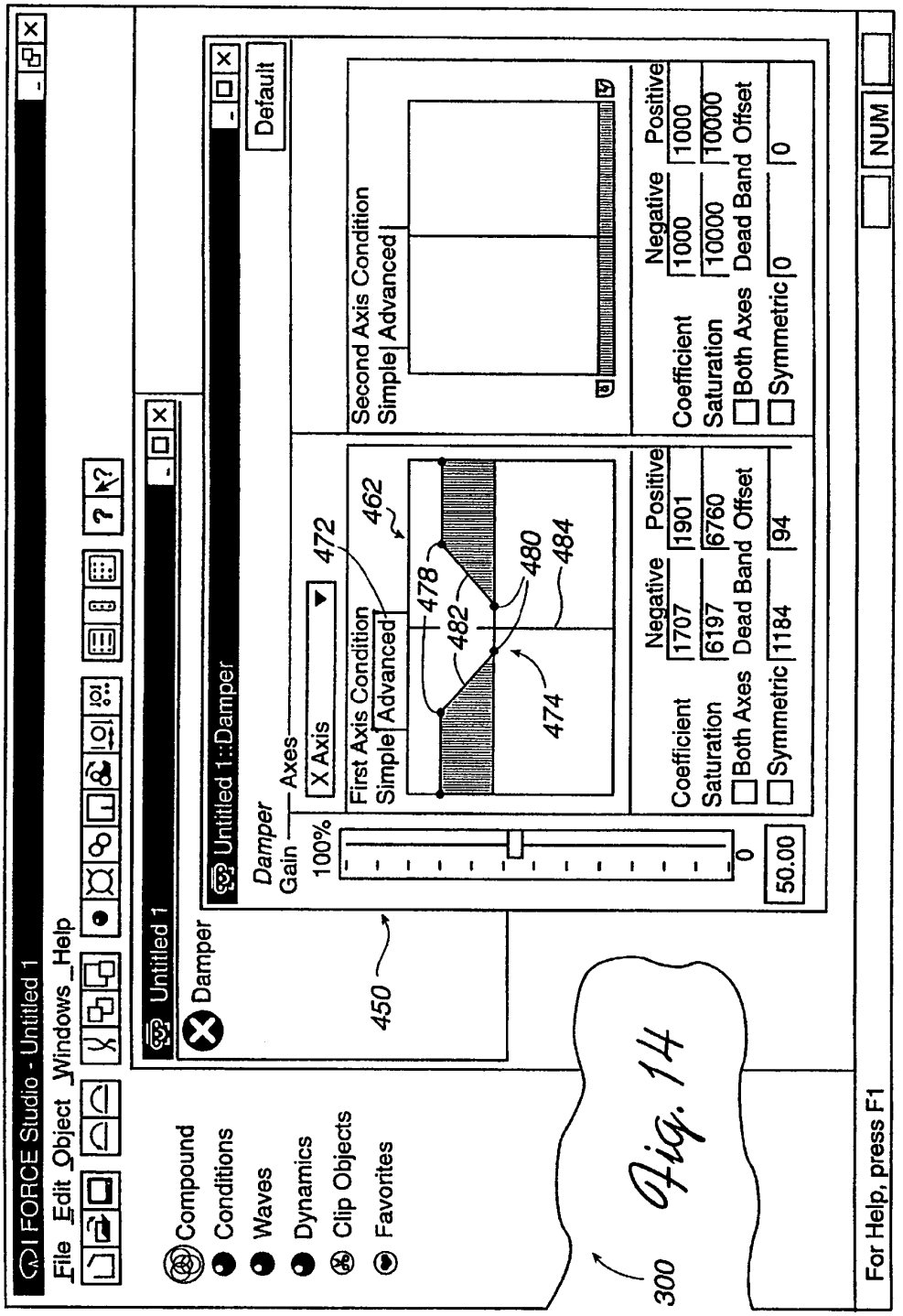
I FORCE Studio - Untitled 1
File Edit Object Windows Help
Compound
Conditions
Waves
Dynamics
Clip Objects
Favorites
Untitled 1
Damper
Untitled 1::Damper
Default
Damper
Gain
100%
Axes
X Axis
First Axis Condition
Simple Advanced
Second Axis Condition
Simple Advanced
Coefficient
Saturation
Both Axes
Symmetric
Negative
Positive
1707
1901
6197
6760
1184
94
1000
1000
10000
10000
0
0
Dead Band Offset
50.00
0
For Help, press F1
NUM
300
450
462
472
474
478
480
482
484

Fig. 14

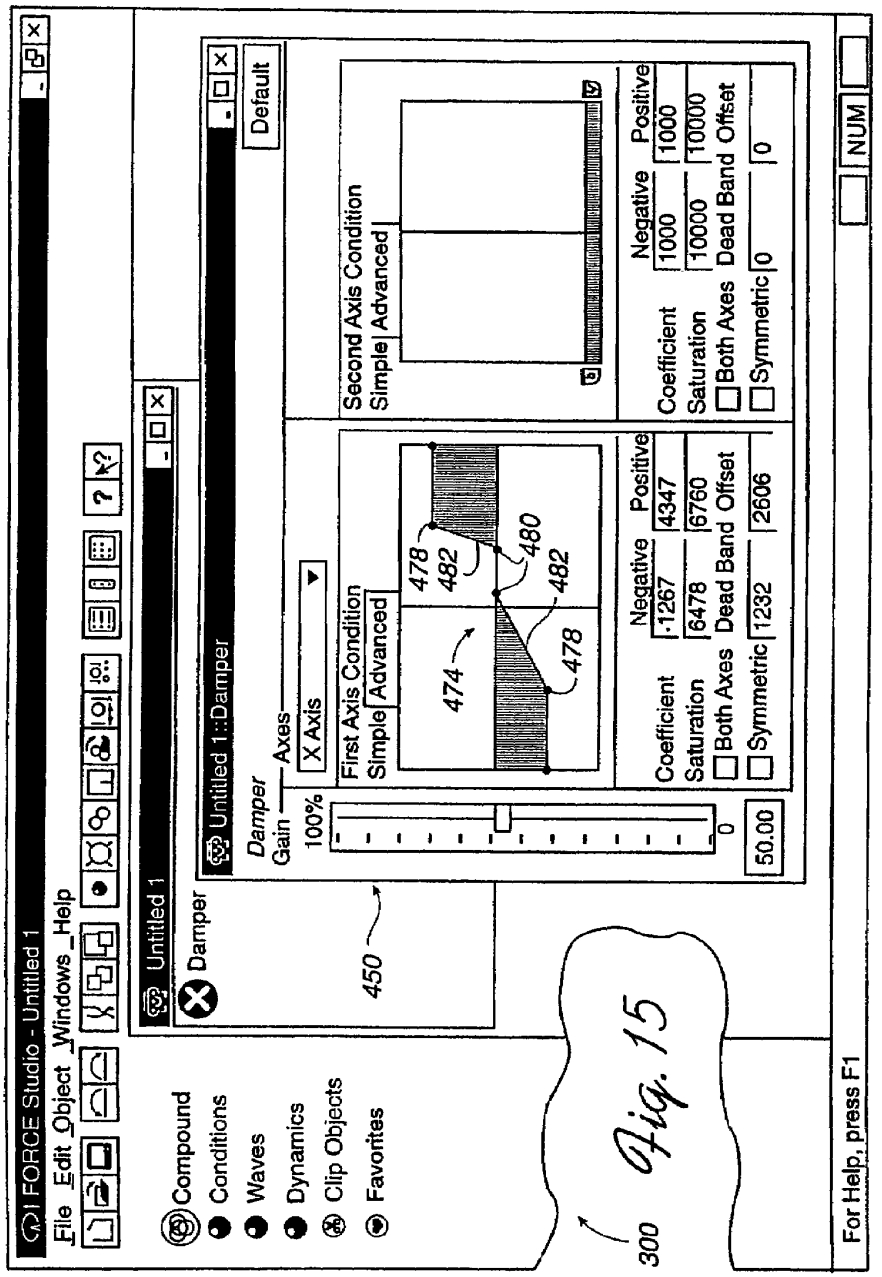
FORCE Studio - Untitled 1
File Edit Object Windows Help
Compound
Conditions
Waves
Dynamics
Clip Objects
Favorites
Untitled 1
Damper
Untitled 1::Damper
Default
Damper
Gain
Axes
X Axis
100%
0
50.00
450
First Axis Condition
Simple Advanced
474
478
480
482
Second Axis Condition
Simple Advanced
Coefficient
Saturation
Both Axes
Symmetric
Negative
Positive
Dead Band
Offset
-1267
4347
6478
6760
1232
2606
1000
10000
0
300
For Help, press F1
NUM

Fig. 15

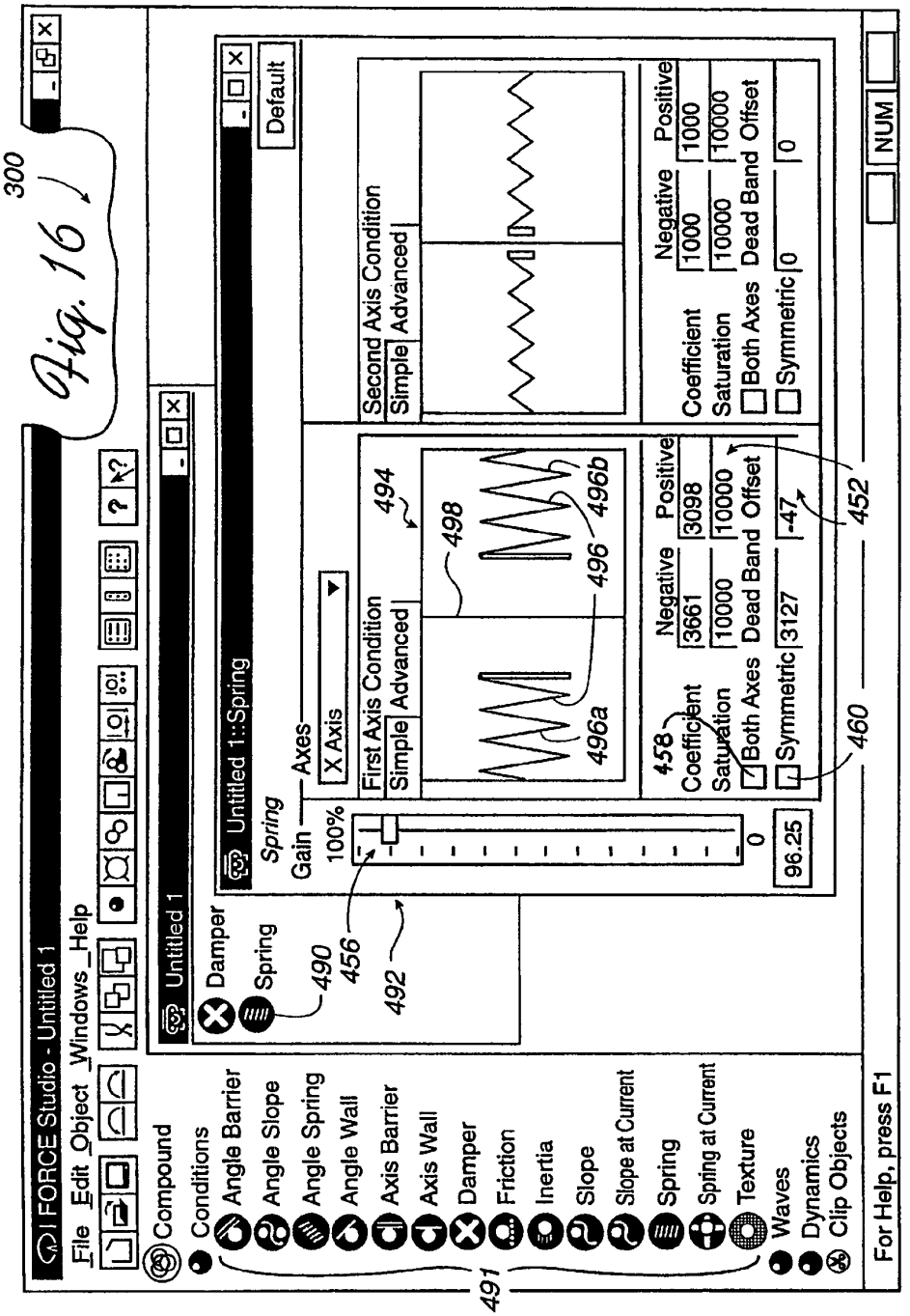
300
Fig. 16
I FORCE Studio - Untitled 1
File Edit Object Windows Help
Compound
Conditions
Angle Barrier
Angle Slope
Angle Spring
Angle Wall
Axis Barrier
Axis Wall
Damper
Friction
Inertia
Slope
Slope at Current
Spring
Spring at Current
Texture
Waves
Dynamics
Clip Objects
491
Untitled 1
Damper
Spring
490
456
492
Untitled 1::Spring
Default
Spring
Gain
100%
0
Axes
X Axis
First Axis Condition
Simple
Advanced
494
498
496
496a
496b
Second Axis Condition
Simple
Advanced
Coefficient
Saturation
Both Axes
Symmetric
Negative
Positive
Dead Band
Offset
3661
3098
10000
10000
3127
-47
1000
1000
10000
10000
0
0
458
452
460
96.25
For Help, press F1
NUM

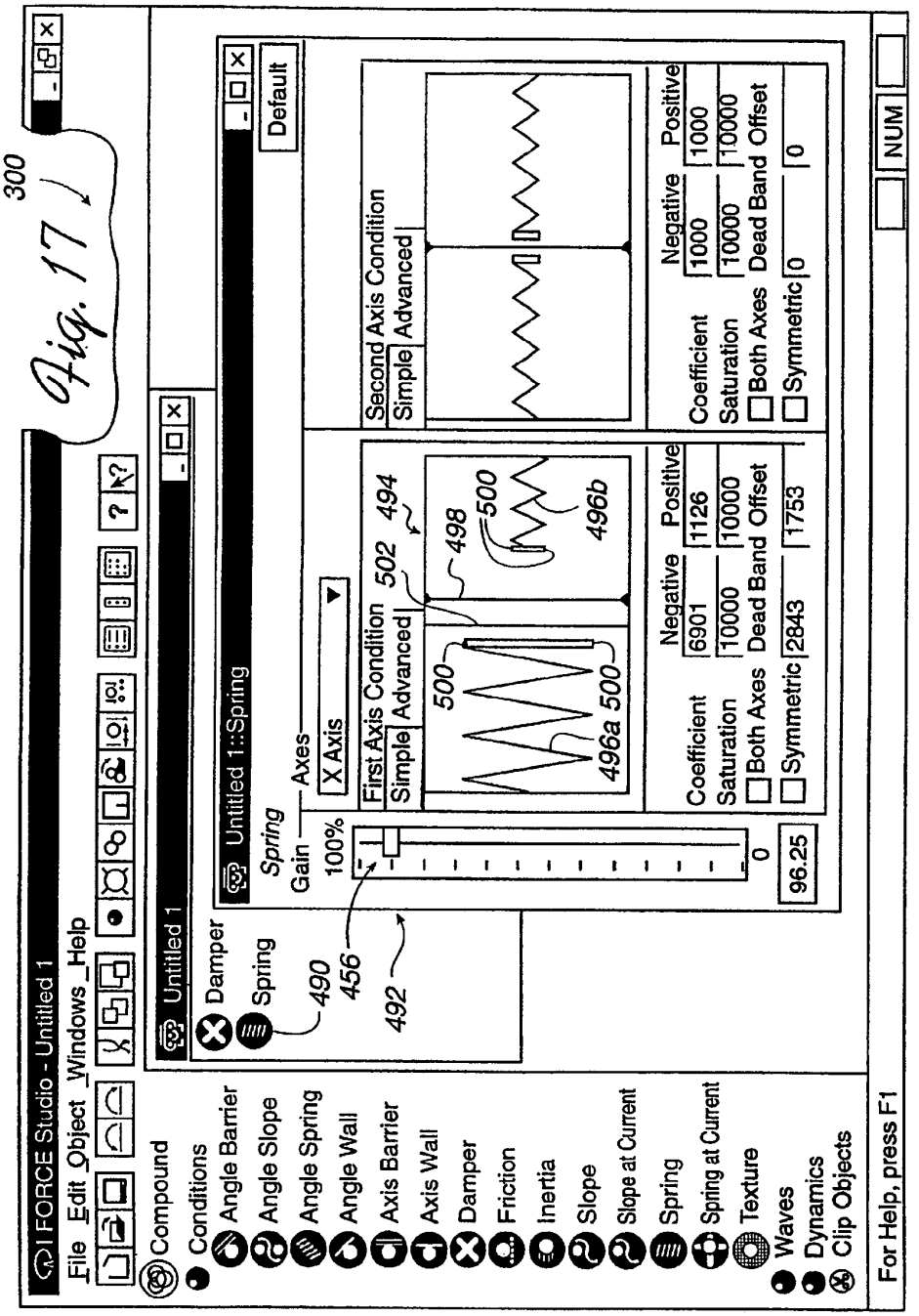
300
Fig. 17
I FORCE Studio - Untitled 1
File Edit Object Windows Help
Compound
Conditions
Angle Barrier
Angle Slope
Angle Spring
Angle Wall
Axis Barrier
Axis Wall
Damper
Friction
Inertia
Slope
Slope at Current
Spring
Spring at Current
Texture
Waves
Dynamics
Clip Objects
Untitled 1
Damper
Spring
490
456
492
Untitled 1::Spring
Default
Spring
Gain
Axes
100%
X Axis
0
96.25
First Axis Condition
Simple
Advanced
502
494
498
500
496a
496b
Coefficient
Saturation
Both Axes
Symmetric
Negative
Positive
Dead Band
Offset
6901
1126
10000
10000
2843
1753
Second Axis Condition
1000
1000
10000
10000
0
0
For Help, press F1
NUM

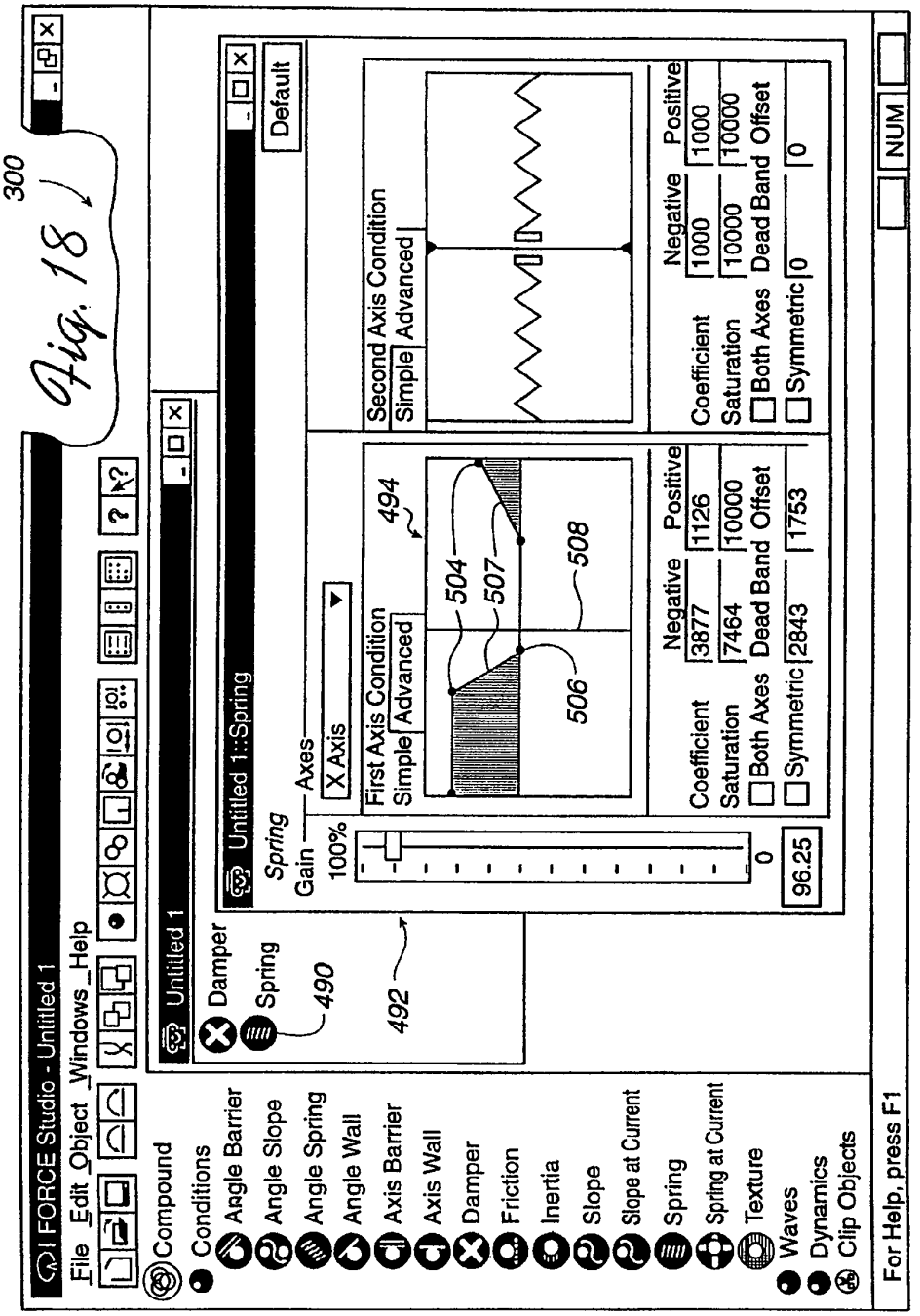
300
Fig. 18
FORCE Studio - Untitled 1
File Edit Object Windows Help
Compound
Conditions
Angle Barrier
Angle Slope
Angle Spring
Angle Wall
Axis Barrier
Axis Wall
Damper
Friction
Inertia
Slope
Slope at Current
Spring
Spring at Current
Texture
Waves
Dynamics
Clip Objects
Untitled 1
Damper
Spring
490
492
Untitled 1::Spring
Default
Spring
Gain
100%
0
96.25
Axes
X Axis
First Axis Condition
Simple Advanced
494
504
507
506
508
Coefficient
Saturation
Both Axes
Symmetric
Negative
Positive
Dead Band
Offset
3877
1126
7464
10000
2843
1753
Second Axis Condition
Simple Advanced
1000
1000
10000
10000
0
0
For Help, press F1
NUM

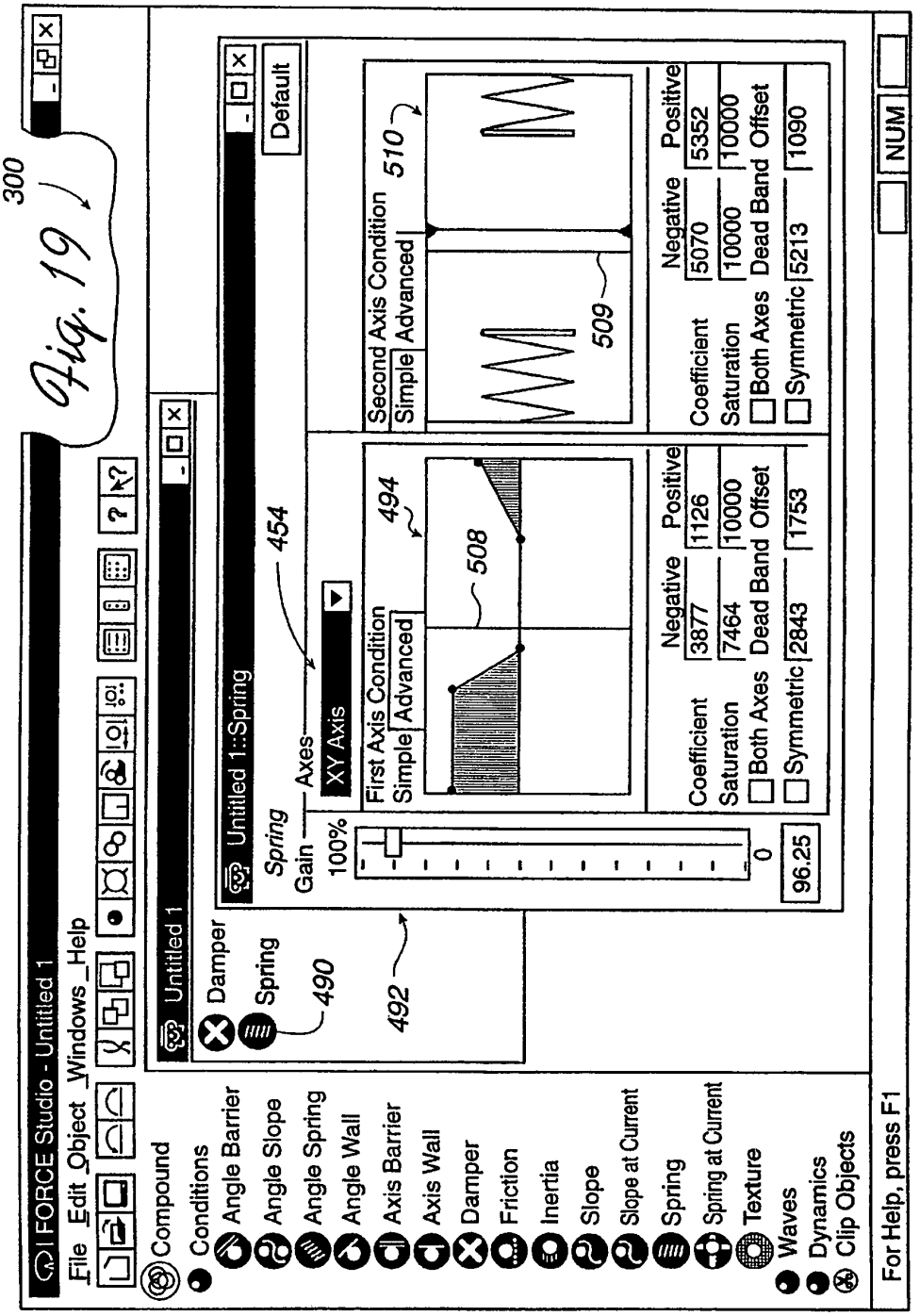
300
Fig. 19
I FORCE Studio - Untitled 1
File Edit Object Windows Help
Compound
Conditions
Angle Barrier
Angle Slope
Angle Spring
Angle Wall
Axis Barrier
Axis Wall
Damper
Friction
Inertia
Slope
Slope at Current
Spring
Spring at Current
Texture
Waves
Dynamics
Clip Objects
Untitled 1
Damper
Spring
490
Untitled 1::Spring
Default
454
Spring
Gain
Axes
XY Axis
100%
0
492
First Axis Condition
Simple
Advanced
494
508
Second Axis Condition
Simple
Advanced
510
509
Coefficient
Saturation
Both Axes
Symmetric
Negative
Positive
Dead Band
Offset
3877
1126
7464
10000
2843
1753
5070
5352
10000
10000
5213
1090
96.25
For Help, press F1
NUM

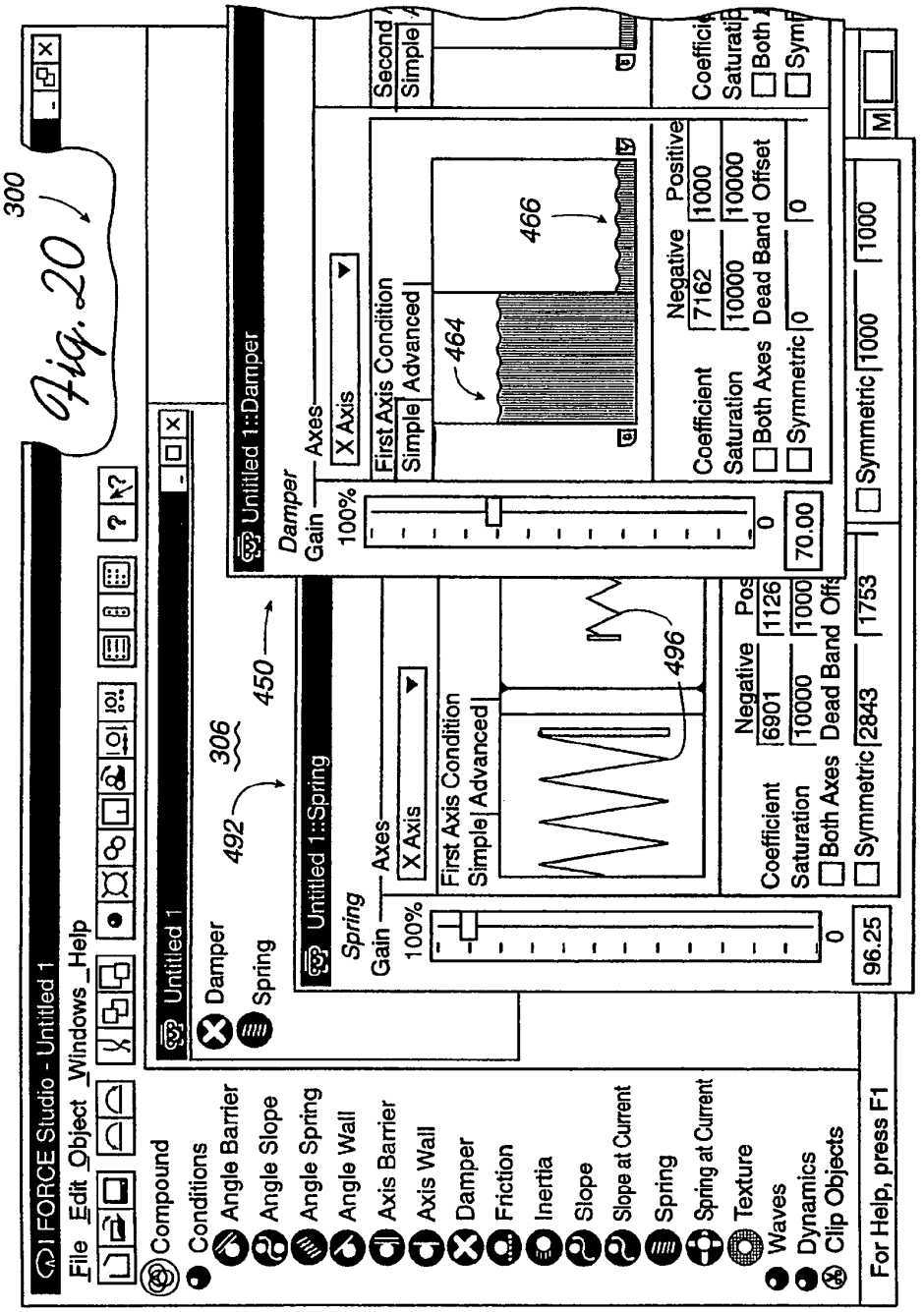
300
Fig. 20
I FORCE Studio - Untitled 1
File Edit Object Windows Help
Compound
Conditions
Angle Barrier
Angle Slope
Angle Spring
Angle Wall
Axis Barrier
Axis Wall
Damper
Friction
Inertia
Slope
Slope at Current
Spring
Spring at Current
Texture
Waves
Dynamics
Clip Objects
For Help, press F1
Untitled 1
Damper
Spring
492
306
450
Untitled 1::Spring
Spring
Gain
100%
0
96.25
Axes
X Axis
First Axis Condition
Simple
Advanced
496
Coefficient
Saturation
Both Axes
Symmetric
Negative
Dead Band
Offset
6901
10000
2843
1126
1753
Untitled 1::Damper
Damper
Gain
100%
0
70.00
Axes
X Axis
First Axis Condition
Simple
Advanced
464
466
Coefficient
Saturation
Both Axes
Symmetric
Negative
Positive
7162
10000
0
1000
10000
0
Symmetric
1000
1000
Second
Simple

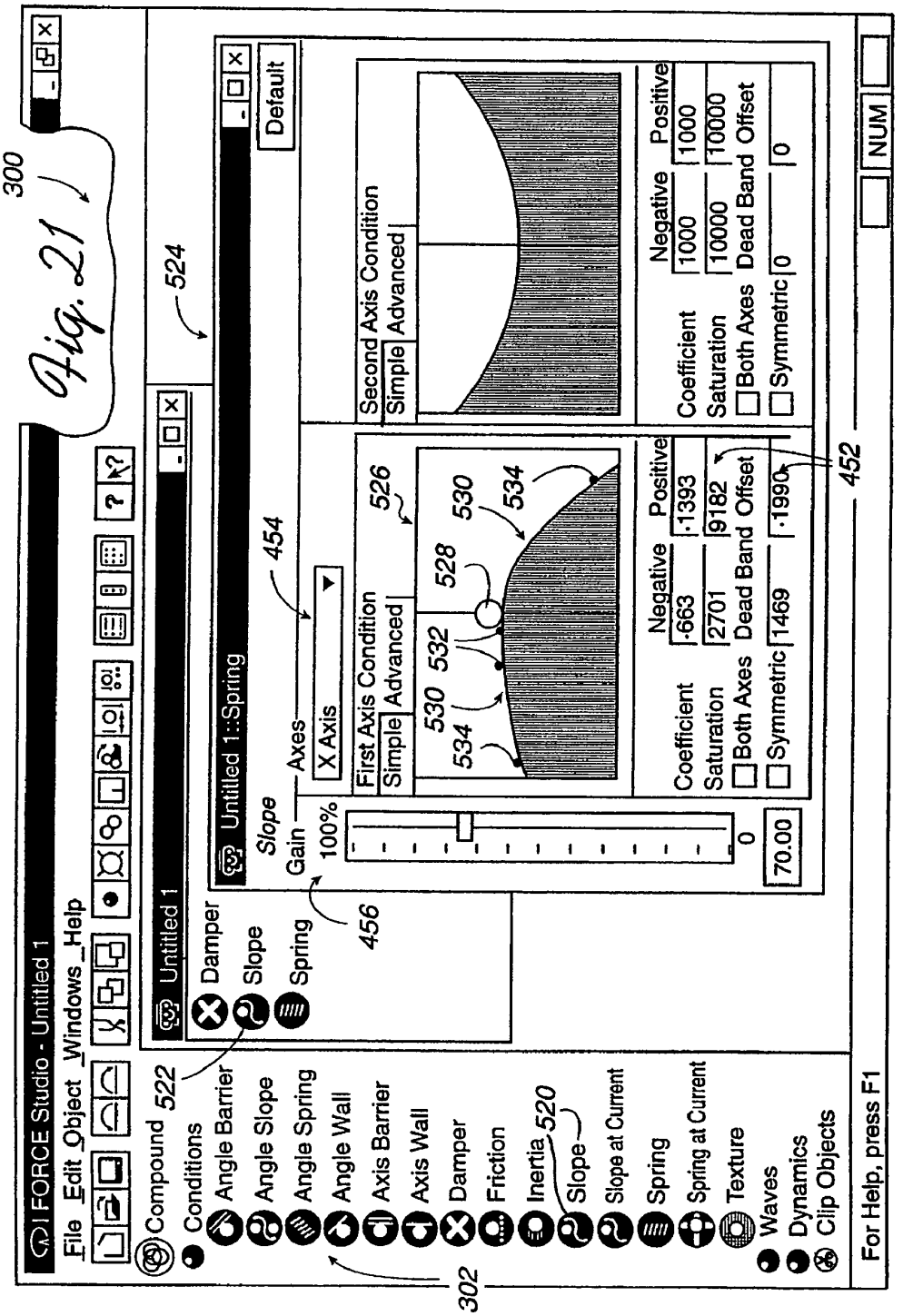
300
Fig. 21
I FORCE Studio - Untitled 1
File Edit Object Windows Help
Compound
Conditions
Angle Barrier
Angle Slope
Angle Spring
Angle Wall
Axis Barrier
Axis Wall
Damper
Friction
Inertia
Slope
Slope at Current
Spring
Spring at Current
Texture
Waves
Dynamics
Clip Objects
302
522
520
Untitled 1
Damper
Slope
Spring
524
Untitled 1::Spring
Default
Slope
Gain
100%
0
70.00
456
Axes
X Axis
454
First Axis Condition
Simple
Advanced
526
530
532
534
528
Coefficient
Saturation
Both Axes
Symmetric
Negative
Positive
·663
·1393
2701
9182
1469
·1990
Dead Band Offset
452
Second Axis Condition
Simple
Advanced
Coefficient
Saturation
Both Axes
Symmetric
Negative
Positive
1000
1000
10000
10000
0
0
Dead Band Offset
For Help, press F1
NUM

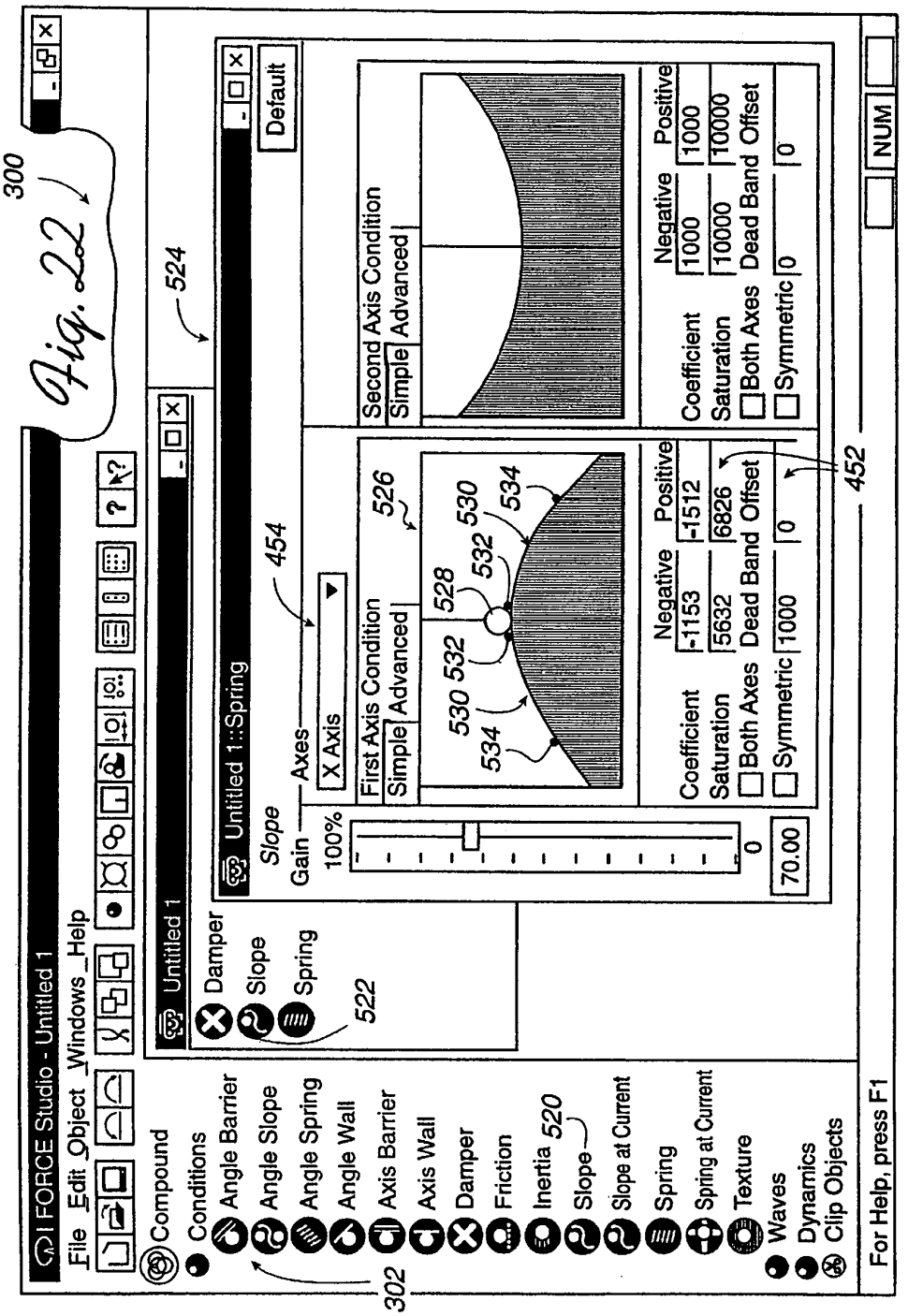
Fig. 22
300
I FORCE Studio - Untitled 1
File Edit Object Windows Help
Compound
Conditions
Angle Barrier
Angle Slope
Angle Spring
Angle Wall
Axis Barrier
Axis Wall
Damper
Friction
Inertia
Slope
Slope at Current
Spring
Spring at Current
Texture
Waves
Dynamics
Clip Objects
302
520
Untitled 1
Damper
Slope
Spring
522
524
Untitled 1::Spring
Default
Slope
Gain
Axes
X Axis
100%
0
70.00
454
First Axis Condition
Simple
Advanced
526
528
530
532
534
Second Axis Condition
Coefficient
Saturation
Both Axes
Symmetric
Negative
Positive
-1153
-1512
5632
6826
1000
0
1000
10000
452
For Help, press F1
NUM

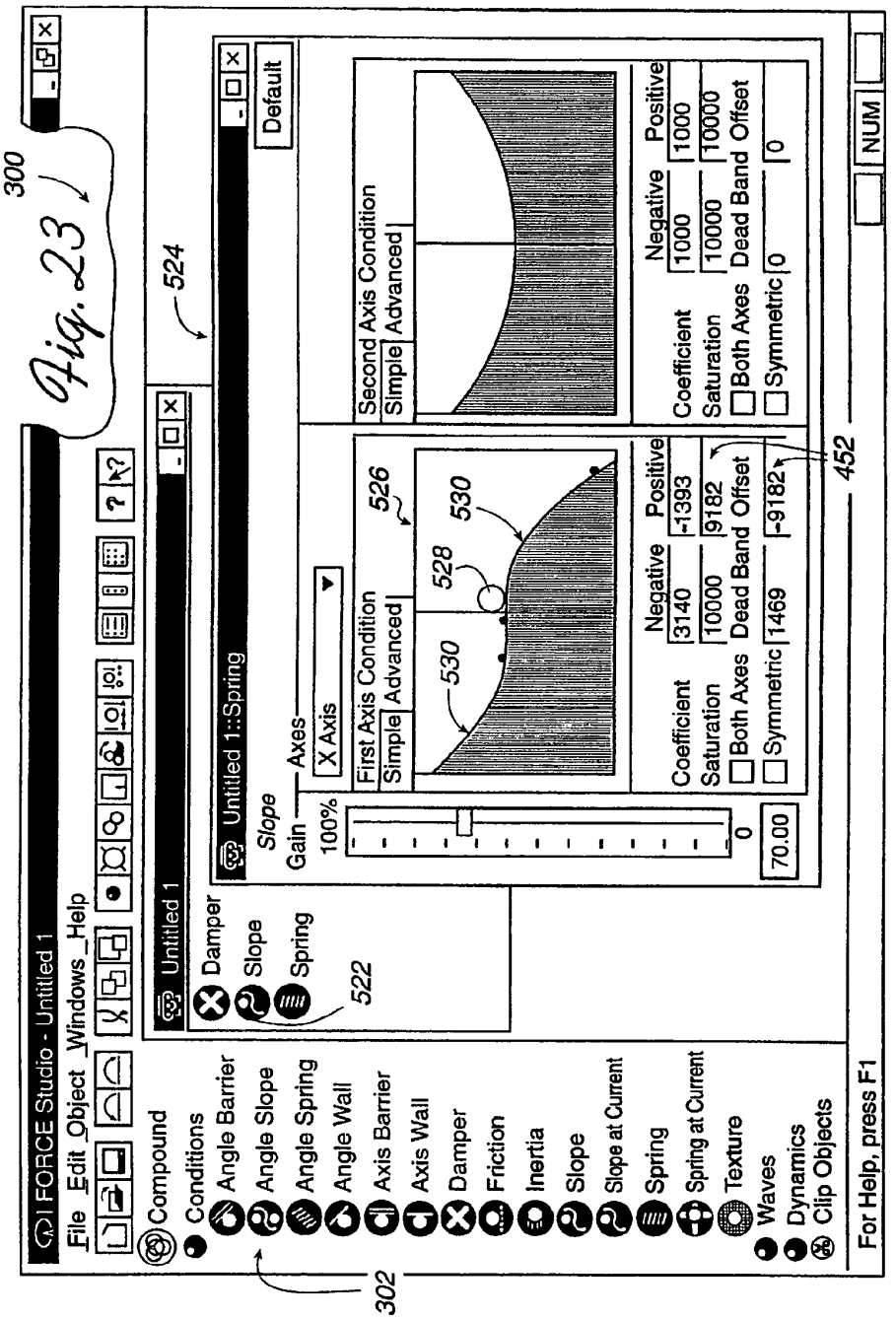
300
Fig. 23
FORCE Studio - Untitled 1
File Edit Object Windows Help
Compound
Conditions
Angle Barrier
Angle Slope
Angle Spring
Angle Wall
Axis Barrier
Axis Wall
Damper
Friction
Inertia
Slope
Slope at Current
Spring
Spring at Current
Texture
Waves
Dynamics
Clip Objects
302
Untitled 1
Damper
Slope
Spring
522
524
Untitled 1::Spring
Default
Slope
Gain
100%
Axes
X Axis
First Axis Condition
Simple
Advanced
526
528
530
530
Second Axis Condition
Simple
Advanced
Coefficient
Saturation
Both Axes
Symmetric
Negative
Positive
3140
-1393
10000
9182
1469
-9182
1000
1000
10000
10000
0
0
Dead Band
Offset
452
70.00
0
For Help, press F1
NUM

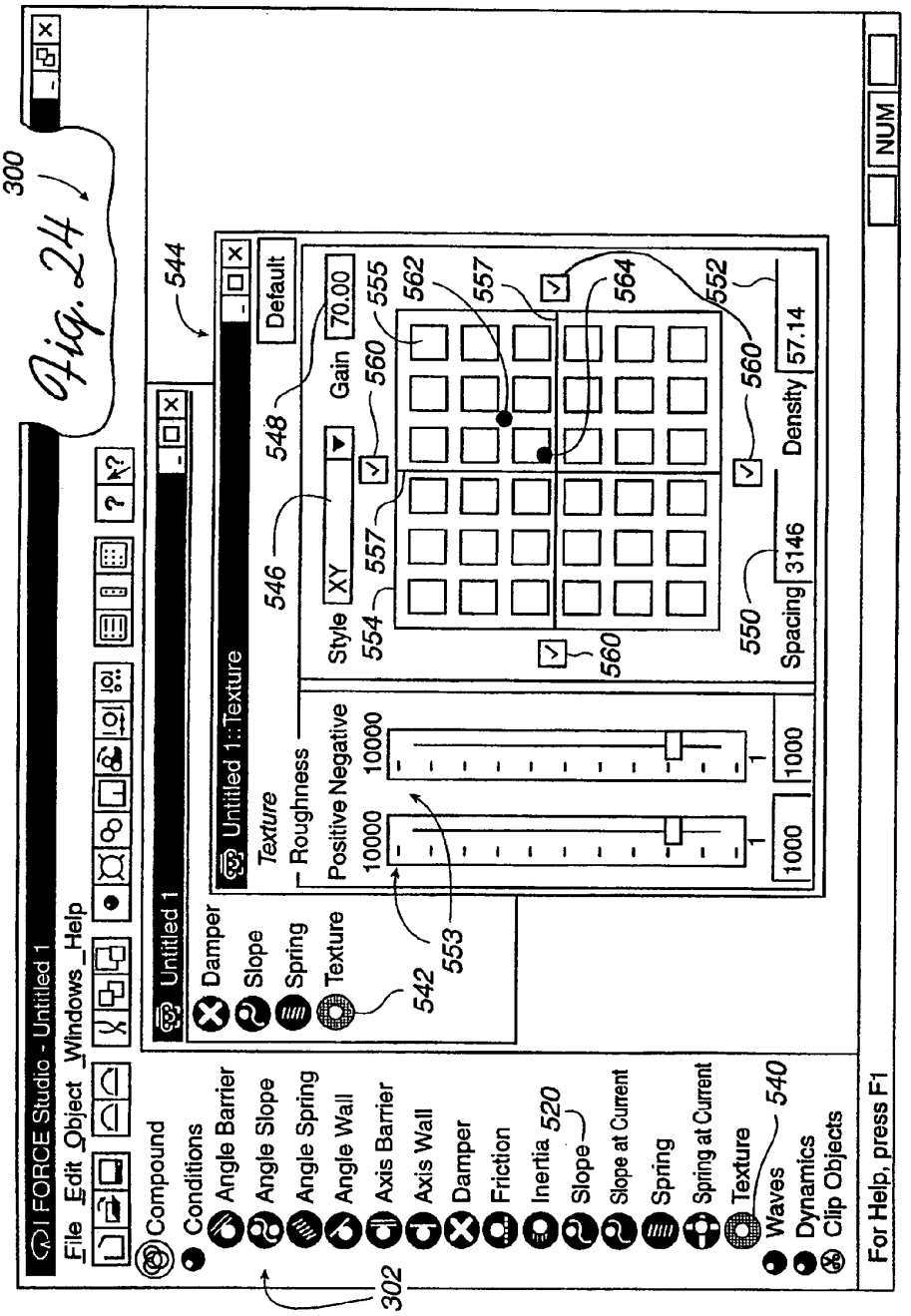
FORCE Studio - Untitled 1
File Edit Object Windows Help
Compound
Conditions
Angle Barrier
Angle Slope
Angle Spring
Angle Wall
Axis Barrier
Axis Wall
Damper
Friction
Inertia
Slope
Slope at Current
Spring
Spring at Current
Texture
Waves
Dynamics
Clip Objects
Untitled 1
Damper
Slope
Spring
Texture
Untitled 1::Texture
Default
Texture
Roughness
Positive Negative
10000
10000
1000
1000
Style
XY
Gain
70.00
Density
57.14
Spacing
3146
For Help, press F1
NUM
300
Fig. 24
302
520
540
542
544
546
548
550
552
553
554
555
557
560
562
564

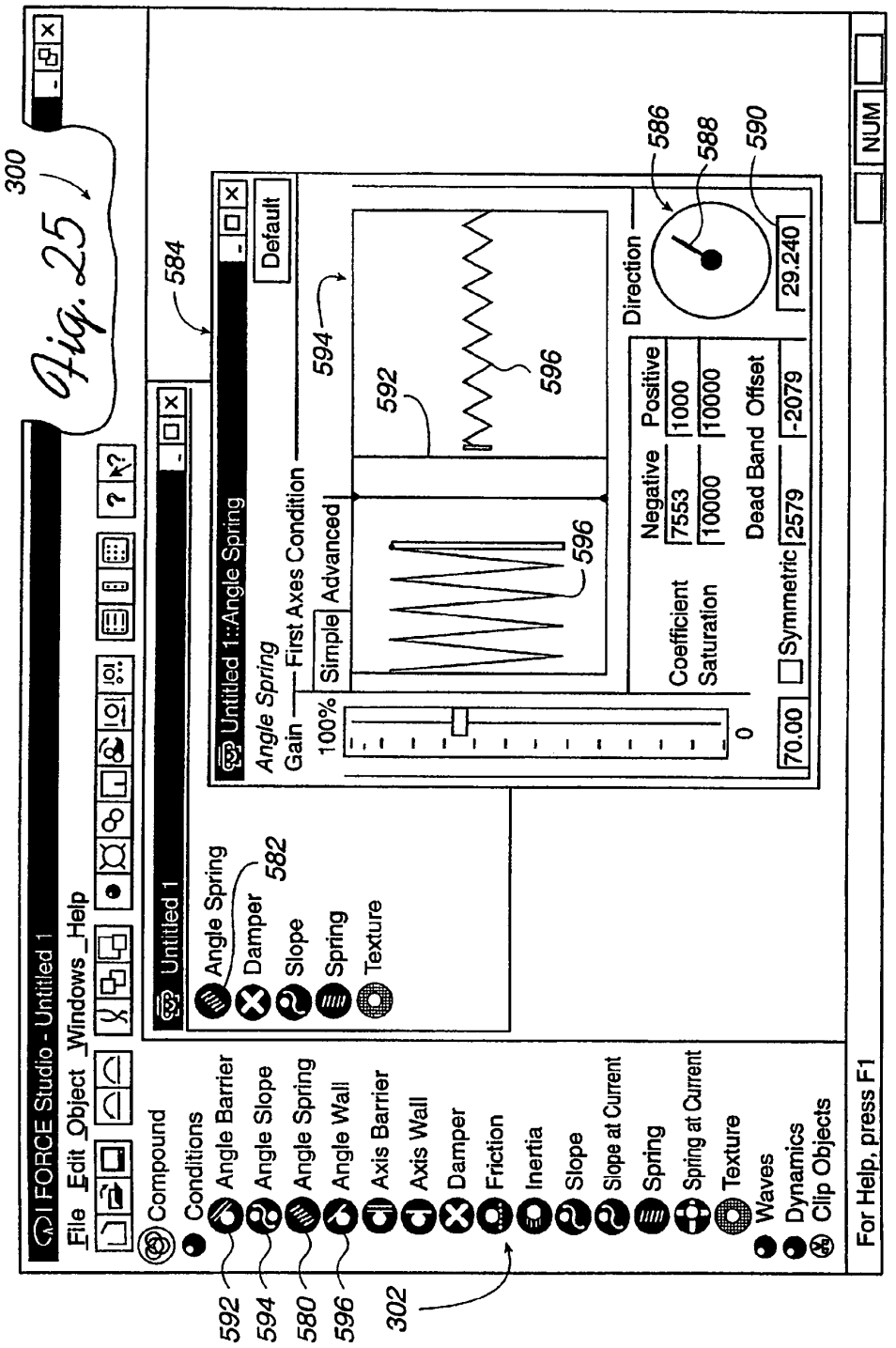
300
Fig. 25
I FORCE Studio - Untitled 1
File Edit Object Windows Help
Compound
Conditions
Angle Barrier
Angle Slope
Angle Spring
Angle Wall
Axis Barrier
Axis Wall
Damper
Friction
Inertia
Slope
Slope at Current
Spring
Spring at Current
Texture
Waves
Dynamics
Clip Objects
592
594
580
596
302
Untitled 1
Angle Spring
Damper
Slope
Spring
Texture
582
584
Untitled 1::Angle Spring
Default
Angle Spring
Gain
First Axes Condition
Simple
Advanced
100%
0
592
594
596
596
Coefficient
Saturation
Negative
Positive
7553
1000
10000
10000
Dead Band Offset
Symmetric
2579
-2079
70.00
Direction
29.240
586
588
590
NUM
For Help, press F1

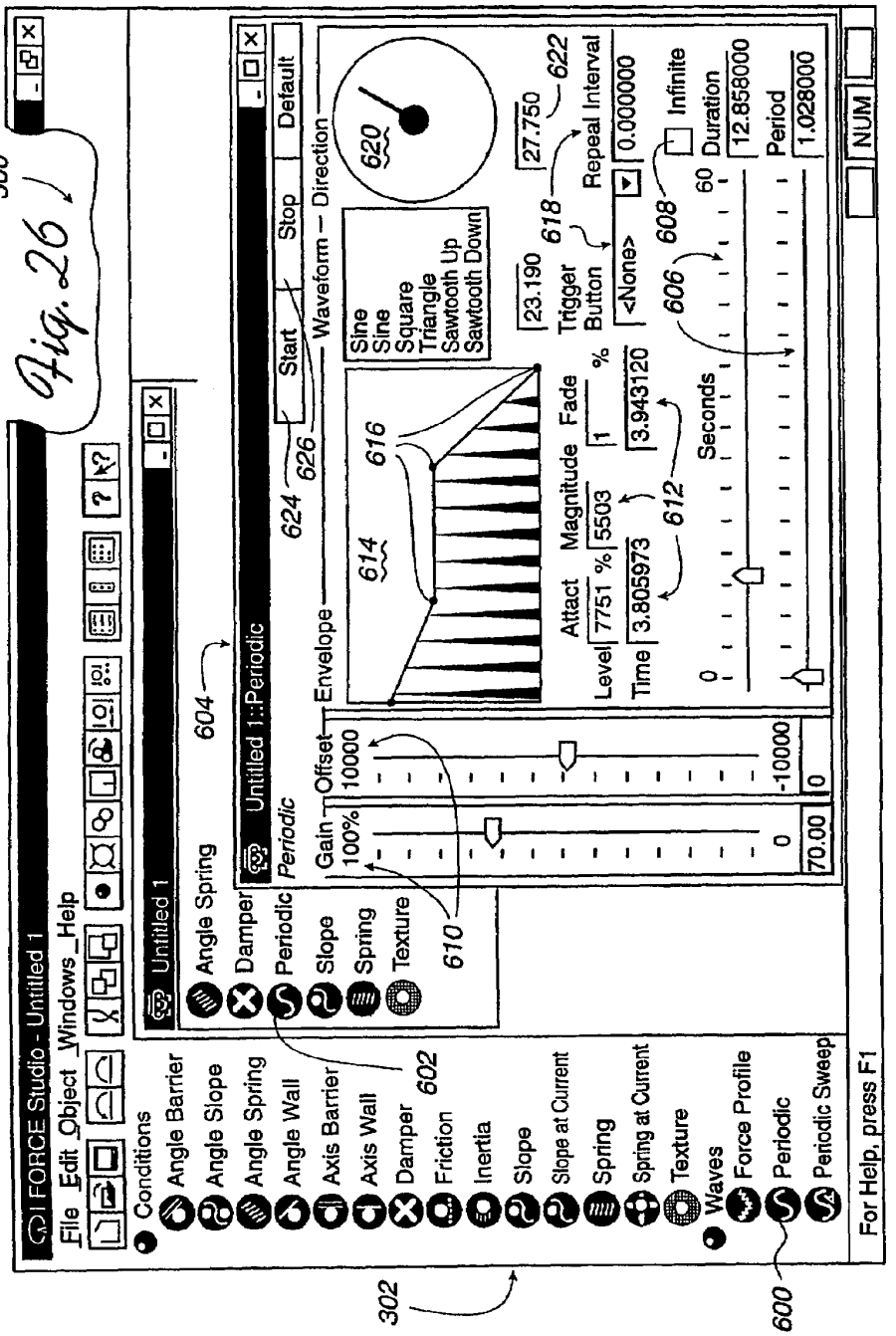
300
Fig. 26
I FORCE Studio - Untitled 1
File Edit Object Windows Help
Conditions
Angle Barrier
Angle Slope
Angle Spring
Angle Wall
Axis Barrier
Axis Wall
Damper
Friction
Inertia
Slope
Slope at Current
Spring
Spring at Current
Texture
Waves
Force Profile
Periodic
Periodic Sweep
Untitled 1
Angle Spring
Damper
Periodic
Slope
Spring
Texture
Untitled 1::Periodic
Start
Stop
Default
Waveform — Direction
Sine
Sine
Square
Triangle
Sawtooth Up
Sawtooth Down
Envelope
Gain
100%
Offset
10000
-10000
0
70.00
Attact
Level 7751 %
Time 3.805973
Magnitude
5503
Fade
1 %
3.943120
Seconds
23.190
Trigger Button
<None>
27.750
Repeat Interval
0.000000
Infinite
Duration
12.858000
Period
1.028000
NUM
For Help, press F1
302
600
602
604
606
608
610
612
614
616
618
620
622
624
626

DESIGNING FORCE SENSATIONS FOR FORCE FEEDBACK COMPUTER APPLICATIONS

CROSS REFERENCE TO RELATED APPLICATIONS

This application is a continuation of U.S. patent application Ser. No. 09/734,630, filed Dec. 11, 2000 now U.S. Pat. No. 6,697,086, on behalf of Louis B. Rosenberg et al., entitled "Designing Force Sensations For Force Feedback Computer Applications," which is a continuation-in-part of parent patent applications Ser. No. 08/566,282, filed Dec. 1, 1995, on behalf of Louis B. Rosenberg et al., entitled, "Method and Apparatus for Controlling Force Feedback Interface Systems Utilizing a Host Computer," now U.S. Pat. No. 5,734,373 and Ser. No. 08/846,011, filed Apr. 25, 1997, on behalf of Rosenberg et al., entitled, "Method and Apparatus for Designing and Controlling Force Sensations in Force Feedback Computer Applications," now U.S. Pat. No. 6,147,674 each of which assigned to the assignee of this present application, and each of which are incorporated by reference herein in their entirety.

BACKGROUND OF THE INVENTION

The present invention relates generally to interface devices for allowing humans to interface with computer systems, and more particularly to computer interface devices that allow the user to provide input to computer systems and allow computer systems to provide force feedback to the user.

Users interact with computer systems for a variety of reasons. A computer system typically displays a visual environment to a user on a display output device. Using an interface device, a user can interact with the displayed environment to perform functions and tasks on the computer, such as playing a game, experiencing a simulation or virtual reality environment, using a computer aided design system, operating a graphical user interface (GUI), or otherwise influencing events or images depicted on the screen. Common human-computer interface devices used for such interaction include a joystick, mouse, trackball, stylus, tablet, pressure-sensitive ball, or the like, that is connected to the computer system controlling the displayed environment. Typically, the computer updates the environment in response to the user's manipulation of a user-manipulatable physical object such as a joystick handle or mouse, and provides visual and audio feedback to the user utilizing the display screen and audio speakers. The computer senses the user's manipulation of the user object through sensors provided on the interface device that send locative signals to the computer. For example, the computer displays a cursor, controlled vehicle, or other graphical object in a graphical environment, where the location or motion of the graphical object is responsive to the to the motion of the user object. The user can thus control the graphical object by moving the user object.

In some interface devices, tactile and/or haptic feedback is also provided to the user, more generally known as "force feedback." These types of interface devices can provide physical sensations which are felt by the user manipulating a user manipulable object of the interface device. For example, the Force-FX joystick controller from CH Products, Inc. and Immersion Corporation may be connected to a computer and provides forces to a user of the controller. Other systems might use a force feedback mouse controller.

One or more motors or other actuators are coupled to the joystick or other user object and are connected to the controlling computer system. The computer system controls forces on the joystick in conjunction and coordinated with displayed events and interactions by sending control signals or commands to the actuators. The computer system can thus convey physical force sensations to the user in conjunction with other supplied feedback as the user is grasping or contacting the joystick or other object of the interface device. For example, when the user moves the manipulatable object and causes a displayed cursor to interact with a different displayed graphical object, the computer can issue a command that causes the actuator to output a force on the user object, conveying a feel sensation to the user.

A problem with the prior art development of force feedback sensations in software is that the programmer of force feedback applications does not have an intuitive sense as to how forces will feel when adjusted in certain ways, and thus must go to great effort to develop characteristics of forces that are desired for a specific application. For example, a programmer may wish to create a specific spring and damping force sensation between two graphical objects, where the force sensation has a particular stiffness, play, offset, etc. In current force feedback systems, the programmer must determine the parameters and characteristics of the desired force by a brute force method, by simply setting parameters, testing the force, and adjusting the parameters in an iterative fashion. This method is cumbersome because it is often not intuitive how a parameter will affect the feel of a force as it is actually output on the user object; the programmer often may not even be close to the desired force sensation with initial parameter settings. Other types of forces may not be intuitive at all, such as a spring having a negative stiffness, and thus force sensation designers may have a difficult time integrating these types of sensations into software applications. Thus, a tool is needed for assisting the programmer or developer in intuitively and easily setting force feedback characteristics to provide desired force sensations.

SUMMARY OF THE INVENTION

The present invention is directed to designing force sensations output by a force feedback interface device. A controlling host computer provides a design interface tool that allows intuitive and simple design of a variety of force sensations.

More particularly, a design interface for designing force sensations for use with a force feedback interface device is described. The force sensation design interface is displayed on a display device of a host computer. Input from a user is received in the interface, where the input selects a type of force sensation to be commanded by a host computer and output by a force feedback interface device. Input, such as parameters, is then received from a user which designs and defines physical characteristics of the selected force sensation. A graphical representation of the characterized force sensation is displayed on a display device of the host computer. The graphical representation provides the user with a visual demonstration of a feel of the characterized force sensation such that said user can view an effect of parameters on said force sensation. The characterized force sensation is output to a user manipulatable object of the force feedback interface device such that the user can feel the designed force sensation. The graphical representation is updated in conjunction with the force sensation being output on the user object, promoting further understanding of the effects of the characterization on the output force sensation.

The user can preferably input additional changes to the characterized forces sensation after experiencing the feel of the sensation and feel the changed force sensation. Thus, in an iterative process, the user can design effective force sensations through actual experience of those sensations. The user can preferably store the characterization or parameters of the designed force sensation to a storage medium that can be accessed by other programs on the host computer or other computers. Other programs that control force feedback can thus utilize the designed force sensation in applications such as games, simulations, or graphical interfaces.

A wide variety of types of force sensations can be designed in the interface tool of the present invention. Described types include conditions, effects, and dynamics. Some force sensations include a simple mode of graphical representation that is more intuitive but offers less control over parameters that an advanced mode. In the advanced mode, a force versus user object motion profile is displayed, where the user may adjust parameters of the selected force sensation by dragging displayed control points of the profile. Represented force sensations include a damping condition, a spring condition, a slope condition, a texture condition, and periodic waves. The user can also design compound force sensations including multiple single force sensations. For example, a preferred graphical representation of a slope condition includes a hill image and a ball image, where the user moves the ball with the user object. The force on the ball provided by a negative spring stiffness is intuitively analogized by the visual representation of the ball rolling down the hill and feeling the appropriate forces. In one embodiment, the force feedback interface device includes a microprocessor separate from the host computer system. The microprocessor receives commands from the host computer system, reads sensors of the interface device and reports positions of said user object to the host computer, and commands actuators of the interface device to output the force sensation on the user object.

The present invention advantageously provides a simple, easy-to-use design interface tool for designing force feedback sensations. Given the large variety of possible force sensations and the often unexpected results when modifying the several parameters of force sensations, the design interface tool of the present invention meets the needs of force sensation designers that wish to create force sensations as close to their needs as possible. The graphical design interface of the present invention allows a force sensation programmer or developer to easily and intuitively design force sensations, conveniently experience the designed force sensations, and visually understand the effect of changes to different aspects of the force sensations.

These and other advantages of the present invention will become apparent to those skilled in the art upon a reading of the following specification of the invention and a study of the several figures of the drawing.

BRIEF DESCRIPTION OF THE DRAWINGS

FIG. **1** is a block diagram of a system for controlling a force feedback interface device of the present invention;

FIGS. **2***a–b* are top plan and side elevational views, respectively, of a first embodiment of a mechanism for interfacing a user manipulatable object with the force feedback device of FIG. **1**;

FIG. **3** is a perspective view of a second embodiment of a mechanism for interfacing a user manipulatable object with the force feedback device of FIG. **1**;

FIG. **4** is a block diagram illustrating a preferred functionality of the force feedback system of FIG. **1**;

FIG. **5** is a diagram of a displayed interface of the present invention for designing force sensations;

FIG. **6** is a diagram of the interface of FIG. **5** in which a design window for a spring condition is displayed;

FIGS. **7***a–c* are diagrams of displayed graphical representations of a spring condition;

FIG. **8** is a diagram of a displayed graphical representation of a texture condition;

FIGS. **9***a* and **9***b* are displayed graphical representations of a wall condition;

FIG. **10** is a diagram of the interface of FIG. **5** in which a design window for a periodic effect is displayed;

FIG. **11** is a diagram of the interface of FIG. **5** in which a design window for a periodic sweep effect is displayed;

FIGS. **12**–**13** are diagrams of the interface of FIG. **5** in which a simple mode design window for a damping condition is displayed;

FIGS. **14**–**15** are diagrams of the interface of FIG. **5** in which an advanced mode design window for a damping condition is displayed;

FIGS. **16**–**17** are diagrams of the interface of FIG. **5** in which a simple mode design window for a spring condition is displayed;

FIGS. **18**–**19** are diagrams of the interface of FIG. **5** in which an advanced mode design window for a spring condition is displayed;

FIG. **20** is a diagram of the interface of FIG. **5** in which design windows for a compound force sensation are displayed;

FIGS. **21**–**23** are diagrams of the interface of FIG. **5** in which a design window for a slope condition is displayed;

FIG. **24** is a diagram of the interface of FIG. **5** in which a design window for a texture condition is displayed;

FIG. **25** is a diagram of the interface of FIG. **5** in which a design window for an angle spring condition is displayed; and

FIG. **26** is a diagram of the interface of FIG. **5** in which a design window for a periodic wave is displayed.

DETAILED DESCRIPTION OF PREFERRED EMBODIMENTS

FIG. **1** is a block diagram illustrating a force feedback interface system **10** of the present invention controlled by a host computer system. Interface system **10** includes a host computer system **12** and an interface device **14**.

Host computer system **12** is preferably a personal computer, such as an IBM-compatible or Macintosh personal computer, or a workstation, such as a SUN or Silicon Graphics workstation. For example, the host computer system can a personal computer which operates under the MS-DOS or Windows operating systems in conformance with an IBM PC AT standard. Alternatively, host computer system **12** can be one of a variety of home video game systems commonly connected to a television set, such as systems available from Nintendo, Sega, or Sony. In other embodiments, home computer system **12** can be a television "set top box" or a "network computer" which can be used, for example, to provide interactive computer functions to users over networks.

In the described embodiment, host computer system **12** implements a host application program with which a user **22** is interacting via peripherals and interface device **14**. For example, the host application program can be a video game, medical simulation, scientific analysis program, operating

system, graphical user interface, or other application program that utilizes force feedback. Typically, the host application provides images to be displayed on a display output device, as described below, and/or other feedback, such as auditory signals.

Host computer system **12** preferably includes a host microprocessor **16**, random access memory (RAM) **17**, read-only memory (ROM) **19**, input/output (I/O) electronics **21**, a clock **18**, a display screen **20**, and an audio output device **21**. Host microprocessor **16** can include a variety of available microprocessors from Intel, AMD, Motorola, or other manufacturers. Microprocessor **16** can be single microprocessor chip, or can include multiple primary and/or co-processors. Microprocessor preferably retrieves and stores instructions and other necessary data from RAM **17** and ROM **19**, as is well known to those skilled in the art. In the described embodiment, host computer system **12** can receive locative data or a sensor signal via a bus **24** from sensors of interface device **14** and other information. Microprocessor **16** can receive data from bus **24** using I/O electronics **21**, and can use I/O electronics to control other peripheral devices. Host computer system **12** can also output a "force command" to interface device **14** via bus **24** to cause force feedback for the interface device.

Clock **18** is a standard clock crystal or equivalent component used by host computer system **12** to provide timing to electrical signals used by microprocessor **16** and other components of the computer system. Clock **18** is accessed by host computer system **12** in the force feedback control process, as described subsequently.

Display screen **20** is coupled to host microprocessor **16** by suitable display drivers and can be used to display images generated by host computer system **12** or other computer systems. Display screen **20** can be a standard display screen, CRT, flat-panel display, 3-D goggles, or any other visual interface. In a described embodiment, display screen **20** displays images of a simulation or game environment. In other embodiments, other images can be displayed. For example, images describing a point of view from a first-person perspective can be displayed, as in a virtual reality simulation or game. Or, images describing a third-person perspective of objects, backgrounds, etc. can be displayed. A user **22** of the host computer **12** and interface device **14** can receive visual feedback by viewing display screen **20**.

Herein, computer **12** may be referred as displaying computer or graphical "objects" or "entities". These computer objects are not physical objects, but is a logical software unit collections of data and/or procedures that may be displayed as images by computer **12** on display screen **20**, as is well known to those skilled in the art. For example, a cursor or a third-person view of a car might be considered player-controlled computer objects that can be moved across the screen. A displayed, simulated cockpit of an aircraft might also be considered an "object" , or the simulated aircraft can be considered a computer-implemented "entity".

Audio output device **21**, such as speakers, is preferably coupled to host microprocessor **16** via amplifiers, filters, and other circuitry well known to those skilled in the art and provides sound output to user **22** from the host computer **18**. Other types of peripherals can also be coupled to host processor **16**, such as storage devices (hard disk drive, CD ROM drive, floppy disk drive, etc.), printers, and other input and output devices.

An interface device **14** is coupled to host computer system **12** by a bi-directional bus **24**. The bi-directional bus sends signals in either direction between host computer system **12** and the interface device. Herein, the term "bus" is intended to generically refer to an interface such as between host computer **12** and microprocessor **26** which typically includes one or more connecting wires, wireless connection, or other connections and that can be implemented in a variety of ways. In the preferred embodiment, bus **24** is a serial interface bus providing data according to a serial communication protocol. An interface port of host computer system **12**, such as an RS232 or Universal Serial Bus (USB) serial interface port, connects bus **24** to host computer system **12**. Other standard serial communication protocols can also be used in the serial interface and bus **24**, such as RS-422, MIDI, or other protocols well known to those skilled in the art. The USB can also source power to drive peripheral devices and may also provide timing data that is encoded along with differential data.

Alternatively, a parallel port of host computer system **12** can be coupled to a parallel bus **24** and communicate with interface device using a parallel protocol, such as SCSI or PC Parallel Printer Bus. Also, bus **24** can be connected directly to a data bus of host computer system **12** using, for example, a plug-in card and slot or other access of computer **12**. Bus **24** can be implemented within a network such as the Internet or LAN; or, bus **24** can be a channel such as the air, etc. for wireless communication. In another embodiment, an additional bus **25** can be included to communicate between host computer system **12** and interface device **14**. For example, bus **24** can be coupled to the standard serial port of host computer **12**, while an additional bus **25** can be coupled to a second port of the host computer system, such as a "game port." The two buses **24** and **25** can be used simultaneously to provide a increased data bandwidth.

Interface device **14** includes a local microprocessor **26**, sensors **28**, actuators **30**, a user object **34**, optional sensor interface **36**, an optional actuator interface **38**, and other optional input devices **39**. Interface device **14** may also include additional electronic components for communicating via standard protocols on bus **24**. In the preferred embodiment, multiple interface devices **14** can be coupled to a single host computer system **12** through bus **24** (or multiple buses **24**) so that multiple users can simultaneously interface with the host application program (in a multi-player game or simulation, for example). In addition, multiple players can interact in the host application program with multiple interface devices **14** using networked host computers **12**, as is well known to those skilled in the art.

Local microprocessor **26** is coupled to bus **24** and is preferably included within the housing of interface device **14** to allow quick communication with other components of the interface device. Processor **26** is considered local to interface device **14**, where "local" herein refers to processor **26** being a separate microprocessor from any processors in host computer system **12**. "Local" also preferably refers to processor **26** being dedicated to force feedback and sensor I/O of interface device **14**, and being closely coupled to sensors **28** and actuators **30**, such as within the housing for interface device or in a housing coupled closely to interface device **14**. Microprocessor **26** can be provided with software instructions to wait for commands or requests from computer host **16**, decode the command or request, and handle/control input and output signals according to the command or request. In addition, processor **26** preferably operates independently of host computer **16** by reading sensor signals and calculating appropriate forces from those sensor signals, time signals and stored or relayed instructions selected in accordance with a host command. Suitable microprocessors for use as local microprocessor **26** include the MC68HC711E9 by Motorola, the PIC16C74 by Microchip,

and the 82930AX by Intel Corp., for example. Microprocessor **26** can include one microprocessor chip, or multiple processors and/or co-processor chips. In other embodiments, microprocessor **26** can include digital signal processor (DSP) capability.

Microprocessor **26** can receive signals from sensors **28** and provide signals to actuators **30** of the interface device **14** in accordance with instructions provided by host computer **12** over bus **24**. For example, in a preferred local control embodiment, host computer system **12** provides high level supervisory commands to microprocessor **26** over bus **24**, and microprocessor **26** manages low level force control loops to sensors and actuators in accordance with the high level commands and independently of the host computer **18**. This operation is described in greater detail with respect to FIG. **4**. Microprocessor **26** can also receive commands from any other input devices **39** included on interface apparatus **14** and provides appropriate signals to host computer **12** to indicate that the input information has been received and any information included in the input information.

Local memory **27**, such as RAM and/or ROM, is preferably coupled to microprocessor **26** in interface device **14** to store instructions for microprocessor **26** and store temporary and other data. In addition, a local clock **29** can be coupled to the microprocessor **26** to provide timing data, similar to system clock **18** of host computer **12**; the timing data might be required, for example, to compute forces output by actuators **30** (e.g., forces dependent on calculated velocities or other time dependent factors). Timing data for microprocessor **26** can be alternatively retrieved from a USB signal on bus **24**.

In the preferred embodiment, sensors **28**, actuators **30**, and microprocessor **26**, and other related electronic components are included in a housing for interface device **14**, to which user object **34** is directly or indirectly coupled. Alternatively, microprocessor **26** and/or other electronic components of interface device **14** can be provided in a separate housing from user object **34**, sensors **28**, and actuators **30**. Also, additional mechanical structures may be included in interface device **14** to provide object **34** with desired degrees of freedom. Embodiments of mechanisms are described with reference to FIGS. **2***a–b* and **3**.

Sensors **28** sense the position, motion, and/or other characteristics of a user object **34** of the interface device **14** along one or more degrees of freedom and provide signals to microprocessor **26** including information representative of those characteristics. Typically, a sensor **28** is provided for each degree of freedom along which object **34** can be moved. Alternatively, a single compound sensor can be used to sense position or movement in multiple degrees of freedom. An example of sensors suitable for several embodiments described herein are digital optical encoders, which sense the change in position of an object about a rotational axis and provide digital signals indicative of the change in position. A suitable optical encoder is the "Softpot" from U.S. Digital of Vancouver, Wash. Linear optical encoders, potentiometers, optical sensors, velocity sensors, acceleration sensors, strain gauge, or other types of sensors can also be used, and either relative or absolute sensors can be provided.

Sensors **28** provide an electrical signal to an optional sensor interface **36**, which can be used to convert sensor signals to signals that can be interpreted by the microprocessor **26** and/or host computer system **12**. Digital optical encoders, for example, can be used. If analog sensors **28** are used, an analog to digital converter (ADC) can convert the analog signal to a digital signal that is received and interpreted by microprocessor **26** and/or host computer system **12**. In alternate embodiments, sensor signals from sensors **28** can be provided directly to host computer system **12** as shown by bus **24'**, bypassing microprocessor **26**.

Actuators **30** transmit forces to user object **34** of the interface device **14** in one or more directions along one or more degrees of freedom in response to signals received from microprocessor **26**. Typically, an actuator **30** is provided for each degree of freedom along which forces are desired to be transmitted. Actuators **30** can include two types: active actuators and passive actuators. Active actuators include linear current control motors, stepper motors, pneumatic/hydraulic active actuators, a torquer (motor with limited angular range), a voice coil actuators, and other types of actuators that transmit a force to move an object. For example, active actuators can drive a rotational shaft about an axis in a rotary degree of freedom, or drive a linear shaft along a linear degree of freedom. Passive actuators can also be used for actuators **30**. Magnetic particle brakes, friction brakes, or pneumatic/hydraulic passive actuators can be used in addition to or instead of a motor to generate a damping resistance or friction in a degree of motion.

Actuator interface **38** can be optionally connected between actuators **30** and microprocessor **26**. Interface **38** converts signals from microprocessor **26** into signals appropriate to drive actuators **30**. Interface **38** can include power amplifiers, switches, digital to analog controllers (DACs), analog to digital controllers (ADC's), and other components, as is well known to those skilled in the art. In alternate embodiments, interface **38** circuitry can be provided within microprocessor **26**, in actuators **30**, or in host computer **12**.

Other input devices **39** can optionally be included in interface device **14** and send input signals to microprocessor **26** or to host processor **16**. Such input devices can include buttons, dials, switches, levers, or other mechanisms. For example, in embodiments where user object **34** is a joystick, other input devices can include one or more buttons provided, for example, on the joystick handle or base and used to supplement the input from the user to a game or simulation. The operation of such input devices is well known to those skilled in the art.

Power supply **40** can optionally be coupled to actuator interface **38** and/or actuators **30** to provide electrical power. Power supply **40** can be included within the housing of interface device **14**, or be provided as a separate component. Alternatively, interface device **14** can draw power from the USB (if used) and thus have no (or reduced) need for power supply **40**. Also, power from the USB can be stored and regulated by interface device **14** and thus used when needed to drive actuators **30**. For example, power can be stored over time in a capacitor or battery and then immediately dissipated to provide a jolt force to the user object **34**.

Safety switch **41** is optionally included in interface device **14** to provide a mechanism to allow a user to deactivate actuators **30**, or require a user to activate actuators **30**, for safety reasons. In the preferred embodiment, the user must continually activate or close safety switch **41** during operation of interface device **14** to enable the actuators **30**. If, at any time, the safety switch is deactivated (opened), power from power supply **40** is cut to actuators **30** (or the actuators are otherwise disabled) as long as the safety switch is opened. For example, one embodiment of safety switch is an optical switch located on user object **34** or on a convenient surface of a housing of interface device **14**. The switch is closed when the user covers the optical switch with a hand or finger, so that the actuators **30** will function as long as the user covers the switch. Safety switch **41** can also provide a

signal directly to host computer **12**. Other types of safety switches **41** can be provided in other embodiments, such as an electrostatic contact switch, a button or trigger, a hand weight safety switch, etc. If the safety switch **41** is not provided, actuator interface **38** can be directly coupled to actuators **30**.

User manipulable object **34** ("user object") is a physical object, device or article that may be grasped or otherwise contacted or controlled by a user and which is coupled to interface device **14**. By "grasp", it is meant that users may releasably engage a grip portion of the object in some fashion, such as by hand, with their fingertips, or even orally in the case of handicapped persons. The user **22** can manipulate and move the object along provided degrees of freedom to interface with the host application program the user is viewing on display screen **20**. Object **34** can be a joystick, mouse, trackball, stylus (e.g. at the end of a linkage), steering wheel, sphere, medical instrument (laparoscope, catheter, etc.), pool cue (e.g. moving the cue through actuated rollers), hand grip, knob, button, or other article.

FIG. **2***a* is a top plan view and FIG. **2***b* is a. side elevational view of one embodiment of an interface apparatus including a mechanical apparatus **70** and user object **34**, in which electromagnetic voice coil actuators are used to provide forces to the user object. Such voice coil actuators are described in greater detail in patent application Ser. No. 08/560,091 now U.S. Pat. No. 5,805,140, incorporated by reference herein. Interface apparatus **70** provides two linear degrees of freedom to user object **34** so that the user can translate object **12** in a planar workspace along the X axis, along the Y axis, or along both axes (diagonal movement). This embodiment is thus preferred for use with a mouse, puck, or similar user object **34**.

Apparatus **70** includes user object **34** and a board **72** that includes voice coil actuators **74***a* and **74***b* and guides **80**. Object **34** is rigidly coupled to board **72**, which, for example, can be a circuit board etched with conductive materials. Board **72** is positioned in a plane substantially parallel to the X-Y plane and floats. Board **72** and object **34** may thus be translated along axis X and/or axis Y, shown by arrows **78***a* and **78***b* and guided by guides **80**, thus providing the object **34** with linear degrees of freedom. Board **72** is provided in a substantially right-angle orientation having one extended portion **82***a* at 90 degrees from the other extended portion **82***b*.

Voice coil actuators **74***a* and **74***b* are positioned on board **72** such that one actuator **74***a* is provided on portion **82***a* and the other actuator **74***b* is provided on portion **82***b*. Wire coil **84***a* of actuator **74***a* is coupled to portion **82***a* of board **72** and includes at least two loops etched onto board **72**, preferably as a printed circuit board trace. Terminals **86***a* are coupled to actuator drivers, so that host computer **12** or microprocessor **26** can control the direction and/or magnitude of the current in wire coil **84***a*. Voice coil actuator **74***a* also includes a magnet assembly **88***a*, which preferably includes four magnets **90** and is grounded, where coil **84***a* is positioned between opposing polarities of the magnet.

The magnetic fields from magnets **90** interact with a magnetic field produced from wire coil **84***a* when current is flowed in coil **84***a* to produce forces. As an electric current I is flowed through the coil **84***a* via electrical connections **86***a*, a magnetic field is generated from the current and configuration of coil **84***a*. The magnetic field from the coil then interacts with the magnetic fields generated by magnets **90** to produce a force along axis Y. The magnitude or strength of the force is dependent on the magnitude of the current that is applied to the coil, the number of loops in the coil, and the magnetic field strength of the magnets. The direction of the force depends on the direction of the current in the coil. A voice coil actuator can be provided for each degree of freedom of the mechanical apparatus to which force is desired to be applied.

Limits **91** or physical stops can be positioned at the edges of the board **72** to provide a movement limit. Voice coil actuator **74***b* operates similarly to actuator **74***a*. In yet other embodiments, the translatory motion of board **72** along axes X and Y can be converted to two rotary degrees of freedom, or additional degrees of freedom can be similarly provided with voice-coil actuation, such as an up-down or spin degrees of freedom or spin along/about a z-axis.

Voice coil actuator **74***a* can also be used as a sensor to sense the velocity, position, and or acceleration of board **72** along axis Y. Motion of coil **84***a* along axis Y within the magnetic field of magnets **90** induces a voltage across the coil **84***a*, and this voltage can be sensed. This voltage is proportional to the velocity of the coil and board **72** along axis Y. From this derived velocity, acceleration or position of the board **72** can be derived. In other embodiments, separate digital sensors may be used to sense the position, motion, etc. of object **34** in low cost interface devices. For example, a lateral effect photo diode sensor **92** can be used, including a rectangular detector **94** positioned in a plane parallel to the X-Y plane onto which a beam of energy **96** is emitted from a grounded emitter **98**. The position of the board **72** and object **34** can be determined by the location of the beam **96** on the detector.

FIG. **3** is a perspective view of another embodiment of a mechanical apparatus **100** suitable for providing mechanical input and output to host computer system **12**. Apparatus **100** is more appropriate for a joystick or similar user object **34**. Apparatus **100** includes gimbal mechanism **140**, sensors **28** and actuators **30**. User object **34** is shown in this embodiment as a joystick having a grip portion **162**.

Gimbal mechanism **140** provides two rotary degrees of freedom to object **34**. A gimbal device as shown in FIG. **3** is described in greater detail in patent applications Ser. Nos. 08/374,288 and 08/400,233 now U.S. Pat. Nos. 5,731,804 and 5,767,839, both hereby incorporated by reference in their entirety. Gimbal mechanism **140** provides support for apparatus **160** on grounded surface **142**, such as a table top or similar surface. Gimbal mechanism **140** is a five-member linkage that includes a ground member **144**, extension members **146***a* and **146***b*, and central members **148***a* and **148***b*. Gimbal mechanism **140** also includes capstan drive mechanisms **164**.

Ground member **144** includes a base member **166** and vertical support members **168**. Base member **166** is coupled to grounded surface **142**. A vertical support member **168** is coupled to each of these outer surfaces of base member **166** such that vertical members **168** are in substantially 90-degree relation with each other. Ground member **144** is coupled to a base or surface which provides stability for mechanism **140**. The members of gimbal mechanism **140** are rotatably coupled to one another through the use of bearings or pivots. Extension member **146***a* is rigidly coupled to a capstan drum **170** and is rotated about axis A as capstan drum **170** is rotated. Likewise, extension member **146***b* is rigidly coupled to the other capstan drum **170** and can be rotated about axis B. Central drive member **148***a* is rotatably coupled to extension member **146***a* and can rotate about floating axis D, and central link member **148***b* is rotatably coupled to an end of extension member **146***b* at a center point P and can rotate about floating axis E. Central drive member **148***a* and central link member **148***b* are rotatably

coupled to each other at the center of rotation of the gimbal mechanism, which is the point of intersection P of axes A and B. Bearing **172** connects the two central members **148***a* and **148***b* together at the intersection point P.

Gimbal mechanism **140** is formed as a five member closed chain such that each end of one member is coupled to the end of a another member. Gimbal mechanism **140** provides two degrees of freedom to an object **34** positioned at or near to the center point P of rotation, where object **34** can be rotated about axis A and/or B. In alternate embodiments, object **34** can also be rotated or translated in other degrees of freedom, such as a linear degree of freedom along axis C or a rotary "spin" degree of freedom about axis C, and these additional degrees of freedom can be sensed and/or actuated. In addition, a capstan drive mechanism **164** can be coupled to each vertical member **168** to provide mechanical advantage without introducing friction and backlash to the system. Sensors **28** and actuators **30** can be coupled to gimbal mechanism **140** at the link points between members of the apparatus, and can be combined in the same housing of a grounded transducer **174***a* or **174***b*. A rotational shaft of actuator and sensor can be coupled to a pulley of capstan drive mechanism **164** to transmit input and output along the associated degree of freedom. User object **34** is shown as a joystick having a grip portion **162** for the user to grasp. A user can move the joystick about axes A and B.

Other embodiments of interface apparatuses and transducers can also be used in interface device **14** to provide mechanical input/output for user object **34**. For example, interface apparatuses which provide one or more linear degrees of freedom to user object **34** can be used.

FIG. **4** is a block diagram illustrating the preferred functionality of the force feedback system. **10** of FIG. **1**. The force feedback system provides a host control loop of information and a local control loop of information in a distributed control system.

In the host control loop of information, force commands **180** are provided from the host computer to the microprocessor **26** and reported data **182** is provided from the microprocessor **26** to the host computer. In one direction of the host control loop, force commands **180** are output from the host computer to microprocessor **26** and instruct the microprocessor to output a force having specified characteristics. For example, in U.S. Pat. No. 5,734,373, a command protocol is disclosed in which a host command includes a command identifier, specifying the type of force, and one or more command parameters, specifying the characteristics of that type of force. The microprocessor decodes or parses the commands according to local software or firmware. The host computer can also provide other types of host commands to the microprocessor **26** to characterize reading data with sensors and reporting data.

In the other direction of the host control loop, the local microprocessor **26** receives the host commands **180** and reports data **182** to the host computer. This data **182** preferably includes locative data (or sensor data) that describes the position of the user object **34** in one or more provided degrees of freedom. In some embodiments, other locative data can also be reported to the host computer, including velocity and/or acceleration data of the user object **34** and data describing the states of buttons **39** and/or the states/positions of other input devices **39** and safety switch **41**. The host computer uses the data **182** to update programs executed by the host computer, such as a graphical simulation or environment, video game, graphical user interface, etc.

In the local control loop of information, actuator signals **184** are provided from the microprocessor **26** to actuators **30** and sensor signals **186** are provided from the sensors **28** and other input devices **39** to the microprocessor **26**. The actuator signals **184** are provided from the microprocessor **26** to the actuators **30** to command the actuators to output a force or force sensation. The microprocessor can follow local program instructions (a "force routine") as described in greater detail in U.S. Pat. No. 5,734,373; incorporated by reference herein. Herein, the term "force sensation" refers to either a single force or a sequence of forces output by the actuators **30** which provide a sensation to the user. For example, vibrations, textures, attractive forces, a single jolt, or a force "groove" are all considered force sensations, as are the dynamic sensations disclosed herein.

In the other direction of the local control loop, the sensors **28** (and other input devices/safety switch) provide sensor signals **186** to the microprocessor **26** indicating a position (or other information) of the user object in degrees of freedom. The microprocessor may use the sensor signals in the local determination of forces to be output on the user object, as well as reporting locative data in data **182** derived from the sensor signals to the host computer that represents the position (or other characteristics) of the user object **34**, as explained above. The data **182** reported to the host computer by the microprocessor **26** typically includes a direct representation of the position (or motion) of the user manipulatable object **34**. The host computer updates an application program according to the newly-received position.

In a different, host-controlled embodiment that utilizes microprocessor **26**, host computer **12** can provide low-level force commands over bus **24**, which microprocessor **26** directly transmits to the actuators. In yet another alternate embodiment, no local microprocessor **26** is included in interface system **10**, and host computer **12** directly controls and processes all signals to and from the interface device **14**, e.g. the host computer directly controls the forces output by actuators **30** and directly receives sensor signals **186** from sensors **28** and input devices **39**.

Force Feedback Sensations

Because force feedback devices can produce such a wide variety of feel sensations, each with its own unique parameters, constraints, and implementation issues, the overall spectrum of force sensations has been divided herein into subsets. Herein, three classes of feel sensations are discussed: spatial conditions ("conditions"), temporal effects ("effects" or "waves"), and dynamic sensations ("dynamics"). Conditions are force sensations that are a function of user motion, effects are force sensations that are a predefined profile played back over time, and dynamics are force sensations that are based on an interactive dynamic model of motion and time. These three types of force sensations are described in greater detail in parent application Ser. No. 08/846,011.

Conditions describe the basic physical properties of an interface device based on spatial motion of the interface. For example, a joystick device has basic properties such as the stiffness, damping, inertia, and friction in the joystick handle. These elementary conditions define the underlying feel of handle motion during general manipulation. Conditions can also be barriers or obstructions ("walls") that restrict spatial manipulation of the stick, and can also be textures. Conditions are very compelling physical sensations because they generate forces as a function of the spatial

motion of the interface device as caused by the user. In most applications, conditions are used to tune the general feel of the device based upon provided parameters. For example, when flying an F-16 fighter in a game, a joystick handle might be made to feel very stiff and heavy. When flying an old Spitfire, a joystick handle might be made to feel loose and light. When the craft is damaged by an enemy fire, the joystick handle might be made to feel sticky with a scratchy texture.

Conditions are typically not associated with discrete sudden events during game play or application use, but are rather background conditions or background physical properties of application events, hence the name "conditions." A condition is usually an environmental feel that is set up and experienced over an extended period. Conditions may create force sensations that are a function of user object position, user velocity, and/or user object acceleration. Preferred standard types of conditions are springs, dampers, inertia, friction, texture, and walls. A spring force is a restoring force that feels like stretching or compressing a spring. A damper force is a drag resistance that feels like moving through a viscous liquid. An inertia force sensation feels as if the user is moving a heavy mass. A friction force sensation is a contact or rubbing resistance that encumbers free motion. A texture is a spatially varying resistance that feels like dragging a stick over a grating. A wall is an obstruction having a specified location that feels like a hard stop or a soft cushion.

Commanding conditions of the above types involves specifying the condition type and defining the unique physical properties associated with that type. Parameters can customize the feel of the force sensation by adjusting the location of the spring origin by assigning which axis or axes the spring is applied to, by limiting the maximum force output of the spring sensation, etc. Another parameter is a trigger parameter, which defines when to create the condition sensation. In the simplest case, the condition might be created (triggered) directly upon the call of the host command. In the more advanced case, the condition sensation being defined might be generated (triggered) upon a local event such as the press of a button. By defining these parameters, a wide variety of feels can be created. By combining multiple springs, even more diverse sensations can be defined. By combining one type of condition with other conditions such as textures and friction, the diversity grows further.

Effects are force sensations that are closely correlated with discrete temporal events during game play. For example, a shuttlecraft is blasted by an alien laser, the user feels a physical blast that is synchronized with graphics and sound that also represent the event. The jolt will likely have a predefined duration and possible have other parameters that describe the physical feel of the event. While discrete, effects can have a substantial duration—for example, if a small motor boat is caught in the wake of a huge tanker, the bobbing sensation may be an effect that lasts over an extended period and may vary over time. Effects are best thought of as predefined functions of time such as vibrations and jolts that can be "overlaid" on top of the background conditions described above as foreground sensations. In other words, effects are forces that are defined and "played back" over time when called.

Effects fall into two classes as described herein: a) Force Signals and b) Force Profiles. A Force Signal is an effect that is defined based on a mathematical relationship between force and time. This mathematical relationship is defined using waveform conventions. For example, a Force Signal might be defined as a force that varies with time based on a sine-wave of a given frequency and magnitude to create a vibration sensation. A Force Profile is an Effect that is defined based on a stream of digitized data. This is simply a list of force samples that are stored and played back over time. Using Force Signals, a complex sensation can be defined based on simple parameters such as Sine-Wave, 50 Hz, 50% magnitude. An advantage of Force Profiles is that they allow for more general shapes of forces, but require a significant amount of data to be transferred to and stored at the interface device **14**. A convenient way of defining force effects is by common wave parameters such as source, magnitude, period, duration, offset, and phase. Once a waveform is defined, its shape can be adjusted using an envelope whose shape is defined by further parameters such as Impulse Level and Settle Time, Fade Level and Fade Time. Further parameters can specify direction in vector space, degrees of freedom, and triggers (buttons). Furthermore, a single complex effect can be specified as a sequential combination of multiple simpler effects.

Three basic types of effects are periodic, constant force (vector force), and ramp. The periodic type of effect is the basic effect described above, in which a signal source such as a sine wave, triangle wave, square wave, etc., has a frequency and amplitude and may be shaped for a specific application. A vibration is the most common type of periodic force. A constant force is simply a constant magnitude output over time, but also may be shaped using the envelope parameters discussed above to achieve a waveform that is shaped like the envelope. A ramp is simply a rising force magnitude followed by a falling force magnitude, and can be defined as a single half cycle of a triangle wave or other waveform. Other types, such as periodic sweep, vector force, pop, and smart pop, can also be defined, as disclosed in parent application Ser. No. 08/846,011.

Dynamic force sensations provide interactive force sensations based on real-time dynamic simulations of physical systems. Dynamic sensations involve real-time physical interactions based on 1) user motion as well as 2) a physical system wherein user motion during the interaction affects the behavior of the physical system. For example, if the user wades through swamp-muck in a violent manner that stirs up undulations in the fluid, the user's rash motions will increase the difficulty of travel because the undulations in the fluid will worsen as the user struggles. But, if the user wades through the swamp-muck in a dexterous manner that absorbs the undulations in the fluid, the user will have an easier time passing through the muck. This example, like all interactions with physical systems, demonstrates that how the user influences the system during the event will effect how the event feels.

High level dynamic sensation commands allow the host computer to coordinate the feel and execution of the dynamic sensations with gaming or other application program interactions. Each dynamic sensation sets up a physical sensation within the local processing routine of the interface device. Parameters defined by the programmer can tune the dynamic sensation for specific application events. Basic types of dynamic sensations include Dynamic Control Law, Dynamic Recoil, Dynamic Impact, Dynamic Liquid. Dynamic Inertia, Dynamic Center Drift, Dynamic Sling and Dynamic Paddle. Preferably, each of these sensations is based on a basic physical system defined in Dynamic Control Law including a dynamic mass that is connected to the user object **34** by a simulated spring and a simulated damper. When the user object **34** moves, the simulated mass moves because the spring and the damper link the two

systems "physically." Depending upon how the mass, the spring, and the damper parameters are defined, the mass might jiggle, jerk, or sluggishly lag behind the user object. Also, there are initial conditions that can be defined to help tune the feel sensation, and an ambient damping parameter that defines the simulated medium that the mass is moving in. The user feels the effects of the physical system and may influence the physical system dynamically. These parameters can be varied to provide the variety of dynamic sensations.

FIG. **5** illustrates a display device **20** displaying an interactive graphical toolset interface **300** of the present invention that enables developers and programmers of force feedback ("users" of the interface) to design and implement force sensations rapidly and efficiently. The graphical environment allows conditions, effects ("waves"), and dynamics to be defined through intuitive graphical metaphors that convey the physical meaning of each parameter involved. As the parameters are manipulated, sensations can be felt in real-time, allowing for an iterative design process that fine-tunes the feel to the designer's exact need. Once the appropriate sensation is achieved, the interface can save the parameters as a resource and automatically generate optimized code in a desired format that can be used directly within an application program. Thus, interface **300** handles most of the force feedback development process from force sensation design to coding. With these tools, force feedback programming becomes a fast and simple process.

The challenge of programming for force feedback is not the act of coding. Force models to provide force sensations are available, and, once the desired force sensation is known and characterized, it is straightforward to implement the force sensation using software instructions. However, the act of designing force sensations to provide a desired feel that appropriately match gaming or other application events is not so straightforward. Designing force sensations and a particular feel requires a creative and interactive process where parameters are defined, their effect experienced, and the parameters are modified until the sensations are at the desired characterization. For example, when designing conditions, this interactive process might involve setting the stiffness of springs, sizing the deadband, manipulating the offset, and tuning the saturation values. When designing effects, this might involve selecting a wave source (sine, square, triangle, etc.), setting the magnitude, frequency, and duration of the signal, and then tuning the envelope parameters. For a dynamic sensation, this might involve setting the dynamic mass, and then tuning resonance and decay parameters. With so many parameters to choose from, each applicable to a different type of force sensation, there needs to be a fast, simple, and interactive means for sensation design. To solve this need, the graphical interface **300** of the present invention allows a user to rapidly set physical parameters and feel sensations, after which the interface automatically generates the appropriate code for use in a host computer application program.

Interface **300** enables interactive real-time sensation design of conditions, effects, and dynamics, where parameters can be defined and experienced through a rapid iterative process. Thus, it is preferred that a force feedback interface device **14** be connected to the computer implementing interface **300** and be operative to output commanded force sensations. Intuitive graphical metaphors that enhance a programmer's understanding of the physical parameters related to each sensation type are provided in interface **300**, thereby speeding the iterative design process. File-management tools are also preferably provided in interface **300** so that designed force sensations can be saved, copied, modified, and combined, thereby allowing a user to establish a library of force sensations. Once sensations are defined, the interface **300** preferably stores the parameters as "resources" which can be used by an application program. For example, by linking a force sensation resource into an application program, the resources can be converted into optimized Direct-X code for use in an application in the Windows environment. Other code formats or languages can be provided in other embodiments. Interface **300** can be implemented by program instructions or code stored on a computer readable medium, where the computer readable medium can be either a portable or immobile item and may be semiconductor or other memory of the executing computer (such as computer **12**), magnetic hard disk or tape, portable disk, optical media such as CD-ROM, PCMCIA card, or other medium.

As shown in FIG. **5**, the interface **300** has three primary work areas: the sensation pallet **302**, the button trigger pallet **304**, and the design space **306**. Force sensations are created in the design space **306** and can be saved and loaded into that space using standard file handling features.

To create a new force sensation, a sensation type is chosen from the sensation pallet **302**. Pallet **302** is shown in an expandable tree format. The root of the tree includes the three classes **310** of force feedback sensations described herein, conditions, waves (effects), and dynamics. Preferably, users can also define their own headings; for example, a "Favorites" group can be added, where force sensations with desirable previously-designed parameters are stored.

In interface **300**, the conditions, waves, and dynamics classes are shown in expanded view. These classes may also be "compressed" so as to only display the class heading, if desired. When a class is displayed in expanded view, the interface **300** displays a listing of all the sensation types that are supported by the hardware connected to the host computer **12** for that class. For example, when programming for more recent or expensive hardware supporting a large number of force sensation types, a list including many or all available sensation types is displayed. When programming for older or less expensive interface device hardware that may not implement all the sensations, some sensation types can be omitted or unavailable to be selected in the expanded view. Preferably, interface **300** can determine exactly what force sensations are supported by a given interface device **14** connected to the host computer by using an effect enumeration process, i.e., the host computer can request information from the interface device, such as a version number, date of manufacture; list of implemented features, etc.

Once a sensation type is chosen from the sensation pallet **302**, the sensation type is added to the design space **306**. For example, in FIG. **5**, an icon **308** for the selected force sensation "Damper" is displayed within the design space **306** window. Icon **308** can now be selected/opened by the user in order to set the parameters for the given sensation type using graphical development tools (described below). Multiple icons can similarly be dragged to the design space to create a more complex force sensation. Once the parameters are specified for the given sensation, the sensation can be saved as a resource file. Using this process, a user can create a diverse library of feel sensations as resource files. Also, predefined libraries of sample resources from third party sources might also be available.

Options displayed in the trigger button pallet **304** can also be selected by the user. Trigger pallet **304** is used for testing force sensations that are going to be defined as button reflexes. For example, a force sensation might be designed

as a combination of a square wave and a sine wave that triggers when Button #**2** of the interface device is pressed. The square wave would be created by choosing the periodic type **312** from the sensation pallet **302** and defining parameters appropriate for the square wave. A sine wave would then be created by choosing another periodic type **312** from the sensation pallet **302** and defining the parameters appropriate for the sine wave. At this point, two periodic icons **308** would be displayed in the design space window **306**. To test the trigger, the user can just drag and drop these icons **308** into the Button **2** icon **314**. Button **2** on the interface device **14** has thus been designed to trigger the reflex sensation when pressed. This process is fast, simple, and versatile. When the user achieves a sensation exactly as desired, the sensation can be saved as a resource file and optimized software code for use in the application program is generated. The Button **2** selection might be provided in other ways in different embodiments. For example, the user might select or highlight the designed force icons in design space **306** and then select the Button **2** icon in pallet **304** to indicate that the highlighted forces will be triggered by Button **2**.

FIG. **6** illustrates interface **300** where a force sensation is characterized in the design space **306**. When an icon **308** in design space **306** is selected by the user, the icon **308** expands into a force sensation window and graphical environment for setting and testing the physical parameters associated with the selected sensation. For example, in FIG. **6**, a spring sensation type **320** has been selected from the condition list **322** and provided as icon **324** in the design space **306**. A spring window **326** is displayed in design space **306** when icon **324** is selected. Within spring window **326** are fields **328** characterizing the force, including the axis **330** (and/or direction, degree of freedom, etc.) in which the force is to be applied, the gain **332** (or magnitude) of the force, and the parameters **334** associated with the force sensation. For example, for the spring sensation, the positive stiffness ("coefficient"), negative stiffness ("coefficient"), positive saturation, negative saturation, offset, and deadband of the spring sensation are displayed as parameters. The user can input desired data into the fields **328** to characterize the force. For example, the user has specified that the force is to be applied along the x-axis (in both directions, since no single direction is specified, has specified a gain of 100, and has specified saturation values of 10,000 in positive and negative directions. The user can also preferably specify all or some of the parameters in graphical fashion by adjusting the size or shape of the envelope, the height or frequency of the waveform, the width of the deadband or springs, the location of a wall on an axis, etc. by using a cursor or other controlled graphical object.

As the user inputs values into fields **328**, the resulting additions and changes to the force sensation are displayed in an intuitive graphical format in the force sensation window. For example, in the spring sensation window **326**, graphical representation **336** is displayed. Representation **336** includes an image **338** of the user object **34** (shown as a joystick, but which also can be shown as other types of user objects), an image **340** of ground, an image **342** of a spring on the right of the joystick **34**, and an image **344** of a spring on the left of the joystick **34**. Representation **336** models a single axis or degree of freedom of the interface device.

Representation **336** represents a physical, graphical model with which the user can visually understand the functioning of the force sensation. The user object image **338** is displayed preferably having a shape similar to the actual user object of the desired interface device (a joystick in this example). Along the displayed axis, in both directions, there are spring images **342** and **344** as defined by a positive stiffness parameter (k) and a negative stiffness parameter (k). Graphically, the large stiffness of the spring to the right (coefficient of 80) is represented as a larger spring image **342**. The origin of the spring condition is shown at a center position **346**, since the offset parameter **348** is zero. If the offset has a positive or negative magnitude, the origin would be displayed accordingly toward the left or right. The deadband region is shown graphically as the gap between the user object image **338** and the spring images **342** and **344**.

In the preferred embodiment, the graphical representation further helps the user visualize the designed force sensation by being updated in real time in accordance with the movement of the user object **34** of the connected interface device **14**. User object image **338** will move in a direction corresponding to the movement of user object **34** as caused by the user. The user object is free to be moved in either the positive or negative direction along the given axis and encounter either a positive or negative stiffness from the spring sensation. Thus, if the user object is freely moved to the left from origin **346**, the joystick image **338** is moved left in the deadband region, and when the user object **34** encounters the spring resistance, the joystick image **338** is displayed contacting the spring image **344**. If there is no deadband defined, the spring images **342** and **344** are displayed as contacting the joystick image **338** at the center position. The edge stop images **350** define the limits to the degree of freedom; for example, when the user object **34** is moved to a physical limit of the interface device along an axis, the joystick image **338** is displayed as contacting an appropriate edge stop image **350**.

FIGS. **7***a*–**7***c* illustrate graphical representation **336** as the user object **34** is moved by the user. In FIG. **7***a*, the user moves the user object **34** and image **338** in a positive direction along an axis as shown by arrow **354**. No force resistance is felt by the user, since the user object is in the deadband region. This is represented by displaying joystick image **338** having no contact with other objects. In FIG. **7***b*, the user object **34** encounters spring stiffness in the positive direction and begins to compress the spring. As shown by the graphical representation **336**, the joystick image **338** has contacted right spring image **342** and the spring image **342** is shown slightly compressed. In FIG. **7***c*, the user object continues to move against the spring force, as accordingly displayed as spring **342** compression in representation **336**. Once the positive spring stiffness is encountered, the resistance force increases linearly with compression of the spring (as is true of a real spring). The amount of compression felt by the user is correlated with the amount of compression shown by spring image **342**. If the programmer has defined a saturation value for force opposing movement in the positive direction, the force output would cease increasing with compression once the saturation limit in the positive direction was exceeded. The saturation can also be shown graphically, for example by displaying the applicable spring image in a different color (such as red), or by displaying a message or indicator on the screen.

Referring to FIG. **6**, once the user has tested the input parameters and settings, he or she may change any of the existing information or add new information by inputting data into fields **328**. Any such changes will instantly be displayed in window **326**. For example, if the user changes the coefficient (stiffness) of the spring on the right, the spring image **342** will immediately be changed in size to correlate with the new value. The user thus gains an intuitive sense of how the sensation will feel by simply viewing the represen-

tation **336**. The user can then determine how the sensation will feel with more accuracy (fine tuning) by moving the user object and feeling the sensation. Thus, the graphical representation **336** as displayed clearly demonstrates to the user the various effects of parameters on the force sensation and additionally allows the user to experience the forces coordinated with the graphical representation.

FIG. **8** illustrates another graphical representation **360** that can be displayed in interface **300** for a spatial texture condition. Joystick image **362** is moved in coordination with movement of the user object **34**, as described above. A spatial texture is graphically designated in the displayed axis by left grating **364** and right grating **366**, which represent "bumps" in the texture. Left grating **364** has a different size of "bump" and a different spacing between bumps than right grating **366**. The appropriate texture is felt by the user on user object **34** and visualized on representation **360** as the user object is moved through the textured region. The user preferably can specify the space between bumps, the size of the bumps, the magnitude of the bumps (shown by the height of the grating in representation **360**), and the overall size of a textured region in an axis. Each axis can preferably be separately characterized with textures. An alternative graphical representation of a texture condition is described with reference to FIG. **24**.

FIG. **9***a* illustrates a graphical representation **370** that can be displayed in interface **300** for a wall condition. Hard-stop images **372** and/or **374** can be provided in the path of travel of the joystick image **376**. As shown in FIG. **9***b*, when the user object is moved to encounter the wall force, the joystick image **376** is correspondingly moved as shown by arrow **378** against the stop image **372**. The user can specify the location of the wall, the hardness of the wall, and other parameters as discussed above for a wall condition. For example, if the user specifies the wall as having a hard like metal material, the image of the joystick **376** will not tend to bend or compress the stop image **372**. However, if the wall is specified as a flexible, rubber-like material, the joystick **376** can be displayed moving into the stop image **372** or the stop image can be displayed as "compressing" or shrinking as the wall "flexes" in response to the user object moving into it.

Other condition force sensations may also be similarly graphically represented in design space **306**. For example, a damping condition can be displayed similarly to the spring condition, where a schematic representation of a damper is displayed in each direction on an axis. Another alternative damper representation is shown with respect. to FIG. **12**. An inertia condition can be represented using a graphical image of a mass on top of or connected to the joystick image **338**, where the size of the image indicates the size of the mass. A friction condition can be represented by a texture having bumps or the like, or by a region having a specific color or shade.

In other embodiments, a 2 dimensional force sensation (i.e. two degrees of freedom) can be displayed in the window **326** by showing an overhead representation of the user object. For example, a circular user object image can be displayed in the middle of two sets of spring images in a cross formation, each set of springs for a different degree of freedom.

FIG. **10** illustrates interface **300** with a graphical representation for a periodic wave (effect) sensation. Periodic window **380** is displayed in response to the user selecting (e.g., double clicking on) periodic icon **382** that has been dragged into design space **306**. The periodic window **380** includes a waveform source field **384**, magnitude scale **386**, envelope parameters **388**, direction dial **390**, trigger parameters **392**, and a graphical representation **392**. Waveform source field **384** allows a user to select from multiple available types of signal wave sources for the effect. In the case of FIG. **10**, the user has selected a square wave source. Graphical representation **394** is displayed having a shape based on the wave source chosen. Thus, a square wave is graphically displayed in the example of FIG. **10**. The direction of the waveform may also be selected using dial **396** (which is partially obscured by the wave source drop-down menu) and field **397**. A period **399** may also be input to specify the frequency of the waveform.

The magnitude scale **386** can be adjusted by the user to select a magnitude of the wave shown by graphical representation **394**. In the preferred embodiment, the scale is a slider control knob **398** that can be moved by the user along the scale **400**, where the scale **400** is preferably arranged in a vertical orientation corresponding to the magnitude scale of graphical representation **394** to permit greater ease of visualization on the part of the user. In other embodiments, other magnitude selection fields or objects may be provided.

Envelope parameters **388** allow, the user to shape the waveform into a desired effect. For example, parameters **388** preferably include a duration field **402**, a gain field **404** (where "gain" can be used as a global scaling factor or multiplier for force magnitudes output by the interface device **14**), and attack and fade parameters **406** to permit the specifying of impulse magnitude and fade rate. Direction dial **390** is a graphical object allowing a user to specify the direction of the effect in two dimensions. The user may drag or otherwise specify the angle of the pointer, which is also shown in direction field **408** (dial **396** is preferably similar). Trigger parameters **392** allow a user to assign trigger button(s) to the designed effect. The repeat interval field **410** allows a user to specify the amount of time before the effect is repeated if the designated button is held down. These parameters and characteristics can be entered as numbers in the displayed input fields or prompts, or can be input by dragging the graphical representation **394** of the waveform with a cursor to the desired shape or level.

The parameters, when specified, cause the graphical representation **394** to change according to the parameters. Thus, if the user specifies a particular envelope, that envelope is immediately displayed in the window **380**. The user can thus quickly visually determine how specified parameters exactly affect the periodic waveform. The user can also activate the waveform sensation and grasp the user object to experience the actual force sensation. Preferably, the graphical representation **380** is animated or a pointer is moved in coordination with the output of the force sensation on the user object. For example, if an impulse and fade is specified, the wave is animated so that the impulse portion of the waveform is displayed when the impulse force is output on the user object, and the fade is displayed when the output force fades down to a steady state level. Alternatively, the entire waveform can be displayed, and a pointer or other marker can designate which portion of the waveform is currently being output as a force on the user object. This feature enables the user to realize how different portions of the wave affect the feel sensation on the user object.

FIG. **11** illustrates interface **300** displaying a graphical representation of an advanced periodic sweep sensation. This type of waveform may include additional variables and features over the standard waveform effect described with reference to FIG. **10**. A periodic sweep sensation is similar to a standard periodic waveform or vibration, but is different in that the direction of the force sweeps between a start and end orientation or direction. A start dial **412** and an end dial

414 are used by the user to define the starting and ending directions for the periodic sweep. In example of FIG. 11, the user has chosen a sine wave as the signal source in field 384. The user also has assigned values to the magnitude, period, and of the signal, similar to the waveform of FIG. 10. The user has also activated the envelope feature and has created an impulse wave shape using attack and fade parameters 406. In addition, the user can assign a phase using a phase pointer 416 and phase field 418, which indicate the phase angle of the waveform. These parameters and characteristics can be entered as numbers in an input field or prompt, or can be input by dragging the graphical outline of the waveform with a cursor to the desired shape or level. When the user wishes to test the force sensation, the user can feel the direction of the force sweep through the directions as specified in the dials 412 and 414 and can thus easily determine the correlation of the dials and the desired feel sensation.

Other waves that can be designed and tested in the interface 300 include a "smart pop" and a vector force. For example, a Vector force can be designed using a window similar to window 380, where the direction of the force is selected with dial 390. An envelope could also be specified for the vector force, if desired, using window 390 and displayed therein.

Dynamic force sensations, when selected in design space 306, are similarly displayed in a sensation window and provide parameter fields into which the user may enter parameter data. A visual representation can be displayed as the simulated physical system described above. For example, the Dynamic Control Law sensation has parameters that directly affect the components of the displayed physical system and can be readily viewed and tested by the user, For the other dynamic sensations, the user can be shown the mapping of the parameters of the selected dynamic sensation to the dynamic control law parameters so the user can view how the parameters effect the simulated physical system. In other embodiments, a more appropriate representation might be displayed instead of or in addition to the physical system described above. For example, for the sling and paddle sensations, a representation of the ball and sling can be displayed. For Dynamic Liquid, the user object can be displayed in the middle of animated liquid which undulates in conjunction with the movement of a simulated mass. For Dynamic Recoil, a picture of a gun or weapon can move in conjunction with the blast and reverberation of the sensation. Other animations and representations can be provided as desired.

Once a force sensation has been designed using the graphical tools as described above, the definition can be saved as a resource of parameters. By accessing the interface resource from an application program, the resource is converted automatically from a parameter set to code in the desired language or format, e.g., Direct-X by Microsoft® Corporation for use in the Windows™ operating system. For example, the force feedback resource can be provided as or in a DLL (Dynamic Linked Library) that is linked to an application program. In one embodiment, the DLL can provide the application program with effects defined as completed Direct_X Structs (DI_Struct), where the application programmer can then create effects by using the CreateEffect call within Direct-X (or equivalent calls in other languages/formats). Or, the DLL can perform the entire process and create the effect for the application program, providing the programmer with a pointer to the sensation. One advantage of using the first option of having the programmer call CreateEffect is that it gives the programmer the opportunity to access the parameters before creating the effect so that the parameters can be modified, if desired.

FIG. 12 illustrates interface 300 displaying a graphical representation of a damping condition (damper) in design space 306. The user has dragged a damper icon 324 into the design space 306. A damper window 450 is displayed in design space 306 when damper icon 324 is selected. Within damper window 450 are two main windows, one for each axis (assuming two axis interface device). The second axis has not been specified in the example of FIG. 12. Within the first axis window are fields 452 characterizing the damping force, similar to fields 328 in spring window 326 of FIG. 6. The axis or axes in which the force is applied is selected in field 454. If both axes are selected, then a window for each axis is displayed and includes a graphical representation of the force sensation. The user can select a global force gain using slider 456. A defaults button 461 can be selected by the user to return all parameter values to default levels (preferably, the user can save preferred default levels if desired). The user can also select both-axes box 458, which causes the parameters of one axis to be automatically mimicked for the other axis, i.e., the parameters of one axis are copied to the parameters of the other axis. When the parameters of one axis are modified, the parameters of the other axis are automatically changed to be the same. The user can select symmetric box 460 to make each direction on an axis mirror each other, i.e., the parameters in one direction are automatically copied to the other direction on that axis. If both boxes 458 and 460 are selected, the user need only edit force sensation parameters for one direction of one axis, and the force in all the other directions of all the axes will be characterized the same as the edited direction. Thus, boxes 458 and 460 allow easy specification of symmetric forces.

The main damper window 462 offers two modes: simple and advanced. The simple mode is shown in FIG. 12. In this mode, a column of represented liquid 464 is shown for the negative direction on the first axis, and a column of represented liquid 466 is shown for the positive direction on the first axis. The height of each liquid column indicates the magnitude of damping in that direction, where the height is equivalent to a damping constant b in the equation $F=bV$, where v is the velocity of the damped object and F is the resulting force.

When testing the feel of the damping force, the user moves the user object, such as a joystick, and feels the force sensation in real time. In interface 300, the middle line 468 represents the position of the user object. When the user moves the user object in the negative direction represented in window 462, the line 468 moves to the left. To the user, it looks as if the line is moving against a large column of water or liquid, and the feel of the user object feels the same way. As the line moves left, the column of liquid 464 gets thinner and the column of liquid 466 gets wider. In addition, liquid preferably is animated on display screen 20 to shoot out of left pipe 470 as the user moves the line left. This conveys the damping concept to the user in a graphical, intuitive way. A similar result occurs if the user moves the line 468 to the right, into column 466, except a smaller damping force is felt.

As described above, the normal procedure for a force designer in using interface 300 is to input parameters for a selected type of force sensation, test the way the force feels by manipulating the user object, adjusting the parameters based on the how the force feels, and iteratively repeating the steps of testing the way the force feels and adjusting the parameters until the desired force sensation is characterized. Normally, the user would then save the resulting parameter

set describing this force sensation to a storage medium, such as a hard disk, CDROM, non-volatile memory, PCMCIA card, tape, or other storage space that is accessible to a computer desired to control the force feedback. The user also preferably assigns an identifier to the stored parameter set, such as a filename, so that this force sensation can be later accessed. Thus, other application programs running on a host computer can access the parameter set by this identifier and use the designed force sensation in an application, such as in a game, in a graphical user interface, in a simulation, etc.

The icons **451** and **453** are designed to help the user with the design of force sensations from previously stored force sensations. Clip objects icon **451**, when selected, provides the user with a list or library of predefined, common force sensations that the user can use as a base or starting point, i.e., the user can modify a common spring condition configuration to quickly achieve a desired force. This library can be provided, for example, from commercial force providers or other sources. Favorites icon **453**, when selected, causes a list of force sensations that the user himself or herself has previously stored on the storage medium and which can also be used as a starting point in designing force sensations.

FIG. **13** illustrates interface **300** displaying the damping condition as in FIG. **12**. However, in FIG. **13**, the user has adjusted the columns of water to change the damping force, where column **464** has been decreased slightly, and column **466** has been increased by a large amount. In the preferred embodiment, the user can select a column using a cursor and drag the level of the liquid column up or down to adjust the damping force. This, in effect, adjusts the damping coefficient b in that direction. The user can also adjust coefficients by directly inputting values into fields **452**.

FIG. **14** illustrates interface **300** displaying the damping condition of FIG. **12**. However, in FIG. **14**, the user has selected the advanced mode for graphically representing a damping condition. The user has selected button **472** to select advanced mode. In this mode, the columns of liquid **464** and **466** of simple mode are no longer displayed. Instead, a force vs. velocity profile **474** for a damping condition is displayed in window **462**. The profile **474** represents all aspects of the damping condition, much of which was not represented in simple mode. For example, the saturation values are shown as control points **478**, deadband is shown by control points **480**, and coefficients are shown by the slope of lines **482**. This representation is less intuitive than the simple model and would typically be used for designers have some experience in designing damping sensations. As with all the sensations, the user can move the user object in directions on the appropriate axis, and line **484** moves as a result based on the velocity of the user object, where the user feels the damping sensation provided by the displayed profile at the point where line **484** intersects a line **482**. The displayed parameters are preferably sent to the local microprocessor of the interface device. The local microprocessor then outputs the specified force while the host computer displays the graphical changes in interface **300**. In alternate embodiments, the host can directly output control signals to actuators to control any force sensations as well.

An inertia icon shown in palette **302** (of FIG. **16**, for example) can be selected to similarly design an inertia condition in a window in design space **306**. The inertia force can be graphically represented by a force versus acceleration profile, similar to the force versus velocity profile displayed for the advanced damping condition.

FIG. **15** illustrates the advanced damping model of FIG. **14** after the user has adjusted some of the parameters of the damping force sensation. In the preferred embodiment, the user may select the control points **478** and **480** and drag them to any desired position. This adjusts the saturation, offset and deadband values directly, and also adjusts the coefficients by adjusting the slope of lines **482**.

Also in FIG. **15**, the user has adjusted the negative direction coefficient to be negative, i.e. a negative slope. This type of control is meant for advanced users, since a negative damping force is unstable: it means that the faster the user moves the user object in that direction, the stronger will be the damping force urging the user object in that direction, rather than resisting the user object.

FIG. **16** illustrates interface **300** displaying an alternative graphical representation of a spring condition. FIG. **16** also shows the variety of conditions **491** available to be selected from the condition list. The representation used in FIG. **6** can be used for a spring condition as well. In FIG. **16**, the user, has selected spring icon **490** in the design space **306**. A spring condition window **492** is displayed in the design space **306** when icon **490** is selected. As in the damping condition window **450** of FIG. **12**, the spring window **492** includes parameters **452** for characterizing the spring force, as well as gain **456** and axis control **454**. A window is displayed for each axis in which the force is to be applied. The greyed out window for the second axis condition indicates that no force is presently assigned to that axis.

In first axis window **494**, a simple mode and advanced mode is available, similar to the damping condition. In FIG. **16**, simple mode has been selected by the user. Spring images **496** are displayed from each edge of window **494**, where spring image **496***a* is for the negative direction and spring image **496***b* is for the positive direction. When the user moves the user object along the displayed axis (the x-axis), line **498** moves in the corresponding direction. When the line **498** moves into a spring image **496**, the microprocessor outputs the specified spring force on the user object so the user can feel the characterized force sensation. As the user object continues to be moved into the spring, the spring image compresses as a real spring would. The empty space between spring images **496** indicates the deadband region where no forces are output. It should be noted that the user will feel a spring force if any component of the user object's motion is along the x-axis; if the user moves the user object at a 45-degree angle (where the x-axis is at 0 degrees), then a component of the spring force in the x-axis will be felt. This component will be a weaker spring force than if the user object were moved directly on the x-axis. This is also preferably the case for all the conditions of the interface **300**. In some alternate embodiments, the spring force might be turned off in all directions except for movement precisely (or within a tolerance) of the displayed axis.

FIG. **17** illustrates spring condition window **492** of FIG. **16** after the user has adjusted the parameters of the spring force sensation. In the preferred embodiment, the user may adjust the stiffness (k) of the spring force by selecting control points **500** at the edges of the front of the spring images **496** with a cursor. The user can drag the control points to adjust the widths of the spring images, which in turn adjusts the stiffness parameter (where stiffness k is a constant in the equation F=kx, x being the displacement of the user object and F being the resulting force). A thicker spring image indicates a larger stiffness parameter, and a stronger spring force. Thus, image **496***a* is wide and indicates a large spring force in the negative direction, and the opposite in the positive direction.

The user may also move the front ends of the spring images closer together or further apart, thus adjusting the deadband and offset parameters. The current location of the user object is indicated by line **498**; the dashed line **502** indicates the center position on the displayed axis. As parameters are adjusted, they are sent to the local microprocessor which then implements the newly characterized force on the user object (if appropriate).

FIG. **18** illustrates the advanced mode for the spring condition of FIG. **16**. As in the damper condition of FIG. **14**, the advanced spring condition shows a force vs displacement profile in window **494** instead of the spring images **496**. All the parameters for the spring condition are graphically represented in window **494**, including saturation values as indicated by control points **504** (saturation values were not represented in the simple mode of FIG. **16**). The deadband and offset are defined by control points **506**, while the stiffness is indicated by lines **507**. This representation is less intuitive than the simple model and would typically be used for designers have some experience in designing spring sensations. As with all the sensations, the user can move the user object in directions on the appropriate axis, and line **508** moves based on the displacement of the user object, where the user feels the spring sensation provided by the displayed profile when the line **508** intersects the lines **507**. The steepness of the slope of lines **507** provides an intuitive representation of the amount of spring stiffness provided. The displayed parameters are preferably sent to the local microprocessor, which outputs the specified force on the user object while the host computer displays the graphical changes in interface **300**.

As with the advanced damping model, the control points **504** and **506** may be moved by the user by selecting the desired point and dragging it to a new position; This adjusts the saturation, offset and deadband values directly, and also adjusts the stiffness by adjusting the slope of lines **507**. A negative stiffness can also be specified, which is not possible in the simple mode of FIG. **16**; but a negative stiffness is better represented as a slope with a different image as described below with reference to FIG. **21**.

FIG. **19** illustrates interface **300** displaying active windows for both x- and y-axes of the interface device. Field **454** is adjusted by the user to display both axes. For the first axis (x-axis), displayed in window **494**, the user has selected the advanced mode as described in FIG. **18**. For the second axis (y-axis), displayed in window **510**, the user has selected the simple mode as described in FIG. **17**. When the user moves the user object, the line **508** moves simultaneously with line **509** as long as the user object movement has both x- and y components. If two simple modes are simultaneously displayed in windows **494** and **510**, spring images in both axes may be compressed simultaneously with the appropriate movement of the user object.

FIG. **20** illustrates interface **300** displaying the damping condition window **450** of FIG. **12** simultaneously with spring condition window **492** in design space **306**. This may indicate that the user is designing a compound force sensation consisting of two different force sensations. As shown, the user has designated the x-axis of the user object to have both a spring force, represented by spring images **496**, as well as a damping force, represented by images **464** and **466**. The user can test the resulting compound force sensation by moving the user object along the x-axis. The microprocessor is sent both sets of parameters and superimposes one force sensation on the other. Additional force sensations can similarly be dragged as icons into design space **306** and opened to windows by selecting the icons, thus creating a compound force sensation with many different individual sensations.

FIG. **21** illustrates interface **300** displaying a graphical representation of a slope condition. As shown, the user has selected slope icon **520** from the list of conditions displayed in sensation palette **302**. The icon **522** is displayed in design space **306**, and after the user selects icon **522**, slope condition window **524** is displayed in design space **306**. As in the other condition windows, slope condition window includes parameters **452**, **454**, and **456**. A graphical representation of the slope condition is displayed in window **526**. The user has selected simple mode in this example, and is only specifying a force in the first axis of the interface device (the advanced mode for the slope condition is preferably identical to the advanced mode of the spring condition, described above in FIGS. **18** and **19**).

A slope condition is represented as a ball **528** controlled by the user and rolling on a hill **530**. The ball **528** starts in the center of the hill, and as the user moves the user object to the right, the ball begins to roll down the hill to the right. A dashed line **529** is displayed through the middle of the ball and moves with the ball to indicate the position of the user object. As in the real-world equivalent, the ball moves faster the further away from the top it rolls. A corresponding force sensation is output on the user object during this visual representation, where the force sensation is provided as a negative spring stiffness. This is the same type of force as provided in the spring condition, except the stiffness k is a negative value. The further the user moves the user object from the flat top area of the hill, the stronger is the force pulling the user away from the top of the hill. This is an unstable type of force, since further one moves the user object in a direction, the greater the force in that direction. This type of force is well modelled by the ball on a hill representation, and allows the user to intuitively picture and design forces having a negative stiffness parameter.

The user may adjust the parameters of the slope condition by dragging control points provided on the hill image. Control points **532** control the size of the deadband and the offset, and is represented as the size and location of the flat top area of the hill. Control points **534** control the stiffness of the slope force, which is the curvature of the hill. The location where the hill changes from a curvy slope to a linear slope (at points **534**) is the saturation value, which can be adjusted by moving control points **534**.

FIG. **22** illustrates another example of a graphical representation of the slope condition. In this example, the offset is zero, so the top of the hill is centered at the center point of the axis. Both sides of the hill have close to the same curvature, reflecting that the stiffness values in positive and negative directions are close to each other in value.

FIG. **23** illustrates a third example of a graphical representation of the slope condition. In this example, the user has defined a negative stiffness in the positive direction and a positive stiffness in the negative direction. The negative stiffness is represented as a downward slope of a hill, as in the examples of FIGS. **21** and **22**. The positive stiffness is represented as an upward slope of a hill. This upward slope is essentially a different way of representing a spring condition as in FIG. **16**, which also is defined by a positive stiffness. The advantage to using the slope representation as in FIG. **23** over the spring representation of FIG. **16** is that an axis can be intuitively designed with a positive stiffness in one direction and a negative stiffness in the other direction, which is not as easily visualized using the spring graphical representation of FIG. **16**.

FIG. **24** illustrates interface **300** displaying an alternate graphical representation of a texture condition. Either the representation of FIG. **24** or the representation of FIG. **8** may be used. The advantage to the representation in FIG. **24** is that both axes of the interface device are displayed in a single window or area.

In FIG. **24**, the user has selected a texture condition icon **540** from sensation palette **302**. The texture icon **542** has been dragged into design space **306** and has been selected, resulting in texture condition window **544** being displayed in the design space **306**. Texture condition window includes a style parameter **546** which is similar to the axis field **454** of the damper and spring condition windows, allowing the user to select which axes the texture is to be provided. Gain parameter **548** is a global scaling factor for force magnitudes to, for example, adjust force output levels for different hardware. Spacing parameter **550** determines the spacing between the "bumps" of the texture. Since both x-axis and y-axis are selected in window **544**, the spacing parameter **550** applies to both axes. Different spacing can be applied to each axis by individually selecting an axis in field **546** specifying the spacing for that axis, selecting the other axis in field **546**, and specifying the spacing in that axis. Density parameter **552** determines the width or thickness of the bumps of the texture. When both axes are selected in field **546**, the width in both axes is the same. The density for individual axes can be specified similarly to the spacing parameter **550**. The roughness sliders allow the user to specify a roughness in positive and negative directions on the axes specified by the style parameter **546**. The roughness indicates the intensity of the texture; for cases where texture is simulated by intermittent damping, it is the coefficient for damping in the bump regions.

Window **554** displays a graphical representation of the texture defined by the parameters and allows a user to adjust the parameters graphically. The texture is displayed as a field of rectangles **555** or squares, where the space between the rectangles is the spacing parameter and the size of the rectangles shows the density. Center lines **557** divide the field into four spatial quadrants, representing the workspace of the user object. The intersection of center lines **557** indicates the current position of the user object. Thus, when the user moves the user object in the two axes, the intersection moves accordingly. When the intersection moves over a rectangle **555**, the microprocessor outputs a bump forces in accordance with the specified parameters. When the intersection is between rectangles **555**, no force is output. In an alternative embodiment, the position of the user object can be indicated by a dot, circle or other graphical object, which can move in accordance with the user object.

Axis check boxes **560** allow the user to select which quadrants (or directions) on the axes are provided with the specified texture. If a box **560** is checked, the corresponding quadrant on that axis is provided with the texture; if the box is unchecked, the associated quadrant is not provided with the texture. The graphical representation **554** is updated accordingly. For example, if the left box **560** is unchecked, the left half of the display in window **554** is greyed out or shown as a solid color, indicating a lack of texture. Note that, for example, if the user object is positioned in the right half of display **554** and the left half of the display has no texture, the texture force is still output when the user object is moved to the left as long as the user object is positioned in the quadrant to the right of the center line **557**.

If the user selects only a single axis in which to apply a texture using style parameter **546**, the window **554** preferably displays lines, instead of squares, oriented perpendicularly to the selected axis, where the lines have a thickness equal to the density parameter and are spaced apart a distance equal to the spacing parameter.

The user can preferably graphical adjust the specified texture by selecting the spacing control point **562** and/or the density control point **564** with a cursor and dragging the selected control point in certain directions. For example, spacing control point **562** can be dragged to the left to decrease the spacing on the x-axis and y-axis, and can be dragged to the right for the opposite effect on the x- and y-axes. The density control point can similarly affect the density of the texture, as in field **552**. Alternatively, four control points can be provided, where two of the control points control the spacing and density on one axis (or in one direction), and the other two of the control points control the spacing and density on the other axis (or direction).

FIG. **25** illustrates interface **300** displaying an angle spring condition. The user has selected the angle spring icon **580** from the sensation palette **302** and has selected the icon **582** in the design space **306** to cause angle spring window **584** to be displayed. An angle spring condition is similar to a spring condition as shown in FIG. **16**, except that a direction of the spring force can be specified. In window **584**, a direction dial **586** is provided to allow the user to specify a direction. The user may either select and drag the pointer **588** of the dial graphically to select an angle, or input an angle directly in field **590**. Preferably, an angle spring always is defined in terms of 2 axes (or more), since the angle is defined within two degrees of freedom.

Window **594** displays the graphical representation of the angle spring. The axis (degree of freedom) represented in window **594** is the axis along the specified angle. The user moves the user object and dashed line **592** moves within spring window **594**, similar to the embodiment of FIG. **16**. Only the component of motion of the user object in the specified direction is displayed as line **592** moving. The full spring force indicated graphically by springs **596** will only be output on the user object if the user moves the user object in the direction specified by dial **588** and field **590**. If the user moves the user object in other directions, only a component of the full force will be felt by the user, i.e., if the user moves along the x-axis (0 degrees) and a 30 degree spring force is specified, the user will feel a weaker spring force than if moving along the 30-degree direction.

Preferably, the other angle forces shown in palette **302**, such as angle barrier **592**, angle slope **594**, and angle wall **596**, have direction specification and output similar to the angle spring described above.

Other conditions are also listed in palette **302**. The wall is a condition that provides an obstruction force to the movement of the user object, as discussed above with respect to FIGS. **9***a* and **9***b*. The location of the wall in provided axes in represented graphically by a large shaded line or block on an axis into which the user object is obstructed from penetrating. A barrier is similar to a wall, except the user object can penetrate the barrier and pop through to the other side of the barrier, and thus includes a thickness parameter which can be displayed graphically as a thickness of a block. The "spring at current" and "slope at current" conditions provide forces that are initiated at a current position of the user object; thus, a spring at current force will have an origin centered at the current location of the user object. This is useful for designing condition forces centered at other positions of the user object other that its origin position.

FIG. **26** illustrates interface **300** displaying another embodiment of a graphical representation of a wave or effect

periodic force sensation. The user has selected a periodic effect icon **600** in palette **302**, and has selected the icon **602** in design space **306** to display the periodic window **604**. Periodic window **604** is similar to the periodic graphical representations of FIGS. **10** and **11**, described above. In window **604**, the user is allowed to select the duration of the periodic wave using sliders **606**, and may also select an infinite duration with box **608**. The gain and offset may be selected using sliders **610**, and other parameters are provided in fields **612**. A graphical representation of the periodic waveform is shown in window **614**. The parameters in fields **612** can be graphically adjusted by the user by dragging control points **616** of the waveform, as described with reference to FIG. **11**. A frequency of the waveform can be adjusted by dragging a displayed wave to widen or narrow the displayed oscillations of the wave. Trigger buttons for the periodic wave can be determined in fields **618**, and the direction of the periodic wave in the user object workspace is determined using dial **620** and field **622**.

To test the specified periodic wave, the user preferably selects start button **624**, which instructs the microprocessor to output the specified force sensation over time to the user object so the user can feel it. In the preferred embodiment, a graphical marker, such as a vertical line or pointer, scrolls across the display window **614** from left to right indicating the present portion or point on the waveform currently being output. Since graphical display is handed by the host computer and force wave generation is (in one embodiment) handled by a local microprocessor, the host display of the marker needs to be synchronized with the microprocessor force generation at the start of the force output. The user can stop the output of the periodic sensation by selecting the stop button **626**.

While this invention has been described in terms of several preferred embodiments, it is contemplated that alterations, permutations and equivalents thereof will become apparent to those skilled in the art upon a reading of the specification and study of the drawings. For example, many different parameters can be associated with dynamic sensations, conditions, and effects to allow ease of specifying a particular force sensation. These parameters can be presented in the graphical interface of the present invention. Many types of different visual metaphors can be displayed in the interface tool of the present invention to allow a programmer to easily visualize changes to a force sensation and to enhance the characterization of the force sensation. Furthermore, certain terminology has been used for the purposes of descriptive clarity, and not to limit the present invention. It is therefore intended that the following appended claims include all such alterations, permutations, and equivalents as fall within the true spirit and scope of the present invention.

What is claimed is:

1. A method, comprising:

outputting a signal associated with a first haptic force associated with a first force profile, the first force profile being associated with a graphical representation for display within a graphical user interface, the graphical representation being illustrative of a force versus time characteristic of the first force profile;

receiving a control signal associated with a movement by a user of a control point of the graphical representation, the movement of the control point operative to change the first force profile to a second force profile; and

outputting a signal associated with a second haptic force, the second haptic force being based on the second force profile and being different from the first haptic force.

2. The method of claim **1**, wherein at least one actuator is configured to output one of the first haptic force or the second haptic force as a function of displacement of a manipulandum.

3. The method of claim **1**, wherein the movement of the control point is operative to modify a stiffness associated with the first force profile to obtain the second force profile.

4. The method of claim **1**, wherein the control point is a first of a plurality of control points, and wherein the movement of at least the first control point and a second control point of the plurality of control points is operative to modify a slope associated with the first force profile.

5. The method of claim **1**, wherein the movement of the control point is operative to modify a damping parameter associated with the first force profile.

6. The method of claim **1**, wherein the control point is one of a plurality of control points, and wherein each control point of the plurality of control points is independently moveable.

7. The method of claim **1**, wherein the second force profile is symmetrical about a midpoint independent of the movement of the control point.

8. A processor-readable medium comprising code representing instructions to cause a processor to:

output a signal associated with a first haptic force associated with a first force profile, the first force profile being associated with a graphical representation for display within a graphical user interface, the graphical representation being illustrative of a force versus time characteristic of the first force profile;

receive a control signal associated with a movement by a user of a control point of the graphical representation, the movement of the control point operative to change the first force profile to a second force profile; and

output a signal associated with a second haptic force, the second haptic force being based on the second force profile and being different from the first haptic force.

9. An apparatus, comprising:

means for outputting a signal associated with a first haptic force associated with a first force profile, the first force profile being associated with a graphical representation for display within a graphical user interface, the graphical representation being illustrative of a force versus time characteristic of the first force profile;

means for receiving a control signal associated with a movement by a user of a control point of the graphical representation, the movement of the control point operative to change the first force profile to a second force profile; and

means for outputting a signal associated with a second haptic force, the second haptic force being based on the second force profile and being different from the first haptic force.

10. A method, comprising:

retrieving a first force profile associated with a first haptic force, the first force profile being associated with a graphical representation for display within a graphical user interface, the graphical representation being illustrative of a force versus time characteristic of the first force profile;

receiving a control signal associated with a movement by a user of a control point of the graphical representation, the movement of the control point operative to change the first force profile to a second force profile; and storing the second force profile associated with a sec-

ond haptic force, the second haptic force being based on the second force profile and being different from the first haptic force.

11. The method of claim **10**, wherein at least one actuator is configured to output one of either the first haptic force or the second haptic force as a function of displacement of a manipulandum.

12. The method of claim **10**, wherein the movement of the control point is operative to modify a stiffness associated with the first force profile to obtain the second force profile.

13. The method of claim **10**, wherein the control point is a first of a plurality of control points, and wherein the movement of at least the first control point and a second control point of the plurality of control points is operative to modify a slope associated with the first force profile.

14. The method of claim **10**, wherein the movement of the control point is operative to modify a damping parameter associated with the first force profile.

15. The method of claim **10**, wherein the control point is one of a plurality of control points, and wherein each control point of the plurality of control points is independently moveable.

16. The method of claim **10**, wherein the second force profile is symmetrical about a midpoint independent of the movement of the control point.

17. A processor-readable medium comprising code representing instructions to cause a processor to:

retrieve a first force profile associated with a first haptic force, the first force profile being associated with a graphical representation for display within a graphical user interface, the graphical representation being illustrative of a force versus time characteristic of the first force profile;

receive a control signal associated with a movement by a user of a control point of the graphical representation, the movement of the control point operative to change the first force profile to a second force profile; and

store the second force profile associated with a second haptic force, the second haptic force being based on the second force profile and being different from the first haptic force.

18. An apparatus, comprising:

means for retrieving a first force profile associated with a first haptic force, the first force profile being associated with a graphical representation for display within a graphical user interface, the graphical representation being illustrative of a force versus time characteristic of the first force profile;

means for receiving a control signal associated with a movement by a user of a control point of the graphical representation, the movement of the control point operative to change the first force profile to a second force profile; and

means for storing the second force profile associated with a second haptic force, the second haptic force being based on the second force profile and being different from the first haptic force.

19. A method, comprising:

outputting a signal associated with a first haptic force associated with a first force profile, the first force profile being associated with a graphical representation for display within a graphical user interface, the graphical representation being illustrative of a force versus any one of a position, velocity or acceleration characteristic of the first force profile;

receiving a control signal associated with a movement by a user of a control point of the graphical representation, the movement of the control point operative to change the first force profile to a second force profile; and

outputting a signal associated with a second haptic force, the second haptic force being based on the second force profile and being different from the first haptic force.

20. The method of claim **19**, wherein at least one actuator is configured to output one of either the first haptic force or the second haptic force as a function of displacement of a manipulandum.

21. The method of claim **19**, wherein the movement of the control point is operative to modify a stiffness associated with the first force profile to obtain the second force profile.

22. The method of claim **19**, wherein the control point is a first of a plurality of control points, and wherein the movement of at least the first control point and a second control point of the plurality of control points is operative to modify a slope associated with the first force profile.

23. The method of claim **19**, wherein the movement of the control point is operative to modify a damping parameter associated with the first force profile.

24. The method of claim **19**, wherein the control point is one of a plurality of control points, and wherein each control point from the plurality of control points is independently moveable.

25. The method of claim **19**, wherein the second force profile is symmetrical about a midpoint independent of the movement of the control point.

26. A processor-readable medium comprising code representing instructions to cause a processor to:

output a signal associated with a first haptic force associated with a first force profile, the first force profile being associated with a graphical representation for display within a graphical user interface, the graphical representation being illustrative of a force versus any one of a position, velocity or acceleration characteristic of the first force profile;

receive a control signal associated with a movement by a user of a control point of the graphical representation, the movement of the control point operative to change the first force profile to a second force profile; and

output a signal associated with a second haptic force, the second haptic force being based on the second force profile and being different from the first haptic force.

27. An apparatus, comprising:

means for outputting a signal associated with a first haptic force associated with a first force profile, the first force profile being associated with a graphical representation for display within a graphical user interface, the graphical representation being illustrative of a force versus any one of a position, velocity or acceleration characteristic of the first force profile;

means for receiving a control signal associated with a movement by a user of a control point of the graphical representation, the movement of the control point operative to change the first force profile to a second force profile; and

means for outputting a signal associated with a second haptic force, the second haptic force being based on the second force profile and being different from the first haptic force.

28. A method, comprising:

retrieving a first force profile associated with a first haptic force, the first force profile being associated with a graphical representation for display within a graphical user interface, the graphical representation being illustrative of a force versus any one of a position, velocity or acceleration characteristic of the first force profile;

receiving a control signal associated with a movement by a user of a control point of the graphical representation, the movement of the control point operative to change the first force profile to a second force profile; and

storing the second force profile associated with a second haptic force, the second haptic force being based on the second force profile and being different from the first haptic force.

29. The method of claim **28**, wherein at least one actuator is configured to output one of either the first haptic force or the second haptic force as a function of displacement of a manipulandum.

30. The method of claim **28**, wherein the movement of the control point is operative to modify a stiffness associated with the first force profile to obtain the second force profile.

31. The method of claim **28**, wherein the control point being a first control point from a plurality of control points, wherein the movement of at least the first control point and a second control point from the plurality of control points being operative to modify a slope associated with the first force profile.

32. The method of claim **28**, wherein the movement of the control point is operative to modify a damping parameter associated with the first force profile.

33. The method of claim **28**, wherein the control point is one of a plurality of control points, and wherein each control point from the plurality of control points is independently moveable.

34. The method of claim **28**, wherein the second force profile is symmetrical about a midpoint independent of the movement of the control point.

35. A processor-readable medium comprising code representing instructions to cause a processor to:

retrieve a first force profile associated with a first haptic force, the first force profile being associated with a graphical representation for display within a graphical user interface, the graphical representation being illustrative of a force versus any one of a position, velocity or acceleration characteristic of the first force profile;

receive a control signal associated with a movement by a user of a control point of the graphical representation, the movement of the control point operative to change the first force profile to a second force profile; and

store the second force profile associated with a second haptic force, the second haptic force being based on the second force profile and being different from the first haptic force.

36. An apparatus, comprising:

means for retrieving a first force profile associated with a first haptic force, the first force profile being associated with a graphical representation for display within a graphical user interface, the graphical representation being illustrative of a force versus a position, velocity or acceleration characteristic of the first force profile;

means for receiving a control signal associated with a movement by a user of a control point of the graphical representation, the movement of the control point operative to change the first force profile to a second force profile; and

means for storing the second force profile associated with a second haptic force, the second haptic force being based on the second force profile and being different from the first haptic force.

* * * * *