US005955799A

United States Patent [19]

Amaya et al.

[11] **Patent Number: 5,955,799**

[45] **Date of Patent: Sep. 21, 1999**

[54] **LINEAR VIBRATION MOTOR AND METHOD FOR CONTROLLING VIBRATION THEREOF**

[75] Inventors: **Hidetoshi Amaya**; **Takio Maekawa**; **Toyokatsu Okamoto**; **Yasuo Ibuki**, all of Hikone, Japan

[73] Assignee: **Matsushita Electric Works, Ltd.**, Osaka-fu, Japan

[21] Appl. No.: **09/030,233**

[22] Filed: **Feb. 25, 1998**

[30] **Foreign Application Priority Data**

Feb. 25, 1997 [JP] Japan 9-041238

[51] **Int. Cl.**[6] **H02K 33/02**

[52] **U.S. Cl.** **310/36**; 15/22.2; 388/937; 388/902; 318/119; 310/50

[58] **Field of Search** 310/36, 50, 12; 318/119, 126, 127, 128, 135, 686; 15/22.2; 388/900, 902, 903, 904, 937

[56] **References Cited**

U.S. PATENT DOCUMENTS

4,583,027	4/1986	Parker et al.	318/128
5,613,259	3/1997	Craft et al.	310/50 X
5,632,087	5/1997	Motohashi et al. .	
5,736,797	4/1998	Motohashi et al.	310/36

FOREIGN PATENT DOCUMENTS

0 349 077 6/1989 European Pat. Off. .

Primary Examiner—Nestor Ramirez
Assistant Examiner—Judson H. Jones
Attorney, Agent, or Firm—Griffin, Butler, Whisenhunt & Szipl, LLP

[57] **ABSTRACT**

A linear vibration motor which includes a vibration system, an electromagnetic driver, a detection system, and a control system. The vibration system includes a driven member or reciprocator which is mounted to a magnetic member for reciprocating movement. The amplitude of the reciprocating movement varies as an inverse function of load on the motor. The electromagnetic driver includes a coil and drives the vibration system by applying an electromagnetic force to the magnetic member, the electromagnetic force being produced by a driving current flowing through the coil. The detection system detects at least one characteristic of the vibration system that is related to a characteristic frequency of the vibration system, and produces a feedback signal indicative of a value of the at least one characteristic. The control system is responsive to the feedback signal, during a primary mode of operation, to controllably vary the driving current flowing through the coil in such a manner as to drive the vibration system in resonance with the characteristic frequency, and determines the existence of a condition that renders the detection system non-functional, and drives the vibration system at a prescribed frequency when it is determined that the condition exists, during a back-up mode of operation.

20 Claims, 9 Drawing Sheets

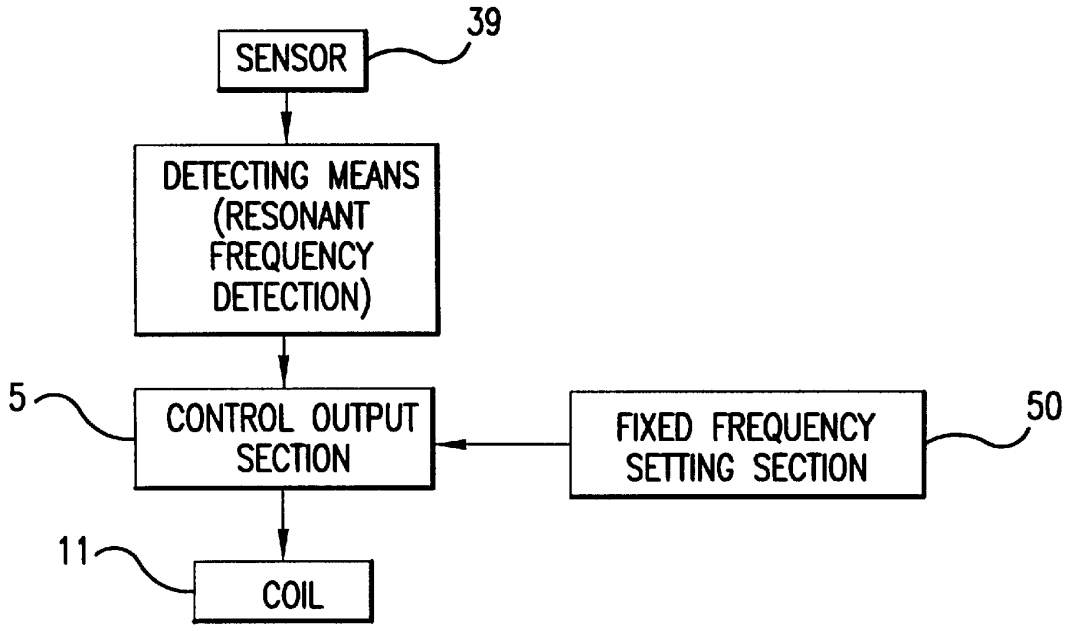

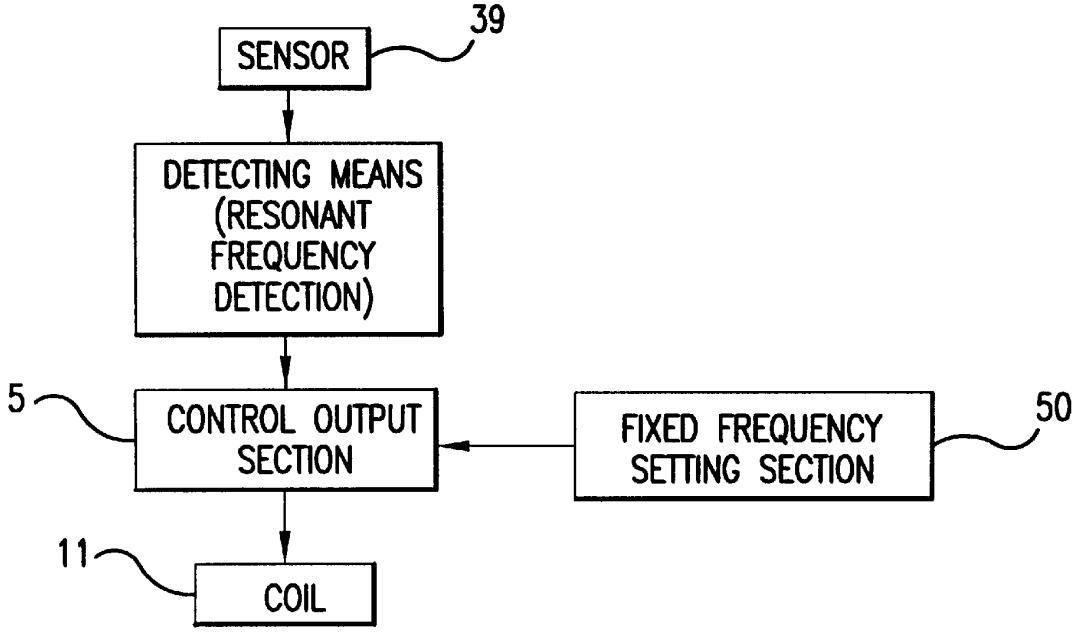
SENSOR
39
DETECTING MEANS (RESONANT FREQUENCY DETECTION)
5
CONTROL OUTPUT SECTION
FIXED FREQUENCY SETTING SECTION
50
11
COIL

FIG.1

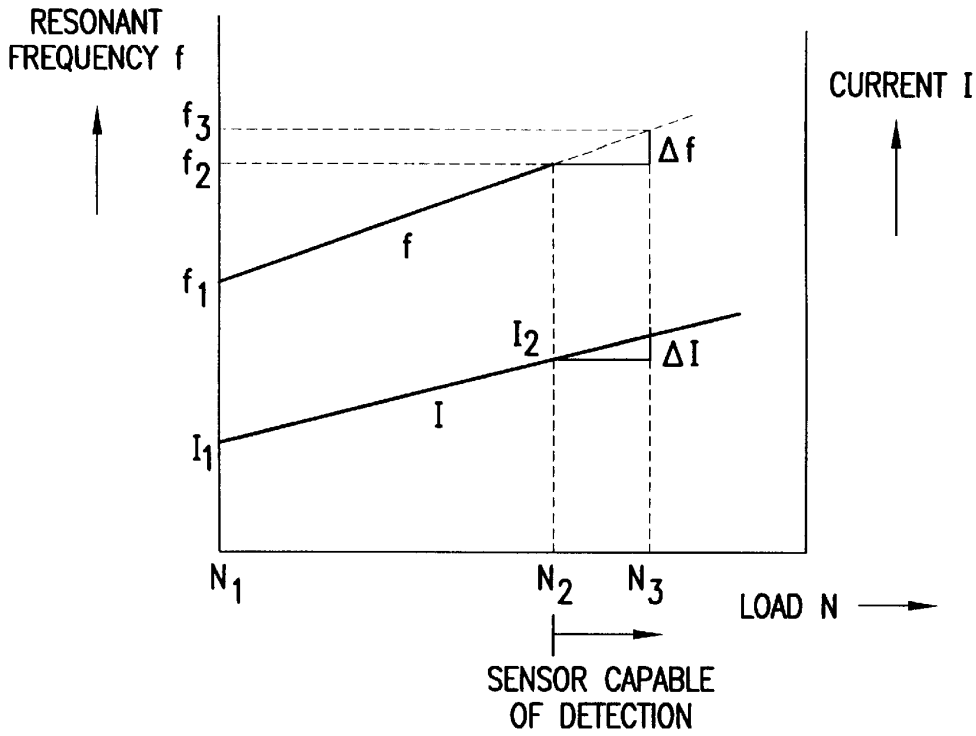
RESONANT FREQUENCY f
CURRENT I
f3
f2
f1
Δf
f
I2
ΔI
I
I1
N1
N2
N3
LOAD N
SENSOR CAPABLE OF DETECTION

FIG.2

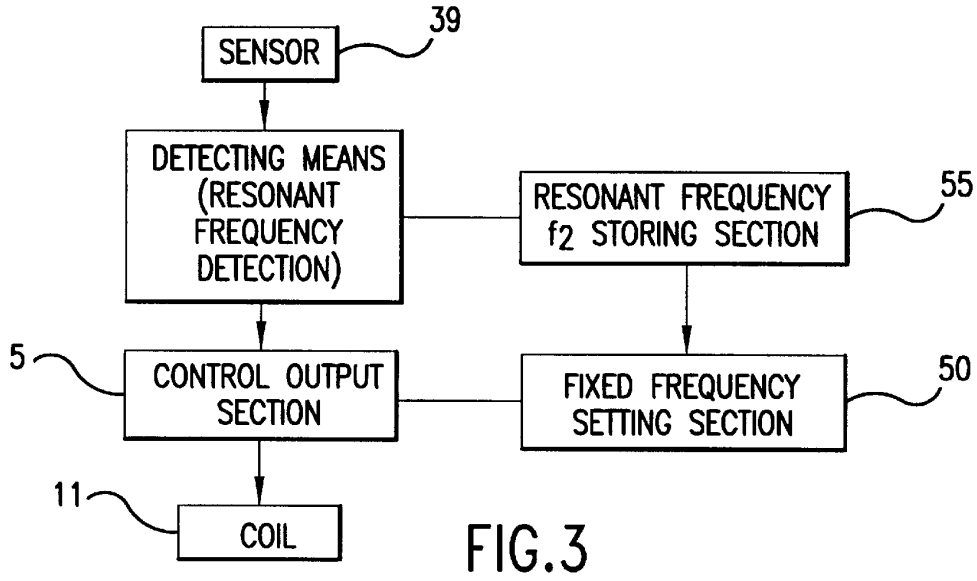
SENSOR
39
DETECTING MEANS (RESONANT FREQUENCY DETECTION)
RESONANT FREQUENCY f2 STORING SECTION
55
5
CONTROL OUTPUT SECTION
FIXED FREQUENCY SETTING SECTION
50
11
COIL

FIG.3

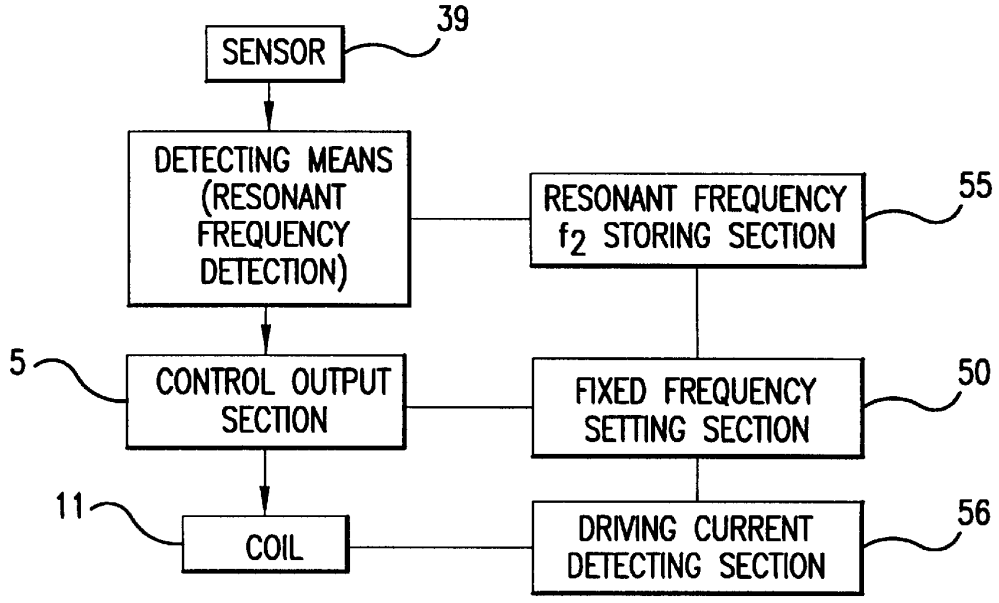
SENSOR
39
DETECTING MEANS (RESONANT FREQUENCY DETECTION)
RESONANT FREQUENCY f_2 STORING SECTION
55
5
CONTROL OUTPUT SECTION
FIXED FREQUENCY SETTING SECTION
50
11
COIL
DRIVING CURRENT DETECTING SECTION
56

FIG.4

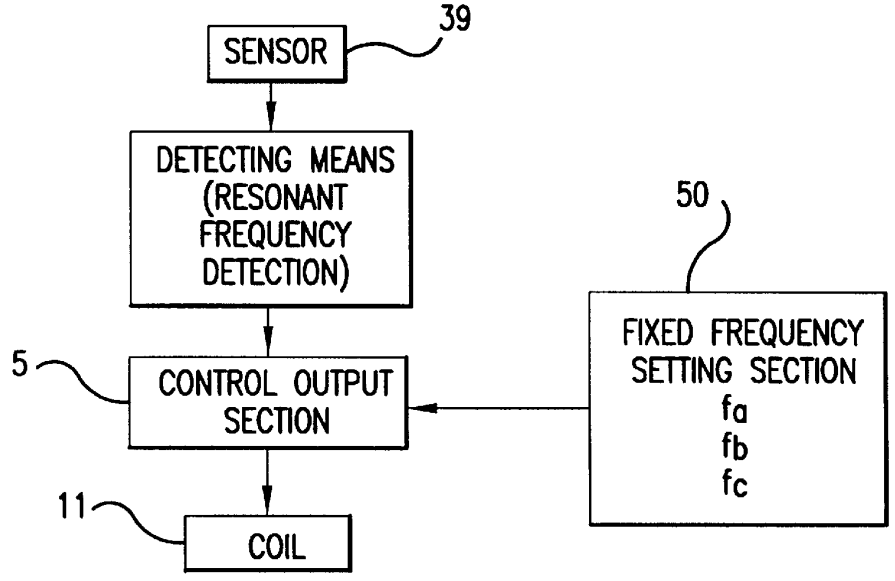
SENSOR
39
DETECTING MEANS (RESONANT FREQUENCY DETECTION)
50
FIXED FREQUENCY SETTING SECTION
fa
fb
fc
5
CONTROL OUTPUT SECTION
11
COIL

FIG.5

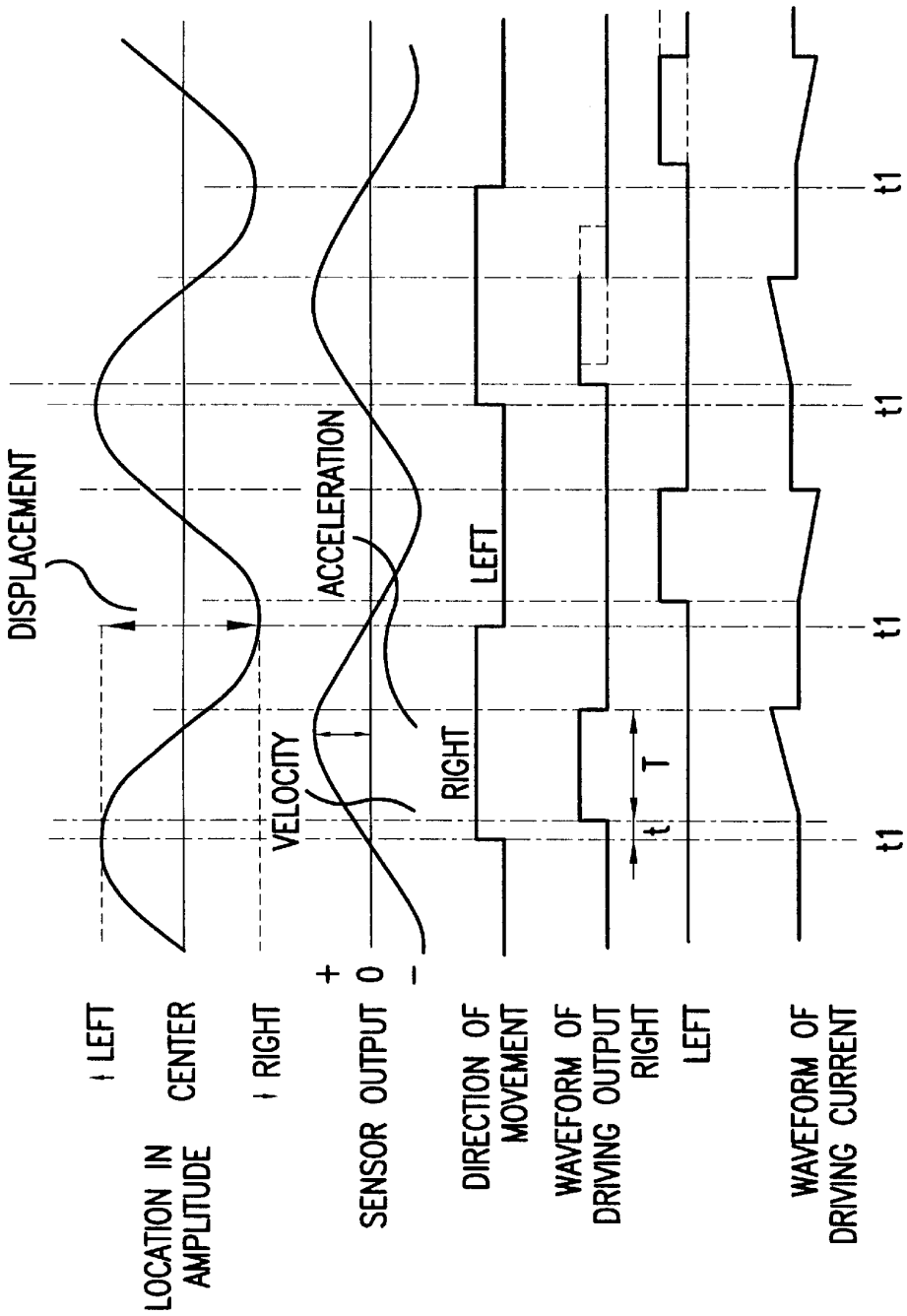
DISPLACEMENT
ACCELERATION
VELOCITY
LEFT
RIGHT
t
T
t1
t1
t1
t1
LOCATION IN AMPLITUDE
LEFT
CENTER
RIGHT
SENSOR OUTPUT
+
0
−
DIRECTION OF MOVEMENT
WAVEFORM OF DRIVING OUTPUT
RIGHT
LEFT
WAVEFORM OF DRIVING CURRENT

FIG.6

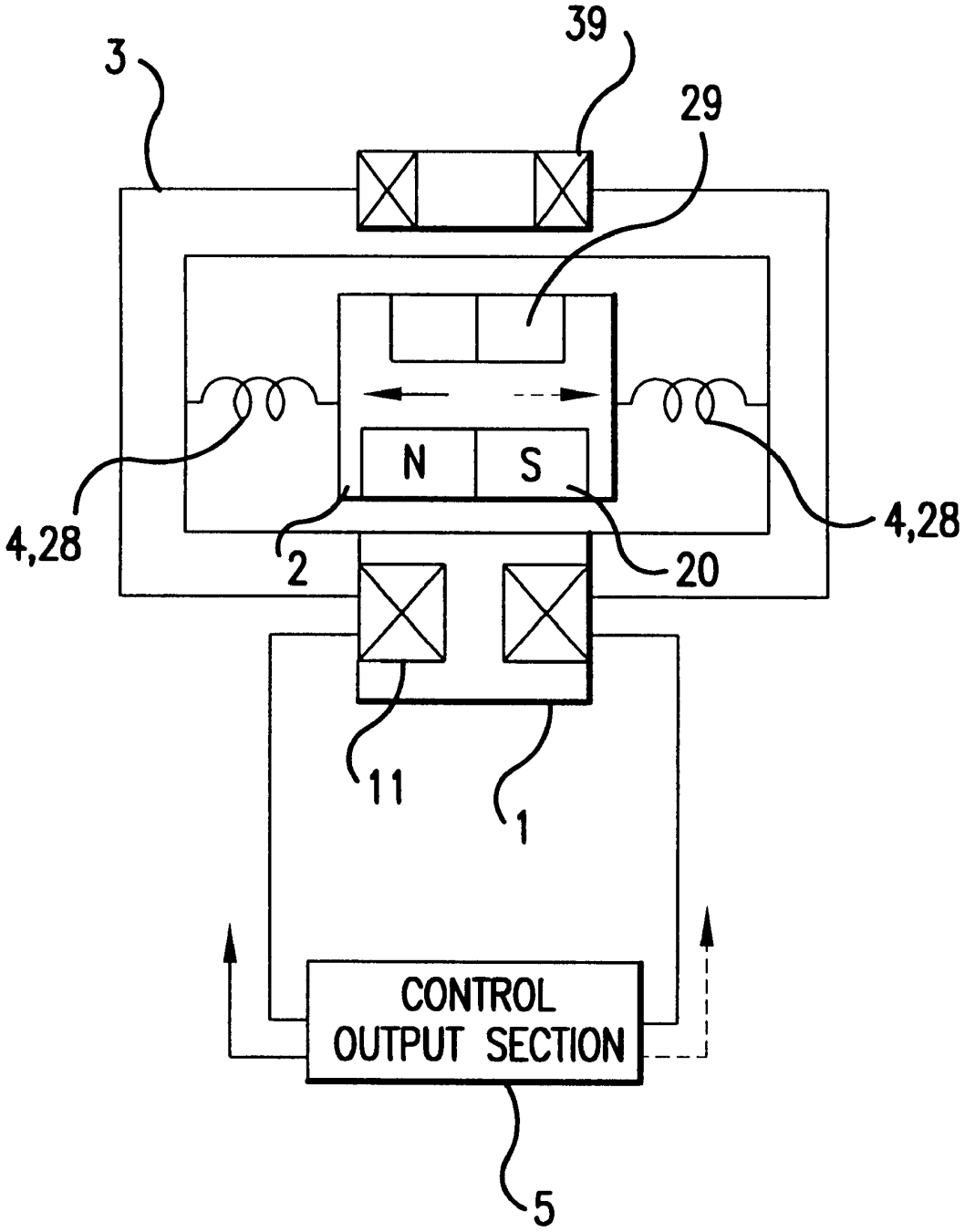

FIG.7

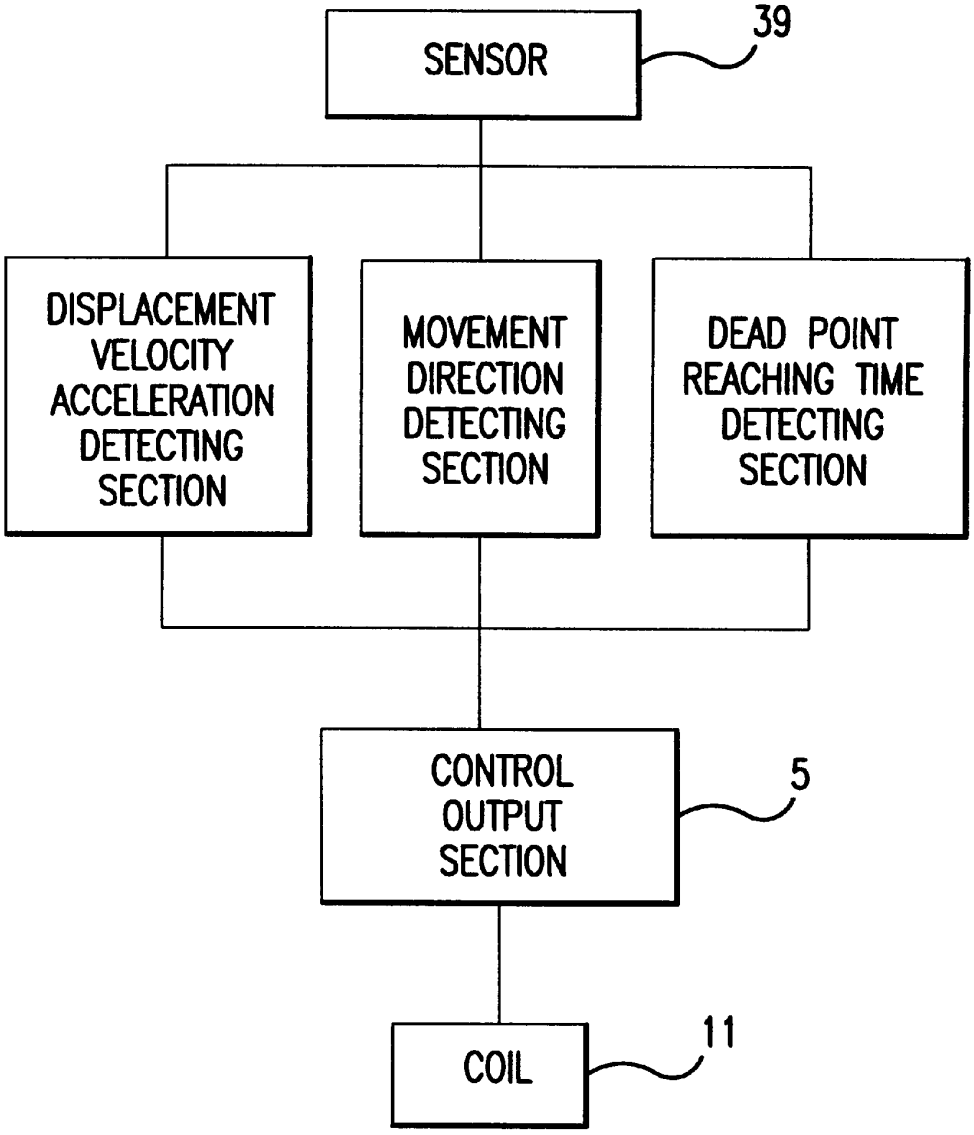
SENSOR
39
DISPLACEMENT VELOCITY ACCELERATION DETECTING SECTION
MOVEMENT DIRECTION DETECTING SECTION
DEAD POINT REACHING TIME DETECTING SECTION
CONTROL OUTPUT SECTION
5
COIL
11

FIG.8

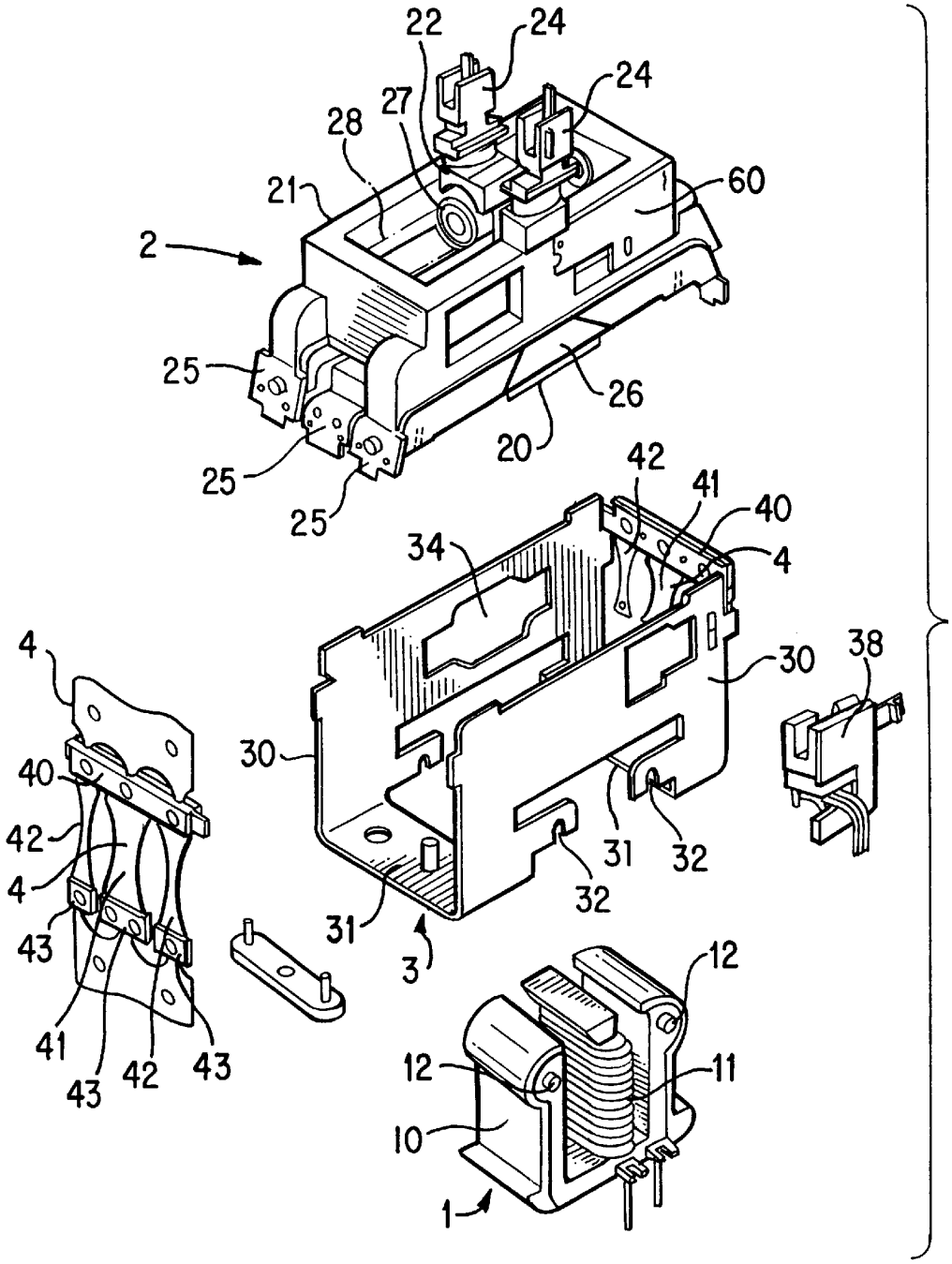
22
24
24
27
28
21
60
2
25
26
20
25
25
42
41
40
34
4
4
30
38
30
40
42
4
43
31
32
32
31
3
41
43
42
43
12
12
11
10
1

FIG. 9

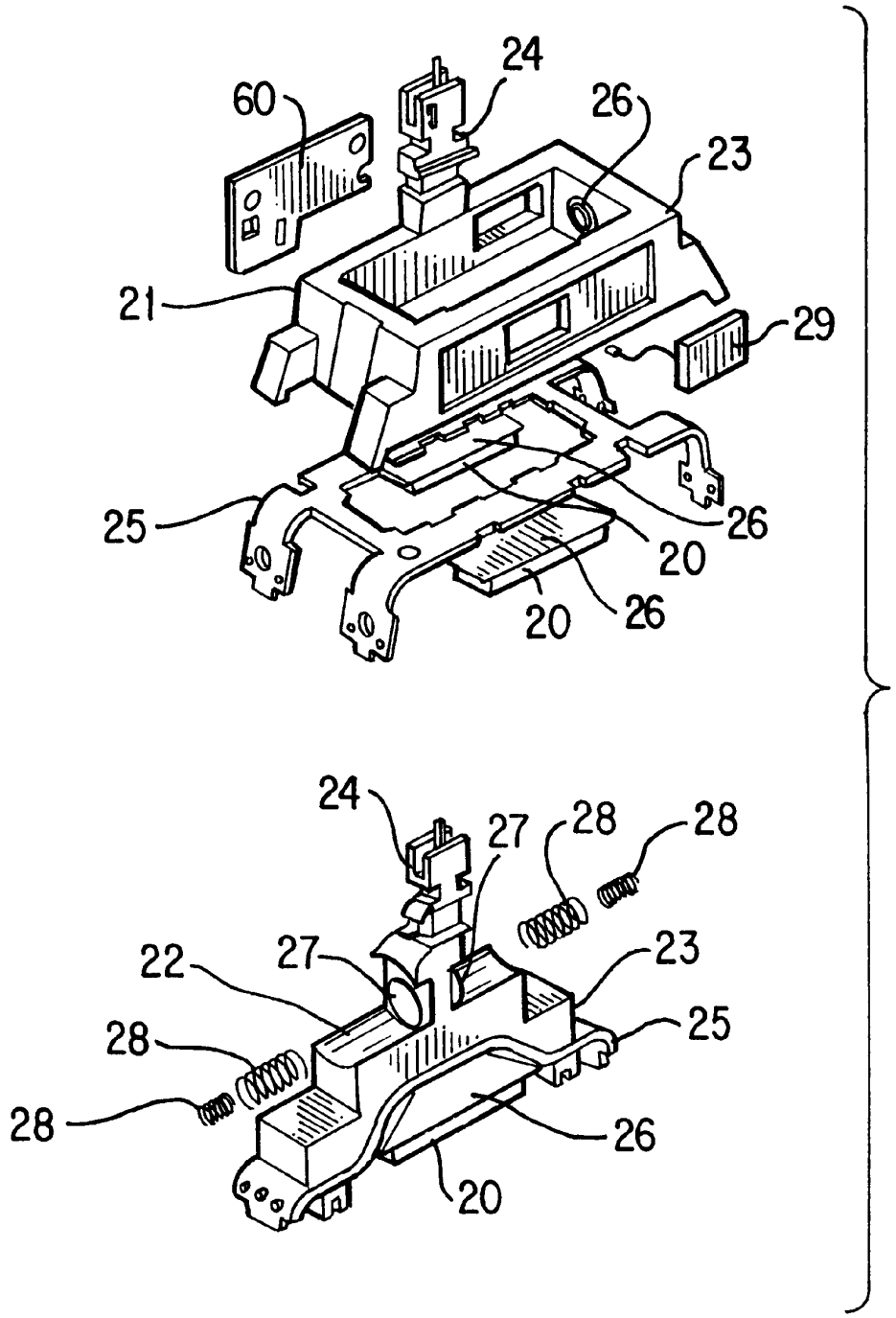

FIG. 10

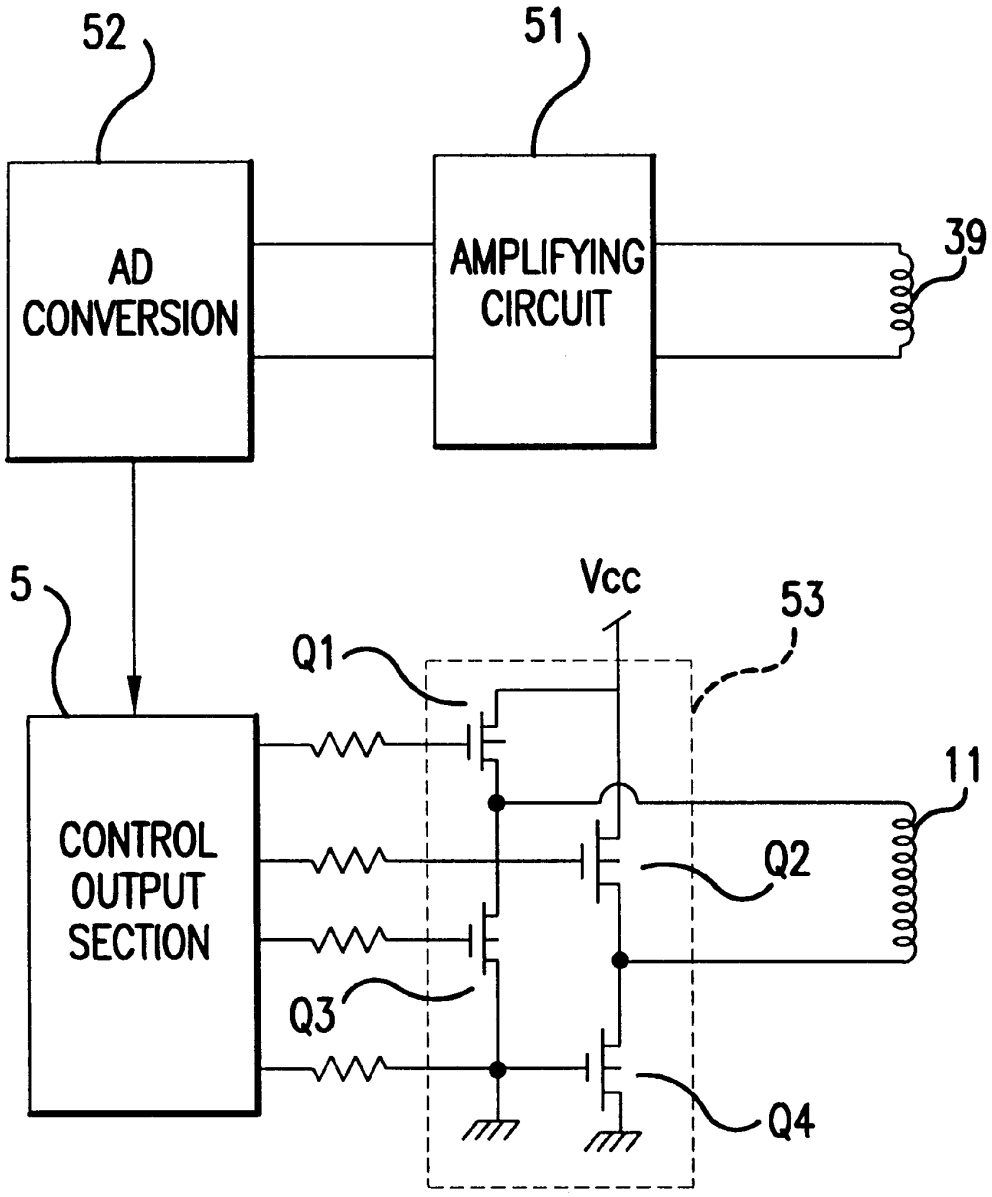
52
51
AD CONVERSION
AMPLIFYING CIRCUIT
39
5
Vcc
53
Q1
11
CONTROL OUTPUT SECTION
Q2
Q3
Q4

FIG. 11

LINEAR VIBRATION MOTOR AND METHOD FOR CONTROLLING VIBRATION THEREOF

BACKGROUND OF THE INVENTION

The present invention relates generally to linear motors, and more particularly, to a linear vibration motor that is suitable for use in an electric shaver, and a method for controlling vibration of the linear vibration motor. This application claims priority under 35 U.S.C. § 119 of Japanese Patent Application No. 09-041238, filed Feb. 25, 1997, the disclosure of which is incorporated herein by reference.

Japanese Unexamined Patent Publication No. 2-52692 discloses a linear motor that is utilized as a source of reciprocating vibration for a reciprocating type electric shaver. This linear vibration motor is a single-phase synchronous motor that includes a reciprocator (or needle) comprised of a rod-like permanent magnet, and a stator having U-shaped iron cores around which coils are wound. A dc voltage having a frequency two times greater than ac frequency is supplied to the coils by a full-wave rectifying circuit to thereby induce reciprocating movement (oscillation) of the reciprocator, and thereby generate vibration.

The electromagnetic force that is required to induce the reciprocating movement of the reciprocator (or needle) is greater than desired. If the reciprocator were supported with a spring to thereby form a spring vibration system (including the reciprocator), and the spring vibration system driven at a frequency equal to a characteristic (resonant) frequency thereof, it would be possible to reduce the amount of energy necessary to drive the spring vibration system. However, the amplitude of the reciprocating vibration could not be kept stable when the spring vibration system is loaded.

As a solution to this problem, there has been proposed a linear motor including a stator comprised of an electromagnet or permanent magnet, a reciprocator comprised of a permanent magnet or electromagnet and supported with a spring, a detection system that detects the displacement, velocity, or acceleration of the reciprocator and produces a feedback signal indicative thereof, and a control system that controls the amount of electric power supplied to a coil of the electromagnet in response to the feedback signal. With this linear motor, even when a characteristic (resonant) frequency of the vibration system varies, e.g., due to changes in load, the control system automatically varies the amount of electric power supplied to the coil of the electromagnet in such a manner as to drive the vibration system at the current resonant frequency (i.e., to drive the vibration system in resonant condition). This is possible because the variation of the resonant frequency is related in a known manner to the displacement, velocity and acceleration of the reciprocator, at least one of which is detected by the detection system.

However, when the vibration system is heavily loaded, with the result that the amplitude of the reciprocating vibration is considerably reduced, the detection system is rendered inoperative, thereby making it impossible to drive the vibration system in resonant condition. In addition, it takes a considerable amount of time for the vibration system to return to resonant condition even after it is unloaded, thereby resulting in a considerable reduction in the efficiency of the linear motor.

Based on the above, it can be appreciated that there presently exists a need in the art for a linear vibration motor which overcomes the above-described drawbacks and shortcomings of the presently available technology. More particularly, there is presently a need for a linear vibration motor which has the capability of appropriately driving the vibration system when the detection system becomes incapable of carrying out its detection function, and the further capability of rapidly returning the vibration system to resonant condition when the detection system becomes capable of carrying out its detection function. The present invention fulfills this need in the art.

SUMMARY OF THE INVENTION

The present invention encompasses a linear vibration motor which includes a vibration system, an electromagnetic driver, a detection system, and a control system. The vibration system includes a driven member which is mounted to a magnetic member for reciprocating movement. The amplitude of the reciprocating movement varies as an inverse function of load on the motor. The electromagnetic driver includes a coil and drives the vibration system by applying an electromagnetic force to the magnetic member, the electromagnetic force being produced by a driving current flowing through the coil. The detection system detects at least one characteristic of the vibration system that is related to a characteristic frequency of the vibration system, and produces a feedback signal indicative of a value of the at least one characteristic. The control system is responsive to the feedback signal, during a primary mode of operation, to controllably vary the driving current flowing through the coil in such a manner as to drive the vibration system in resonance with the characteristic frequency, and determines the existence of a condition that renders the detection system non-functional, and drives the vibration system at a prescribed frequency when it is determined that the condition exists, during a back-up mode of operation.

In a presently preferred embodiment, the at least one characteristic of the vibration system is the displacement, velocity and/or acceleration of the driven member, and the condition is the start-up mode of the motor and/or the amplitude of the reciprocating movement of the driven member falling below a prescribed minimum threshold level. Also, in the presently preferred embodiment, the driven member is a reciprocator assembly, and the vibration system further includes a spring system which supports the driven member. Further, in the presently preferred embodiment, the control system pulse-width modulates the driving current in response to the feedback signal.

The control system can drive the vibration system at a prescribed frequency which is a single, predetermined fixed frequency, or, alternatively, can either controllably vary the prescribed frequency in accordance with variations in the driving current, or successively use a plurality of different frequencies each of which constitutes the prescribed frequency at the time it is produced. In particularly preferred embodiment, the control system includes a portion which determines the instantaneous value of the characteristic frequency of the vibration system and stores the last instantaneous value of the characteristic frequency before the detection system becomes non-functional for use as the prescribed frequency.

The present invention also encompasses, in another of its aspects, a corresponding method of controlling a linear vibration motor of a type which is suitable for use in an electric shaver. Such a linear vibration motor includes a stator comprised of an electromagnet or permanent magnet, a reciprocator comprised of a permanent magnet or electromagnet and supported with a spring, a detection system

which detects at least one of displacement, velocity and acceleration of the reciprocator, and a control system which controls a driving current supplied to a coil of the electromagnet in accordance with a feedback output of the detection system to thereby drive a vibration system including the reciprocator and the spring in resonance with a characteristic frequency of the vibration system. The method includes the steps of determining when a condition exists which prevents the detection system from detecting at least one of displacement, velocity and acceleration of the reciprocator, and using the control system to drive the vibration system at a prescribed frequency when it is determined that the condition exists.

BRIEF DESCRIPTION OF THE DRAWINGS

These and various other objects, features, and advantages of the present invention will be clearly understood with reference to the following Detailed Description of the Preferred Embodiments read in conjunction with the accompanying drawings, in which:

FIG. **1** is a block diagram of an exemplary embodiment of the linear vibration motor of the present invention;

FIG. **2** is a diagram which illustrates the relationship of resonant frequency, current, and load, in the operation of the linear vibration motor of the present invention;

FIG. **3** is a block diagram of another exemplary embodiment of the linear vibration motor of the present invention;

FIG. **4** is a block diagram of another exemplary embodiment of the linear vibration motor of the present invention;

FIG. **5** is a block diagram of another exemplary embodiment of the linear vibration motor of the present invention;

FIG. **6** is a timing diagram which illustrates the waveforms and timing relationship of various operational characteristics of and signals produced by the linear vibration motor during operation thereof;

FIG. **7** is a partial block, partial schematic diagram of a linear vibration motor constructed in accordance with a preferred embodiment of the present invention;

FIG. **8** is a block diagram of the detection and control systems of the linear vibration motor of the linear vibration motor of the preferred embodiment of the present invention;

FIG. **9** is an exploded, perspective view of the linear vibration motor of the preferred embodiment of the present invention;

FIG. **10** is an exploded, perspective view of the reciprocator assembly of the linear vibration motor of the preferred embodiment depicted in FIG. **9**; and

FIG. **11** is a partial block, partial circuit schematic diagram of the linear vibration motor of the preferred embodiment of the present invention.

DETAILED DESCRIPTION OF THE PREFERRED EMBODIMENTS

With reference now to FIGS. **9** and **10**, there can be seen a linear vibration motor constructed in accordance with a preferred embodiment of the present invention. Although the linear vibration motor of the present invention has particular utility in a reciprocating type electric shaver, it should be clearly understood that the present invention is not limited to this or any other particular application. The linear vibration motor includes a stator **1**, a reciprocator assembly **2** (see FIG. **7**,) comprised of two reciprocators **21** and **22**, and a frame **3**.

The stator **1** is comprised of an E-shaped yoke **10** constituted of sintered magnetic material or iron plates, and a coil **11** wound around a central projection of the yoke **10**. Pins **12** stand at opposite end surfaces of the yoke **10**.

The frame **3** has a pair of sidewalls **30**, **30** connected at longitudinal lower ends thereof to each other through bottom plates **31**, **31**, and hence has a U-shaped cross-section. The pins **12** are fixed into grooves **32** of the sidewalls **30** by welding or caulking to thereby fix the stator **1** to the frame **3**.

Each of the reciprocators **21** and **22** includes a driven body **23** composed of synthetic resin, a reinforcing plate **25** and a back yoke **26** both composed of a non-magnetic metal, and a permanent magnet **20** fixed to a lower surface of the driven body **23** through the reinforcing plate **25** and the back yoke **26**. The driven body **23** of the reciprocator **21** is a rectangular frame, and includes a reinforcing plate **25**, a back yoke **26** and a permanent magnet **20** at lower ends of side walls thereof. The reinforcing plates at the opposite sides of the driven body **23** are integrally formed to thereby form the single reinforcing plate **25**. The reinforcing plate **25** is integrally formed with the driven body **23** by insert (or outsert) molding. A coupling **24** that is integrally formed with the driven body **23** is designed to accept internal blades of a reciprocating type electric shaver.

The reciprocators **21** and **22** are connected to the frame **3** through leaf springs **4**, **4**. The leaf spring **4** is formed by punching a metal plate, and includes a support plate **40** attached to the frame **3**, and connecting plates attached to the reciprocators **21** and **22**. A central leaf spring **41** connected to the reciprocator **22** and a pair of leaf springs **42**, **42** connected to the reciprocator **21** are integral with each other through the support plate **40**. By virtue of the support plate **40** being fixed to the opposite ends of the frame **3**, e.g., by welding or the like, and further, by virtue of the connecting plates **43** being fixed to the opposite ends of the reinforcing plates **25** of the reciprocators **21** and **22**, the reciprocators **21** and **22** are suspended from the frame **3**, and the coupling **24** of the reciprocator **22** is located in the reciprocator **21**. A pair of compression coil springs **28**, **28** are supported in a direction of reciprocating movement of the reciprocators **21** and **22** between spring receivers **26**, **26** formed at an inner surface of the reciprocator **21** and spring receivers **27**, **27** formed at the coupling **24** of the reciprocator **22**.

The permanent magnet **20** attached to the reciprocator assembly **2** vertically faces the stator **1** with a predetermined gap therebetween, and is magnetized in a direction of the reciprocating movement (oscillation) of the reciprocator assembly **2**. As illustrated in FIG. **7**, the permanent magnet **20** moves to the right or left in accordance with the direction in which current flows through the coil **11** of the stator **1**, with the leaf springs **4** being deformed. Reciprocating movement and vibration of the reciprocator assembly **2** is effected by switching the direction in which the current flows through the coil **11** at the characteristic (resonant) frequency of the vibration system which includes the reciprocator assembly **2**, the leaf springs **4**, and the compression coil springs **28** (a spring constant component caused. by magnetic attractive force is further added to the system, to be precise).

Since the magnetic poles of the permanent magnet **20** of the reciprocator **21** are arranged oppositely to the magnetic poles of the permanent magnet **20** of the reciprocator **22**, the reciprocating movements of the reciprocators **21** and **22** are out of phase by 180 degrees. When the reciprocators **21** and **22** are urged to move in the outward direction under the influence of the current flowing through the coil **11** of the stator **1**, the springs **28**, **28** are compressed.

It is preferable to vibrate the vibration system in synchronization with a characteristic (resonant) frequency of the vibration system, i.e., to put the vibration system in resonant condition with the dual goals of stable vibration and reduction in vibration energy. In order to achieve these dual goals, the linear vibration motor of the present invention is provided with a detection system which detects a characteristic of the vibration system indicative of the resonant frequency thereof under current load conditions, and a control system which is responsive to feedback signals generated by the detection system to control the magnitude and direction of the current flowing through the coil **11** in such a manner as to maintain resonant operation of the vibration system.

With reference to FIG. **7**, the detection system includes a sensing magnet **29** mounted on the reciprocator assembly **2**, the sensing magnet **29** having magnetic poles arranged in the direction of reciprocating movement of the reciprocators, and a sensor **39** comprised of sensing windings, and supported in an opening **34** of the frame **3**. The control system includes a control output section **5** that controls the magnitude and direction of the current flowing through the coil **11** in accordance with a current (voltage) induced in the sensor **39** when the reciprocator assembly **2** is in vibration.

More particularly, as is illustrated in FIG. **6**, a current induced in the sensor **39** varies in accordance with the amplitude of the reciprocating vibration, the location of the reciprocator assembly **2**, and/or the velocity and direction of the movement of the reciprocator assembly **2**. (The terminology amplitude of the reciprocating vibration as used herein is intended to mean the magnitude of the range of reciprocating movement of the reciprocator assembly **2**.) For example, when the reciprocator assembly **2** reaches a first limit of its range of reciprocating movement, the magnet **29** stops (due to zero velocity of the attached reciprocator assembly **2**), and accordingly, the magnetic flux produced thereby is not changed. Thus, at this time, the voltage output of the sensor **39** is zero. When the reciprocator assembly **2** reaches a midpoint of its range of reciprocating movement, the reciprocator assembly **2** is moving at its maximum velocity, and thus, at this time, the voltage output of the sensor **39** is at its maximum. Accordingly, the maximum velocity of the reciprocator assembly **2** can be detected by detecting the maximum voltage output by the sensor **39**, and the time at which the reciprocator assembly **2** reaches a dead point (i.e., a limit of its range of reciprocating movement) can be detected by detecting the zero output of the sensor **39**. In addition, the direction in which the reciprocator assembly **2** moves can be detected based on the polarity of the output of the sensor **39**.

An exemplary implementation of the detection system and control system employed in the preferred embodiment of the present invention is illustrated in FIG. **11**. As can be seen, the detection system includes the sensor **39**, an amplifying circuit **51**, and an A/D conversion circuit **52**. In operation, the output voltage transmitted by the sensor **39** (which has a sinusoidal waveform, as can be seen in FIG. **6**) is amplified by the amplifying circuit **51**. The amplified output voltage produced by the amplifying circuit **51** is then converted into a digital value by the A/D conversion circuit **52**. The maximum velocity of the reciprocator assembly **2** can be detected by detecting the voltage level of the sensor output a prescribed period of time (t) after the time when the sensor output is zero, or by detecting a maximum voltage level of the sensor output between successive zero outputs. The time at which the direction of movement of the reciprocator assembly **2** reverses can also be detected by detecting when the sensor output is zero. In addition, since current flows through the coil **11** in opposite directions depending upon the direction of movement of the reciprocator assembly **2**, it is possible to detect the direction of movement (i.e., positive or negative stroke) of the reciprocator assembly by detecting the polarity of the output voltage of the sensor **39**.

The control system includes the control output section **5** and driver section **53** coupled to the coil **11**. In operation, the control output section **5** receives the digital output of the A/D conversion circuit **52**, which constitutes a feedback signal indicative of at least one of the displacement, acceleration, and velocity of the reciprocator assembly **2**. The control Output section **5** and driver **53** then adjusts the magnitude and/or direction of the driving current flowing through the coil **11** in accordance with the value of the feedback signal, to thereby maintain operation of the vibration system of the linear vibration motor at the resonant frequency, i.e., to maintain the resonant condition of the vibration system.

For example, if the detection system detects a reduction in the amplitude of the reciprocating vibration (i.e., a reduction in the range of reciprocating movement of the reciprocator assembly **2**), e.g., due to an increased load, the control output section **5** will, in response to the feedback signal from the detection system, increase the driving current (e.g., by increasing a period of time T during which the current is supplied and/or by increasing the maximum current) by an amount sufficient to increase the velocity of the reciprocator assembly **2** in such a manner as to maintain a substantially constant amplitude of the reciprocating vibration. In an exemplary embodiment, the detection system detects the velocity of the reciprocator assembly **2** and produces a digital feedback signal indicative thereof. The control output section **5** includes a memory (e.g., a ROM) which stores a different PWM value for each detected velocity value. In operation, the control output section **5** reads the PWM value from its memory that corresponds to the detected velocity value, and then controls the pulse width of the driving current supplied to the coil **11** in accordance with the read-out PWM value. Since velocity is correlated with displacement and acceleration, displacement or acceleration may be detected in place of velocity, as is diagrammatically illustrated in FIG. **8**. The driver **53** includes four FET switching devices Q**1**–Q**4**. By turning on either the switching devices Q**1** and Q**3** or the switching devices Q**2** and Q**4**, the direction of the current flowing through the coil **11** can be switched, to thereby facilitate reciprocating movement of the reciprocator assembly **2**.

The control output section **5** only permits the driving current to flow in a direction determined in accordance with the detected direction in which the reciprocator assembly **2** moves, in order to thereby prevent the driving current from braking the reciprocator assembly **2**. In addition, the control output section **5** minimizes any required increases of the driving current by utilizing the biasing movement of the spring system, specifically, by allowing the driving current to flow when a prescribed period of time t has passed after the time t_1 at which the direction of movement of the reciprocator assembly **2** reverses. If the driving current were allowed to flow through the coil **11** in a reverse direction before the time t_1, the vibration of the reciprocator assembly **2** would be braked. If the driving current were allowed to flow through the coil **11** in the direction of movement of the reciprocator assembly **2** after the reciprocator assembly **2** has passed the midpoint of its range of reciprocating movement, it would be impossible to realize a multiplied force of the driving (electromagnetic) force exerted by the coil **11** and the driving (repulsion) force exerted by the

spring system, since the driving force caused by the repulsion force of the spring system compressed by the reciprocator assembly **2** will have already diminished. Hence, the time at which the driving current starts to be applied to the coil **11** is prescribed to be in a range between the time at the direction of movement of the reciprocator assembly **2** is reversed and the time at which the reciprocator assembly **2** reaches the midpoint of its range of reciprocating movement. The time at which the reciprocator assembly **2** reaches the midpoint of its range of reciprocating movement can be easily detected as it corresponds to the time at which the sensor **39** transmits its maximum output. The time t may be dynamically adjusted in accordance with the detected velocity or acceleration of the reciprocator assembly **2**.

With the above-described drive control system, it is not necessary to detect the direction of movement of the reciprocator assembly **2** since the direction of movement of the reciprocator assembly **2** is related in a known manner to the polarity of the applied driving current, thereby making it possible to simply successively switch the direction in which the driving current flows through the coil **11**, e.g., by appropriately controlling the switching action of the driver **53**. Further, with the above-described drive control system, it is not necessary to detect the time at which the direction of movement of the reciprocator assembly **2** is reversed, since the frequency at which the direction of current flow through the coil **11** is switched by the driver **53** is synchronized with the characteristic or resonant frequency of the vibration system, thereby making it possible to simply apply the driving current in each direction for a prescribed time interval which can be dynamically adjusted in accordance with the detected resonant frequency of the vibration system. With this technique, the driving current can be applied to flow through the coil **11** in the appropriate direction, even if the reciprocator assembly **2** is so heavily loaded as to be temporarily stopped, and the driving current can be applied to flow through the coil **11**, even if there is dispersion in the characteristic frequency of the vibration system, e.g., due to a difference between the masses of the reciprocators **21**, **22**, or between the spring constants of the compression coil springs **28**, **28**. Thus, it can be ensured that the vibration system converges to the instantaneous characteristic frequency of the vibration system and that the vibration system is vibrated at a substantially constant amplitude of reciprocating vibration.

As previously discussed, the velocity of the reciprocator assembly **2** can be detected on the basis of either the maximum voltage value output by the sensor **39** or on the basis of the time interval between successive times at which the output of the sensor **39** is zero. The latter approach ensures detection of the time at which the direction of movement of the reciprocator assembly **2** reverses without being influenced by any dispersion or variation in the magnetic force of the magnet **29**, and any dispersion or variation in the gap between the magnet **29** and the sensor **39**. Accordingly, the velocity of the reciprocator assembly **2** can be detected more reliably and precisely on the basis of the time interval between successive times at which the output of the sensor **39** is zero.

As an alternative to the detection system which includes the magnet **29** and the sensor **39**, it is possible to use a detection system which includes a slit plate **60** attached to the reciprocator assembly **2** (see FIGS. **9** and **10**) and a photosensor (not shown) aligned with the slit in the slit plate **60**, whereby the output of the photosensor would vary in dependence on the displacement, acceleration, and/or velocity of the reciprocator assembly **2**. In general, a non-contact type detection system is preferred in order not to prevent vibration of the reciprocator assembly **2**.

With the above-described linear vibration motor and control system therefor, if the detection system is rendered incapable of performing its detection function due to the amplitude of the reciprocating vibration of the vibration system falling below a minimum (threshold) level (e.g., when the motor is heavily loaded), the control system supplies the necessary driving current to the coil **11** because the control system no longer receives the feedback signal from the detection system which is necessary for its operation (i.e., the servo feedback loop is opened or interrupted). The present invention is designed to overcome this shortcoming.

More particularly, the linear vibration motor of the present invention includes a fixed frequency setting section **50**, as depicted in FIG. **1**, which stores one (or a plurality of) fixed frequency values which is (are) utilized by the control system when it is determined that a condition exists (e.g., the amplitude of the reciprocating vibration of the vibration system falling below the minimum threshold level) which renders the detection system temporarily incapable of performing its detection function (i.e., non-functional). Specifically, when it is determined that the detection system is temporarily nonfunctional, the control output section **5** reads a fixed frequency value from the fixed frequency setting section **50**, and then switches the driver **53** at that fixed frequency until the operation of the detection system is restored. In this manner, the direction in which the current flows through the coil **11** is switched by the control system at the fixed frequency during times when the detection system is non-functional.

As is depicted in FIG. **2**, when a load N on the linear vibration motor increases from N_1 to N_2, the resonant frequency of the vibration system changes from f_1 to f_2. If it is assumed that the detection system is rendered non-functional when the load N exceeds N_2, any one or more frequencies between f_1 and f_2 may be advantageously employed as the fixed frequency(ies) stored in the fixed frequency setting section **50**. It is most preferable to use the frequency f_2, since the frequency f_2 has a range of variance due to differences between the masses of the reciprocators **21**, **22** or differences between the spring constants of the compression coil springs **28**, **28**. More particularly, as is depicted in FIG. **3**, the linear vibration motor of the present invention most preferably includes a resonant frequency (f_2) storing section **55** which stores the resonant frequency (f_2) which is detected by the detection system immediately before detection of the condition which causes the detection system to be rendered temporarily non-functional (e.g., the value of N exceeding (N_2). The resonant frequency f_2 stored by the resonant frequency storing section **55** can then be supplied to the fixed frequency setting section **50** for storage therein and subsequent use by the control system.

With additional reference to FIG. **2**, when the load N is increased to $N_3>N_2$, the driving current I is increased by ΔI. Hence, a frequency variation Äf in dependence on the current variation ΔI may be predicted, and the fixed frequency f_2 may be adjusted in accordance with the predicted frequency variation to thereby produce a frequency f_3 ($=f_2+\Delta f$) for driving the coil **11**. FIG. **4** is a block diagram of another exemplary embodiment of the linear motor of the present invention that incorporates a driving current detecting section **56** which performs this operation and supplies the predicted current and/or frequency variations to the fixed frequency setting section **55** for use thereby in adjusting the fixed frequency f_2.

Another exemplary embodiment of the linear vibration motor of the present invention is depicted in FIG. **5**, wherein it can be seen that the fixed frequency setting section **50** is designed to store a plurality of prescribed frequencies f_a, f_b and f_c. With this embodiment, the control output section **5** can successively read out the different frequency values f_a, f_b, and f_c, and then successively drive the coil **11** at these frequencies during times when the detection system is non-functional. For instance, with additional reference to FIG. **2**, the frequencies f_a, f_b and f_c may be set equal to f_1, f_2 and f_3, respectively.

The detection system is also non-functional during start-up of the linear vibration motor. Accordingly, the control system can drive the coil **11** at the prescribed frequency(ies) stored in the fixed frequency setting section **50** during start-up of the linear vibration motor. Otherwise stated, the start-up mode of the motor is also a condition of the motor which can be detected to switch the control system into the back-up mode of operation.

Because the spring system is driven even when the detection system is non-functional, it is possible to rapidly return the spring system back to resonant condition after the detection system becomes functional again. It is believed that using the resonant frequency f_2 as the prescribed back-up frequency for switching the driving current applied to the coil **11** enables the spring system to be most rapidly returned to resonant condition (i.e., a condition in which the frequency at which the direction of the driving current is switched is synchronized with the characteristic (resonant) frequency of the vibration system), particularly when this value is adjusted in accordance with predicted variations in the driving current based on predicted variations in the resonant frequency, e.g., due to variations in load.

Although various embodiments of the present invention have been described in detail hereinabove, it should be clearly understood that many variations and/or modifications of the basic inventive concepts taught herein that may appear to those reasonably skilled in the art will still fall within the spirit and scope of the present invention as defined in the appended claims.

What is claimed is:

1. A method of controlling a linear vibration motor which includes a stator comprised of an electromagnet or permanent magnet, a reciprocator comprised of a permanent magnet or electromagnet and supported with a spring; a detection system which detects at least one of displacement, velocity and acceleration of the reciprocator; and a control system which controls a driving current supplied to a coil of the electromagnet in accordance with a feedback output of the detection system to thereby drive a vibration system including the reciprocator and the spring in resonance with a characteristic frequency of the vibration system, the method including the steps of:

determining when a condition exists which prevents the detection system from detecting at least one of displacement, velocity and acceleration of the reciprocator; and

using the control system to drive the vibration system at a prescribed frequency when it is determined that the condition exists.

2. The method of controlling a linear vibration motor as set forth in claim **1**, further including the steps of:

determining and storing an instantaneous value of said characteristic frequency, and

setting said prescribed frequency to a last instantaneous value of the characteristic frequency when it is determined that the condition exists.

3. The method of controlling a linear vibration motor as set forth in claim **1**, further including the step of varying the prescribed frequency in accordance with variations in the driving current.

4. The method of controlling a linear vibration motor as set forth in claim **1**, further including the step of driving the vibration system at the prescribed frequency during start-up of the vibration system.

5. The method of controlling a linear vibration motor as set forth in claim **1**, wherein the prescribed frequency is varied by successively using a plurality of different predetermined fixed frequencies.

6. A linear vibration motor, including:

a vibration system that includes a driven member which is mounted to a magnetic member for reciprocating movement, wherein an amplitude of the reciprocating movement varies as an inverse function of load on the motor;

an electromagnetic driver that includes a coil and which drives the vibration system by applying an electromagnetic force to the magnetic member, the electromagnetic force being produced by a driving current flowing through the coil;

a detection system which detects at least one characteristic of the vibration system that is related to a characteristic frequency of the vibration system, and which produces a feedback signal indicative of a value of the at least one characteristic; and

a control system which is responsive to the feedback signal, during a primary mode of operation, to controllably vary the driving current flowing through the coil in such a manner as to drive the vibration system in resonance with the characteristic frequency, and which determines the existence of a condition that renders the detection system non-functional, and drives the vibration system at a prescribed frequency when it is determined that the condition exists, during a back-up mode of operation.

7. The linear vibration motor as set forth in claim **6**, wherein the at least one characteristic of the vibration system comprises at least one of displacement, velocity, and acceleration of the driven member.

8. The linear vibration motor as set forth in claim **6**, wherein the condition comprises a start-up mode of the motor.

9. The linear vibration motor as set forth in claim **6**, wherein the condition comprises the load on the motor exceeding a prescribed maximum threshold level.

10. The linear vibration motor as set forth in claim **6**, wherein the condition comprises the amplitude of the reciprocating movement falling below a prescribed minimum threshold level.

11. The linear vibration motor as set forth in claim **6**, wherein the driven member comprises a reciprocator.

12. The linear vibration motor as set forth in claim **6**, wherein the control system is responsive to the feedback signal to controllably vary the driving current flowing through the coil in such a manner as to maintain a substantially constant value of the amplitude of the reciprocating movement.

13. The linear vibration motor as set forth in claim **6**, wherein the vibration system further includes a spring system which supports the driven member.

14. The linear vibration motor as set forth in claim **6**, wherein the control system includes means for pulse-width modulating the driving current in response to the feedback signal.

15. The linear vibration motor as set forth in claim **6**, wherein the control system includes a frequency setting section which stores the prescribed frequency.

16. The linear vibration motor as set forth in claim **6**, wherein the control system includes a frequency governing section which includes:

a first portion which determines the instantaneous value of the characteristic frequency; and,

a second portion which determines and stores the last instantaneous value of the characteristic frequency before the existence of the condition that renders the detection system non-functional is determined, wherein the last instantaneous value constitutes the prescribed frequency.

17. The linear vibration motor as set forth in claim **6**, wherein the control system includes:

a first portion which stores a plurality of different frequencies; and

a second portion which successively produces the different frequencies at prescribed time intervals, wherein each of the different frequencies constitutes the prescribed frequency at the time it is produced.

18. The linear vibration motor as set forth in claim **6**, wherein the control system varies the prescribed frequency in accordance with variations in the driving current.

19. The linear vibration motor as set forth in claim **6**, wherein the electromagnetic driver includes a stator comprised of an electromagnet having the coil wound therearound.

20. A linear vibration motor, including:

a vibration system that includes a driven member which is mounted to a magnetic member for reciprocating movement, wherein an amplitude of the reciprocating movement varies as an inverse function of load on the motor;

electromagnetic driver means for driving the vibration system by applying an electromagnetic force to the magnetic member, the electromagnetic driver means including a coil and the electromagnetic force being produced by a driving current flowing through the coil;

detection means for detecting at least one characteristic of the vibration system that is related to a characteristic frequency of the vibration system, and which produces a feedback signal indicative of a value of the at least one characteristic; and,

control means responsive to the feedback signal, during a primary mode of operation, for controllably varying the driving current flowing through the coil in such a manner as to drive the vibration system in resonance with the characteristic frequency, and for determining the existence of a condition that renders the detection system non-functional, and driving the vibration system at a prescribed frequency when it is determined that the condition exists, during a back-up mode of operation.

* * * * *