US 20050275294A1

(19) United States

(12) Patent Application Publication

(10) Pub. No.: US 2005/0275294 A1

(43) Pub. Date: Dec. 15, 2005

Izumi et al.

(54) DRIVING UNIT

(76) Inventors: **Tomohiro Izumi**, Osaka-shi (JP); **Yasuo Ibuki**, Hikone-shi (JP); **Mikihiro Yamashita**, Echi-gun (JP); **Hideaki Abe**, Neyagawa-shi (JP)

Correspondence Address:
RADER FISHMAN & GRAUER PLLC
LION BUILDING
1233 20TH STREET N.W., SUITE 501
WASHINGTON, DC 20036 (US)

(21) Appl. No.: **11/150,284**

(22) Filed: **Jun. 13, 2005**

(30) **Foreign Application Priority Data**

Jun. 14, 2004 (JP) 2004-176156

Publication Classification

(51) **Int. Cl.**[7] **H02K 33/00**; H02P 1/00

(52) **U.S. Cl.** **310/15**; 318/119

(57) **ABSTRACT**

A driving unit of the present invention comprises a moving element, an elastic body configured to support the moving element, a permanent magnet fixed on said moving element, an electromagnet disposed to be opposed to said permanent magnet, and a controller. The moving element and the elastic body constitute a resonance system. The electromagnet includes a magnetic material and a coil wounded around the magnetic material. The controller magnetizes the magnetic material by feeding a current through the coil and gives a vibration force to the moving element by magnetic force acting between the magnetic material and the permanent magnet. The feature of the present invention resides in that the controller determines a current waveform necessary for an intended motion of the moving element, and applies a voltage to the coil intermittently so that a current in the form of the current waveform flows through said coil.

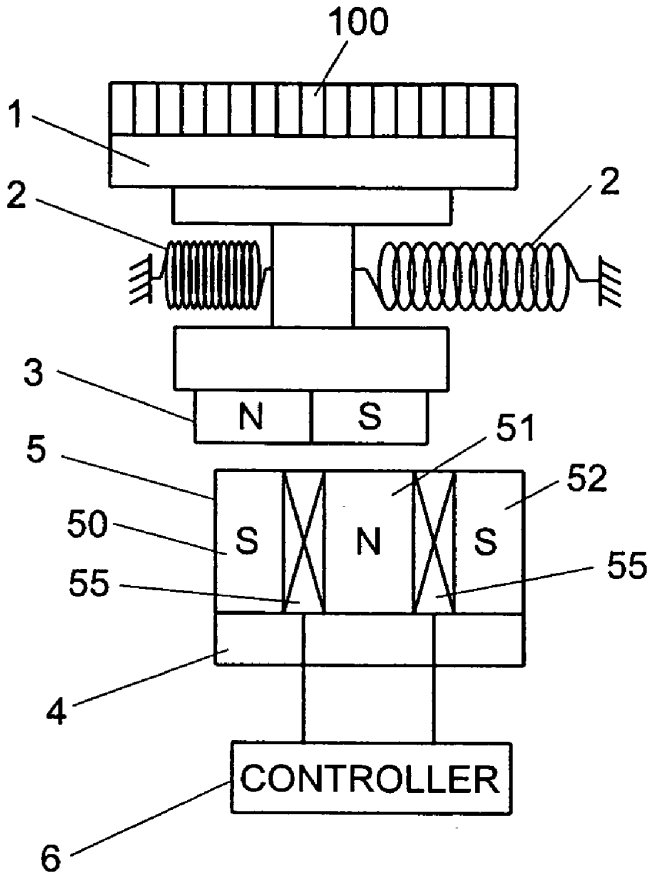

FIG. 1A

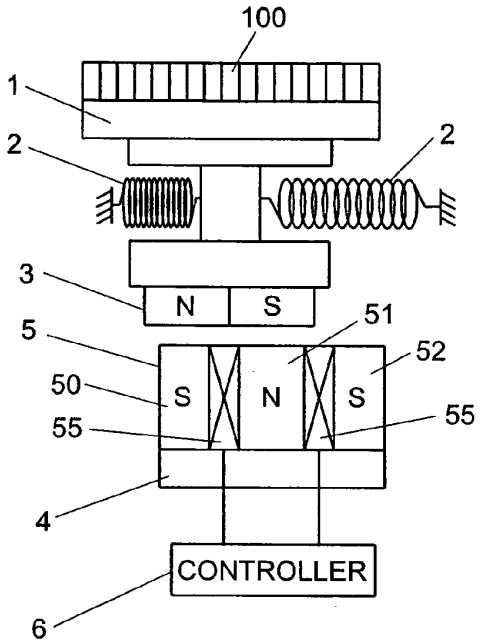

FIG. 1B

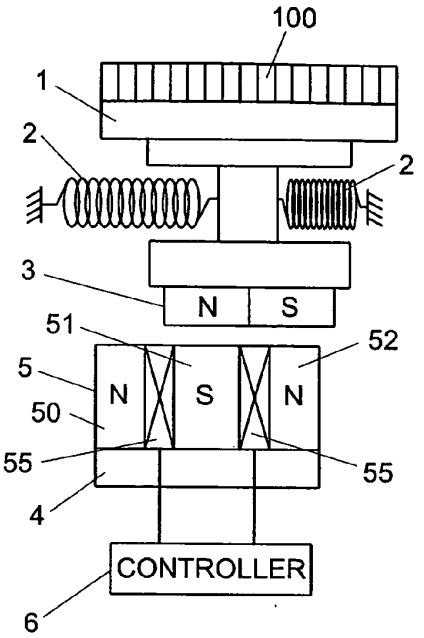

FIG. 2

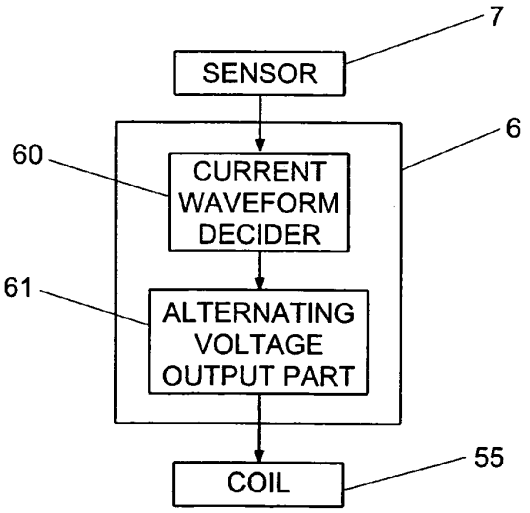

FIG. 3A

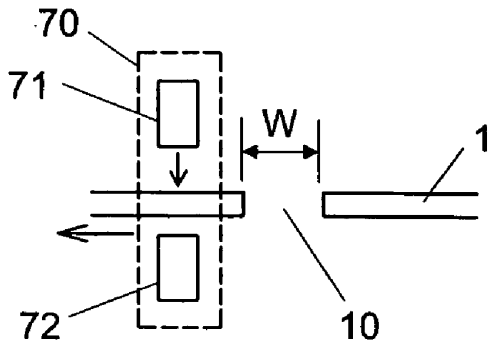

FIG. 3B

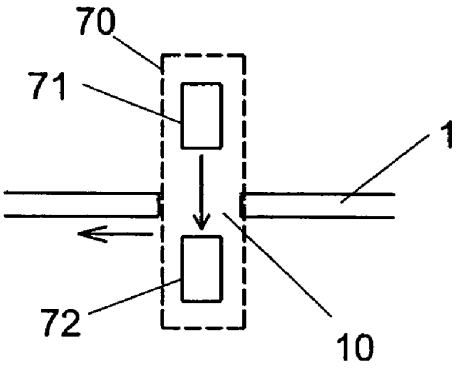

FIG. 3C

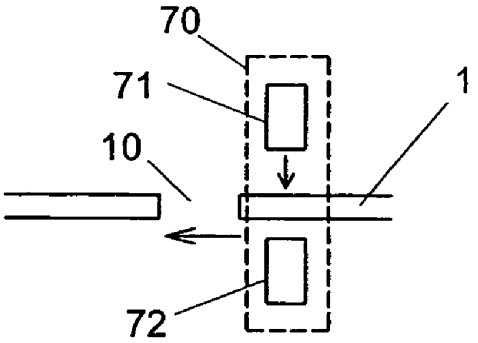

FIG. 4

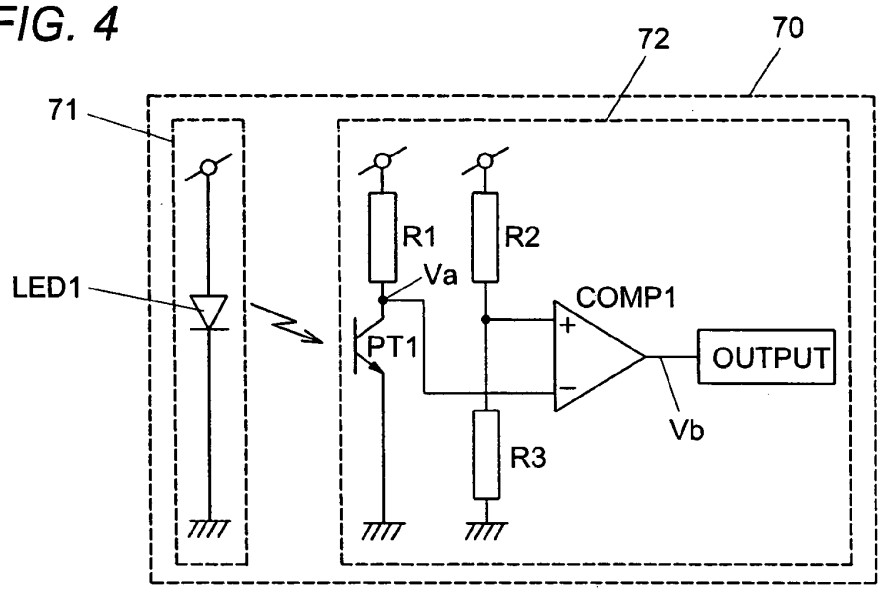
72
70
71
LED1
R1
R2
Va
COMP1
PT1
OUTPUT
Vb
R3

FIG. 5

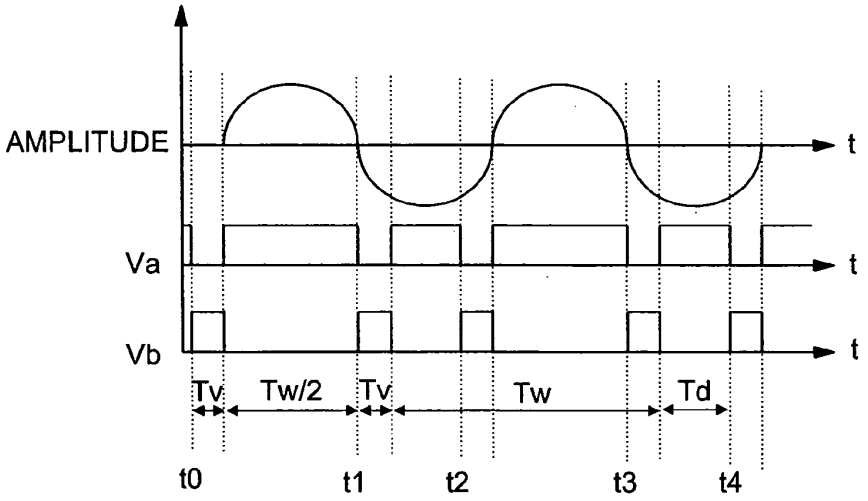
AMPLITUDE
t
Va
t
Vb
t
Tv
Tw/2
Tv
Tw
Td
t0
t1
t2
t3
t4

FIG. 6

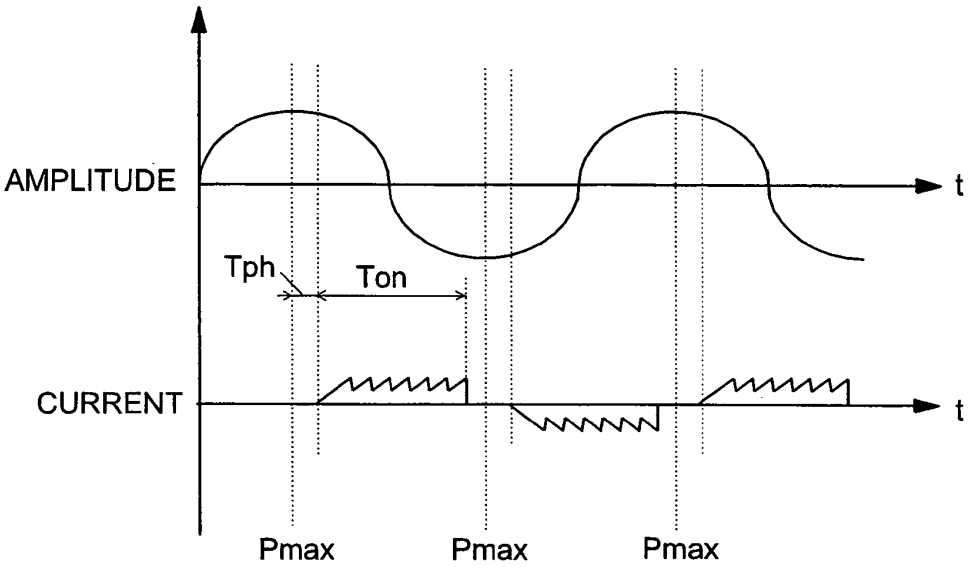

FIG. 7A

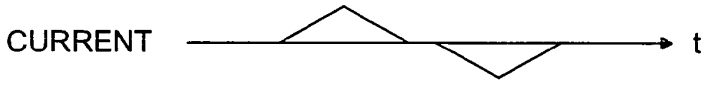

FIG. 7B

FIG. 7C

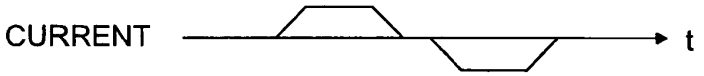

FIG. 7D

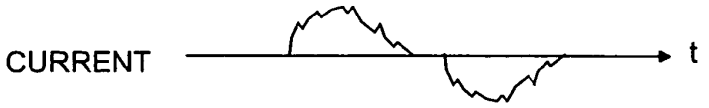

FIG. 7E

FIG. 8

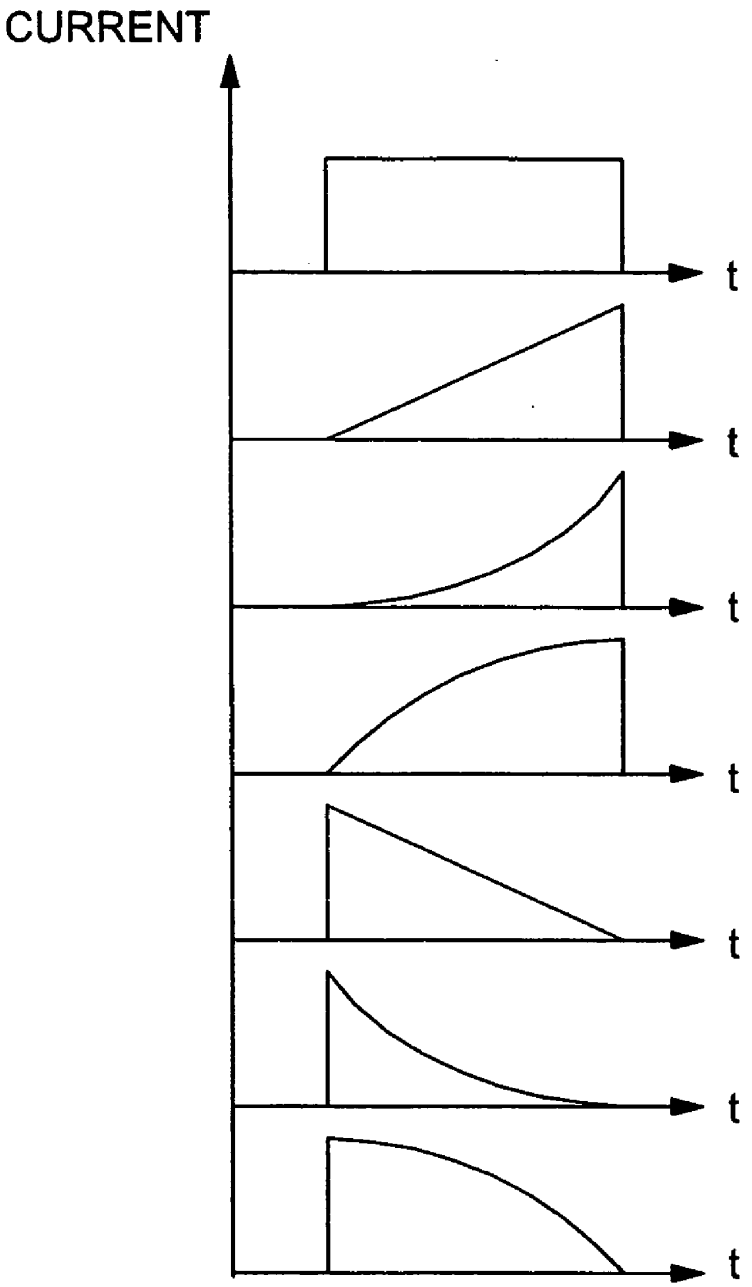

FIG. 9

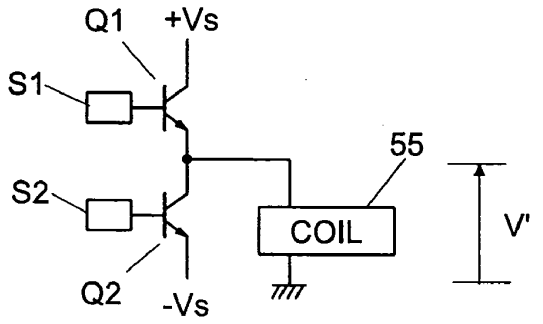
Q1
+Vs
S1
55
S2
COIL
V'
Q2
-Vs

FIG. 10

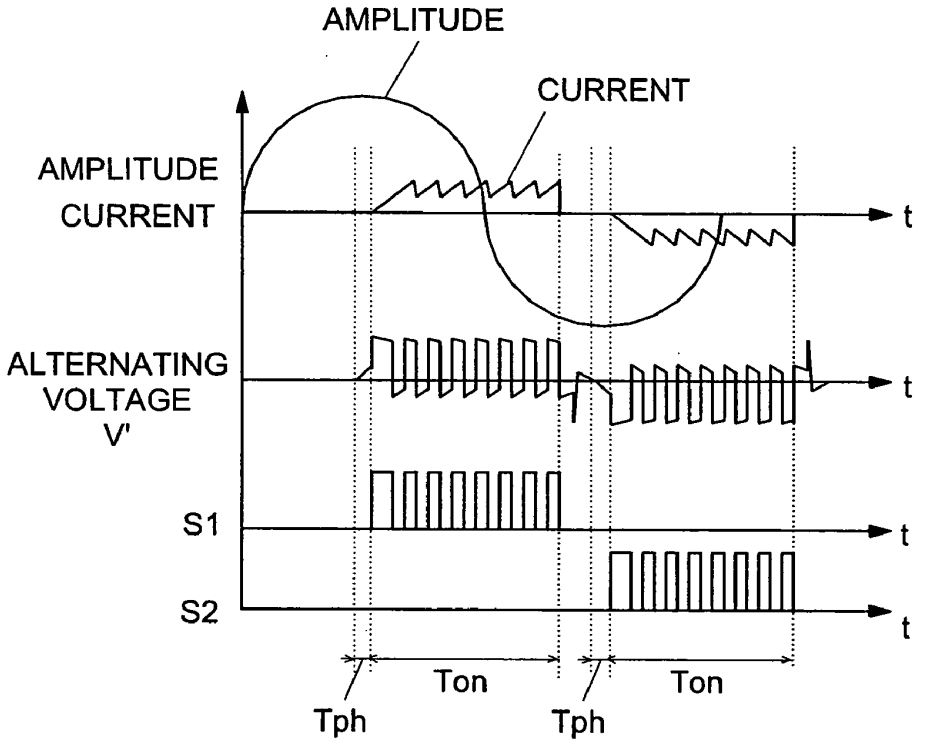
AMPLITUDE
CURRENT
AMPLITUDE
CURRENT
t
ALTERNATING
VOLTAGE
V'
t
S1
t
S2
t
Ton
Ton
Tph
Tph

FIG. 11A

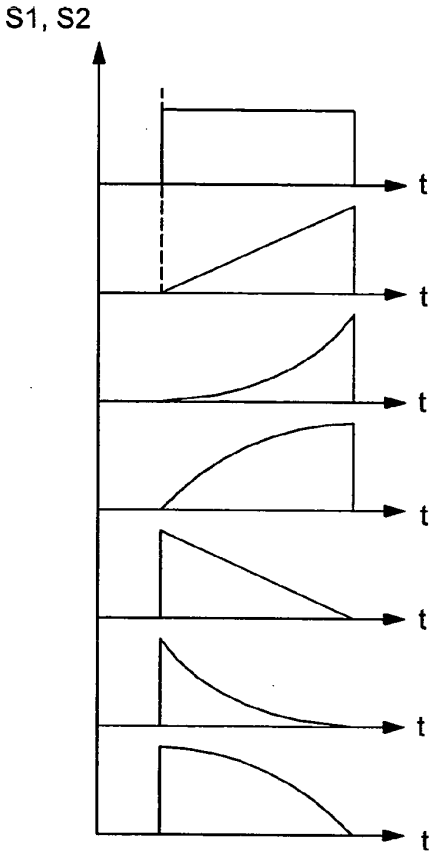

FIG. 11B

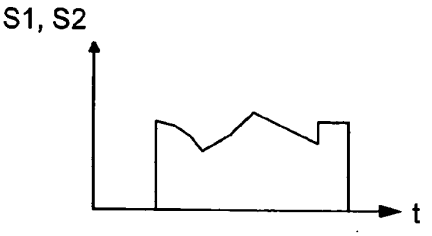

FIG. 12

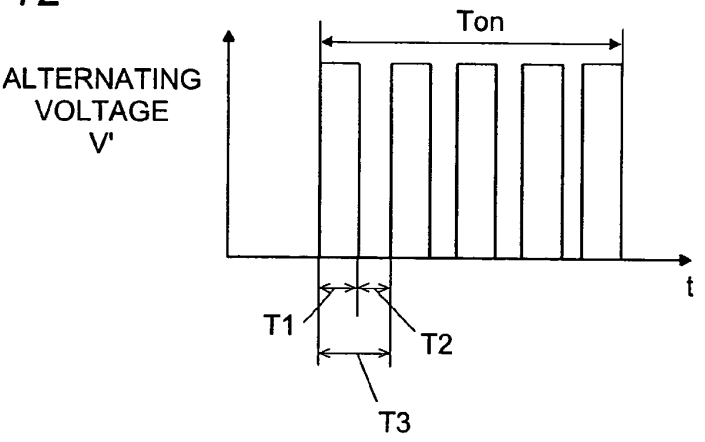

FIG. 13A

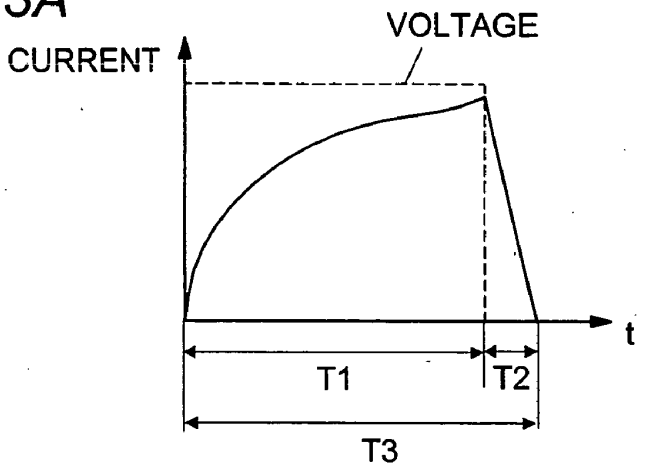

FIG. 13B

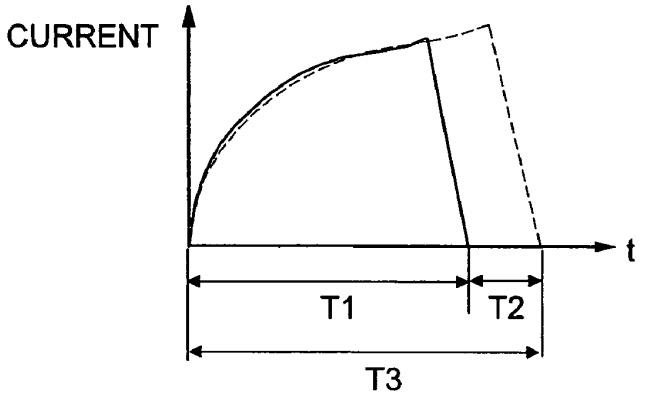

FIG. 13C

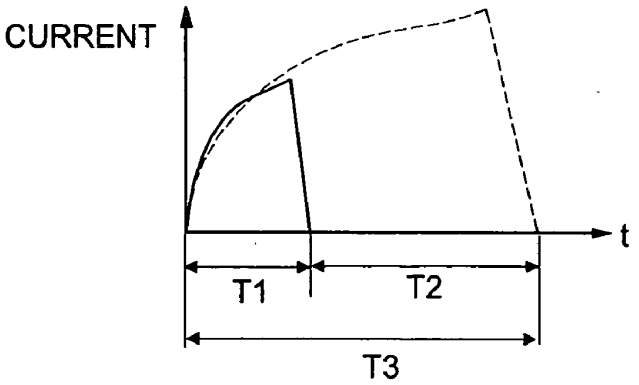

FIG. 14A

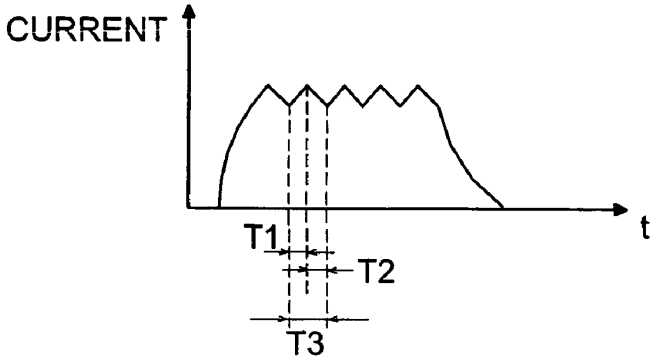

FIG. 14B

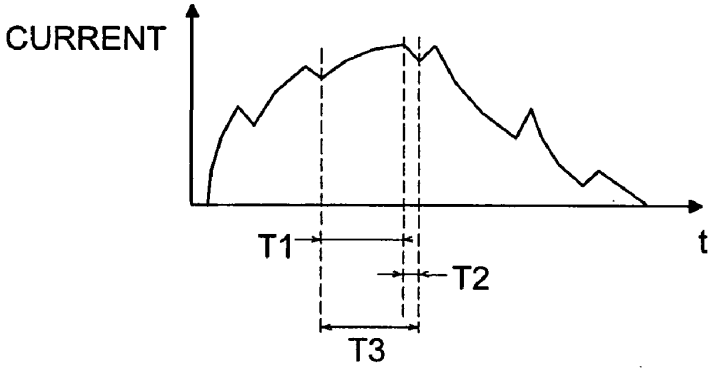

FIG. 14C

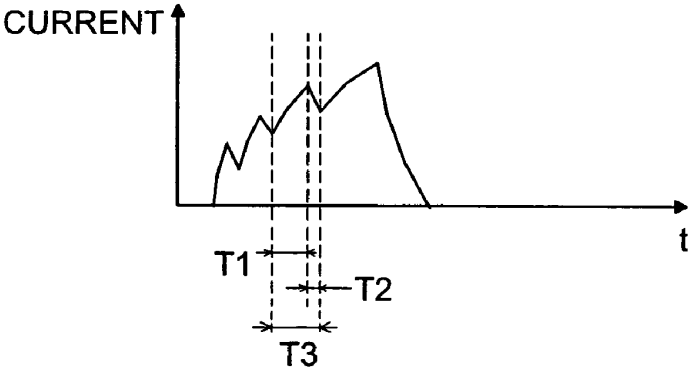

FIG. 15

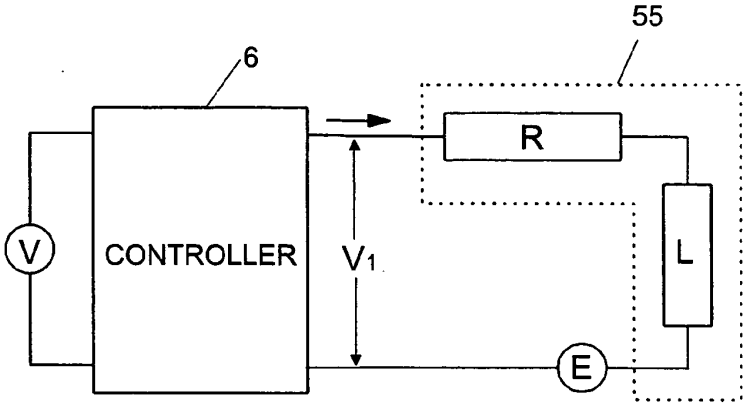
55
6
R
V
CONTROLLER
V1
L
E

FIG. 16

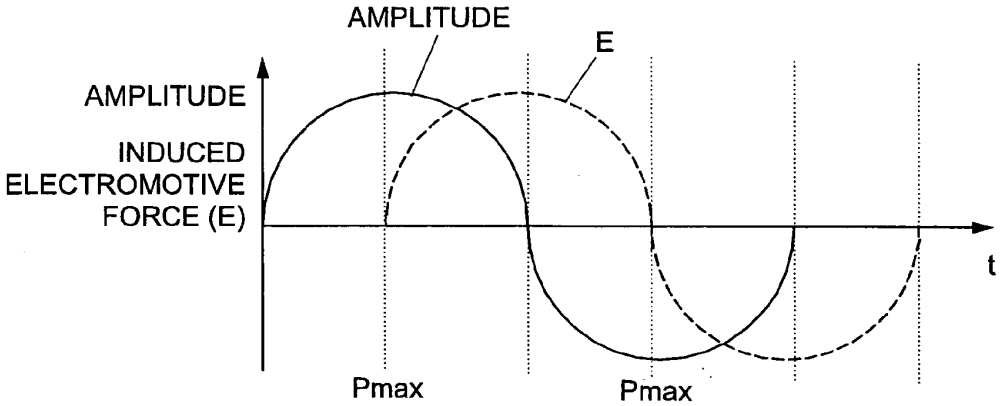
AMPLITUDE
E
AMPLITUDE
INDUCED
ELECTROMOTIVE
FORCE (E)
t
Pmax
Pmax

FIG. 17

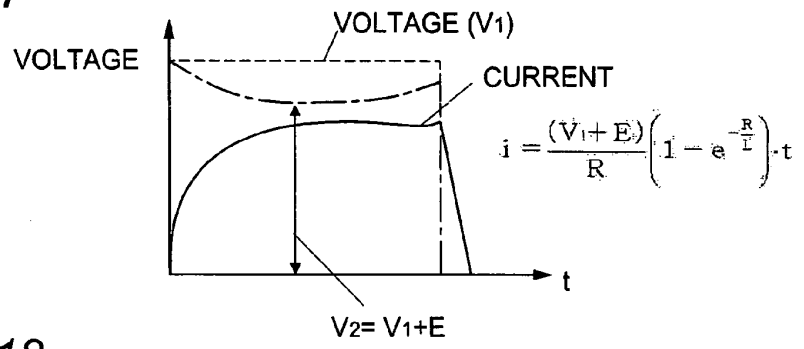

FIG. 18

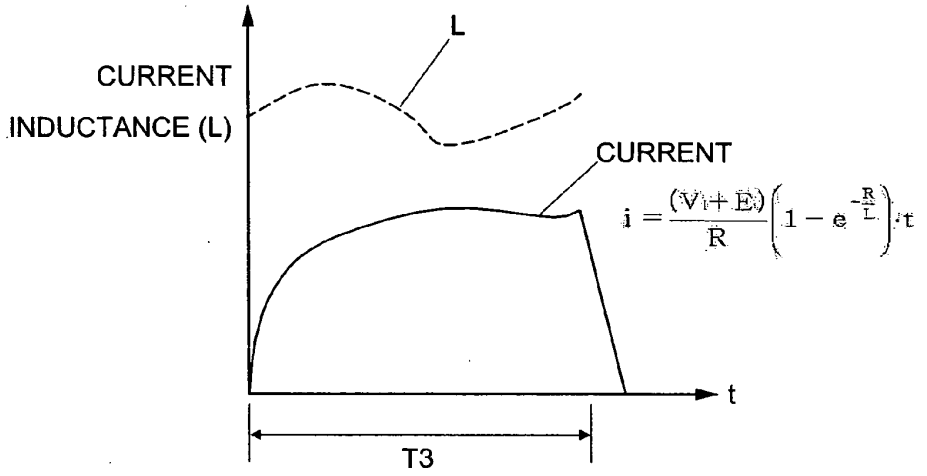

FIG. 19

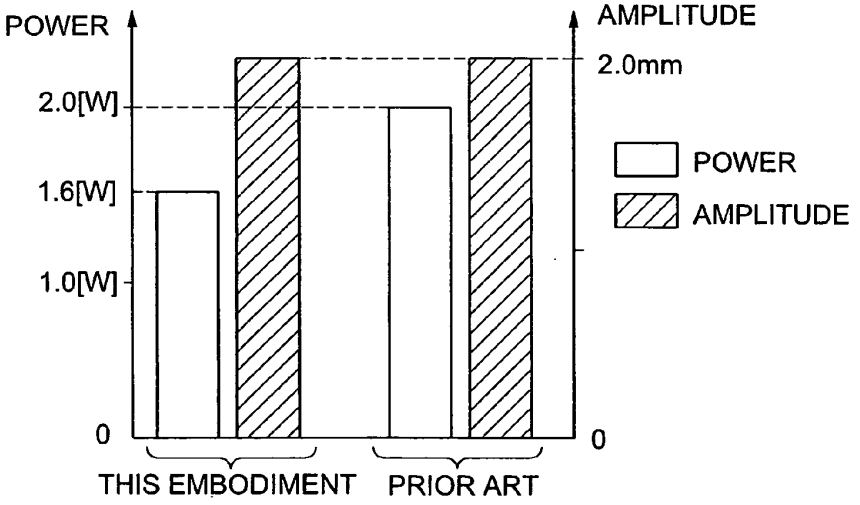

FIG. 20

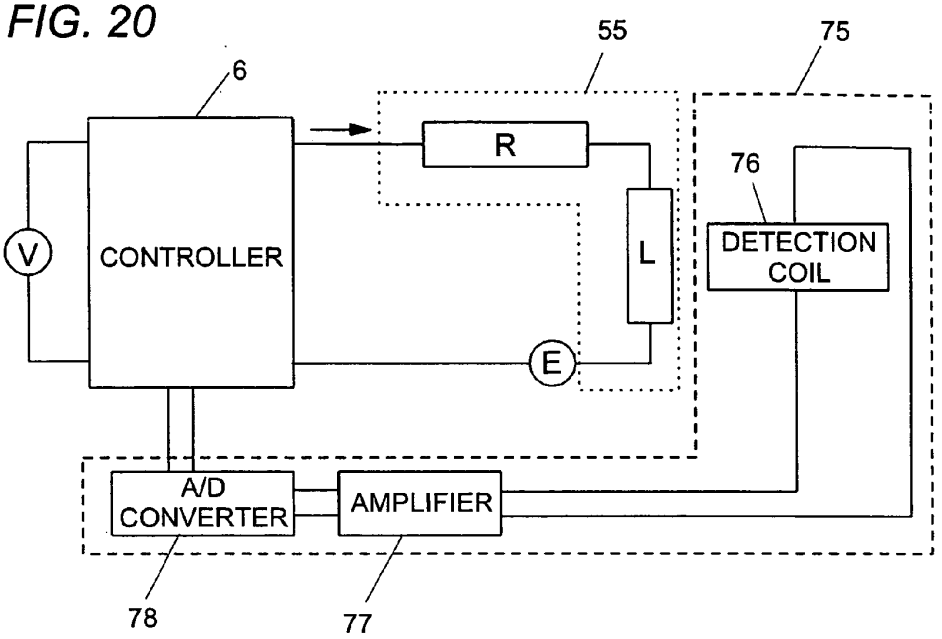

FIG. 21

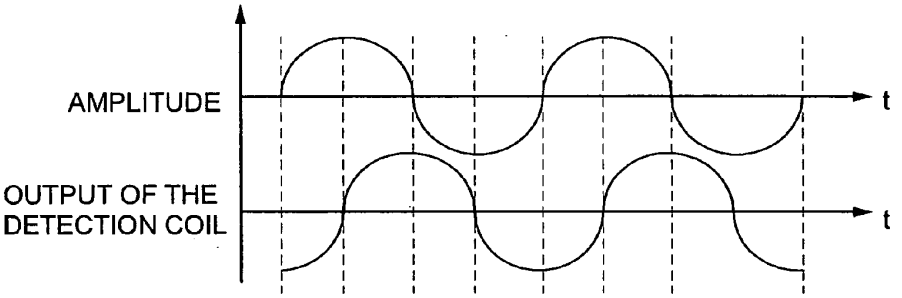

FIG. 22A

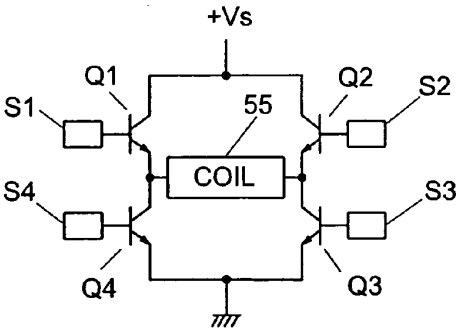

FIG. 22B

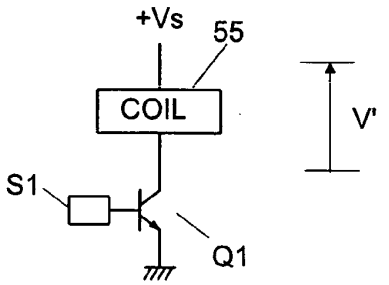

FIG. 22C

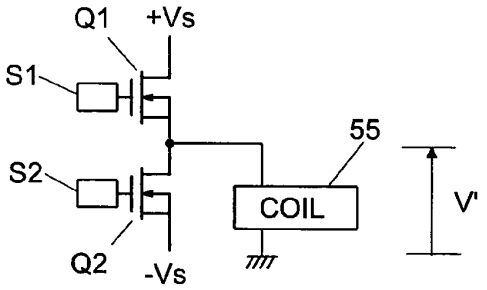

FIG. 22D

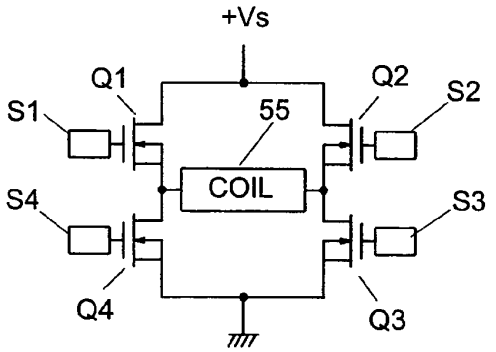

FIG. 22E

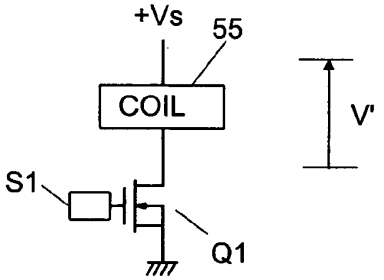

FIG. 23A

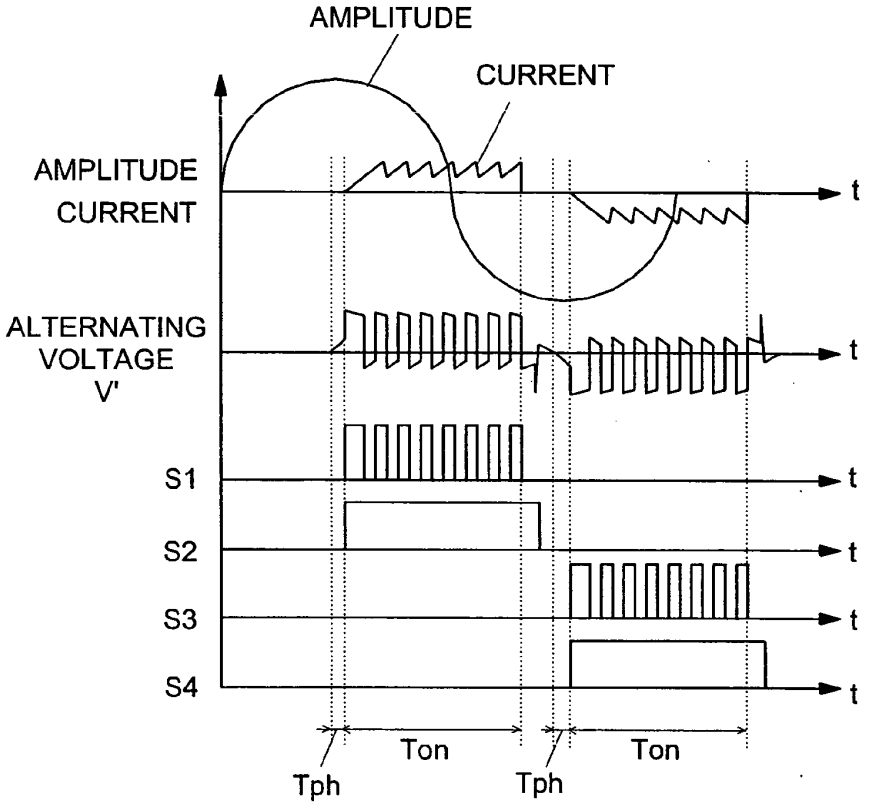

FIG. 23B

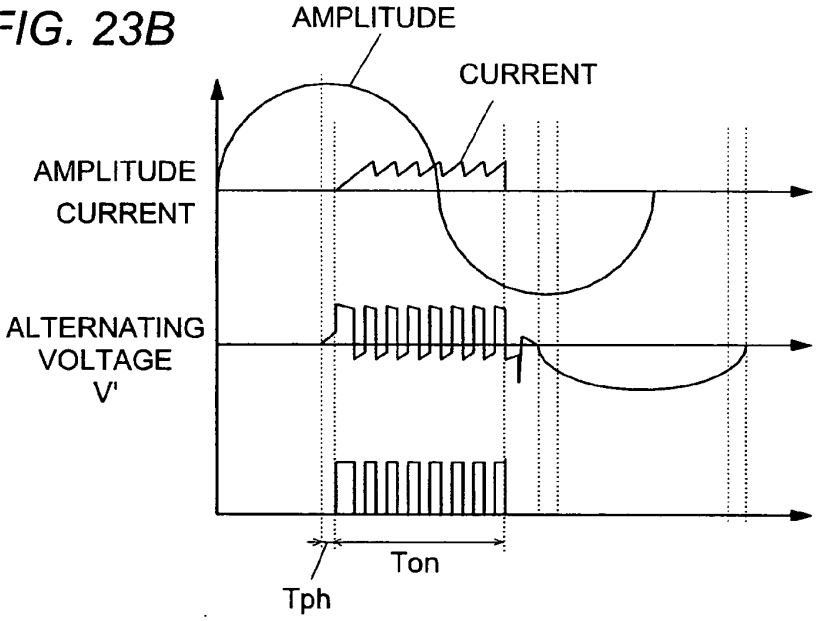

FIG. 24

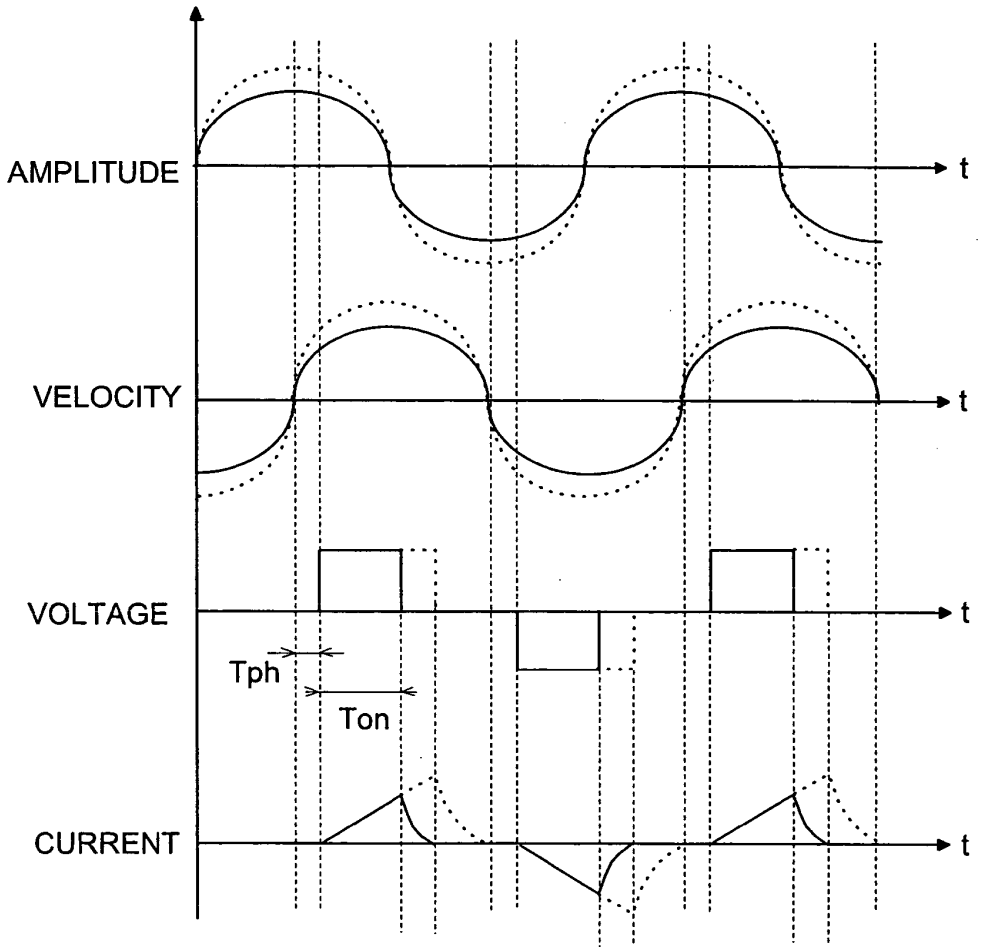

DRIVING UNIT

TECHNICAL FIELD

[0001] The present invention relates to a driving unit and a method for driving a resonance system comprising an elastic body and a moving element supported by the elastic body.

BACKGROUND ART

[0002] Japanese Patent Publication No. 3382061 discloses a driving unit for driving a resonance system comprising an elastic body and a moving element supported by the elastic body. The driving unit is used in an electric shaver as a linear actuator which reciprocates an inner cutter.

[0003] The driving unit is energy efficient because the moving element reciprocates as the resonance system conserves kinetic energy of the moving element and elastic energy of the elastic body and converts them to each other alternately. In actuality, since the energy is consumed by a load and so on, the driving unit has to give consumed energy to the moving element in order to keep the reciprocating motion.

[0004] So, in this driving unit, as shown in **FIG. 24**, a controller of the driving unit gives an alternating voltage of a rectangular wave to an electromagnet every half-cycle, and reciprocates the moving element with a constant amplitude by controlling an voltage application period (Ton) and a phase (Tph) of the alternating voltage.

[0005] Explaining in more detail, when the rectangular voltage is applied to the electromagnet, a current in the form of a triangular wave, as shown in **FIG. 24**, flows through a coil of the electromagnet. Vibration force which moves the moving element will increase or decrease in response to the amount of the current flowing through the coil. For example, when the amount of the current flowing through the coil increases as shown by a dashed line in **FIG. 24**, the vibration force will increase, and, on the other hand, when the amount of the current flowing through the coil decreases, the vibration force will decrease. So, in this driving unit, the controller detects a motion of the moving element every half-cycle, and if the width of the moving element is larger than a target width, the controller decreases the voltage application period, and if the width of the moving element is shorter than the target width, the controller increases the voltage application period. Furthermore, the controller applies the voltage to the coil when the moving element goes a predetermined phase (Tph) from a top dead center or a bottom dead center so as to apply the voltage at the right time in keeping with the moving direction of the moving element.

[0006] As mentioned above, the conventional driving unit controls the moving unit by varying the voltage application period (Ton) and the phase (Tph) of the voltage in order to make the moving element do an intended motion, such as a reciprocating motion with constant amplitude. However, although the conventional control method can make the moving element do an intended motion, it does not take into consideration an influence of a waveform of the current flowing through the coil on energy efficiency. Therefore, in the conventional driving unit, a current in the form of the triangular wave having many harmonic components flows through the coil, as mentioned above, so that a momentary current becomes very high at the conclusion of the energization. As a result, an energy loss due to resistances of the coil, control circuit, etc. increases, by which heating values of electronic components and coil increase, and total energy efficiency decreases.

DISCLOSURE OF THE INVENTION

[0007] In view of the above problem, the object of the present invention is to provide a driving unit and a method for driving a resonance system which can improve energy efficiency.

[0008] The driving unit in accordance with the present invention comprises a moving element, an elastic body configured to support the moving element, a permanent magnet fixed on said moving element, an electromagnet disposed to be opposed to said permanent magnet, and a controller. The moving element and the elastic body constitute a resonance system in which kinetic energy of the moving element and elastic energy of the elastic body are conserved and converted to each other. The electromagnet includes a magnetic material and a coil wounded around the magnetic material. The controller magnetizes the magnetic material by feeding a current through the coil, and gives a vibration force to the moving element by magnetic force acting between the magnetic material and the permanent magnet. The feature of the present invention resides in that the controller determines a current waveform necessary for an intended motion of the moving element, and applies a voltage to the coil intermittently so that a current in the form of the current waveform flows through said coil. Therefore, an electric current in the form of a current waveform desirable for an intended motion of the moving element can flow through the coil, so that an energy loss due to an unnecessary current can be reduced and the energy efficiency can be improved.

[0009] Preferably, the controller determines a shape and a phase of the current waveform necessary for the intended motion of the moving element. Or, it is also preferable that the controller determines a shape and an application time of the current waveform. The driving unit can be driven more efficiently by controlling the phase and the application time of the current waveform in addition to controlling the shape of it.

[0010] A desirable current waveform for the intended motion of the moving element varies depending on various factors, such as a state of the resonance system and an external load. Therefore, it is preferable that the driving unit further comprises a sensor configured to detect a behavior of the moving element, and the controller determines the current waveform in response to the behavior of the moving element detected by the sensor. In this case, an optimal current waveform can be determined in response to the behavior of the moving element.

[0011] In a driving unit for driving such resonance system, it is most energy efficient when the moving element reciprocates under a resonant condition where the reciprocating motion of the moving element is synchronous with a natural frequency determined by a mass of the moving element and an elasticity of the elastic body. Therefore, it is preferable that the controller determines the current waveform necessary for the moving element to reciprocate in a resonant condition.

[0012] In order to form an intended current waveform precisely, it is preferable that the controller predicts induced electromotive force generated with the reciprocating motion of the moving element, and forms the current waveform using the induced electromotive force. And, it is also preferable that the controller predicts inductance or a change of the inductance which varies by a position of the moving element or a change of the position of the moving element **1**, and forms the current waveform while taking into consideration the inductance or the change of the inductance. Furthermore, it is also preferable that the controller changes the current waveform in response to a change of a power supply voltage.

[0013] In order to apply the voltage to the coil intermittently, it is preferable that the controller controls ON-time and OFF-time of the voltage to be applied to the coil. Or, it is also preferable that the controller controls a ratio of ON-time to OFF-time of the voltage to be applied to the coil. Or, the controller may control a sum of ON-time and OFF-time of the voltage to be applied to the coil. Or, the controller may control a sum of ON-time and OFF-time of the voltage to be applied to the coil and a ratio of the ON-time to the OFF-time of the voltage. In these cases, the controller can form various shapes of the current waveforms, so that an intended current waveform can flow through the coil.

BRIEF DESCRIPTION OF THE DRAWINGS

[0014] **FIGS. 1A and 1B** are views showing a construction of a driving unit in accordance with an embodiment of the present invention.

[0015] **FIG. 2** is a block diagram of a controller of the driving unit.

[0016] **FIGS. 3A** to **3**C are views showing an example of a sensor for detecting a behavior of a moving element of the driving unit.

[0017] **FIG. 4** is a view showing a circuit configuration of the sensor of **FIGS. 3A** to **3**C.

[0018] **FIG. 5** is a time chart showing an output of the circuit of **FIG. 4**.

[0019] **FIG. 6** is a view showing an example of a current waveform determined by a current waveform decider.

[0020] **FIGS. 7A** to **7**E are views showing other examples of the current waveform.

[0021] **FIG. 8** is a view showing fundamental waveforms.

[0022] **FIG. 9** is a view showing one example of a circuit configuration of an alternating voltage output part.

[0023] **FIG. 10** is a time chart of the control signals.

[0024] **FIGS. 11A and 11B** are views showing examples of the control signal.

[0025] **FIG. 12** is a view showing an alternating voltage.

[0026] **FIGS. 13A** to **13**C are views showing current waveforms.

[0027] **FIGS. 14A** to **14**C are views showing current waveforms.

[0028] **FIG. 15** is a view showing a configuration of the controller and the coil.

[0029] **FIG. 16** is a view showing induced electromotive force.

[0030] **FIG. 17** is a view showing a relation between a current and a voltage.

[0031] **FIG. 18** is a view showing a change of inductance of the coil.

[0032] **FIG. 19** is a view showing a result of an energy comparison.

[0033] **FIG. 20** is a view for explaining a sensor.

[0034] **FIG. 21** is a view showing an output of the sensor of **FIG. 20**.

[0035] **FIGS. 22A** to **22**E are views showing other examples of the circuit configuration of the alternating voltage output part.

[0036] **FIGS. 23A** to **23**B are time charts of the control signals.

[0037] **FIG. 24** is a time chart showing a current waveform of the prior art.

BEST MODE FOR CARRYING OUT THE INVENTION

[0038] Hereinafter, the present invention will be described in more detail with reference to the accompanying drawings.

[0039] **FIG. 1A** shows a driving unit for driving a resonance system in accordance with an embodiment of the present invention. The driving unit is used in an electric shaver as a linear actuator for reciprocating an inner cutter **100** fixed on a moving element **1**. As shown in **FIG. 1A**, the driving unit comprises a moving element **1** both sides of which are supported by coil springs **2** as elastic bodies, a permanent magnet **3** fixed on the moving element **1**, an electromagnet **5** fixed on a stationary element **4** opposite to the permanent magnet **3**, and a controller **6** which drives the moving element **1** by energizing the electromagnet **5**. One end of each coil spring **2** is connected to the moving element **1**, and the other end of it is fixed on a wall of a case. The moving element **1** can reciprocate in a horizontal direction, and the coil springs **2** give the moving element **1** force which makes the moving element **1** return to the center of a moving range. The electromagnet **5** comprises three magnetic materials **50** to **52** spaced uniformly, and coils **55** wound between the magnetic materials. When the coils **55** are energized, the magnetic material **51** located at the center and the magnetic materials **50**, **52** located at both ends are magnetized into opposite poles. The permanent magnet **3** has a north pole and a south pole along the moving direction of the moving element **1**, and the distance between the centers of the north pole and the south pole is nearly equal to the distance between the centers of the adjacent magnetic materials. The controller **6** gives an alternating voltage to the coils **55**. When a positive voltage is given to the coils **55** by the controller **6**, the magnetic material **51** located at the center is magnetized into a north pole and the magnetic materials **50**, **52** located at both ends are magnetized into a south pole, respectively, as shown in **FIG. 1A**, and the moving element **1** is moved to the left in **FIG. 1A** by magnetic forth acting between the magnetic materials **50**, **51** and the permanent

magnet **3**. On the other hand, when a negative voltage is given to the coils **55**, the magnetic material **51** located at the center is magnetized into a south pole and the magnetic materials **50**, **52** located at both ends are magnetized into a north pole, respectively, as shown in **FIG. 1B**, and the moving element **1** is moved to the right in **FIG. 1B** by a magnetic forth between the magnetic materials **51**, **52** and the permanent magnet **3**. While the coils **55** are not energized, the moving element **1** is located at the center of the moving range by the force of the coil springs **2**. The resonance system comprising the elastic body (the coil spring **2**) and the moving element **1** supported by the elastic body like this is energy efficient because the moving element **1** reciprocates while conserving kinetic energy of the moving element and elastic energy of the elastic body and converting them to each other alternately.

[**0040**] **FIG. 2** is a block diagram of the controller **6**. The controller **6** is electrically connected to a sensor **7** for detecting a behavior of the moving element **1**, and comprises a current waveform decider **60** which determines a current waveform necessary for an intended motion of the moving element **1** in response to the behavior of the moving element **1** detected by the sensor **7**, and an alternating voltage output part **61** which applies a voltage to the coil **55** intermittently based on a control signal from the current waveform decider **60** so that a current in the form of the current waveform determined by the current waveform decider **60** will flow through the coil **55**.

[**0041**] The sensor **7** detects a behavior of the moving element **1**, such as amplitude, velocity, acceleration, vibration force, frequency, and a moving direction, and gives the detected information to the current waveform decider **60**.

[**0042**] **FIGS. 3A** to **3**C show one example of the sensor **7**. This sensor **7** is a photo sensor **70** comprising a light emitting element **71** and a light receiving element **72**. In this case, the moving element **1** has a slit **10** having a width W, and the light emitting element **71** and the light receiving element **72** are disposed on both sides of the slit **10**. As shown in **FIG. 4**, the light emitting element **71** is constituted by a LED**1**, and the light receiving element **72** is constituted by a series circuit of a resistance R**1** and a phototransistor PT**1**, a series circuit of resistances R**2** and R**3**, and a comparator (COMP**1**) whose inverting input terminal is connected to a connection point between the resistance R**1** and a collector of the phototransistor PT**1** as well as whose noninverting input terminal is connected to a connection point between the resistance R**2** and the resistance R**3**. As shown in **FIG. 3A**, while the light emitted from the light emitting element **71** is intercepted by the moving element **1**, the voltage (Va) of the collector of the phototransistor PT**1** becomes high, as shown in **FIG. 5**, and then the output (Vb) of the comparator (COMP**1**) becomes low. And as shown in **FIG. 3B**, when the moving element **1** begins to move from one side toward the center position and gets to the center position (amplitude=0) (see at time t**1**, t**3** in **FIG. 5**), the light receiving element **72** begins to receive the light emitted from the light emitting element **71** through the slit **10**. While the light receiving element **72** receives the light through the slit **10** (see a period (Tv) in **FIG. 5**), the voltage (Va) of the collector is held at low level, so the output (Vb) of the comparator (COMP**1**) is held at high level. When the slit **10** passed through the photo sensor as shown in **FIG. 3C**, the light emitted from the light emitting element **71** is intercepted by the moving element **1**, and the voltage (Va) of the collector becomes high, and the output (Vb) of the comparator (COMP**1**) becomes low (see a period (Td) in **FIG. 5**). On the other hand, when the moving element **1** begins to move from the other side toward the center position, the light receiving element **72** begins to receive the light emitted from the light emitting element **71** through the slit **10** before the moving element **1** reaches the center position (at time t**0**, t**2**, and t**4** in **FIG. 5**), and the light receiving element **72** keeps receiving the light until the slit **10** passes the photo sensor. While the light receiving element **72** receives the light (a period Tv in **FIG. 5**), the voltage (Va) of the collector is held at low level, and the output (Vb) of the comparator (COMP**1**) is held at high level. When the slit **10** passed through the photo sensor, the light emitted from the light emitting element **71** is intercepted by the moving element **1**, and the voltage (Va) of the collector becomes high, and the output (vibe) of the comparator (COMP**1**) becomes low over a half period (a period Tw/2 in **FIG. 5**). By such an output from the comparator (COMP**1**), the behavior of the moving element **1**, such as a position, a frequency (1/Tw), a velocity of a specific segment (W/Tv), and a moving direction of the moving element **1**, can be detected (The moving direction can be detected by a comparison of the lengths of the periods Tw/2 and Td).

[**0043**] The current waveform decider **60** calculates an optimal current waveform for an intended motion of the moving element **1** in response to the behavior of the moving element **1** detected by the sensor **7**. For example, the current waveform decider **60** calculates an optimal current waveform for a reciprocating motion of the moving element **1** with constant amplitude under a resonance condition. The driving unit for an electric shaver is required to keep a constant amplitude regardless of any external load, and, in the resonance system like this, it is most energy efficient when the moving element reciprocates under the resonant condition where the reciprocating motion of the moving element is synchronous with a natural frequency determined by a mass of the moving element and an elasticity of the elastic body. Therefore, it is preferable that the current waveform decider **60** calculates an optimal current waveform for the reciprocating motion of the moving element **1** with constant amplitude under a resonance condition. It should be noted that, because the vibration force of the moving element **1** is decided by magnetic force generated in response to an instantaneous value of the current waveform, determining the current waveform necessary for an intended motion of the moving element **1** means determining a vibration force necessary for an intended motion of the moving element **1**. Put another way, the current waveform decider **60** calculates an optimal vibration force necessary for an intended motion of the moving element **1** to drive the moving element **1** efficiently.

[**0044**] The current waveform that the current waveform decider **6** determines includes a phase and an application time of the current waveform as well as a shape of the current waveform. That is, the current waveform decider **60** calculates the phase and the application time of the current waveform as well as the shape of the current waveform. In a control method for the resonance system, the moving element **1** can be driven efficiently if the coil is energized after a lapse of a certain period (Tph) from an inversion of the moving direction of the moving element **1**. Furthermore, it is important for the control method for a resonance system

to give a current to the coil within a half-period of the moving element so that the vibration force will not become brake force. Therefore, the current waveform decider **60** decides the phase of the current waveform, that is, the time period (Tph) in **FIG. 6**, and an application time of the current waveform, that is, the time period (Ton) in **FIG. 6**, as well as a shape of the current waveform, in response to the behavior of the moving element **1** detected by the sensor **7** in order to make the moving element **1** do an intended motion efficiently. The moving element **1** can be driven more efficiently by controlling the phase and the application time of the current waveform in addition to controlling the shape of the current waveform.

[**0045**] **FIG. 6** shows one example of the current waveform determined by the current waveform decider **60**. The current waveform of **FIG. 6** is a sawtooth current waveform whose peak is kept low. The current waveform is applied to the coil during a certain application time (Ton) after a lapse of a certain period (Tph) from time point when the moving element **1** passed the maximum amplitude point (Pmax). A value of the current and the length of time periods (Tph), (Ton) are controlled appropriately in response to the behavior of the moving element **1**.

[**0046**] Of course, the shape of the current waveform is not limited to the sawtooth current waveform shown in **FIG. 6**. Since an optimal current waveform for giving vibration force to a resonance system differs depending on a structure of the resonance system or a load, the current waveform decider **60** determines the current waveform according to the structure of the resonance system, the load, the behavior of the moving element **1** and so on. Other examples of the current waveform are shown in **FIGS. 7A** to **7**E. The current waveform shown in **FIG. 7A** is in the form of an isosceles triangle, the current waveform shown in **FIG. 7B** is in the form of a half cycle, the current waveform shown in **FIG. 7C** is in the form of a trapezoid, the current waveform shown in **FIG. 7D** is in the form of a half cycle having ripples, and the current waveform shown in **FIG. 7E** is in the form of a triangle having ripples. These waveforms can be formed by a combination of the fundamentals shown in **FIG. 8**.

[**0047**] The alternating voltage output part **61** is controlled by control signals sent from the current waveform decider **60**, and it applies a voltage to the coil **55** intermittently so that a current in the form of the current waveform determined by the current waveform decider **60** will flow through the coil **55**.

[**0048**] **FIG. 9** shows one example of a circuit configuration of the alternating voltage output part **61**. The alternating voltage output part **61** is constituted by a series circuit of switching elements Q**1** and Q**2** each of which is a NPN transistor connected between a control voltage (+Vs) and a control voltage (−Vs). The coil **55** is connected to a connection point between the switching elements Q**1** and Q**2** and to the ground. The switching elements Q**1** and Q**2** are controlled by the control signals S**1**, S**2** which are inputted into each of the base terminals of the switching elements Q**1**, Q**2** by the current waveform decider **60**.

[**0049**] **FIG. 10** shows a time chart of the control signals S**1**, S**2** for forming the sawtooth current waveform shown in **FIG. 6**. As shown in **FIG. 10**, the control signals S**1**, S**2** are inputted into the switching elements Q**1** and Q**2** intermittently, so that the voltage is applied to the coil **55** intermittently during the application time (Ton). As a result, the intended current waveform, namely the sawtooth current waveform, can flow through the coil **55**. The control signal may be a shape shown in **FIG. 11A**, or may be a complex waveshape of the shapes of **FIG. 11A**, as shown in **FIG. 11B**.

[**0050**] Hereinafter, the control method of the alternating voltage will be described in detail below. As shown in **FIG. 12**, the current waveform decider **60** controls ON-time (T**1**) and OFF-time (T**2**) of the alternating voltage to be applied to the coil **55**, respectively, by the control signals S**1**, S**2**. **FIGS. 13A** to **131**C show a current waveform at the case where the ON-time (T**1**) and the OFF-time (T**2**) are changed respectively within a certain period (T**3**). As shown in **FIGS. 13A** to **13**C, the current increases during the ON-time, and decreases during the OFF-time. Therefore, the momentary current of the coil **55** can be controlled by changing the lengths of the ON-time (T**1**) and the OFF-time (T**2**), so that many kinds of the current waveforms can be formed as shown in **FIGS. 14A** to **14**C.

[**0051**] In order to form the intended current waveform precisely, it is preferable that the controller **6** predicts induced electromotive force generated with the reciprocating motion of the moving element **1**, and forms the current waveform using the induced electromotive force. If the induced electromotive force is not taken into consideration, the current flowing through the coil is described by the following equation:

$$i = \frac{V_1}{R}(1 - e^{-\frac{R}{L}}) \cdot t \tag{1}$$

[**0052**] wherein "i" represents the current, "V_1" represents alternating voltage, "R" represents a resistive component of a coil, "L" represents inductance, and "t" represents time.

[**0053**] However, in actuality, magnetic flux passing through the coil **55** varies with the movement of the permanent magnet **3** which reciprocates with the moving element **1**, so that induced electromotive force E will be generated, as shown in **FIG. 15** (in **FIG. 15**, the coil **55** is represented by a series circuit of the inductance L and the resistance R.). As the velocity of the moving element **1** increases, the induced electromotive force E increases, and the induced electromotive force peaks when the amplitude of the moving element **1** is zero, namely, the velocity of the moving element **1** reaches a maximum, as shown in **FIG. 16**. Therefore, when the induced electromotive force is taken into consideration, the voltage V_2 across the coil **55** becomes $V_2=V_1+E$ (wherein "V_1" is a voltage outputted from the controller **6**), as shown in **FIG. 17**, and the current flowing through the coil is described by the following equation:

$$i = \frac{(V_1 + E)}{R}(1 - e^{-\frac{R}{L}}) \cdot t \tag{2}$$

[**0054**] As is clear from **FIG. 17** and the above equation (2), when the induced electromotive force is taken into consideration, the current is decreased. Therefore, when the controller **6** predicts the induced electromotive force in

response to the behavior of the moving element **1** and forms the current waveform using the induced electromotive force, the intended current waveform can be formed precisely.

[**0055**] Furthermore, it is also preferable that the controller **6** predicts inductance or a change of the inductance of the coil **55** which varies in response to the position of the moving element **1**, and forms the current waveform taking into consideration the inductance or the change of the inductance. **FIG. 18** shows a current waveform flowing through the coil **55** and the inductance of the inductance of the coil **55** in the case where the moving element **1** moves. As shown in **FIG. 18**, the inductance of the coil **55** varies in response to the position of the moving element **1**. Therefore, when the controller **6** predicts the inductance or the change of the inductance of the coil to form the current waveform, the controller **6** can form the intended current waveform more precisely.

[**0056**] Also, as is clear from the above equation (2), the current flowing through the coil **55** will increase or decrease in response to the voltage across the coil **55**. Since the driving unit of this embodiment is used in the electric shaver, a battery may be used as a power source. Therefore, in order to form the current waveform precisely, it is preferable that the controller **6** changes the current waveform in response to a power supply voltage (the voltage V in **FIG. 15**). For example, when the power supply voltage is low, the controller **6** increases the current flowing through the coil **55**, and when the power supply voltage is high, the controller **6** decreases the current. By this, the controller **6** can make the moving element **1** do an intended motion, for example a reciprocating motion with a constant amplitude, without relying on the power supply voltage.

[**0057**] As mentioned above, the driving unit of this embodiment can give the resonance system optimal vibration force which is neither too much nor too little for the intended motion of the resonance system by detecting the behavior of the moving element **1** by the sensor **7**, and determining optimal current waveform for driving the resonance system by the current waveform decider **60** in response to the detected behavior, and outputting the momentary current necessary for the resonance system by applying the voltage to the coil intermittently. As a result, electric loss can be decreased and energy efficiency can be improved, so that the driving unit can be driven with high degrees of efficiency.

[**0058**] **FIG. 19** shows a result of an energy comparison of a case where the sawtooth current waveform shown in **FIG. 6** flowed through the coil **55** and a case where the prior current waveform, namely the current in the form of the triangular wave, flowed through the coil **55**. Although electricity consumption to keep amplitude of 2 mm was about 2.0 W in the case of the current in the form of the triangular wave, the electricity consumption was about 1.6 W in the case of the sawtooth current waveform. That is, the sawtooth current waveform can improve the energy efficiency about 20% against the triangular wave.

[**0059**] Although the sensor **7** of this embodiment was constituted by a photo sensor **70**, the sensor **7** is not limited to this. **FIG. 20** shows another example of the sensor **7**. In **FIG. 20**, the coil **55** is represented by a series circuit of inductance L and resistance R. The sensor **75** comprises a detection coil **76** disposed near the center of the coil **55**, an amplifier **77** for amplifying the output of the detection coil **76**, and an A/D converter **78** which change the output of the amplifier **77** from analog to digital form. The magnetic flux of the permanent magnet **3** passing through the detection coil **76** varies in response to the reciprocating motion of moving element **1**, and induced electromotive force responsive to the reciprocating motion of the moving element **1** will be generated across the detection coil **76**. **FIG. 21** shows the output of the detection coil **76**. The output of the detection coil **76** is a sine wave which lags 90 degrees behind the amplitude of the moving element **1**. Because the change of the magnetic flux passing through the detection coil **76** is proportional to the velocity of the moving element **1**, the output of the detection coil **76** correlates with the velocity of the moving element **1**. This output is transmitted to the controller **6** through the amplifier **77** and the A/D converter **78**, and the controller **6** detects the behavior of the moving element **1**, such as the position, the frequency, and the acceleration. A coil for driving the moving element **1**, such as the coil **55**, may be used as the detection coil **76**.

[**0060**] In addition, the alternating voltage output part **61** may have a circuit configuration which is shown in **FIGS. 22A** to **22**E. The alternating voltage output part **61** of **FIG. 22A** is constituted by a series circuit of switching elements Q**1** and Q**4** each of which is a NPN transistor connected between the control voltage (+Vs) and the ground, and a series circuit of switching elements Q**2** and Q**3** each of which is a NPN transistor connected between the control voltage (+Vs) and the ground. The coil **55** is connected between a connection point of the switching elements Q**1** and Q**4** and a connection point of the switching elements Q**2** and Q**3**. The switching elements Q**1** to Q**4** are controlled by control signals S**1** to S**4**, respectively, which are inputted into the base terminals by the current waveform decider **60**.

[**0061**] The alternating voltage output part **61** of **FIG. 22B** is constituted by a series circuit of the coil **55** and switching element Q**1** of NPN transistor, and is connected between the control voltage (+Vs) and the ground. The switching element Q**1** is controlled by control signal S**1** inputted into the base terminal by the current waveform decider **60**. The alternating voltage output parts **61** shown in **FIGS. 22C** to **22**E use FETs as the switching elements Q**1** to Q**4** of the alternating voltage output part of **FIGS. 9 and 22**A to **22**B.

[**0062**] **FIG. 23A** shows a time chart of the control signals S**1** to S**4** for forming the sawtooth current waveform of **FIG. 6** with the use of the alternating voltage output part **61** of **FIG. 22A** or **22**D. **FIG. 23B** shows a time chart of the control signal S**1** for forming the sawtooth current waveform of **FIG. 6** with the use of the alternating voltage output part **61** of **FIG. 22B** or **22**E.

[**0063**] Although each of the ON-time and the OFF-time of the voltage is controlled in order to form the intended current waveform in this embodiment, in the actual real time control, it can be difficult to perform complicated control at every half-cycle or one cycle of the moving element **1** due to a constraint of the control device, such as CPU speed, ROM capacity, etc. So, the controller may control a ratio of the ON-time (T**1**) to the OFF-time (T**2**), namely a duty ratio (T**1**/T**2**), while keeping the sum of the ON-time and the OFF-time (T**3**=T**1**+T**2**) constant. That is, the controller may use a so-called PWM control method. In this case, the controller **6** can form an intended current waveform without using a complex control system.

[0064] Or, the controller **6** may use a so-called PFM control method. That is, the controller may control the sum time (T**3**) while keeping the duty ratio (T**1**/T**2**) constant.

[0065] Or, the controller **6** may control both the sum time (T**3**) of the ON-time and the OFF-time and the duty ratio (T**1**/T**2**). Or, the controller **6** may use both the PWM control method and the PFM control method as the situation demands.

[0066] As mentioned above, as many apparently widely different embodiments of this invention may be made without departing from the spirit and scope thereof, it is to be understood that the invention is not limited to the specific embodiments thereof except as defined in the appended claims.

1. A driving unit comprising:

a moving element;

an elastic body configured to support said moving element, said elastic body and said moving element constituting a resonance system in which kinetic energy of said moving element and elastic energy of said elastic body are conserved and converted to each other;

a permanent magnet fixed on said moving element;

an electromagnet disposed opposite to said permanent magnet, said electromagnet including a magnetic material and a coil wound around said magnetic material;

a controller, said controller magnetizing said magnetic material by feeding a current through said coil, and giving a vibration force to said moving element by magnetic force acting between said magnetic material and said permanent magnet;

wherein

said controller determining a current waveform necessary for an intended motion of said moving element, and applying a voltage to said coil intermittently so that a current in a form of said current waveform flows through said coil.

2. The driving unit as set forth in claim 1, wherein

said controller determines a shape and a phase of the current waveform necessary for the intended motion of said moving element.

3. The driving unit as set forth in claim 1, wherein

said controller determines a shape and an application time of the current waveform necessary for the intended motion of said moving element.

4. The driving unit as set forth in claim 1, wherein

said controller determines a shape, a phase and an application time of the current waveform necessary for the intended motion of said moving element.

5. The driving unit as set forth in claim 1, further comprising

a sensor configured to detect a behavior of said moving element,

said controller determining the current waveform in response to the behavior of said moving element detected by said sensor.

6. The driving unit as set forth in claim 1, wherein

said controller determines the current waveform necessary for said moving element to reciprocate in a resonant condition.

7. The driving unit as set forth in claim 1, wherein

said controller predicts induced electromotive force generated with a reciprocating motion of said moving element, and forms the current waveform using the induced electromotive force.

8. The driving unit as set forth in claim 1, wherein

said controller predicts inductance or a change of the inductance of the coil, and forms the current waveform using the inductance or the change of the inductance.

9. The driving unit as set forth in claim 1, wherein

said controller changes the current waveform in response to a power supply voltage.

10. The driving unit as set forth in claim 1, wherein

said controller controls ON-time and OFF-time of the voltage to be applied to said coil in order to apply the voltage to said coil intermittently.

11. The driving unit as set forth in claim 1, wherein

said controller controls a ratio of ON-time to OFF-time of the voltage to be applied to said coil in order to apply the voltage to said coil intermittently.

12. The driving unit as set forth in claim 1, wherein

said controller controls a sum of ON-time and OFF-time of the voltage to be applied to said coil in order to apply the voltage to said coil intermittently.

13. The driving unit as set forth in claim 1, wherein

said controller controls a sum of ON-time and OFF-time of the voltage applied to said coil and a ratio of the ON-time to the OFF-time of the voltage in order to apply the voltage to said coil intermittently.

14. A method for driving a driving unit,

said driving unit comprising:

a moving element;

an elastic body configured to support said moving element, said elastic body and said moving element constituting a resonance system in which kinetic energy of said moving element and elastic energy of said elastic body are conserved and converted to each other;

a permanent magnet fixed on said moving element;

an electromagnet disposed to be opposed to said permanent magnet, said electromagnet including a magnetic material and a coil wounded around said magnetic material; and

a controller, said controller magnetizing said magnetic material by feeding a current through said coil and giving a to said moving element by magnetic force acting between said magnetic material and said permanent magnet,

said method comprising the steps of:

(a) determining a current waveform necessary for an intended motion of said moving element;

(b) applying a voltage to said coil intermittently so that a current in a form of said current waveform flows through said coil.

* * * * *