UNITED STATES PATENT AND TRADEMARK OFFICE

BEFORE THE PATENT TRIAL AND APPEAL BOARD

SAMSUNG ELECTRONICS CO., LTD. and
SAMSUNG ELECTRONICS AMERICA, INC.

Petitioners

v.

RESONANT SYSTEMS, INC.,

Patent Owner

Case IPR2023-00993

Patent 9,941,830

Petition for *Inter Partes Review* of U.S. Patent No. 9,941,830

TABLE OF CONTENTS

PETITIONERS' EXHIBIT LIST v
I. INTRODUCTION 1
II. GROUNDS FOR STANDING (37 C.F.R. § 42.104(a)) 1
III. STATEMENT OF PRECISE RELIEF REQUESTED 1
IV. OVERVIEW OF THE '830 PATENT 4
- **A.** *Specification* 4
- **B.** *Prosecution History* 5

V. LEVEL OF ORDINARY SKILL IN THE ART 6
VI. CLAIM CONSTRUCTION 7
- **A.** Means-Plus-Function ("MPF") 7
  1. "moveable component" 7
  2. "driving component" 7
  3. "control component" 7
- **B.** Claims 4–6 9

VII. DETAILED EXPLANATION OF GROUNDS 9
- **A.** Ground 1A: Fukumoto Renders Obvious Claims 1–3, 7–9, 15, 17, 20 9
  1. Fukumoto 9
  2. Claim 1 12
     - a. 1[pre] 12
     - b. 1[a] 13
     - c. 1[b] 14
     - d. 1[c] 15
     - e. 1[d] 16
     - f. 1[e] 17
     - g. 1[f] 18
  3. Claim 2 23
  4. Claim 3 24
  5. Claim 7 27
  6. Claim 8 28

META-1053, p. 2
Meta v. Resonant
IPR2025-00823

7. Claim 9 31
8. Claims 15 and 20 33
9. Claim 17 34
B. Ground 1B: Fukumoto and Grant Render Obvious Claims 1–3, 7–9, 15, 17, and 20 35
1. 1[pre]–[e] 35
2. 1[f] 36
3. Claims 2–3, 7–9, 15, and 20 37
4. Claim 17 38
C. Ground 1C: Fukumoto and Barton Renders Obvious Claims 1–3, 7–9, 15, 17, and 20 39
1. 1[pre]–[e] 39
2. 1[f] 39
3. Claims 2–3, 7–9, 15, and 20 44
4. Claim 17 45
D. Grounds 1D–F: Each of Fukumoto, Fukumoto-Grant, or Fukumoto-Barton and Ueda Renders Obvious Claims 3–6. 45
1. Combination of Fukumoto and Ueda 46
2. Claim 3 46
3. Claim 4 51
4. Claim 5 53
5. Claim 6 55
E. Grounds 1G–I: Each of Fukumoto, Fukumoto-Grant, or Fukumoto-Barton and Erixon Renders Obvious Claims 7 and 8 56
1. Claim 7 56
2. Claim 8 60
F. Grounds 1J–L: Each of Fukumoto, Fukumoto-Grant, or Fukumoto-Barton and Fuller Renders Obvious Claim 8 64
G. Grounds 1M–O: Each of Fukumoto, Fukumoto-Grant, or Fukumoto-Barton and Dong-Ogusu Renders Obvious Claims 14 and 19 66
1. Dong's Prior Art Status 67

META-1053, p. 3
Meta v. Resonant
IPR2025-00823

2. Claims 14 and 19 67

H. Grounds 1P–R: Each of Fukumoto, Fukumoto-Grant, or Fukumoto-Barton and Saiki Renders Obvious Claims 15 and 20 70

I. Grounds 1S–U: Each of Fukumoto, Fukumoto-Grant, or Fukumoto-Barton and Saiki-Masahiko Renders Obvious Claim 16 72

1. Masahiko's Prior Art Status 72

2. Claim 16 73

J. Grounds 2A–C: Ogusu and Each of Fukumoto, Fukumoto-Grant, and Fukumoto-Barton Renders Obvious Claims 1, 2, 7, 11, 15, 17, and 20 75

1. Ogusu 75

2. Combination of Ogusu with Fukumoto 77

3. Claim 1 77
   a. 1[pre] 77
   b. 1[a] 78
   c. 1[b] 78
   d. 1[c] 79
   e. 1[d] 80
   f. 1[e] 81
   g. 1[f] 82

4. Claim 2 84

5. Claim 7 87

6. Claim 11 87

7. Claims 15, 20 88

8. Claim 17 90

K. Grounds 2D–F: Each of Ogusu-Fukumoto, Ogusu-Fukumoto-Grant, and Ogusu-Fukumoto-Barton and Ueda Renders Obvious Claims 3–6 92

L. Grounds 2G–I: Ogusu-Fukumoto, Ogusu-Fukumoto-Grant, and Ogusu-Fukumoto-Barton and Erixon Renders Obvious Claims 7–8 93

VIII. THE DISCRETIONARY FACTORS FAVOR INSTITUTION 93

A. 35 U.S.C. § 314(a) 93

1. Stay. 94

META-1053, p. 4
Meta v. Resonant
IPR2025-00823

2. Trial Date.....94
3. Diligence/Investment. 94
4. Overlap. 95
5. Other Considerations.....95
IX. MANDATORY NOTICES UNDER 37 C.F.R. § 42.8.....95
A. Real Parties-in-Interest 95
B. Related Matters.....95
C. Lead and Backup Counsel 96
D. Service Information 96
X. FEES 97

META-1053, p. 5
Meta v. Resonant
IPR2025-00823

PETITIONERS' EXHIBIT LIST

Exhibit No.	Description
1001	U.S. Patent 9,941,830 B2 ("'830Pat.")
1002	File History of U.S. Patent 9,941,830 ("'830FH")
1003	Declaration of Andrew Wolfe, Ph.D.
1004	Curriculum Vitae of Andrew Wolfe, Ph.D.
1005	U.S. Patent 7,292,227 B2 ("Fukumoto")
1006	U.S. Patent Application Publication 2006/0284849A1 ("Grant")
1007	U.S. Patent Application Publication 2006/0248183A1 ("Barton")
1008	U.S. Patent Application Publication 2004/0169480A1 ("Ueda")
1009	U.S. Patent Application Publication 2008/0174187A1 ("Erixon")
1010	U.S. Patent Application Publication 2008/0001484A1 ("Fuller")
1011	China Patent Application Publication 101488697A ("Dong")
1012	Certified Declaration of Dong Translation
1013	U.S. Patent 7,006,641 ("Saiki")
1014	U.S. Patent 8,917,486 ("Masahiko")
1015	Japan Patent Application Publication JPH08196053A ("Ogusu")
1016	Certified Declaration of Ogusu Translation
1017	Complaint in *Resonant Systems, Inc. v. Samsung Elecs. Co., Ltd.*, 2:22-cv-00423 (E.D. Tex. October 26, 2022)
1018	Docket Control Order in *Resonant Systems, Inc. v. Samsung Elecs. Co., Ltd.*, 2:22-cv-00423 (E.D. Tex.)
1019	Discovery Order in *Resonant Systems, Inc. v. Samsung Elecs. Co., Ltd.*, 2:22-cv-00423 (E.D. Tex.)
1020	Joint Motion for Entry of Agreed Docket Control Order in *Resonant Systems, Inc. v. Samsung Elecs. Co., Ltd.*, 2:22-cv-00423 (E.D. Tex.)
1021	Joint Motion for Entry of Agreed Discovery Order in *Resonant Systems, Inc. v. Samsung Elecs. Co., Ltd.*, 2:22-cv-00423 (E.D. Tex.)
1022	Amended Infringement Contentions in *Resonant Systems, Inc. v. Samsung Elecs. Co., Ltd.*, 2:22-cv-00423 (E.D. Tex.)
1023	U.S. Patent 9,369,081 B2 ("'081Pat.")
1024	File History of U.S. Patent 9,369,081 ("'081FH")

1025	U.S. Patent 8,860,337B2 ("'337Pat.")
1026	File History of U.S. Patent 8,860,337B2 ("'337FH")
1027	U.S. Patent 8,093,767B2 ("'767Pat.")
1028	File History of U.S. Patent 8,093,767B2 ("'767FH")
1029	File History of Provisional Patent Application 61/179,109
1030	U.S. Patent Application Publication 2011/0144426A1 ("Blenk")
1031	U.S. Patent Application Publication 2011/0248817A1 ("Houston")
1032	U.S. Patent Application Publication 2007/0261185A1 ("Guney")
1033	U.S. Patent No. 3,919,616 ("Allison")
1034	U.S. Patent Application Publication 2009/0295739A1 ("Nagara")
1035	U.S. Patent Application Publication 2008/0153554A1 ("Yoon '554")
1036	U.S. Patent Application Publication 2008/0155415A1 ("Yoon '415")
1037	Exar Databook, *XR-8038: Precision Waveform Generator*, Chapter 1 at 213–214 (1985), ("Exar")
1038	Herbert Friedman, *99 Electronic Projects*, Lafayette Radio Electronics, at 126 (1971), ("Friedman")
1039	Paul Horowitz and Winfield Hill, *The Art of Electronics, 2nd Edition,* Cambridge University Press, at 153–293 (1980), ("Horowitz")
1040	Water G. Jung, *IC Op-Amp Cookbook, Second Edition*, *The Art of Electronics, 2nd Edition,* Howard W. Sams & Co., Inc., at 360–362 (1974), ("Jung")
1041	Jacob Millman, *Micro-Electronics: Digital and Analog Circuits and Systems*, McGraw-Hill Book Company at 651–653, (1979), ("Millman")
1042	STMicroelectronics, *L298: Dual Full-Bridge Driver*, STMicroelectronics at 1–13 (2000), ("STMicroelectronics")
1043	Stipulation of Grounds Pursued in District Court Litigation

LISTING OF CHALLENGED CLAIMS

Reference	Claim Limitation
Claim 1	
1[pre]	A vibration module comprising:
1[a]	a housing;
1[b]	a moveable component;
1[c]	a power supply;
1[d]	user-input features;
1[e]	a driving component that drives the moveable component to oscillate within the housing; and
1[f]	a control component that controls supply of power from the power supply to the driving component to cause the moveable component to oscillate at a frequency and an amplitude specified by one or more stored values.
Claim 2	
2[pre]	The vibration module of claim 1 wherein the control component is one of:
2[a]	an variable oscillator circuit with additional control circuitry; and
2[b.i]	a control component that includes a microprocessor,
2[b.ii]	a control program, stored in an electronic memory within, or separate from, the microprocessor, the control program executed by the microprocessor to control supply of power from the power supply to the driving component to cause the moveable component to oscillate at a frequency and an amplitude specified by the one or more stored values.
Claim 3	
3	The vibration module of claim 1 wherein the control component receives output signals from sensors within the vibration module during operation of the vibration module and adjusts one or more operational control outputs of the control component according to the received output signals from the sensors.
Claim 4	

4	The vibration module of claim 1 wherein the control component adjusts the one or more operational control outputs of the control component according to the received output signals from the sensors in order that subsequent operation of the vibration module produces desired outputs from the one or more sensors corresponding to one or more operational control parameters.
Claim 5	
5[a]	The vibration module of claim 4 wherein the one or more operational control parameters is a strength of vibration produced by the oscillation of the moveable component; and
5[b]	wherein the one or more operational control outputs is a frequency at which the control component drives the moveable component to oscillate, the control component dynamically adjusting the power supplied to the driving component to produce oscillation of the movable component at a resonant frequency for the vibration module.
Claim 6	
6[a]	The vibration module of claim 4 wherein the one or more operational control parameters include both a strength of vibration produced by the oscillation of the moveable component and a current operational mode; and
6[b]	wherein the one or more operational control outputs is a control output that determines a current supplied by the power supply to the driving component and a frequency at which the control component drives the moveable component to oscillate.
Claim 7	
7	The vibration module of claim 1 wherein the driving component comprises one or more electromagnetic coils that generate magnetic fields parallel to the directions in which the moveable component is driven by the driving component.
Claim 8	
8[a]	The vibration module of claim 1 wherein the housing is a tube, capped at both ends by movable-component-repelling components selected from one of mechanical springs and magnets;

8[b]	wherein the movable component is a magnet shaped to slide within the tube; and
8[c]	wherein the driving component is an electromagnetic coil.
Claim 9	
9	The vibration module of claim 1 wherein the housing is a tube, capped at both ends by movable-component- repelling components; and wherein the moveable component includes an electromagnetic-coil driving component and microprocessor.
Claim 11	
11	The vibration module of claim 1 wherein the vibration module further includes two or more driving components, each, when activated, driving the moveable component to oscillate with an amplitude particular to the activated driving component.
Claim 14	
14	The vibration module of claim 1 further including flux paths comprising a paramagnetic material that is shaped and positioned to reduce the reluctance of one or more magnetic circuits within the vibration module.
Claim 15	
15	The vibration module of claim 1 wherein the control component drives simultaneous oscillation of the moveable component at two or more frequencies to generate complex vibration modes.
Claim 16	
16	The vibration module of claim 15 wherein the complex vibration modes include: a primary oscillation frequency modulated by a modulating oscillation frequency; a beat frequency; and an aperiodic oscillation waveform.
Claim 17	
17	The vibration module of claim 1 wherein the control component controls supply of power from the power supply to the driving component to cause the moveable component to oscillate at a frequency and an amplitude that are independently specified by user input received from the user-input features.
Claim 19	
19[pre]	A vibration module comprising:
19[a]	a housing;
19[b]	a moveable component;

19[c]	a power supply;
19[d]	user-input features;
19[e]	a driving component that drives the moveable component to oscillate within the housing;
19[f]	a control component that controls supply of power from the power supply to the driving component to cause the moveable component to oscillate at a frequency and an amplitude specified by one or more stored values; and
19[g]	flux paths comprising a paramagnetic material that is shaped and positioned to reduce the reluctance of one or more magnetic circuits within the vibration module.
Claim 20	
20[pre]	A vibration module comprising:
20[a]	a housing;
20[b]	a moveable component;
20[c]	a power supply;
20[d]	user-input features;
20[e]	a driving component that drives the moveable component to oscillate within the housing; and
20[f]	a control component that controls supply of power from the power supply to the driving component to cause the moveable component to oscillate at a frequency and an amplitude specified by one or more stored values; and
20[g]	wherein the control component drives simultaneous oscillation of the moveable component at two or more frequencies to generate complex vibration modes.

I. INTRODUCTION

Petitioners Samsung Electronics Co., Ltd. and Samsung Electronics America, Inc. ("Petitioners") requests *inter partes* review of claims 1–9, 11, 14–17, and 19–20 of U.S. Patent No. 9,941,830 ("the '830 patent").

II. GROUNDS FOR STANDING (37 C.F.R. § 42.104(a))

Petitioners certify that the '830 patent is available for IPR and Petitioners are not barred or estopped from requesting IPR to challenge the claims on the grounds herein. Petitioners file this Petition within one year of service of Patent Owner's ("PO") complaint against Petitioners in district court. *Resonant Systems, Inc. v. Samsung Electronics Co., Ltd. et al.*, Case No. 2:22-cv-00423 (E.D. Tex.) (served 10/31/2022, "Samsung litigation").

III. STATEMENT OF PRECISE RELIEF REQUESTED

Petitioners respectfully request cancellation under 35 U.S.C. §311 of claims 1–9, 11, 14–17, and 19–20 ("Challenged Claims") in view of:

Prior Art
Fukumoto, filed as a PCT application August 3, 2001; published February 14, 2002; prior art under 35 U.S.C. §102(b)[1] (EX1005)
Grant, filed as a PCT application on December 8, 2003; published December 21, 2006; prior art under 35 U.S.C. §102(b) (EX1006)
Barton, filed on April 28, 2005; published November 2, 2006; prior art under 35 U.S.C. §102(b) (EX1007)
Ueda, filed as a PCT application on July 15, 2003; published September 2, 2004; prior art under 35 U.S.C. §102(b) (EX1008)
Erixon, filed as a PCT application on March 15, 2006; published July 24, 2008; prior art under 35 U.S.C. §102(e) (EX1009)
Fuller, filed on July 3, 2006; published January 3, 2008; prior art under 35 U.S.C. §102(b) (EX1010)
Dong, filed on February 20, 2009; published July 22, 2009[2]; prior art under 35 U.S.C. §102(a) (EX1011–EX1012)
Saiki, filed on April 12, 2000; issued on February 28, 2006; prior art under 35 U.S.C. §102 (b) (EX1013)
Masahiko, filed on July 26, 2011; published on February 2, 2012; and issued December 23, 2014; prior art[3] under 35 U.S.C. §102(a), (e) (EX1014)
Ogusu, filed on January 12, 1995; published on July 30, 1996; prior art under 35 U.S.C. §102(b) (EX1015–EX1016)

[1] All references to 35 U.S.C. §102, 103 are to the pre-AIA statutes.

[2] Dong qualifies as prior art for claims 9, 14, and 19 as Petitioners explains in Sections VII.A.7, VII.G.1.

[3] Masahiko qualifies as prior art for claim 16 as Petitioners explain in Section VII.I.1.

Grounds of Unpatentability	
1A	Claims 1–3, 7–9, 15, 17, and 20 are rendered obvious by Fukumoto.
1B	Claims 1–3, 7–9, 15, 17, and 20 are rendered obvious by Fukumoto and Grant.
1C	Claims 1–3, 7–9, 15, 17, and 20 are rendered obvious by Fukumoto and Barton.
1D	Claims 3–6 are rendered obvious by Fukumoto and Ueda.
1E	Claims 3–6 are rendered obvious by Fukumoto, Grant, and Ueda.
1F	Claims 3–6 are rendered obvious by Fukumoto, Barton, and Ueda.
1G	Claims 7–8 are rendered obvious by Fukumoto and Erixon.
1H	Claims 7–8 are rendered obvious by Fukumoto, Grant, and Erixon.
1I	Claims 7–8 are rendered obvious by Fukumoto, Barton, and Erixon.
1J	Claim 8 is rendered obvious by Fukumoto and Fuller.
1K	Claim 8 is rendered obvious by Fukumoto, Grant, and Fuller.
1L	Claim 8 is rendered obvious by Fukumoto, Barton, and Fuller.
1M	Claims 14 and 19 are rendered obvious by Fukumoto, Dong, and Ogusu.
1N	Claims 14 and 19 are rendered obvious by Fukumoto, Grant, Dong, and Ogusu.
1O	Claims 14 and 19 are rendered obvious by Fukumoto, Barton, Dong, and Ogusu.
1P	Claims 15 and 20 are rendered obvious by Fukumoto and Saiki.
1Q	Claims 15 and 20 are rendered obvious by Fukumoto, Grant, and Saiki.
1R	Claims 15 and 20 are rendered obvious by Fukumoto, Barton, and Saiki.
1S	Claim 16 is rendered obvious by Fukumoto, Saiki, and Masahiko.
1T	Claim 16 is rendered obvious by Fukumoto, Grant, Saiki, and Masahiko.
1U	Claim 16 is rendered obvious by Fukumoto, Barton, Saiki, and Masahiko.
2A	Claims 1, 2, 7, 11, 15, 17, and 20 are rendered obvious by Ogusu and Fukumoto.
2B	Claims 1, 2, 7, 11, 15, 17, and 20 are rendered obvious by Ogusu, Fukumoto, and Grant.

2C	Claims 1, 2, 7, 11, 15, 17, and 20 are rendered obvious by Ogusu, Fukumoto, and Barton.
2D	Claims 3–6 are rendered obvious by Ogusu, Fukumoto, and Ueda.
2E	Claims 3–6 are rendered obvious by Ogusu, Fukumoto, Grant, and Ueda.
2F	Claims 3–6 are rendered obvious by Ogusu, Fukumoto, Barton, and Ueda.
2G	Claims 7–8 are rendered obvious by Ogusu, Fukumoto, and Erixon.
2H	Claims 7–8 are rendered obvious by Ogusu, Fukumoto, Grant, and Erixon.
2I	Claims 7–8 are rendered obvious by Ogusu, Fukumoto, Barton, and Erixon.

IV. OVERVIEW OF THE ’830 PATENT

A. *Specification*

The ’830 Patent (EX1001) discloses “linear vibration modules…that can be incorporated in a wide variety of appliances, devices, and systems to provide vibrational forces,” such as “consumer appliances” and “pagers.” *’830Pat.*, Abstract, 1:25–33, 3:1-7, 3:62–64, 4:17-21. Its linear vibration modules (“LVMs”) and linear-resonant vibration modules (“LRVMs”) “are linear in the sense that the vibrational forces are produced by a linear oscillation of a weight or component within the LVM or LRVM, rather than as a by-product of an unbalanced rotation,” addressing problems with prior art unbalanced vibration-inducing motors. *Id.*, 4:21–36.

Figure 4A depicts an LVRM including housing 402, weight 404, capping end magnet disks 414, 416, and coil 420:

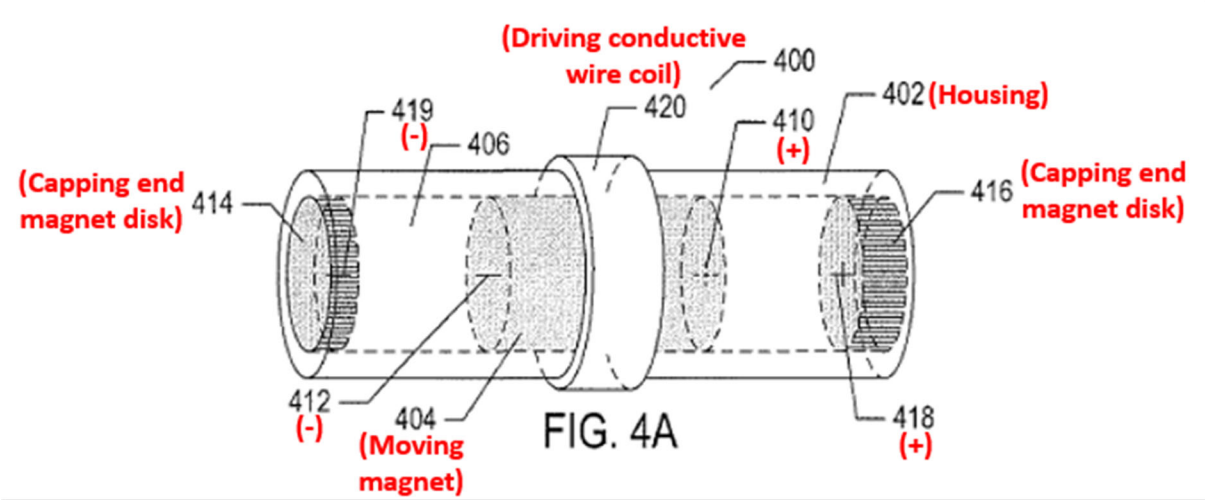

Id., Fig. 4A (annotated), 4:49–5:10. During operation, current is applied in a first direction to coil 420, creating magnetic force that accelerates weight 404 parallel to the housing, and current is then reversed resulting in acceleration in the opposite direction (i.e., "oscillates back and forth"). *Id.*, 5:11–41.

B. *Prosecution History*

During prosecution, the examiner issued one multi–part, non-final office action that included a rejection of claims 1–12 as obvious over USPub. 2011/0144426A1 ("Blenk") (EX1030) and USPub. 2011/0248817A1 ("Houston") (EX1031). *'830FH* (EX1002), 103–108. Then-Applicant responded only with arguments, traversing the Blenk-Houston rejection because Houston's controller resides in a computer separate from Blenk's vibrating device rather than within the

same "module." *Id.*, 118–121. Examiner responded with a notice of allowance lacking reasons for allowance.[4] *Id.*, 128–134.

V. LEVEL OF ORDINARY SKILL IN THE ART

A person of ordinary skill in the art at the time of the alleged invention of the '830 patent[5] ("POSITA") would have had a bachelor's degree in electrical engineering, mechanical engineering, computer science, or a similar field and two years of experience related to electronic consumer product design. The POSITA could have also obtained similar knowledge and experience through other means. *Wolfe*, ¶31.

---

[4] In IPR2023-00992 (filed concurrently), Petitioners explain that the '830 Patent claims are entitled to a priority date no earlier than June 13, 2016 because of a priority chain break. The Board need not address that issue here because Petitioners address the earliest priority date for certain claims below, assuming no priority chain break. For all other claims, the references are prior art even assuming priority to the earliest provisional date (May 18, 2009). Petitioners reserve the right to further address priority in other proceedings.

[5] For this petition, although certain claims have a later priority date, the formulation of the POSITA applies under that later date. *Wolfe*, ¶31.

VI. CLAIM CONSTRUCTION

A. Means-Plus-Function ("MPF")

No claim terms in the Challenged Claims use the term "means," and there is a rebuttable presumption that the claim terms are not MPF. *Williamson v. Citrix Online, LLC*, 792 F.3d 1339, 1348 (Fed. Cir. 2015). The presumption, however, is overcome for all "component" limitations in the Challenged Claims. *See* MPEP §2181 ("The following is a list of non-structural generic placeholders that may invoke 35 U.S.C. 112[, ¶6]: … 'component for.'"). Petitioners identify below the specific portions of the specification that describe the corresponding structure for each such limitation.

1. "moveable component"

Limitation (Function Underlined)	Corresponding Structure
Claims 1, 19, 20: "moveable component" (i.e., a component that moves)	A moving weight. *E.g.*, EX1001, Figs. 4A–4G (weight 404), Fig. 6 (oscillating mass 634).

2. "driving component"

Limitation (Function Underlined)	Corresponding Structure
Claims 1, 19, 20: "a driving component that drives the moveable component to oscillate within the housing"	One or more electromagnetic coils. *E.g.*, EX1001, Figs. 4A–4G (coil 420); Fig. 6 (coil 626); Fig. 13 (first coil 1302 and second coil 1304).

3. "control component"

Limitation (Function (or Additional Function for Dependent Claims) Underlined)	Corresponding Structure

Claims 1, 19, 20: "a control component that controls supply of power from the power supply to the driving component to cause the moveable component to oscillate at a frequency and an amplitude specified by one or more stored values "	Processor and H Bridge Switch, where processor is programmed with an algorithm to perform the following steps: (1) set the mode and strength to default values or values represented by selections made by user input to the user input features, (2) provide a corresponding output to the power supply, and (3) provide a corresponding output to the H-bridge switch. EX1001, 7:20–34, 8:20–30, Fig. 7A, Fig. 7C.
Claim 3: "wherein the control component receives output signals from sensors within the vibration module during operation of the vibration module and adjusts one or more operational control outputs of the control component according to the received output signals from the sensors"	Claim 1 structure with the processor further programmed with an algorithm to perform the following steps: (1) convert the received output signal into an integer, (2) compare that integer to a specific value, (3) adjust one or more operational control outputs based on that comparison. EX1001, 7:24–29, 7:42–8:19, Figs. 7A, 7B.
Claim 4: "wherein the control component adjusts the one or more operational control outputs of the control component according to the received output signals from the sensors in order that subsequent operation of the vibration module produces desired outputs from the one or more sensors corresponding to one or more operational control parameters"[6]	Claim 1 structure with the processor further programmed with the same claim 3 algorithm.

[6] Claims 5 and 6 depend from claim 4 and recite additional limitations related to "the one or more operational control parameters" and "the one or more operational control outputs." Petitioners address those limitations in the grounds below.

B. Claims 4–6

In claims 4–6, "the one or more operational control outputs of the control component," "the sensors," and "the one or more sensors" in claim 4 do not have proper antecedent basis, and Petitioners address multiple possible interpretations: (1) the first two terms should be "~~the~~ one or more operational control outputs of the control component" and "~~the~~ sensors," and (2) this claim should depend from claim 3 rather than claim 1. Because claims 4–6 are unpatentable under either possibility, the Board need not resolve the correct interpretation.[7] *See Realtime Data v. Iancu*, 912 F.3d 1368, 1375 (Fed. Cir. 2019). *Wolfe,* ¶¶123–126.

VII. DETAILED EXPLANATION OF GROUNDS

A. Ground 1A: Fukumoto Renders Obvious Claims 1–3, 7–9, 15, 17, 20

1. Fukumoto

Fukumoto discloses an electronic device, e.g., PDA or mobile phone, with an oscillatory actuator that generates vibration when receiving an input to a touch panel or operation key. *Fukumoto,* Abstract, 1:13–19, 17:60–65. Figure 3 shows a cross-sectional view:

[7] Petitioners reserve the right to raise and address indefiniteness, enablement, and/or written description issues regarding Claims 4–6 in other proceedings.

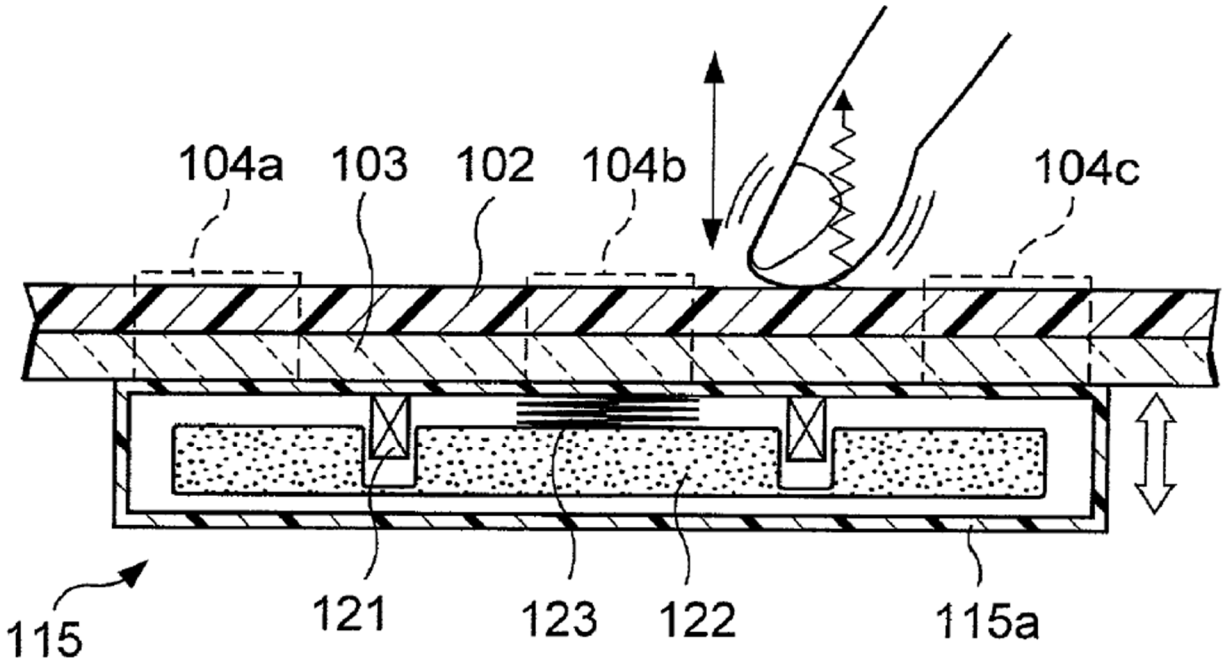

Id., Fig. 3, 14:27–16:37. Fukumoto's "oscillatory actuator" contains case 115a, moveable weight 122 supported by spring 123, and coil 121. *Id.*, 14:38–15:4. In Fukumoto, "movable weight 122 linearly reciprocates in the vertical direction in the figure by the magnetic force generated from the coil 121 when an AC (alternating) current (drive signal) is applied to the coil 121." *Id.*, 14:57–60.

Figure 1 depicts user input buttons 104a–c and touch panel 102:

FIG. 1

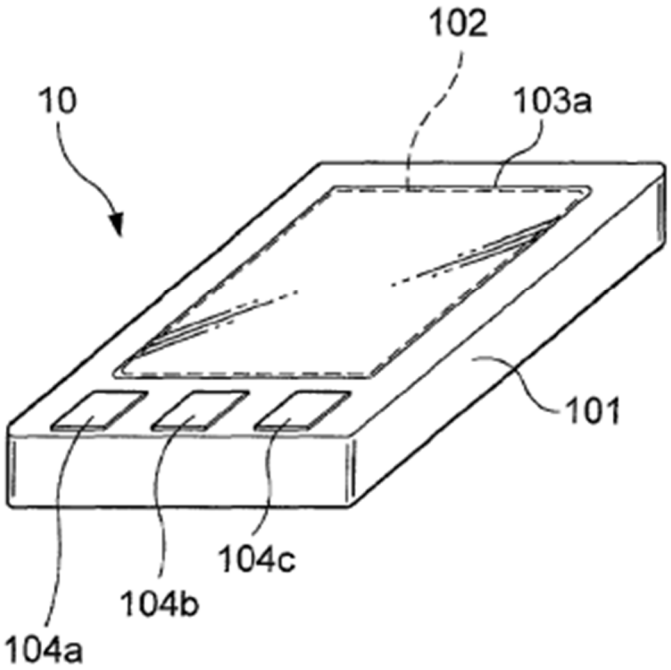

Id., Fig. 1, 13:41–53. Figure 2 depicts the PDA hardware in Figure 1:

FIG. 2

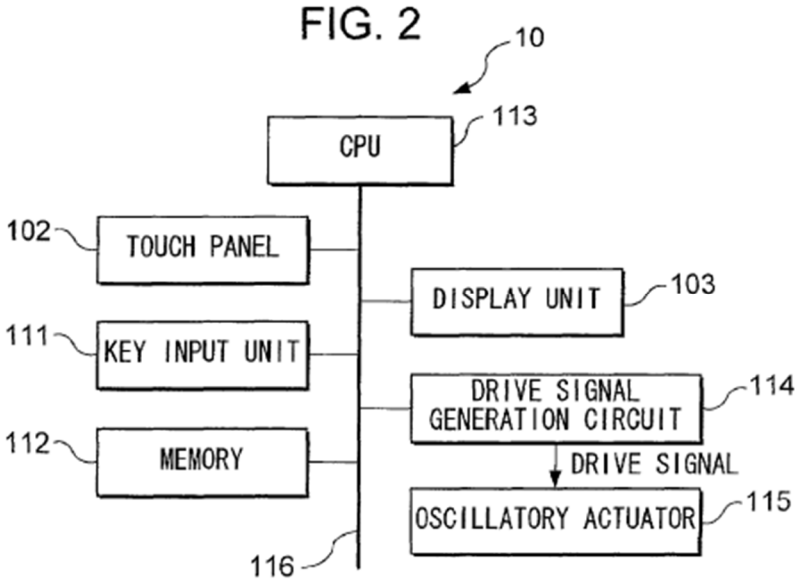

Id., Fig. 2, 13:54–14:26. Figure 5 provides a flow chart illustrating Fukumoto's operation:

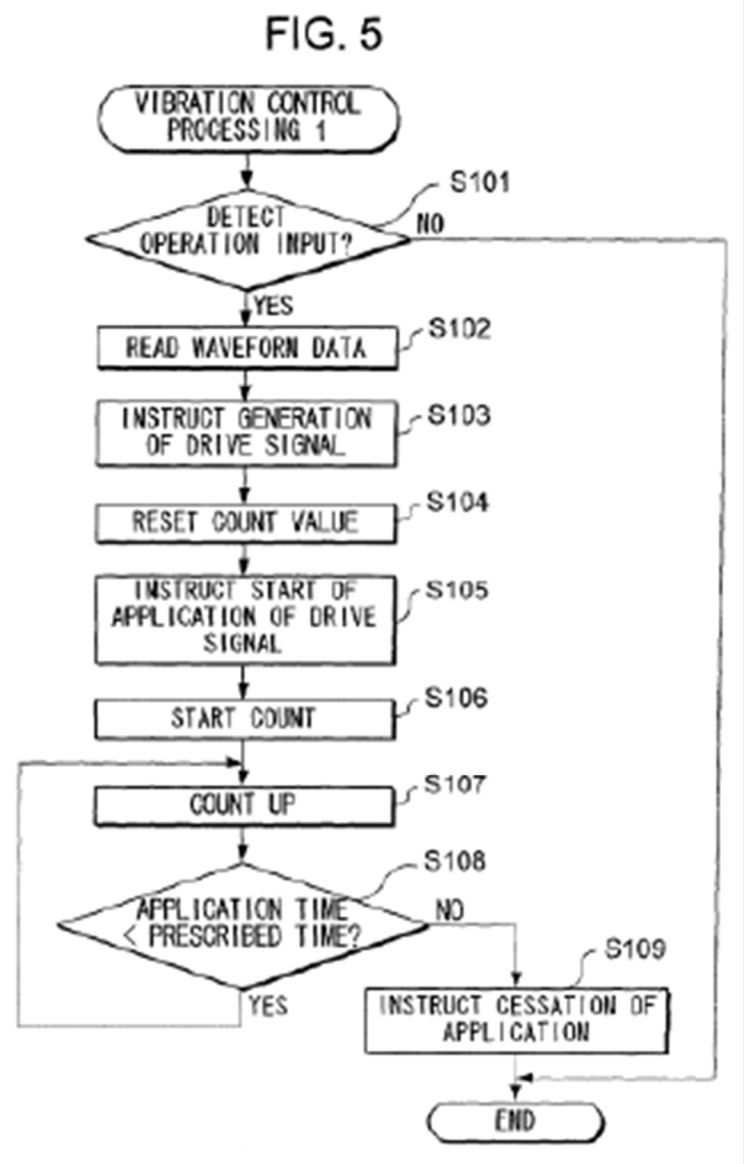

Id., Fig. 5, 16:60–19:3.

2. Claim 1

a. 1[pre]

To the extent limiting,[8] Fukumoto discloses or suggests the preamble. *Wolfe,*

[8] Petitioners reserve the right to argue that the preamble is limiting in other

¶¶157-160. Fukumoto discloses "[a]n electronic device drives an oscillatory actuator to cause generation of vibration...in a direction perpendicular to their respective front surfaces." *Fukumoto,* Abstract. Fukumoto's oscillatory actuator oscillates in the same way as the '830 patent. *Id.*, 14:20–24 ("oscillatory actuator 115 is a linear oscillatory actuator"), Fig. 3; *'830Pat.*, 3:11–25. Fukumoto's controller and vibrating device are contained in the same overall module.[9]

b. **1[a]**

Fukumoto discloses or suggests this limitation because the components of the oscillatory actuator are "housed inside the case 115a." *Fukumoto,* 15:56–59; *Wolfe,* ¶161.

---

proceedings.

[9] In its district court infringement contentions, PO asserts an entire mobile phone can be a "vibration module." EX1022, 70–75.

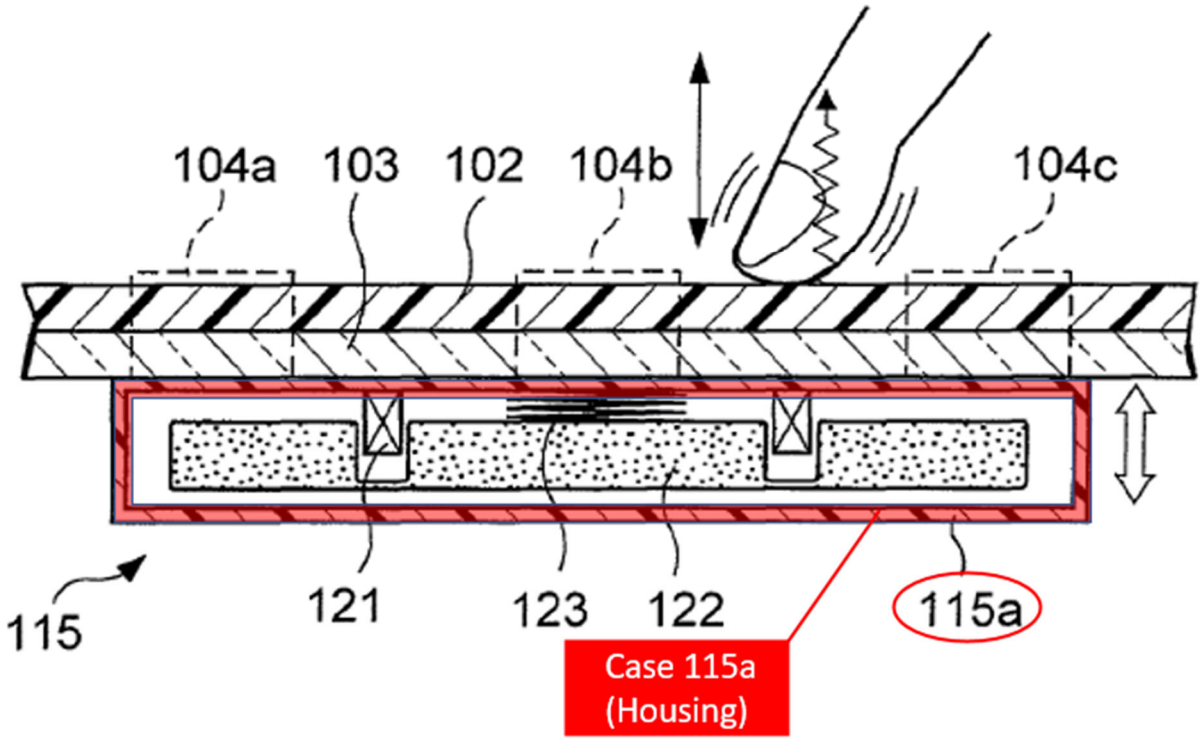

Fukumoto, Fig. 3 (annotated). Fukumoto's case 115a discloses or suggests a "housing." Alternatively, Figure 1 (above) shows Fukumoto's PDA has main case 101 which also discloses or suggests a "housing" under PO's district court infringement contentions. *Id.*; EX1022, 70–75.

c. **1[b]**

Fukumoto discloses or suggests this limitation under non-MPF or MPF. *Wolfe*, ¶¶162–164. For either, Fukumoto discloses a "columnar movable weight 122 made of permanent magnet." *Fukumoto,* 14:32–37.

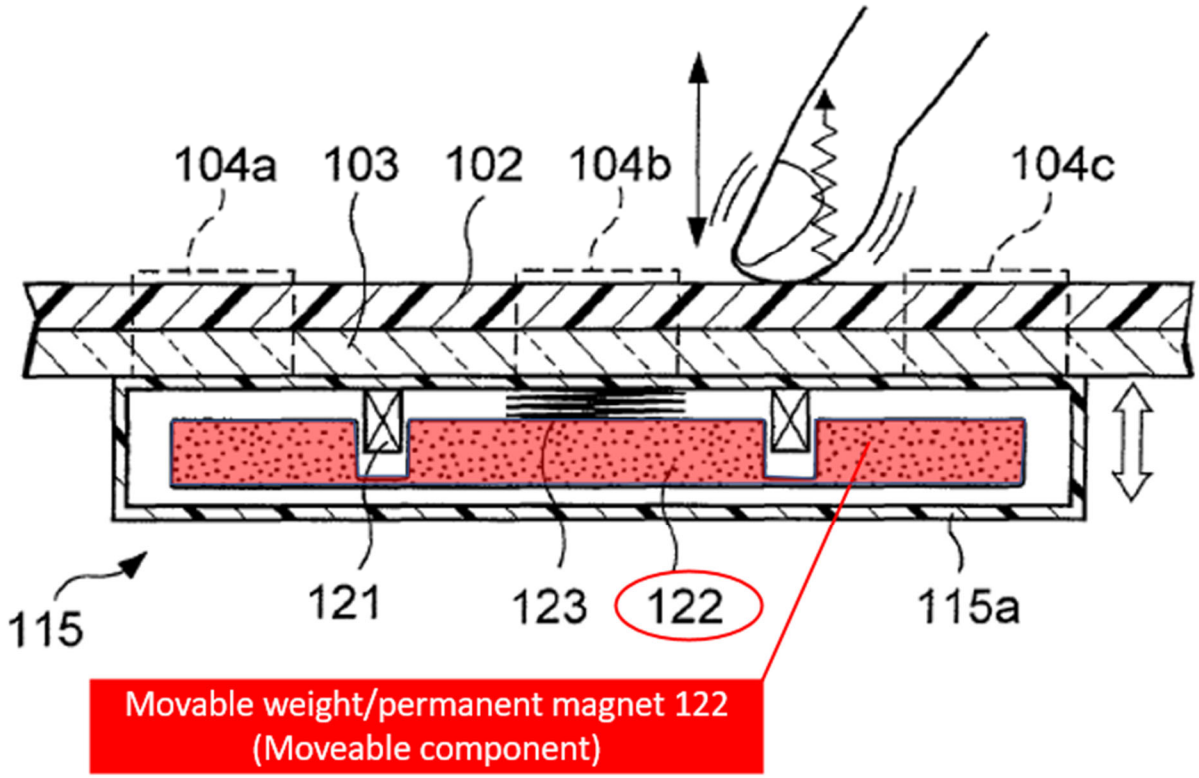

Id., Fig. 3 (annotated). Fukumoto discloses "[t]he movable weight 122 linearly reciprocates in the vertical direction in the figure." *Id.*, 14:57–60. Fukumoto's movable weight 122 discloses or suggests a "moveable component" (i.e., a moving weight that performs the recited function ("moves")). Section VI.A.1.

d. **1[c]**

Fukumoto discloses or suggests this limitation. *Wolfe,* ¶165. Fukumoto discloses "movable weight 122 linearly reciprocates in the vertical direction in the figure by the magnetic force generated from the coil 121 when an AC (alternating) current (drive signal) is applied to the coil 121." *Fukumoto*, 14:57–60. For oscillatory actuator 115 to vibrate at a resonant frequency, it requires "small drive

power," which "reduce[s] the power consumption." *Id.*, 16:44–50. A POSITA would have understood and found it obvious that the "small power" is supplied to the coil using a power supply. *Wolfe*, ¶165. Fukumoto discloses or suggests a "power supply."

e. **1[d]**

Fukumoto discloses or suggests this limitation. *Wolfe,* ¶¶166–168. Fukumoto discloses a PDA with a "touch panel" and "push-button type operation keys" for a user to "input[] operation instructions to the PDA 101." *Fukumoto*, 13:40–14:13.

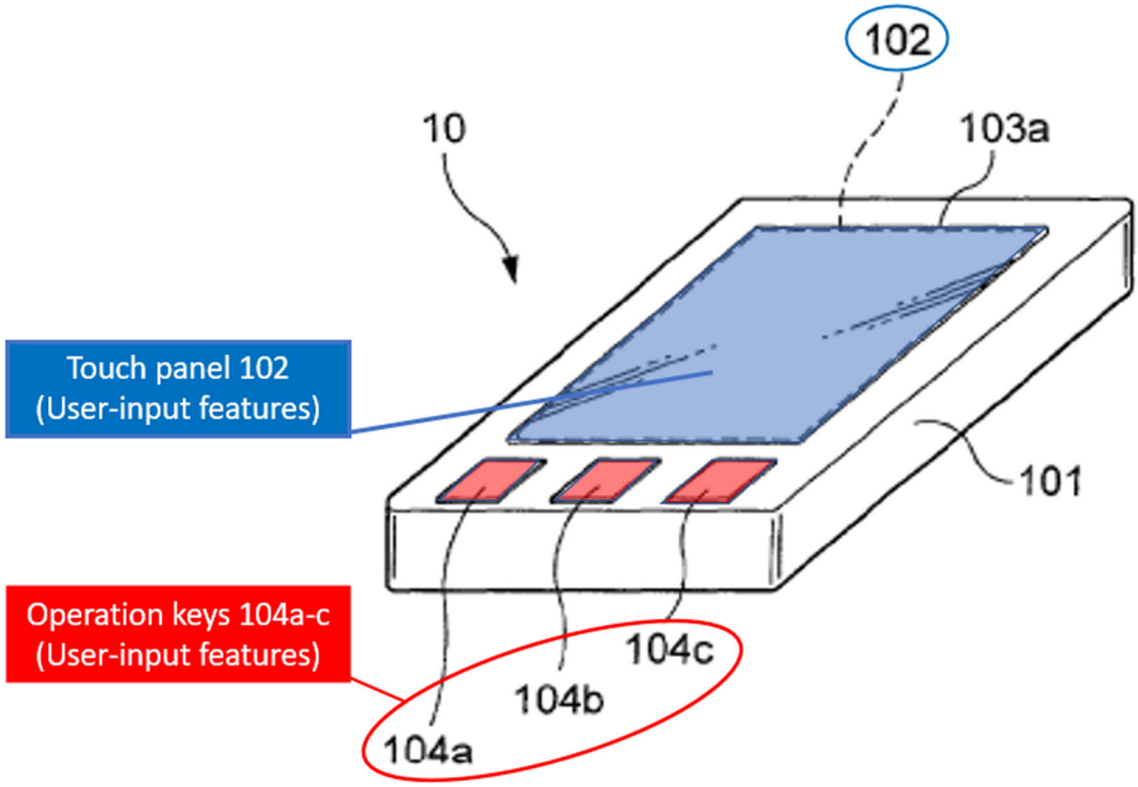

Id., Fig. 1 (annotated).

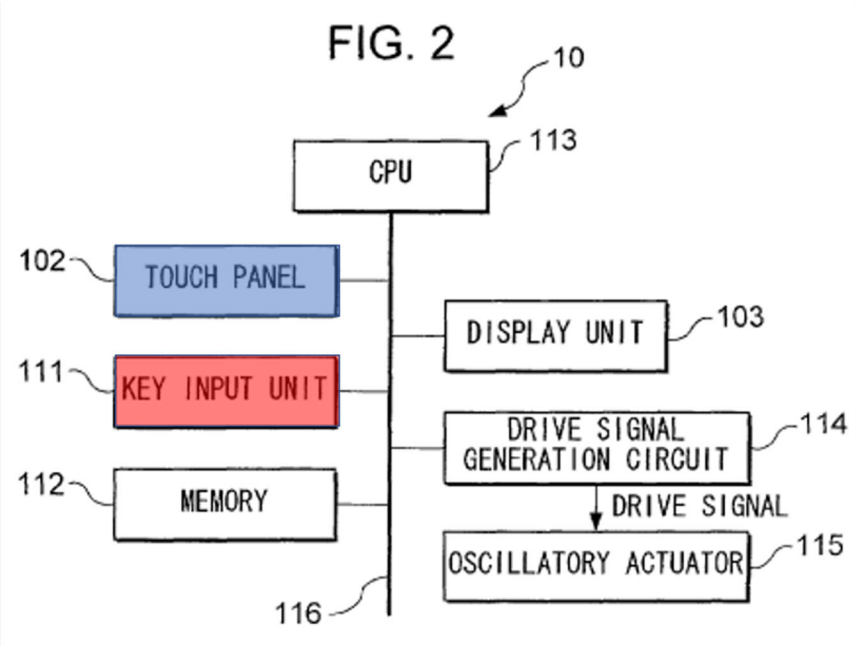

Id., Fig. 2 (annotated), 14:8–13, 30:48–53, 31:27–29, Fig. 41. Fukumoto's touch panel, push button keys, and slider disclose or suggest "user-input features."

f. **1[e]**

Fukumoto discloses or suggests this limitation under non-MPF or MPF. *Wolfe*, ¶¶169–171. For either, Fukumoto discloses "movable weight 122 linearly reciprocates in the vertical direction in the figure by the magnetic force generated from the coil 121 when an AC (alternating) current (drive signal) is applied to the coil 121." *Id.*, 14:57–60; *Wolfe*, ¶169.

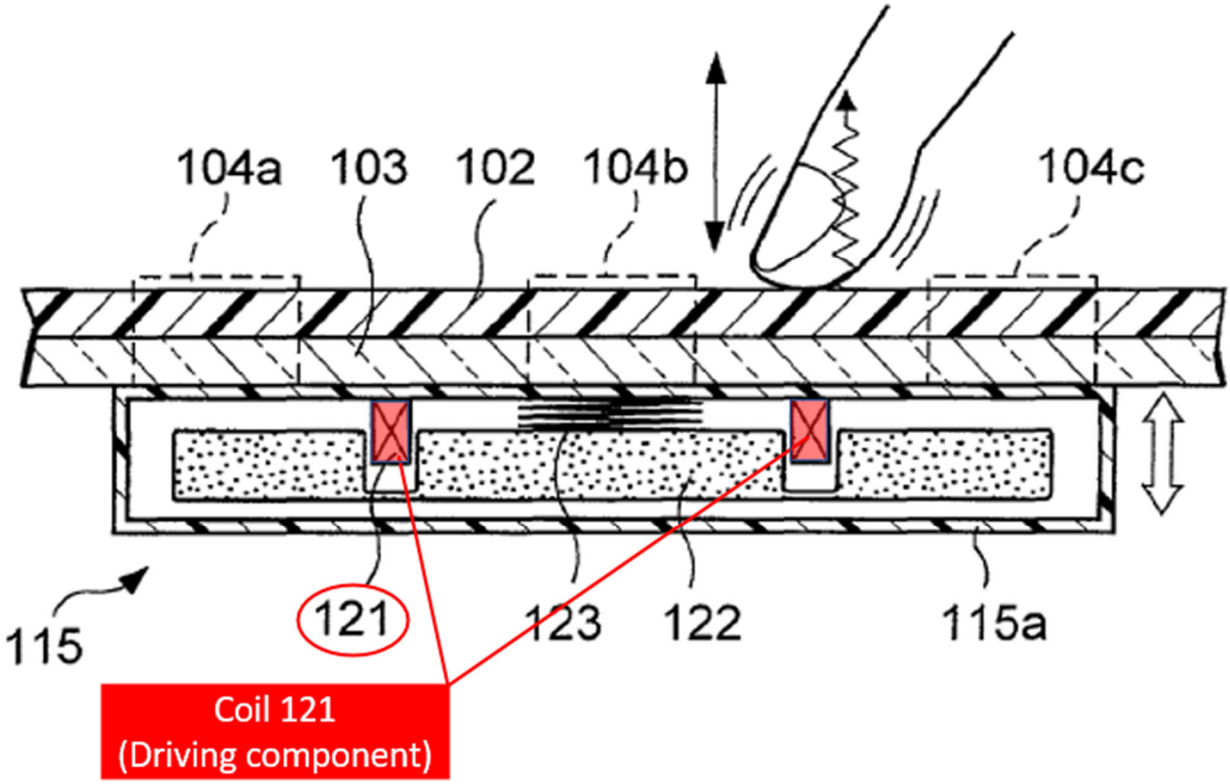

Id., Fig. 3 (annotated). Fukumoto discloses or suggests a coil 121 ("driving component") that causes movable weight 122 to reciprocate in the vertical direction within housing 115a when alternating current is applied to coil 121 ("drives the moveable component to oscillate within the housing") (i.e., a coil of conductive wire that performs the recited function). *Wolfe*, ¶¶169–171; Section VI.A.2.

g. **1[f]**

Fukumoto discloses or suggests this limitation under non-MPF or MPF. *Wolfe*, ¶¶172–185. For non-MPF, in Fukumoto, CPU 113 "executes a vibration control processing" using drive signal generation circuit 114 that generates drive signals for driving oscillatory actuator 115 according to waveform data. *Fukumoto*,

13:54–14:26. Figure 5 illustrates this process:

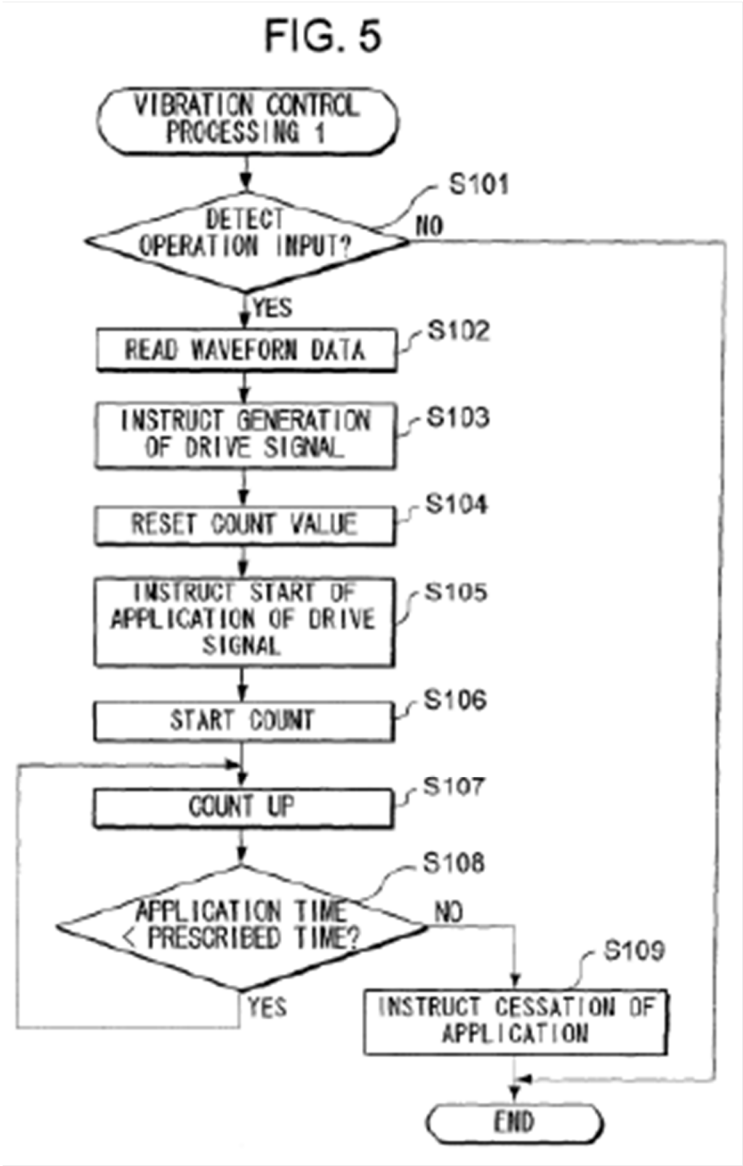

Id., Fig. 5, 16:60–19:3. Fukumoto's waveform data is stored in a table:

FIG. 33

112a

TOUCH BUTTON	AREA DATA	WAVEFORM DATA
A		
B		
C		
⋮	⋮	⋮

Id., Fig. 33. CPU 113 uses this data to generate a drive signal at drive signal generation circuit 114 sent to oscillatory actuator 115:

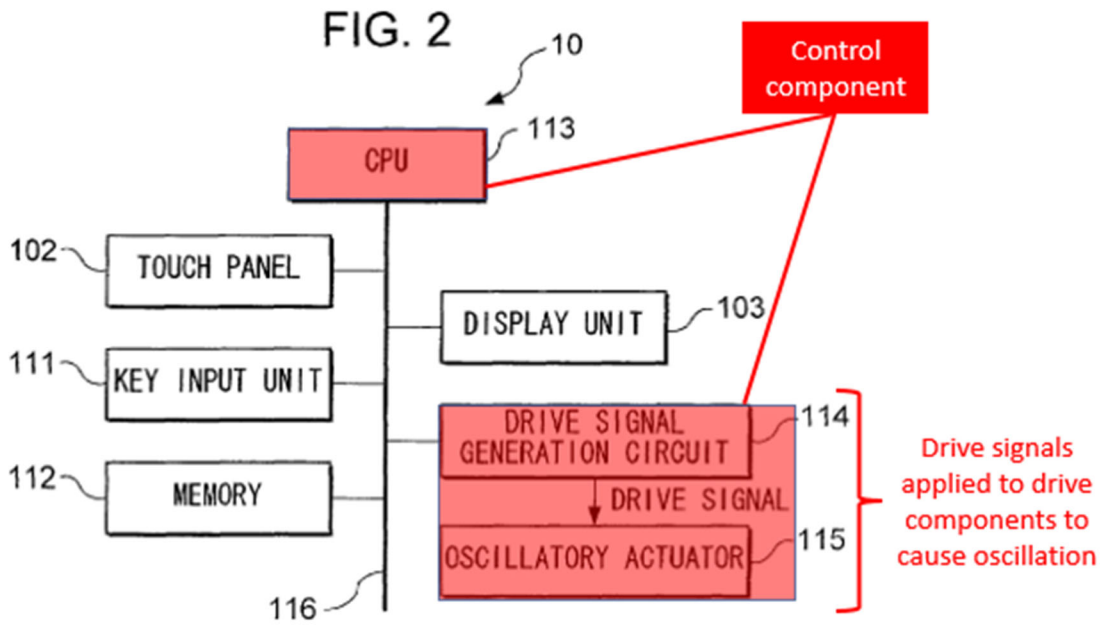

Id., Fig. 2 (annotated).

Restated, a user's input starts a sequence of CPU-driven events that results in

vibration of certain amplitude and frequency: a user touches a button or location of the touch panel; the CPU detects the touch location/button, reads the corresponding waveform data values from a stored table, and generates a drive signal sent to the oscillatory actuator to vibrate at the amplitude and frequency specified by the waveform stored in that table. *Id.*, 13:54–14:25, 29:15–18 ("The above-mentioned waveform data table 112a stores the frequency data, amplitude data, and the like required for generating these drive signals as the waveform data."), 48:42–47; *Wolfe*, ¶¶172–173.

Fukumoto's CPU 113 and drive signal generation circuit 114 ("control component") generate a drive signal for power to be applied to coil 121 in oscillatory actuator 115 ("controls supply of power from the power supply to the driving component") based on the stored waveform data, including frequency and amplitude, corresponding to the received user input ("to cause the moveable component to oscillate at a frequency and an amplitude specified by one or more stored values"). *Wolfe*, ¶173.

For MPF, Fukumoto discloses or suggests the recited function as discussed above. The corresponding structure includes a processor and an H bridge switch, where the processor is programmed with an algorithm to perform the following steps: (1) set the mode and strength to default values and/or values represented by selections made by user input to the user input features, (2) provide a corresponding

output to the power supply, and (3) provide a corresponding output to the H-bridge switch. *Wolfe*, ¶174; Section VI.A.3.

Fukumoto discloses CPU 113 ("processor") but does not expressly disclose an H-bridge switch. Instead, Fukumoto discloses applying an AC drive signal to coil 121 (*Fukumoto*, 14:57–60), but does not provide details about the circuitry used in Fukumoto to convert power supplied from, e.g., the battery in the electronic device to the AC drive signal. Dr. Wolfe explains components to do so were well-known at the relevant time, including H-bridge switches, oscillator circuits, and inverters. *Wolfe,* ¶¶175–183. A POSITA would have viewed any of these well-known options as equivalent because each would convert input power into the desired waveform. *Id.*

Finally, Fukumoto discloses an equivalent algorithm. When "at least one of the touch signal or key operation signal has been input," the CPU "reads from the memory 112 the waveform data of the drive signal to be applied to the oscillatory actuator 115." *Fukumoto*, 17:7–11. Doing so would "set the mode and strength to values represented by selections made by user input to the user input features." *Wolfe*, ¶183. Additionally, Fukumoto's CPU provides a corresponding output to the power supply when it "instructs the drive signal generation circuit 114 to generate a drive signal," and in response, "the drive signal generation circuit 114 generates a drive signal using the waveform data supplied from the CPU 113." *Fukumoto*,

17:20–26. As discussed above, a POSITA would have understood or found it obvious Fukumoto's power conversion from the battery into the desired waveform is equivalent to the '830 patent's algorithm step of providing an output to an H-bridge switch. *Wolfe*, ¶183.

Fukumoto discloses or suggests a processor, circuitry to convert power supplied from, for example, the battery in the electronic device to the AC drive signal (equivalent to the '830 patent's disclosed H-bridge switch), and an algorithm to perform the claimed function with at least equivalent steps to those disclosed in the '830 specification. *Wolfe,* ¶184.

3. Claim 2[10]

Fukumoto discloses or suggests claim 2's latter option (microprocessor and control program). *Wolfe*, ¶¶186–187; Section VII.A.2.g. Specifically, Fukumoto discloses CPU 113 executes a vibration control processing program stored in memory 112. *Fukumoto*, 14:5–13. Further, Fukumoto teaches "memory 112 stores waveform data of the drive signal for driving the oscillatory actuator 115." *Fukumoto*, 14:2–4. Fukumoto's CPU 113 ("microprocessor") executes vibration

[10] Petitioners reserve the right to challenge claim 2 under §112 in other proceedings on the basis that the disclosed variable oscillator circuit in the '830 patent only controls frequency and does not control amplitude of vibration.

control processing program ("control program"), and a POSITA would have understood that program would be "stored in an electronic memory within, or separate from, the microprocessor" so that CPU 113 could execute it. *Wolfe,* ¶187. That control program "control[s] supply of power from the power supply to the driving component to cause the moveable component to oscillate at a frequency and an amplitude specified by the one or more stored values." *Id.*; Section VII.A.2.g.

4. Claim 3[11]

Fukumoto discloses or suggests claim 3's additional limitations under non-MPF.[12] *Wolfe*, ¶¶188–191. Fukumoto's Figure 16 depicts an embodiment incorporating the hardware of Figure 3 and two oscillatory actuators 115a and 115b, providing vibration to both touch panel 102 and a user's palm:

---

[11] A POSITA would have understood that "sensors" generate signals. *'830Pat.,* Fig. 6, 6:44–51; *Wolfe,* ¶188.

[12] If this limitation is properly construed as MPF, claim 3 is unpatentable as obvious based on Grounds 1D–F below.

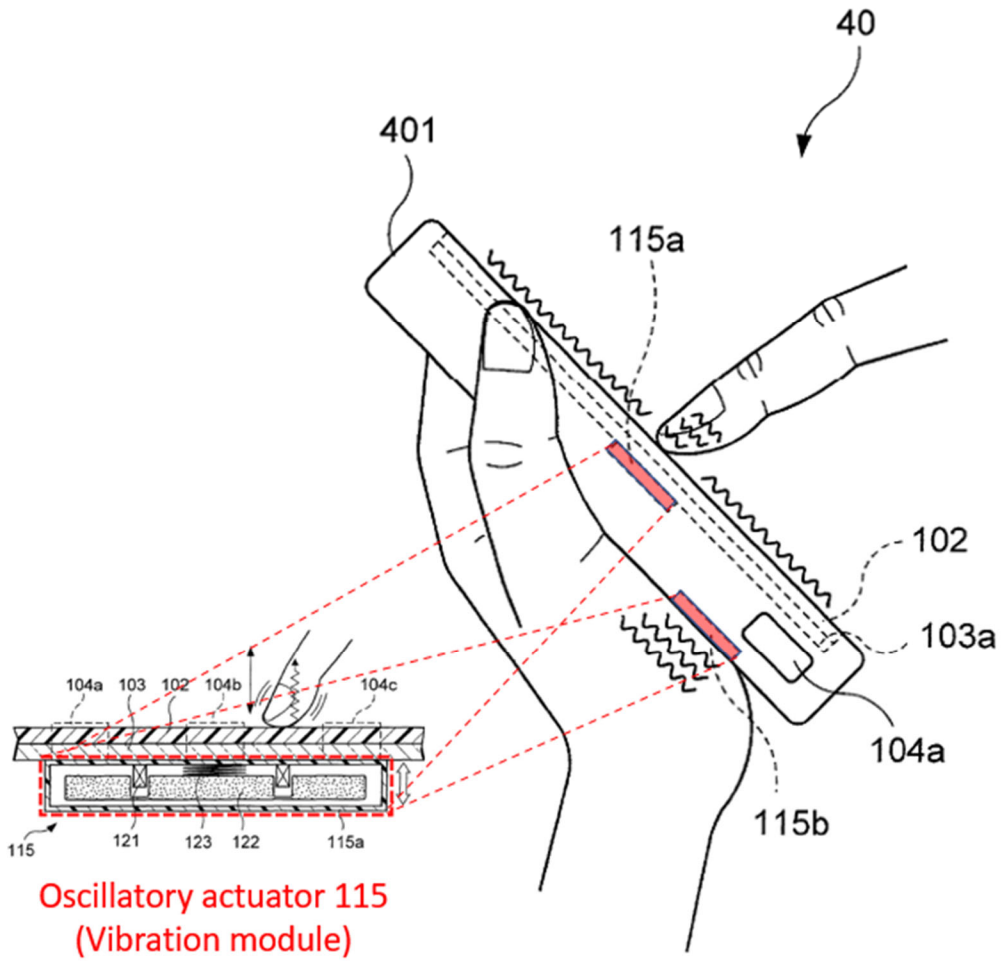

Id., Figs. 3, 16 (combined and annotated), 23:52–55, 23:63–24:8. The Figure 16 embodiment also incorporates a touch sensor, which senses whether a user is holding the PDA (*id.*, 24:32–40):

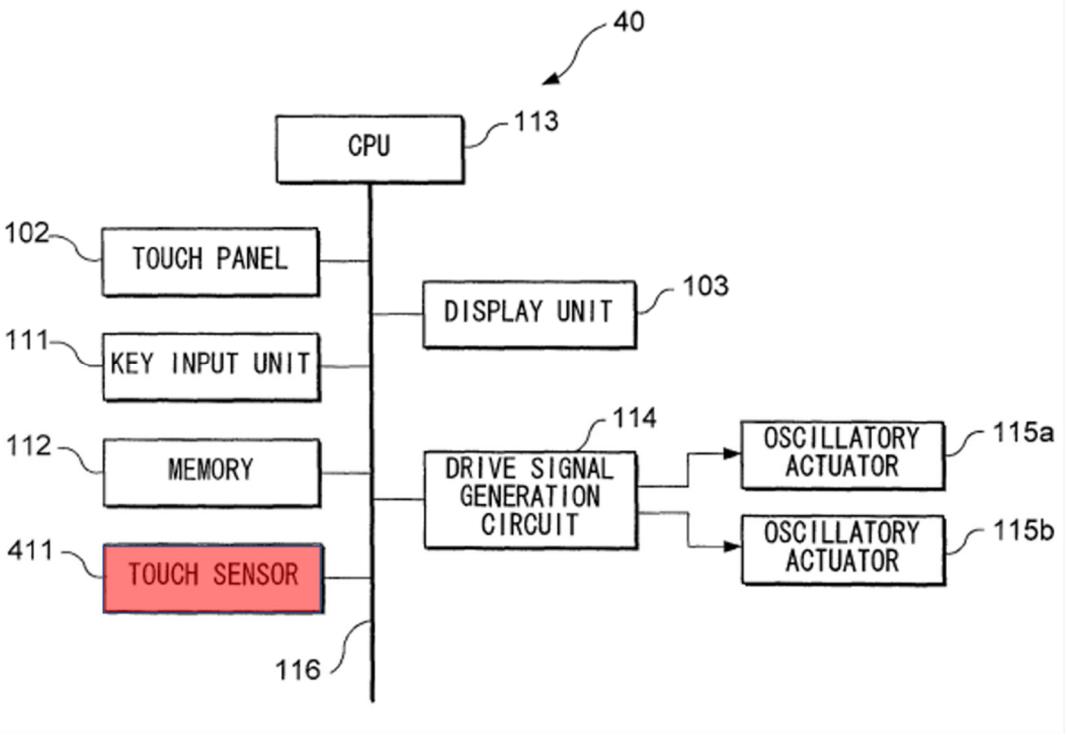

Id., Fig. 17 (annotated). Like the Figure 3 embodiment, CPU 113 executes vibration control processing, but "drives only one of the two oscillatory actuators 115a and 115b to generate vibration in accordance with the results of detection of the touch sensor 411." *Id.*, 24:52–58, 25:16–33.

A POSITA would have understood Fukumoto's touch panel 102 and touch sensor 411 are two separate, touch-based sensors associated with two separate oscillatory actuators within the same PDA. *Wolfe,* ¶190. Further, a POSITA would have found it obvious to combine the separate oscillatory actuator hardware elements into one that works with both sensors as a simple modification of existing hardware and software elements. *Id*.

Fukumoto's CPU 113 and drive signal generation circuit 114 ("control

component") receive output signals from touch panel 102 and touch sensor 411 ("receives output signals from sensors within the vibration module during operation of the vibration module") and cause vibration of either linear oscillator 115a or 115b depending on whether a user is holding the PDA ("adjusts one or more operational control outputs of the control component according to the received output signals from the sensors"). *Fukumoto*, 25:42-48; *Wolfe,* ¶191.

5. Claim 7[13]

Fukumoto discloses or suggests this limitation. *Wolfe*, ¶¶192–194; Section VII.A.2.f. Fukumoto discloses coil 121 used to drive movable weight 122:

[13] Petitioners reserve the right to argue claim 7 is not enabled, indefinite, and/or lacks written description support in other proceedings because the '830 patent's vibration module generates a magnetic force—not a magnetic field—parallel to the moveable component's directional movement.

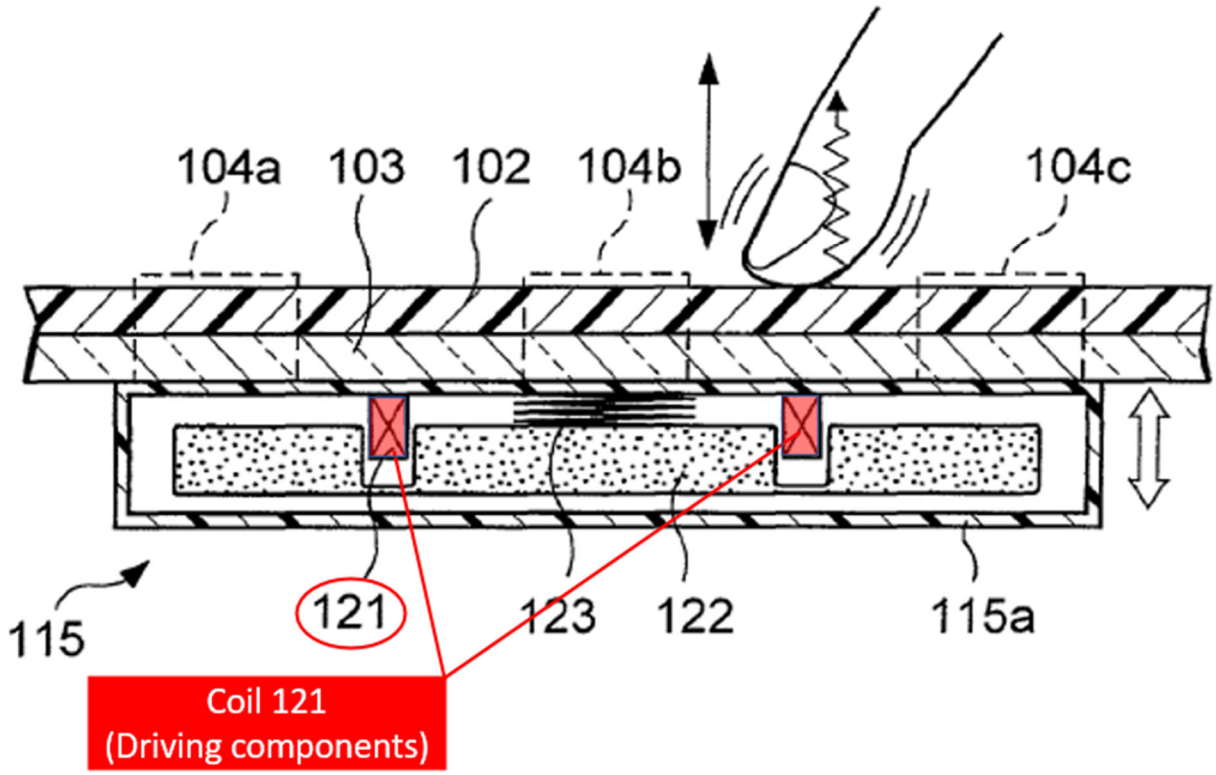

Id., Fig. 3 (annotated), 14:57–60. A POSITA would have recognized the magnetic fields are generated parallel to the direction of moveable weight 112's vibrational movement (i.e., so that moveable weight 112 moves up and down). *Wolfe*, ¶193. Fukumoto teaches this limitation in the same way the '830 Patent describes it. *Id.*

Fukumoto discloses or suggests coil 121 ("the driving component comprises one or more electromagnetic coils") "generate[s] magnetic fields parallel to the directions in which the moveable component is driven by the driving component." *Wolfe*, ¶194.

6. Claim 8

Fukumoto discloses or suggests claim 8's additional limitations. *Wolfe,*

¶¶195–201. PO contends in district court that a "tube" can have a rectangular cross-section. EX1028, 61. If this is correct,[14] Fukumoto's case 115a teaches a housing that is a tube:

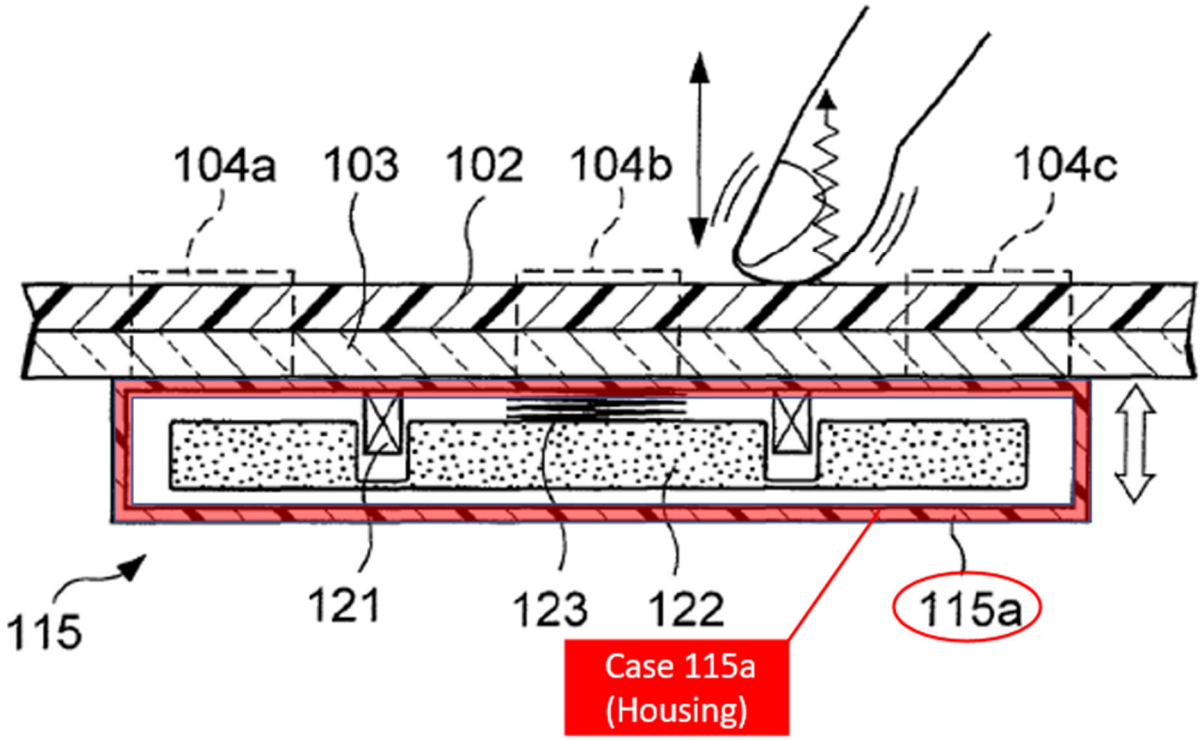

Id., Fig. 3 (annotated), 14:26–44.

A POSITA would have found it obvious for Fukumoto's case 115a to be "capped at both ends by movable-component-repelling components selected from one of mechanical springs and magnets." *Wolfe,* ¶197. Figure 3 depicts one end of

[14] Petitioners reserve the right to argue that a "tube" does not encompass a rectangular cross-section in other proceedings.

case 115a capped by spring 123. A POSITA would have been motivated to modify oscillatory actuator 115 to accommodate an additional spring on the opposite end of case 115a because Fukumoto expressly discloses an embodiment using multiple springs, which would dampen the vibration forces without damaging other components (e.g., the screen). *Fukumoto*, Fig. 83; *Wolfe,* ¶197. A POSITA would have also been motivated to make this modification to double the force of vibration created for greater effect while requiring less power:

FIG. 83

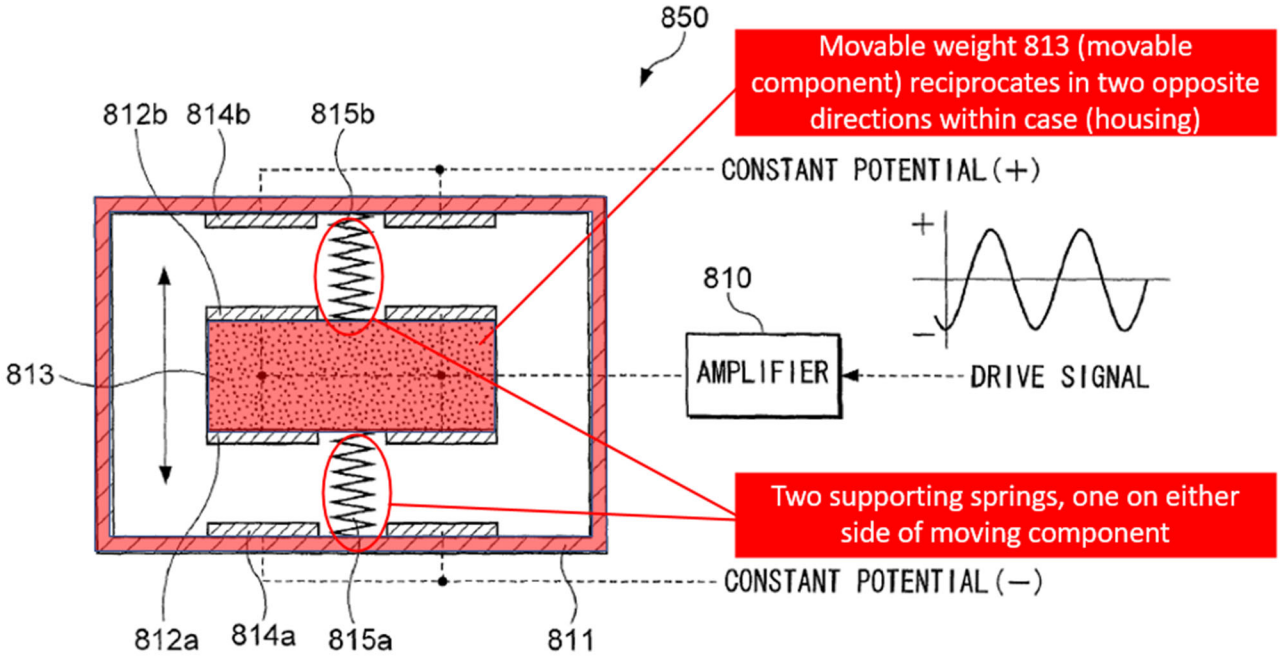

Id., Fig. 83 (annotated), 50:1–13; *Wolfe,* ¶197.

When the "movable-component-repelling components" are mechanical springs, a POSITA would not have understood "capped" to require the springs to act as end caps; because mechanical springs have open space, a POSITA would have

understood that such springs would have been attached to a surface of the housing. *Wolfe,* ¶198.

Fukumoto discloses "the movable component is a magnet shaped to slide within the tube" because Fukumoto's moveable weight 122 ("moveable component") is a permanent magnet and slides within case 115a. *Fukumoto*, 14:20-37.

Fukumoto's coil 121 ("driving component") is an electromagnetic coil. Section VII.A.2.f.

7. Claim 9

Claim 9's additional limitations would have been obvious based on Fukumoto's teachings. *Wolfe*, ¶¶202–207. Fukumoto discloses or suggests the limitations of claim 1, as well as "the housing is a tube, capped at both ends by movable-component-repelling components." Sections VII.A.2, VII.A.6.

Regarding "the moveable component includes an electromagnetic-coil driving component," Fukumoto discloses "a permanent magnet may be fixed in the case of the linear oscillatory actuator and a coil used as the movable weight." *Fukumoto*, 49:1–3. Following, a POSITA would have been motivated to move the coils into the moving portion in Fukumoto's Figure 3 embodiment. *Wolfe*, ¶203.

For "the moveable component includes…[a] microprocessor," when the vibration module has the driving component in the moveable component, a POSITA

would have been motivated to also include the microprocessor in the moveable component to: (1) increase the mass of the moveable component and (2) eliminate the need for connections (e.g., wires) between the vibration module's moveable and fixed components. *Wolfe*, ¶204.

First, a POSITA would have recognized that adding components to the moveable weight would be a predictable way to increase its mass and produce stronger vibrations. *Id.* Fukumoto itself supports this: "when the coil used as the movable weight does not have a sufficient mass, it is sufficient to use the coil as part of the weight having a suitable mass." *Fukumoto*, 49:3–7. Dong[15] teaches additional mass in the movable component can beneficially increase vibration strength. *Dong*, 6 (additional mass of "counterweight 15 functions to strengthen the vibrating force"). A POSITA would have been motivated to move additional components,

---

[15] Dong is used as support for the motivation to combine and not as an additional reference in this combination. Dong qualifies as prior art for claim 9, which is entitled to a priority date no earlier than May 18, 2010. Certain claim 1 limitations ("user-input features" and "frequency and amplitude specified by one or more stored values") do not have support in the May 18, 2009 provisional. Because claim 9 depends from claim 1, its earliest possible priority date is May 18, 2010, the date of the first non-provisional application. *Wolfe*, ¶205; EX1028.

such as the processor, into the moveable component to increase its mass. *Wolfe*, ¶205.

Second, when the coil is in the moveable component, a POSITA would have recognized that coil would need to be connected through wire(s) to other components (e.g., processor, power supply) in the vibration module's stationary portion, and would have recognized the drawbacks of such wire(s) (breakage from repeated motion, interference with the moveable component, etc.). *Wolfe*, ¶206. A POSITA would have been motivated to eliminate wire(s) connecting the moveable component to the stationary components, and would have understood a predictable way to do so would be to move the components necessitating the wire(s) into the moveable component as well. *Id.* Accordingly, a POSITA would have been motivated to include the microprocessor in the moveable component to co-locate it with the driving component and eliminate the need for wire(s) external to the moveable component. *Id.* A POSITA would have had a reasonable expectation of success in making this modification which would require only changes to hardware layout within the skill of a POSITA. *Id.*

8. Claims 15 and 20[16]

Claim 20 recites the same limitations as claim 1 along with dependent claim

[16] Petitioners reserve the right to challenge claims 15 and 20 under §112 in other

15's additional limitations. Fukumoto discloses or suggests the additional limitations. *Wolfe,* ¶¶208–210. In Fukumoto, both a vibration-causing waveform (Fig. 49) and a sound-causing waveform (Fig. 50) into one waveform can be used as a drive signal for the oscillatory actuator (Fig. 51):

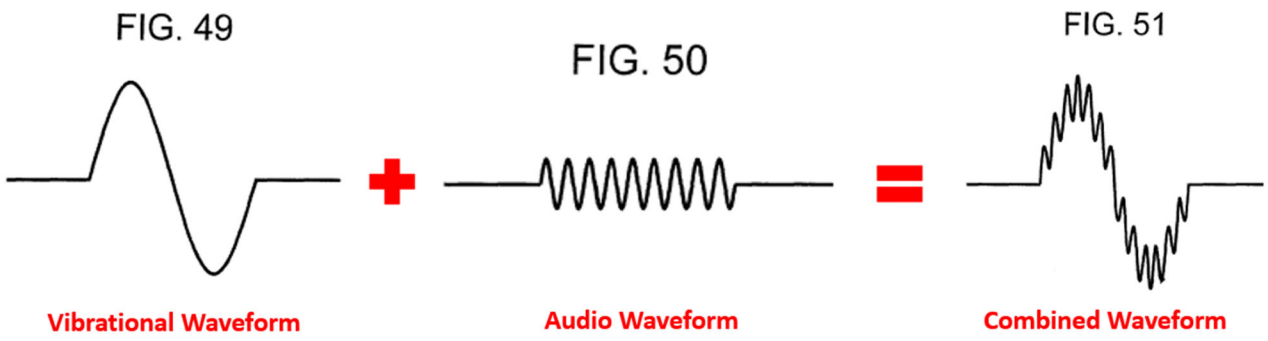

Fukumoto, Figs. 49–51 (combined and annotated), 18:15–17, 34:38–35:9. A POSITA would have recognized the different frequency and amplitude characteristics of the vibrational and audio waveforms (Figs. 49, 50, respectively) and combination of these two waveforms into one would create a complex vibration mode driving Fukumoto's moveable component at the plurality of different frequencies (Figure 51). *Wolfe,* ¶209.

9. Claim 17

Fukumoto discloses or suggests this limitation. Section VII.A.2.g; *Wolfe,* ¶¶211–212. Specifically, a user touches a button or location of the touch panel; the

---

proceedings.

CPU detects the touch location/button, reads the corresponding waveform data containing frequency and amplitude attributes from memory, and generates a drive signal sent to the oscillator actuator to vibrate according to the specified waveform's amplitude and frequency. *Id.*, Fig. 5, 13:54–14:25; 29:9–11 ("[T]he waveform of the drive signal linked with each touch button differs in amplitude or shape"), 29:15–18 ("The above-mentioned waveform data table 112a stores the frequency data, amplitude data, and the like required for generating these drive signals as the waveform data."); *Wolfe*, ¶211. In Fukumoto, amplitude can be changed independently from frequency. *Fukumoto*, 31:27–29 ("[CPU 113] can also change only the amplitude of the drive signal in proportion to the value of the parameter and change the magnitude of the vibration").

Fukumoto supplies power to the driving component causing the moving portion to oscillate at the frequency and amplitude based on the waveform corresponding to the touch panel or key press ("at a frequency and an amplitude that are independently specified by user input received from the user-input features"). *Wolfe*, ¶212.

B. Ground 1B: Fukumoto and Grant Render Obvious Claims 1–3, 7–9, 15, 17, and 20

1. 1[pre]–[e]

Fukumoto discloses or suggests 1[pre]–1[e]. Sections VII.A.2.a–VII.A.2.f; *Wolfe,* ¶216.

2. 1[f]

Fukumoto discloses or suggests this limitation under non-MPF or MPF. Section VII.A.2.g; *Wolfe*, ¶¶217–219. If PO argues Fukumoto does not disclose or teach this limitation, Fukumoto in combination with Grant teaches it. *Wolfe,* ¶218. In Grant, memory 140 stores program code "that enables a user to map an event of interest to one of the haptic effects as provided, e.g., via user-interface 112 through API 190" in "one-to-one mappings" "compiled into a haptic lookup table." *Grant*, [0026]. A user can program haptic effects using a touch screen, and each haptic effect can include specific amplitude and frequency. *Id*., [0022], [0031], [0034], [0037]–[0038], [0057].

Grant discloses or suggests programming a haptic lookup table (populating "stored values") via user-interface members 112, such as a touch screen ("user-input features") to map a unique haptic effect ("frequency and amplitude specified") to an event. *Wolfe*, ¶217. In the combination, a user would utilize Fukumoto's user-input features to create or update a mapping between a desired haptic effect (including frequency and amplitude) and an event ("frequency and an amplitude specified by one or more stored values"). When that event occurs (e.g., a key press), Fukumoto's control component would cause its moveable component to oscillate at that frequency and amplitude (that the user specified in the lookup table in the combination) under MPF or non-MPF. Section VII.A.2.g.

A POSITA would have found it obvious to implement Grant's user-programmed haptic codes in Fukumoto's mobile device. *Wolfe*, ¶¶213. First, a POSITA would have recognized that Fukumoto and Grant are combinable because both are directed to electromagnetic vibration generation in mobile devices. *Fukumoto,* 14:38–15:4, 50:48–59; *Grant*, [0004], [0021], [0033]; *Wolfe,* ¶213; *KSR, Int'l Co. v. Teleflex*, *Inc.*, 550 U.S. 398, 418 (2007).

Aa POSITA would have been motivated to use Grant's user-programmed haptic codes in Fukumoto's mobile device to allow for user-driven customization of haptic effects. *Wolfe*, ¶¶214–215. A POSITA would have recognized that the proposed combination would have amounted to the application of known programming steps and hardware (Grant's user-input to modify a haptic code lookup table) to a known device ready for improvement (Fukumoto's PDA with user-input features and waveform table) to obtain a predictable result (increased user control of haptic feedback for a particular event). *Fukumoto,* 4:31–65, 29:45–51; *Grant,* [0034], [0057]–[0059]; *Wolfe,* ¶214; *KSR*, 550 U.S. at 417.

3. Claims 2–3, 7–9, 15, and 20

Fukumoto discloses or suggests the additional limitations of claims 2–3, 7–9, 15, and 20. Sections VII.A.3–VII.A.8; *Wolfe,* ¶220. Because those claims depend from claim 1 or in the case of claim 20 recites the same limitations as claim 1 along with additional limitations, they would have also been obvious over the combination

of Fukumoto and Grant.

4. Claim 17

If PO argues Fukumoto does not disclose or suggest this limitation, Fukumoto in combination with Grant teaches it. Grant teaches a handheld communication device "that enables a user to map an event of interest to one of the haptic effects as provided, e.g., via user-interface 112 through API 190" in "one-to-one mappings" "compiled into a haptic lookup table." *Grant*, [0026], [0022], [0031], [0037]–[0038], [0057]. Grant discloses a user's ability to customize haptic effects to include "low-amplitude and high frequency vibrations" when receiving a call from a spouse, or "jolt-like pulses" of different amplitude and frequency when associated with an emergency event. *Id.*, [0034]. A POSITA would have recognized Grant's device enables a user, when programming haptic codes, to achieve desired haptic effects by independently varying amplitude and frequency attributes of the haptic effects (e.g., change one but not the other, lower one and increase the other, etc.). *Wolfe,* ¶¶221–222.

Grant causes a mobile device to vibrate ("oscillate") at a particular frequency and amplitude corresponding to the haptic effect programmed by a user ("at a frequency and an amplitude that are independently specified by user input") with the user inputs ("received from user-input features"). The Fukumoto-Grant combination as well as motivation to combine discussed in Section VII.B.2 for 1[f] apply equally

to claim 17. *Wolfe,* ¶223.

C. Ground 1C: Fukumoto and Barton Renders Obvious Claims 1–3, 7–9, 15, 17, and 20

1. 1[pre]–[e]

Fukumoto discloses or suggests 1[pre]–1[e]. Sections VII.A.2.a–VII.A.2.f; *Wolfe,* ¶226.

2. 1[f]

Fukumoto discloses or suggests this limitation under non-MPF or MPF. Section VII.A.2.g; *Wolfe*, ¶¶227–229. If PO argues Fukumoto does not disclose or teach this limitation, Fukumoto in combination with Barton teaches it. *Wolfe,* ¶228.

Barton relates to user customization of alerts triggered by an event on a mobile device, such as a cellphone, PDA, or pager. *Barton*, [0014]. Specifically, "using the mobile device's user interface, a user can select various alert settings according to the type of notification event," including "vibrating feedback." *Id.*, [0005], [0014], [0021]. Figure 1 of Barton is below:

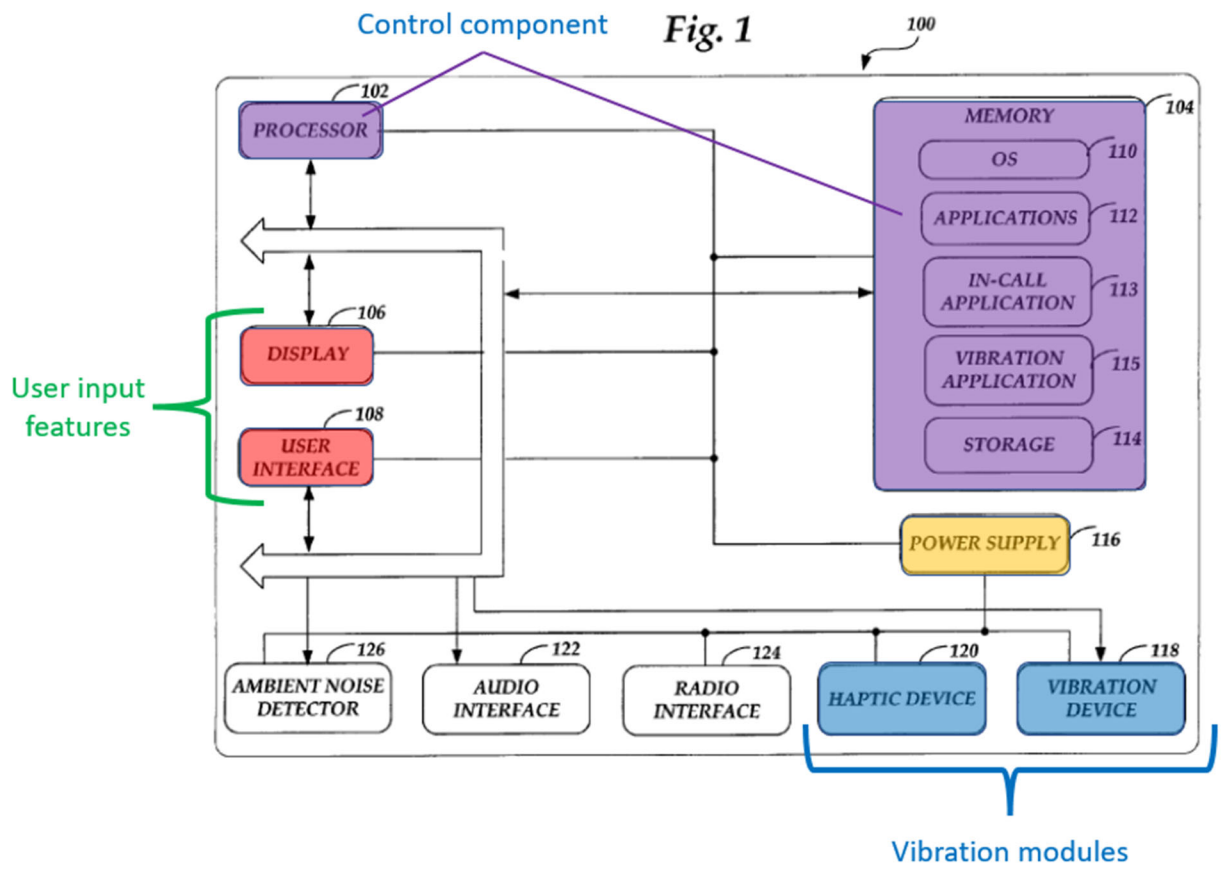

Id., Fig. 1 (annotated). User interface 108 may include "buttons" or "soft keys," and "a touch-sensitive display 106 can be used as an input device." *Id.*, [0021]. Mobile device 100 further includes vibration application 115 loaded onto memory 104, storage 114, power supply 116, vibration device 118, and haptic device 120. *Id.*, [0022]–[0024]. The vibration device 118 and haptic device 120 are "directly coupled to the power supply 116" so that each remains powered on "for a duration dictated by [a] notification mechanism or other control." *Id.*, [0024].

Barton's Figures 2A-2B show a flow diagram for a user creating an in-call profile using user interface 108. *Id.*, [0026]. Figure 2A is reproduced below:

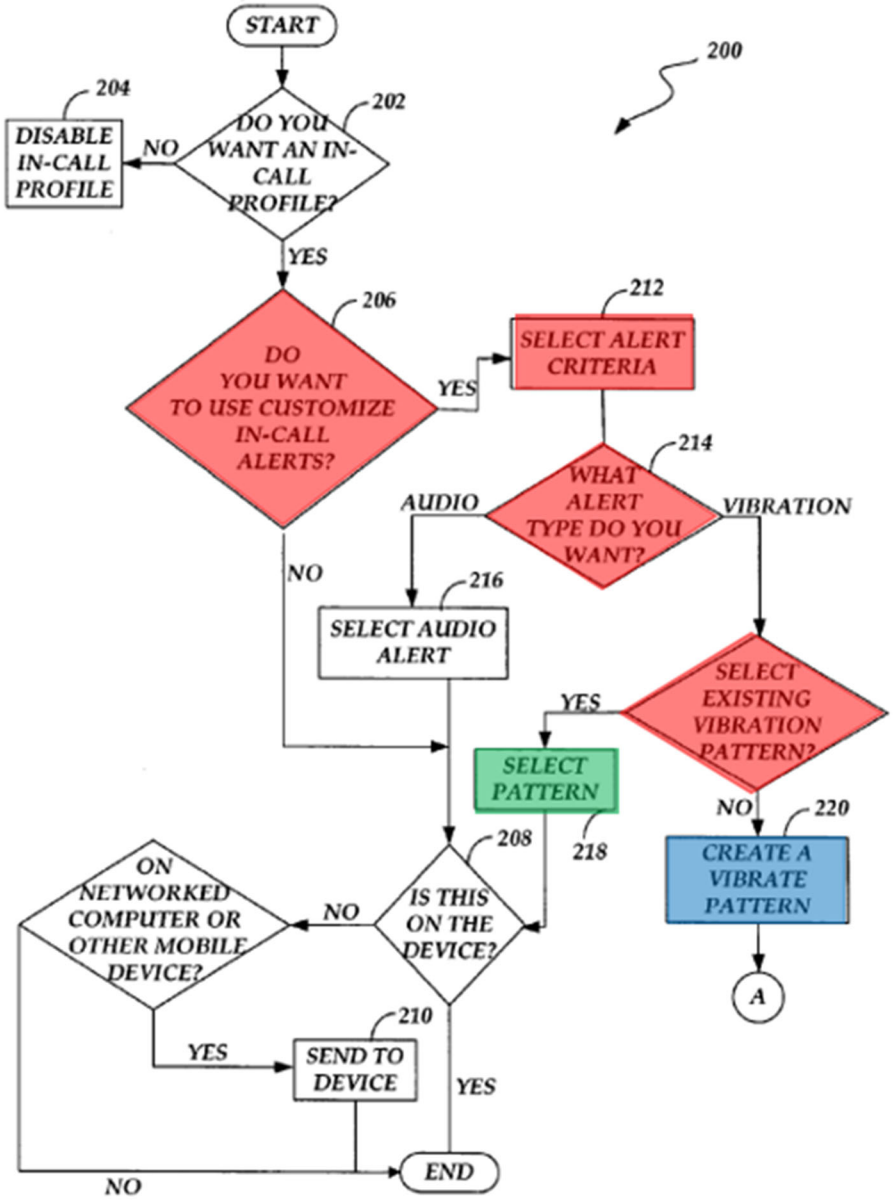

Fig. 2A

Id., Fig. 2A (annotated). As shown, if the user chooses to use in-call profile (202) to use customized in-call vibration-type alerts (206, 212, 214) and the user selects an existing vibration pattern (218) (green), in-call application 113 checks for a vibration pattern in storage location 114. *Id.*, [0033]. If the user chooses not to use existing

vibration patterns, the user can then create a vibration pattern (220) (blue). *Id.*, Fig. 2A, [0028]–[0033]. The flow diagram then proceeds to Figure 2B (below):

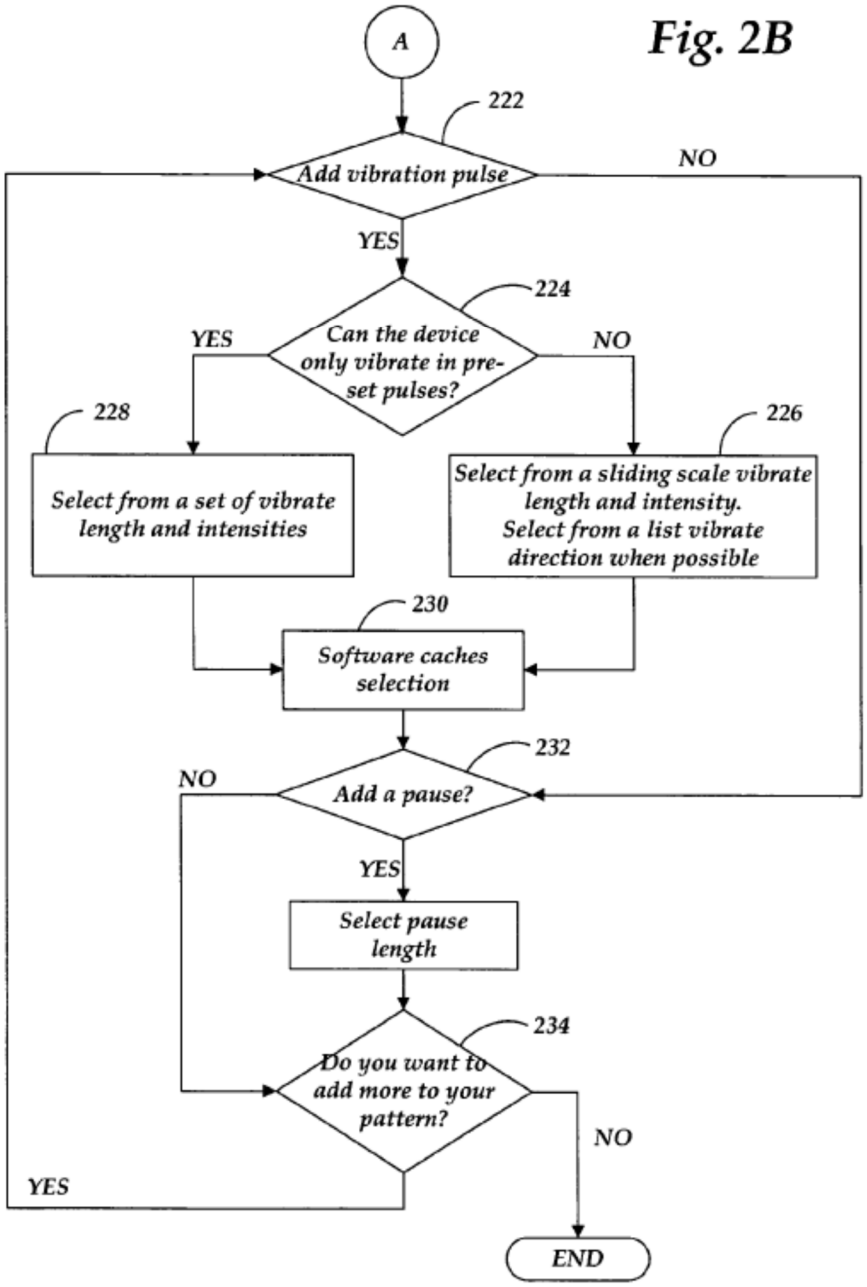

This figure depicts the process for a user creating a vibration pattern, which can be made up of a series of vibration pulses and pauses, using vibration application 115.

Id., [0034]. In such a vibration pattern, "feedback can be set using a sliding scale of intensities, frequencies, and durations." *Id.*, [0034], [0036]. "[T]he user using the vibration application 115 can create and/or edit vibrate patterns which are used by the mobile device 100 to control the operation of the vibration device 118…the user can use a sliding scale or other means to define various vibrate intensities, frequencies…by sliding a slider along the scale or inputting numbers which correspond to a particular amount or level." *Id.*, [0038].

A POSITA would have recognized that Barton discloses or suggests a user programming vibration patterns ("user inputs") via a user interface (e.g., buttons, soft keys, or a touch-sensitive display) ("user-input features") to create a vibration pattern with user-defined vibrate intensity ("amplitude specified") and vibration frequency ("frequency...specified") that is saved as a vibration pattern ("stored values"). *Wolfe*, ¶229. In the combination, a user would utilize Fukumoto's user-input features to create or update a mapping between a vibrate pattern (including frequency and amplitude) and an event ("frequency and an amplitude specified by user input received from the user-input features") stored in Fukumoto's waveform table ("stored values"). As discussed in Section VII.A.2.g, when that event occurs (e.g., a key press), Fukumoto's control component would cause its moveable component to oscillate at that frequency and amplitude (that the user specified in the lookup table in the combination) under MPF or non-MPF. *Wolfe*, ¶229.

A POSITA would have found it obvious to implement Barton's user-programmed vibration patterns in Fukumoto's mobile device. *Wolfe*, ¶224. First, a POSITA would have recognized that Fukumoto and Barton are combinable because both are directed to vibration generation in mobile devices. *Fukumoto,* 14:38–15:4, 50:48–59; *Barton*, [0005], [0014]; *Wolfe,* ¶224; *KSR*, 550 U.S. at 418.

A POSITA would have been motivated to use Barton's user-programmed vibration patterns in Fukumoto's mobile device to allow for user-driven customization of vibration effects. *Wolfe*, ¶225. A POSITA would have recognized that the proposed combination would have amounted to the application of known programming steps and hardware (Barton's user-input to modify a vibration or haptic pattern) to a known device ready for improvement (Fukumoto's PDA with user-input features and waveform table) to obtain a predictable result (increased user control of vibrating or haptic feedback for a particular event). *Fukumoto,* 4:31–65, 29:45–51; *Barton*, [0005], [0014], [0026], [0028]–[0039]; *Wolfe,* ¶225; *KSR*, 550 U.S. at 417.

3. Claims 2–3, 7–9, 15, and 20

Fukumoto discloses or suggests claims 2–3, 7–9, 15, and 20. Sections VII.A.3–VII.A.8; *Wolfe,* ¶230. Because those claims depend from claim 1 or in the case of claim 20 recites the same limitations as claim 1 along with additional limitations, they would have also been obvious over the combination of Fukumoto

and Barton.

4. Claim 17

If PO argues Fukumoto does not disclose or suggest this limitation, Fukumoto in combination with Barton teaches it. Barton's disclosures discussed in Section VII.C.2 are also applicable to claim 17. *Barton*, [0005], [0014], [0021]–[0024], [0038]. A POSITA would have recognized and found it obvious that Barton's device enables a user, when programming vibration patterns, to achieve desired patterns by independently varying amplitude ("vibrate intensities") and frequency attributes of those patterns (e.g., change one but not the other, lower one and increase the other, etc.). *Wolfe,* ¶¶231–233.

Barton causes a mobile device to vibrate ("oscillate") at a particular frequency and intensity corresponding to the vibration pattern programmed by a user ("at a frequency and an amplitude that are independently specified by user input") with the user inputs ("received from user-input features"). The Fukumoto-Barton combination as well as motivation to combine discussed in Section VII.C.2 for 1[f] apply equally to claim 17. *Wolfe,* ¶233.

D. Grounds 1D–F: Each of Fukumoto, Fukumoto-Grant, or Fukumoto-Barton and Ueda Renders Obvious Claims 3–6.

Claims 3–6 would have been obvious over Fukumoto and Ueda. Those claims would have also been obvious over Fukumoto-Grant and Ueda or Fukumoto-Barton and Ueda, for the same reasons discussed below. *Wolfe*, ¶234–254.

1. Combination of Fukumoto and Ueda

A POSITA would have been motivated to combine Fukumoto's mobile device utilizing an oscillatory actuator with Ueda's feedback control. *Wolfe,* ¶234. First, a POSITA would have recognized that Fukumoto and Ueda are compatible because they are both directed to vibration generation in mobile devices. *Wolfe,* ¶234; *Fukumoto,* Abstract, 37:5–12, Fig. 81; *Ueda*, Abstract, [0339]–[0349], Fig. 14. Further, a POSITA would have recognized that the proposed combination would have amounted to no more than applying a known technique (Ueda's feedback control) to a known device ready for improvement (Fukumoto's mobile device including its oscillatory actuator) to yield predictable results (an oscillatory actuator using feedback control to achieve the desired vibration output). *Wolfe,* ¶234; *KSR*, 550 U.S. at 417. A POSITA would have also been motivated to use additional sensors such as Ueda's output and position detection sensors in Fukumoto to provide enhanced feedback control to Fukumoto's oscillatory actuator because a POSITA would have recognized that doing so would result in Fukumoto's mobile device more reliably delivering vibrations at the desired frequency and amplitude. *Ueda*, [0165]–[0166], [0347]; *Wolfe,* ¶234.

2. Claim 3

The combination of Fukumoto and Ueda teaches claim 3's additional limitations under non-MPF or MPF. *Wolfe,* ¶¶235–243. For non-MPF, Ueda

discloses closed-loop feedback control for a linear vibration motor based on the output from multiple sensors. *Id.,* ¶236. Ueda teaches "motor driving apparatus 104 includes an output detector 4 for detecting the motor output generated by the linear vibration motor 100, and outputting an output detection signal Dop indicating the detected motor output." *Ueda,* [0141]. Driving voltage determining unit 7 receives "the output detection signal Dop from the output detector 4, and determines an amplitude value of the driving voltage of the linear vibration motor 100, i.e., an amplitude value of the AC voltage Vd to be supplied from the motor driver 1a to the linear vibration motor," by comparing the detected signal (Dop) with the desired output signal (Oop). *Id.,* [0149]. Based on this comparison, the amplitude value "is changed to a larger value when the detected output Dop is smaller than the order output Oop, and conversely, the amplitude value of the AC voltage Vd is changed to a smaller value when the detected output Dop is larger than the order output Oop." *Ueda,* [0162]; *Wolfe,* ¶236.

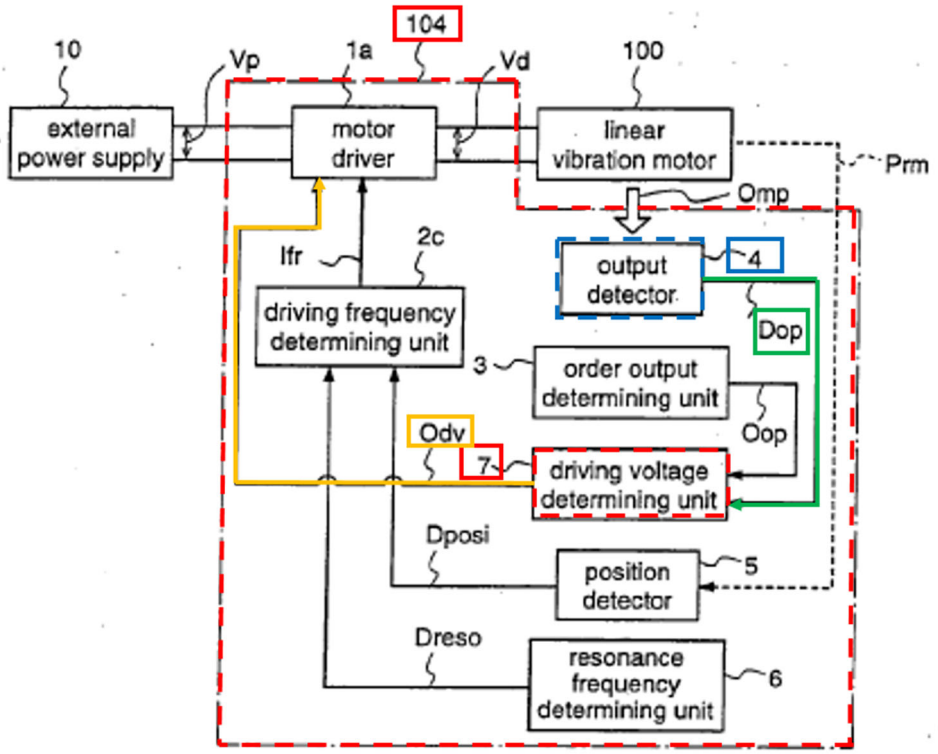

Ueda, Fig. 4(a) (annotated).

Ueda teaches this for a second sensor (position detector 5): "motor driving apparatus 104 further includes a position detector 5 for detecting the position of the reciprocating mover of the linear vibration motor 100, and outputting a position detection signal Dposi indicating the detected mover position." *Id.*, [0142]. Ueda further teaches "when the output AC voltage Vd of the motor driver is applied to the linear vibration motor 100…a position Prm of the reciprocating mover of the linear vibration motor 100 is detected by the position detector 5, and a position detection signal Dposi…is output from the position detector 5 to the driving frequency determining unit 2c," where "a driving frequency of the linear vibration motor 100 is determined on the basis of the position detection signal Dposi from the position

detector 5." *Id.,* [0157]–[0159]. When the position detection signal Dposi indicates "the detected position does not exceed a predetermined reference position, the driving frequency of the linear vibration motor 100 is set at the resonance frequency," but when the position detection signal Dposi exceeds the reference position "the driving frequency of the linear vibration motor 100 is set at a frequency higher than the resonance frequency." *Id.,* [0160]; *Wolfe,* ¶237.

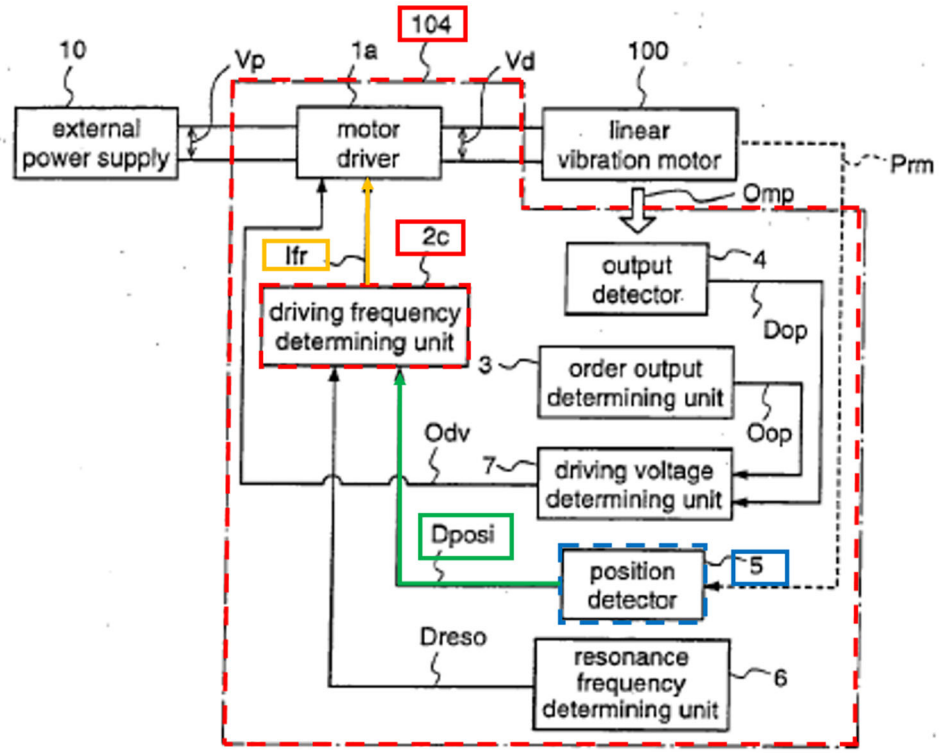

Id., Fig. 4(a) (annotated).

Ueda discloses receiving Dop ("output signal") from output detector 4 ("sensor") and receiving Dposi ("output signal") from position detector 5 ("sensor") during operation of the linear vibration motor 100 ("linear vibration module"), and adjusting amplitude based on Dop and adjusting frequency based on Dposi ("adjusts

one or more operational control outputs of the control component according to the received output signals from the sensors"). *Wolfe,* ¶238.

In the combination, Fukumoto's control component would receive the output signals from sensors as taught in Ueda and adjust the operational control outputs according to those signals. *Id.*, ¶239. As discussed above, a POSITA would have been motivated to use Ueda's feedback control with Fukumoto's linear oscillatory actuator, so that Fukumoto's mobile device more reliably delivers vibrations at the desired frequency and amplitude. *Id.*

For MPF, for the additional function recited in claim 3, the corresponding structure includes a processor programmed with an algorithm to perform the following additional steps: (1) convert the received output signal into an integer, (2) compare that integer to a specific value, and (3) adjust one or more operational control outputs based on that comparison. First, Ueda teaches converting Dop (the received output signal from output detector 4) into an amplitude value and converting Dposi (the received output signal from position detector 5) into a frequency. *Ueda,* [0149], [0152]; *Wolfe,* ¶¶241–242. Second, Ueda compares each of those converted values against a specific value (amplitude against Oop and frequency against Dreso). *Ueda,* [0149], [0152]–[0153]; *Wolfe,* ¶242. Finally, Ueda adjusts driving voltage and frequency (operational control outputs) based on those comparisons. *Ueda,* [0149], [0152]–[0153]; *Wolfe,* ¶242. For the reasons discussed

above, Ueda teaches a processor programmed with the additional algorithm steps, and a POSITA would have been motivated to use Ueda's feedback control (which includes those additional steps) with the linear oscillatory actuator of Fukumoto, so that Fukumoto's mobile device more reliably delivers vibrations at the desired frequency and amplitude. *Wolfe,* ¶242.

3. Claim 4

Fukumoto in combination with Ueda teaches claim 4's additional limitations. As discussed in Section VI.B, "[t]he one or more operational control outputs of the control component," "the sensors," and "the one or more sensors" in claim 4 do not have proper antecedent basis, and Petitioners address multiple possible interpretations: (1) the first two terms should be "~~the~~ one or more operational control outputs of the control component" and "~~the~~ sensors," and (2) this claim should depend from claim 3 rather than claim 1. Under either interpretation, Fukumoto in combination with Ueda teaches claim 4's additional limitations. *Wolfe,* ¶244.

Ueda's "motor driving apparatus 104" includes a linear vibration motor 100 with sensors including output detector 4 and position detector 5 used to sense and output respective signals Dop and Dposi. Section VII.D.1. Ueda's apparatus further includes a resonance frequency determining unit 6 that outputs "Dreso," a "resonance frequency signal," to the driving frequency determining unit 2c along with position detection signal Dposi. *Ueda*, [0142]–[0143].

Fig.4 (a)

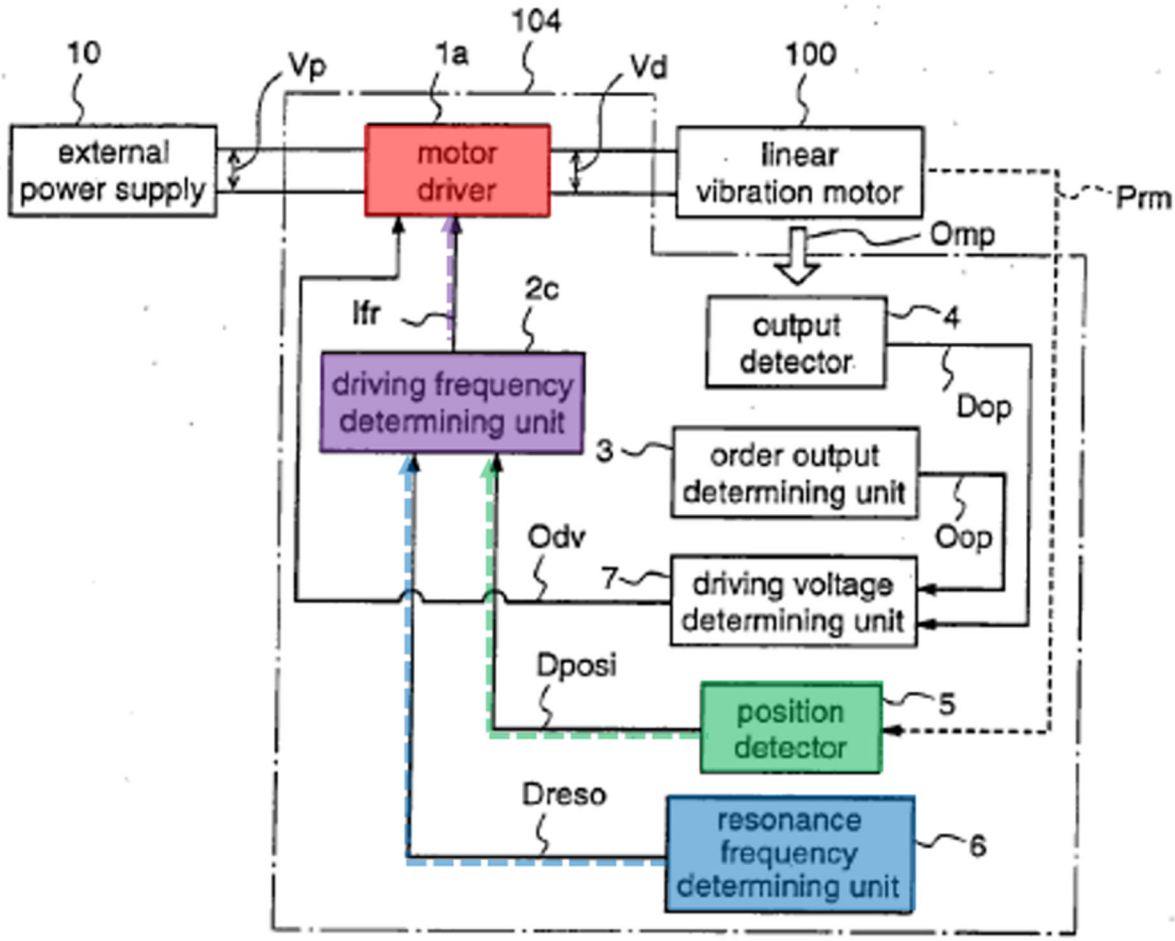

Id., Fig. 4(a) (annotated). Ueda provides operational control outputs (driving frequency Ifr, driving voltage Odv) to the linear vibration motor based on the received outputs from the output and position detectors (4, 5) and resonance frequency determining unit (6) so that the motor output (output detection signal Dop) approaches the desired motor output (output order signal Oop) and the position of the mover (position detection signal Dposi) is controlled to be within a desired range. *Ueda*, [0140], [0156], [0160]–[0162], [0169]–[0175].

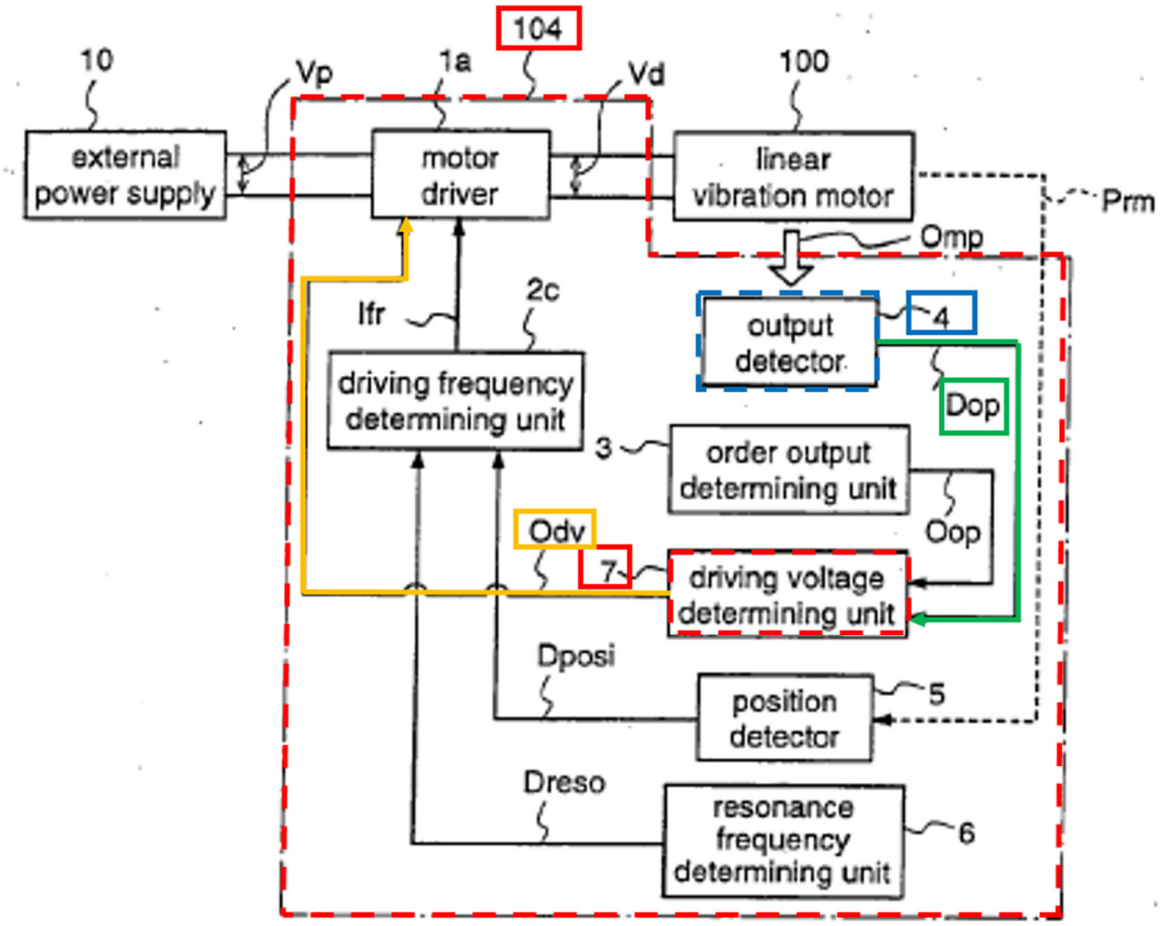

Id., Fig. 4(a) (annotated).

A POSITA would have been motivated to combine Ueda's feedback control with Fukumoto for the same reasons discussed in Section VII.D.1. *Wolfe,* ¶245.

4. Claim 5

For claim 5's additional limitations, as discussed in Sections VII.D.2–VII.D.3, one of Ueda's operational control parameters is output order signal (Oop), which is the desired strength of vibration produced by linear vibration motor 100. *Wolfe*, ¶247. Ueda teaches one of the "operational control parameters is a strength of vibration produced by the linear oscillation of the moveable component." *Id*.

One of Ueda's operational control outputs is driving frequency (Ifr) derived from the combination of position detector signal Dposi and resonance frequency determining unit signal Dreso. When Ifr is set to a resonant driving frequency, the control component (motor driving apparatus 104) drives the moveable component to linearly oscillate by dynamically adjusting the power supplied to the driving component to produce linear oscillation at resonant frequency. *Ueda*, [0157]–[0160]; *Wolfe,* ¶244. Driving frequency determining unit 2c adjusts the power supplied to the driving component as part of a standard closed-loop feedback control system. *Ueda*, [0152]–[0153]; *Wolfe*, ¶248. Based on Ueda's disclosure, a POSITA would have understood that in Ueda, detected position of the mover (Dposi) is compared to an expected position based on resonant frequency signal (Dreso); then the driving frequency is dynamically adjusted to match the resonant frequency by adjusting the power to the motor. *Ueda*, [0152]–[0153]; *Wolfe*, ¶248. For the handy phone, the driving frequency is adjusted to create more powerful (stronger) vibrations. *Ueda*, [0345]–[0347], [0349]. Ueda teaches "the one or more operational control outputs is a frequency at which the control component drives the moveable component to oscillate, the control component dynamically adjusting the power supplied to the driving component to produce oscillation of the movable component at a resonant frequency for the vibration module." A POSITA would have been motivated to combine Ueda's feedback control with Fukumoto for the same reasons

discussed in Section VII.D.1. *Wolfe,* ¶249.

5. Claim 6

Fukumoto and Ueda teach claim 6's additional limitations. *Wolfe,* ¶250. As discussed in Sections VII.D.1–VII.D.4, Ueda discloses an operational control parameter is strength of vibration. *Id*. Ueda further discloses an operational control parameter is a mode determined by a pattern of vibrations. *Ueda*, [0345]–[0346]; *Wolfe,* ¶250. Ueda discloses the operational control parameters include "both a strength of vibration produced by the linear oscillation of the moveable component and a current operational mode." *Wolfe,* ¶250.

Additionally, Ueda discloses one of the operational control outputs is a frequency (Ifr) at which the control component (motor driving apparatus 104) drives the moveable component to linearly oscillate. *Wolfe,* ¶251. Ueda also discloses one of the operational control outputs is a driving voltage (Odv) which is fed to the motor driver from the driving voltage determining unit 7 to determine "an amplitude value of an AC voltage" supplied to the linear vibration motor. *Ueda*, [0108]–[0110], [0141], [0149]; *Wolfe,* ¶251. Ueda discloses the resonance frequency determining unit 6 and driving voltage determining unit 7 adjust the AC current supplied to linear vibration motor 100 by adjusting the phase, frequency, and amplitude of the AC current. *Id.* Ueda teaches "a control output that determines a current supplied by the power supply to the driving component and a frequency at which the control

component drives the moveable component to linearly oscillate." *Wolfe,* ¶251.

A POSITA would have been motivated to combine Ueda's feedback control with Fukumoto for the same reasons discussed in Section VII.D.1. *Wolfe*, ¶252.

E. Grounds 1G–I: Each of Fukumoto, Fukumoto-Grant, or Fukumoto-Barton and Erixon Renders Obvious Claims 7 and 8

Claims 7 and 8 would have been obvious over Fukumoto and Erixon. Those claims would have also been obvious over Fukumoto-Grant and Erixon or Fukumoto-Barton and Erixon for the same reasons discussed below. *Wolfe*, ¶¶255–263.

1. Claim 7

Fukumoto discloses this limitation. Section VII.A.5; *Wolfe*, ¶256. If PO argues Fukumoto does not disclose or suggest this limitation, Fukumoto in combination with Erixon teaches it. *Wolfe*, ¶256. Erixon discloses an electromagnetic vibrator including a housing, coiling, permanent magnet assembly "arranged for motion along [a] track," and ferrofluid mixture. *Erixon,* Abstract, [0011]–[0015], [0037], [0102]. Voltage supplied to the coiling creates a magnetic field 16 "directed along the long axis of the housing" and interacts with a magnetic field from the axially-sliding magnet. *Id.*, [0055]–[0057].

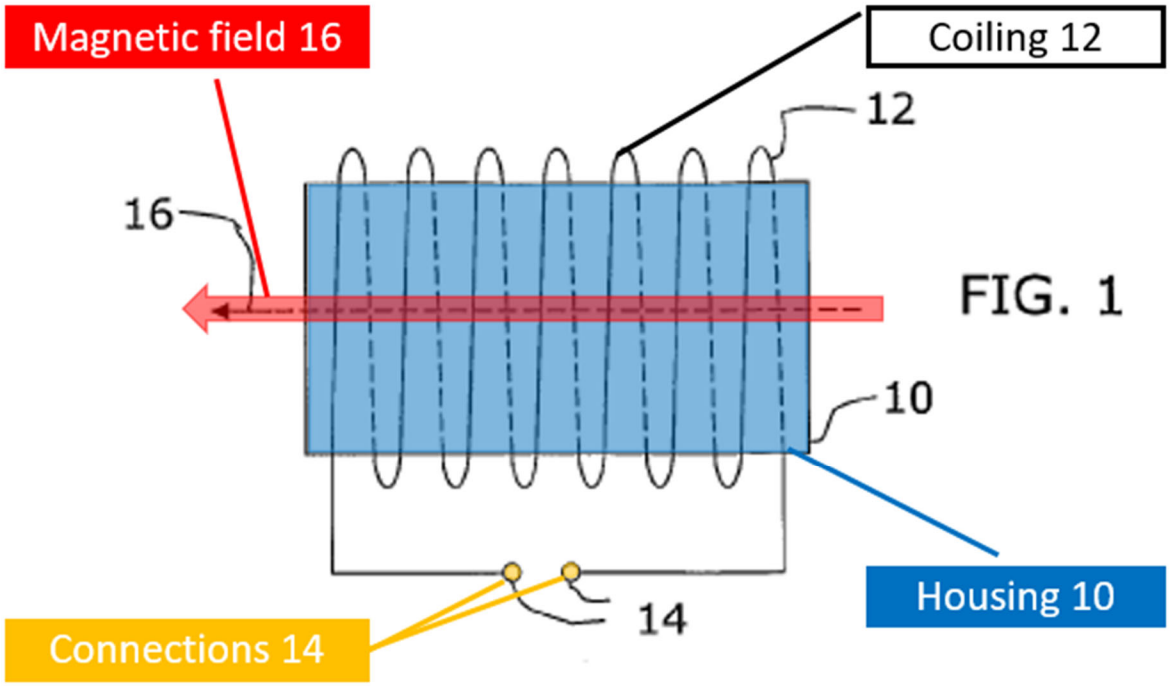

Id., Fig. 1 (annotated). A magnetic axis of the sliding magnet is "parallel with the symmetry axis of the cylindrical housing" such that "the directions of the magnetic axis and the center of the magnetic field, created by the coiling, coincide." *Id.*, [0056].

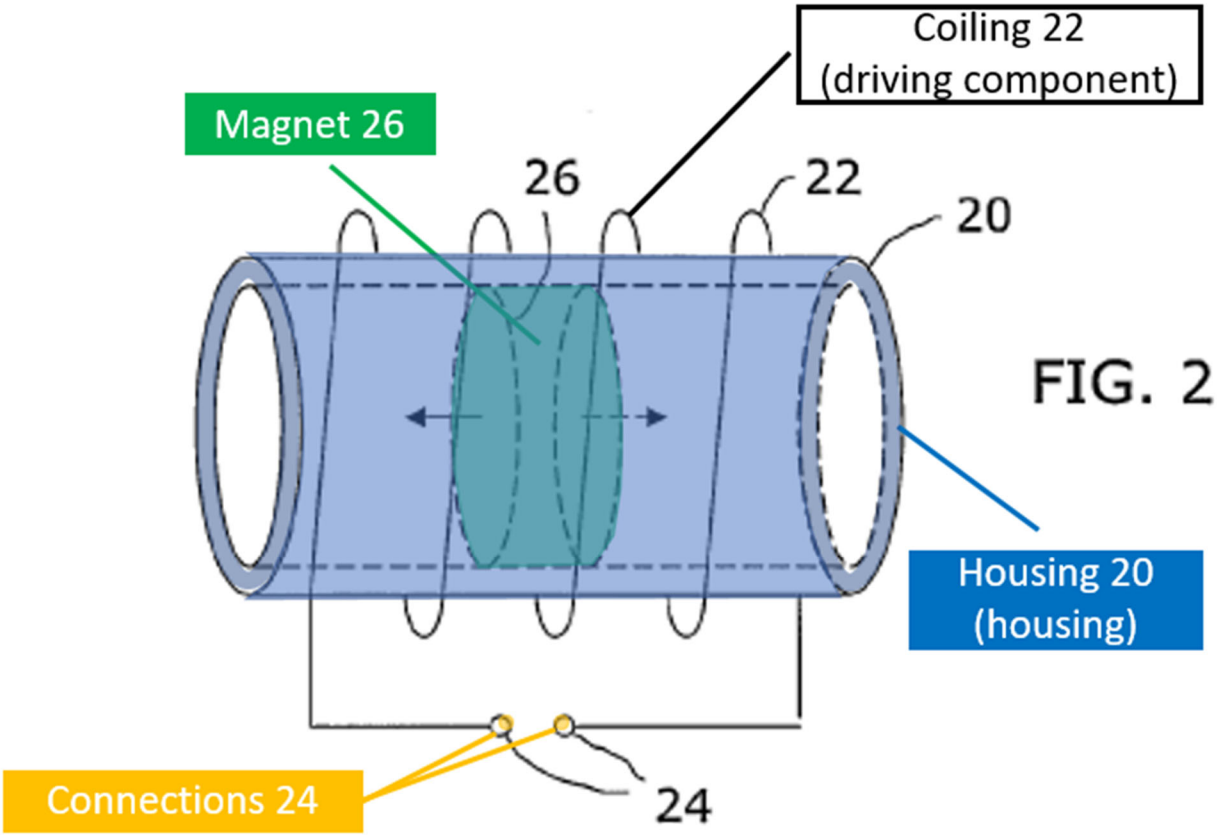

Id., Fig. 2 (annotated). Magnetic field lines 38 are "approximately parallel with the normal to the surface of the interface 39." *Id*., [0072].

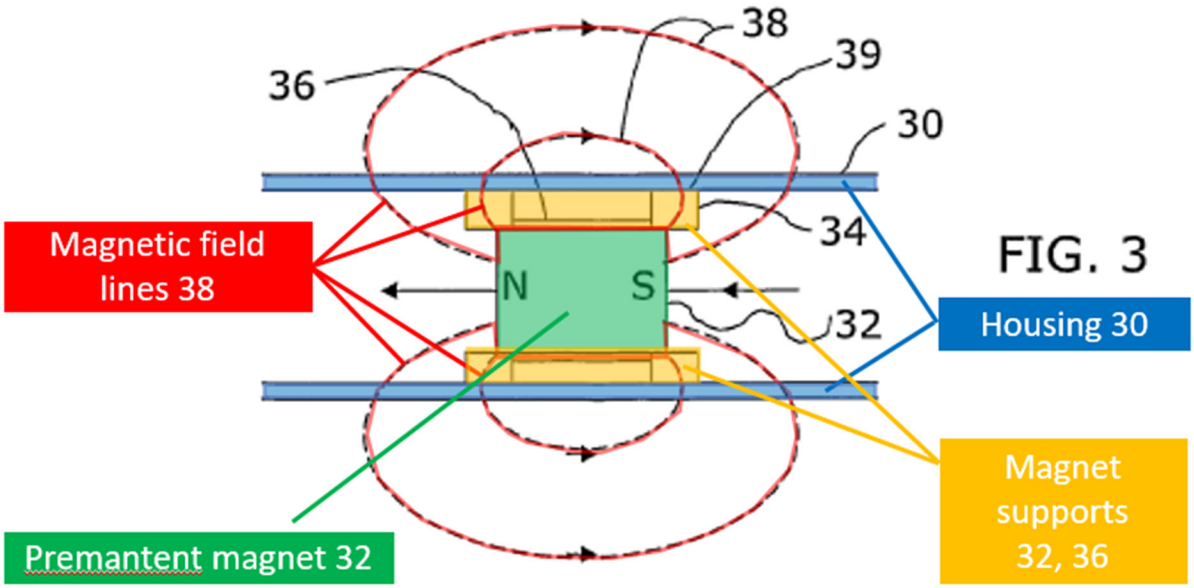

Id., Fig. 3 (annotated), [0063]–[0064]. Erixon discloses or suggests its coiling ("the driving component comprises one or more electromagnetic coils") "generate[s] magnetic fields parallel to the directions in which the moveable component is driven by the driving component." *Wolfe*, ¶256.

A POSITA would have found it obvious to apply Erixon's teachings of an electromagnetic vibrator for use in a mobile phone with Fukumoto's mobile device. First, a POSITA would have recognized that Fukumoto and Erixon are combinable because they are both directed to electromagnetic vibration generation in mobile devices using compact and energy efficient vibrators. *Fukumoto,* Figs. 3, 16, 14:38–15:4, 16:17–37, 50:48–59; *Erixon*, Abstract, Figs. 1, 2, [0002], [0053], [0075], [0099], [0102]; *Wolfe,* ¶257. A POSITA would have been motivated to use Erixon's coil configuration with Fukumoto because doing so would have amounted to nothing

more than simple substitution of a known coil configuration for a linear vibration actuator. *Wolfe,* ¶257; *KSR*, 550 U.S. at 416.

2. Claim 8

Fukumoto discloses this limitation. Section VII.A.6; *Wolfe*, ¶258. If PO argues Fukumoto does not disclose or suggest this limitation, Fukumoto in combination with Erixon teaches it. *Wolfe,* ¶258. Erixon's electromagnetic vibrator includes a housing, coiling, ferrofluid mixture, and permanent magnet assembly "arranged for motion along [a] track." *Erixon,* Abstract, [0011]–[0015], [0037], [0102]. The track is a "tubular cavity" that may be circular or "any other shape." *Id.*, [0059]. Erixon's track teaches a housing that is a linear tube.

In Erixon, voltage is supplied to the coiling via connections 14, creating one magnetic field that interacts with another created by the permanent magnet to create attracting and repelling forces in relation to each other. *Id.*, [0055]–[0057].

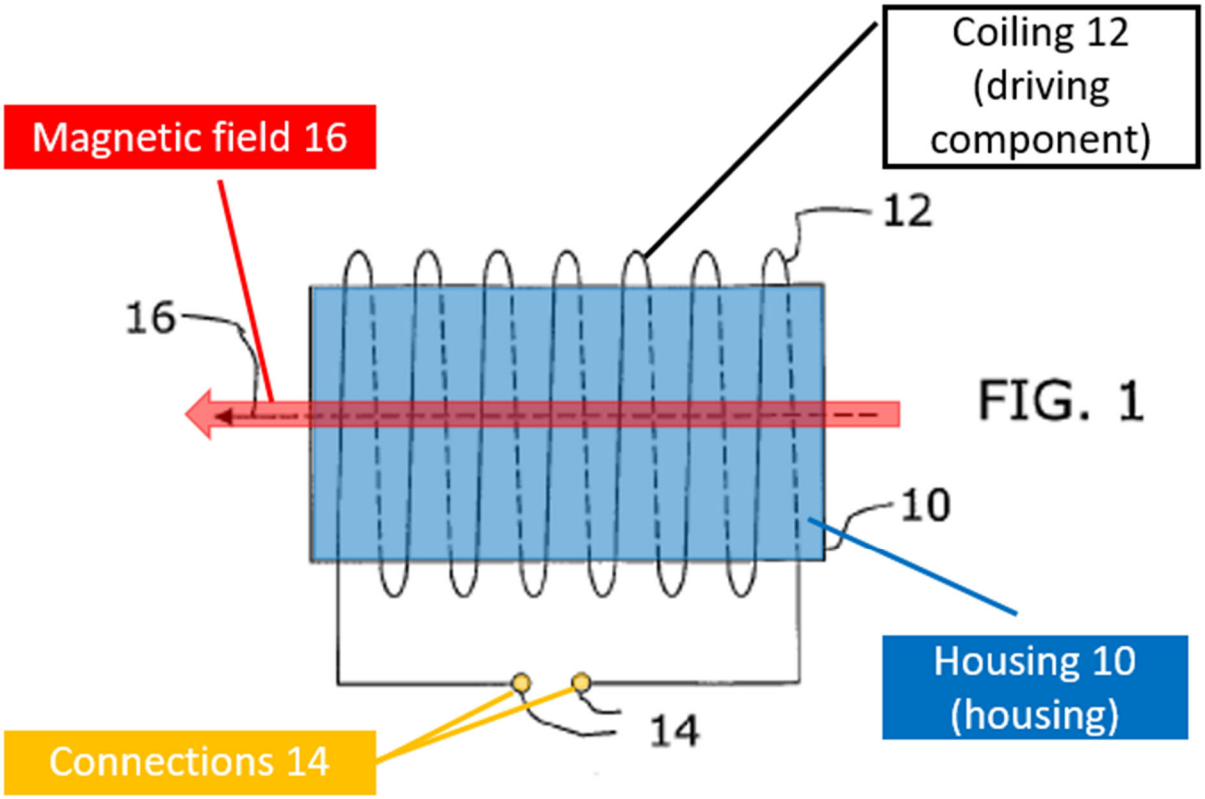

Id., Fig. 1 (annotated).

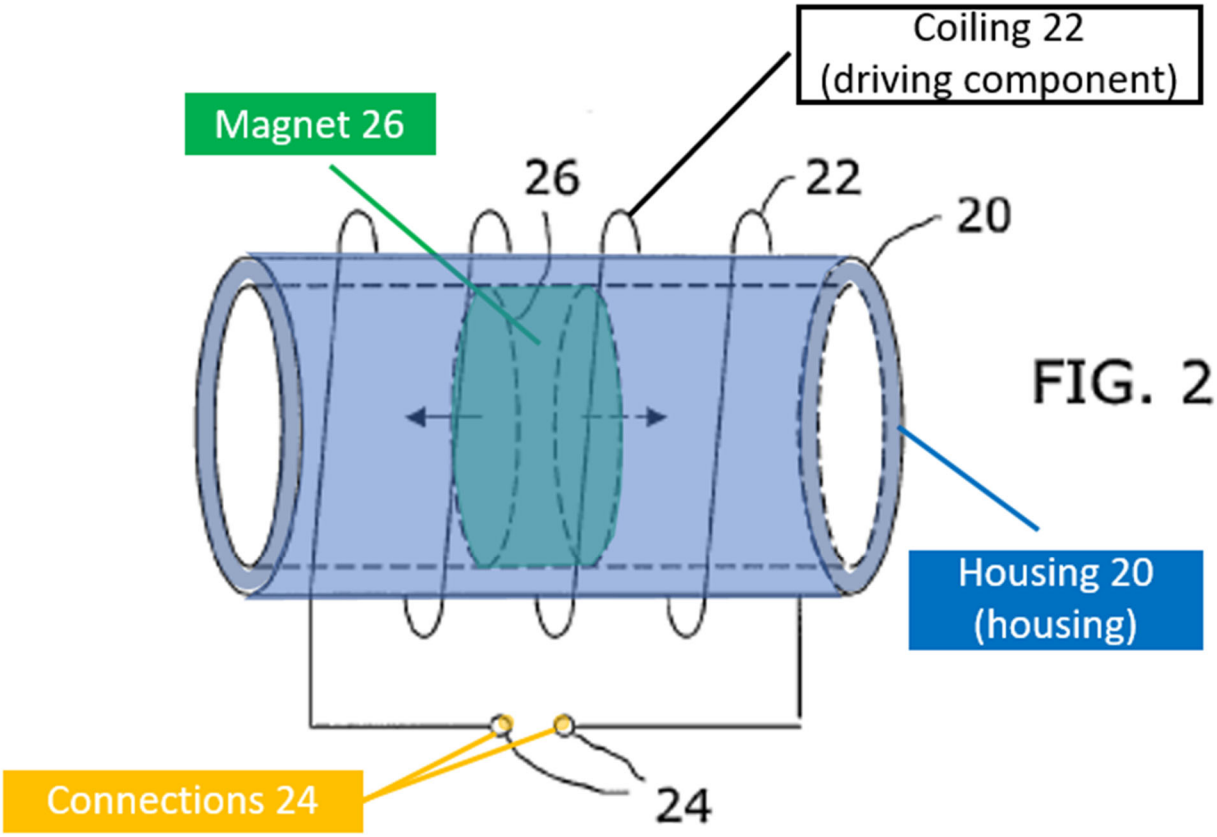

Id., Fig. 2 (annotated). Erixon's coiling ("driving component") is an electromagnetic coil, and its magnet 26 ("moveable component") is a permanent magnet that slides within Erixon's track. *Wolfe,* ¶259.

Erixon discloses an embodiment with centering magnets placed at the ends of a housing to repel a moving magnet.

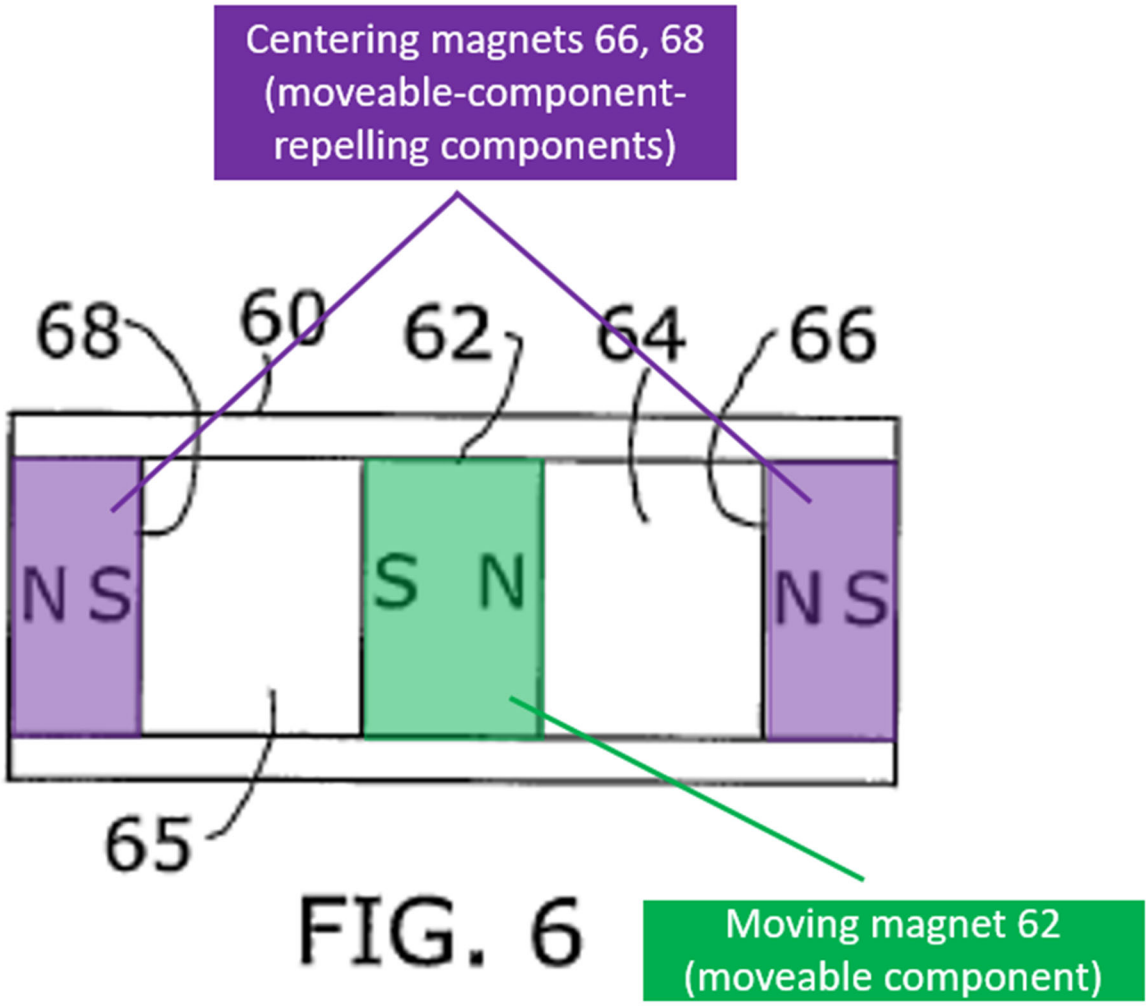

Id., Fig. 6 (annotated), [0091]–[0093]. Erixon's track ("housing") is "capped at both ends by movable-component-repelling components selected from one of mechanical springs and magnets." *Wolfe,* ¶260.

A POSITA would have found it obvious to apply Erixon's teachings of an electromagnetic vibrator for use in a mobile phone with Fukumoto's mobile device. Section VII.E.1. A POSITA would have been motivated to use Erixon's configuration with Fukumoto because doing so would have amounted to nothing

more than simple substitution of known components of a linear vibration actuator. *Wolfe,* ¶¶257, 261; *KSR*, 550 U.S. at 416.

F. Grounds 1J–L: Each of Fukumoto, Fukumoto-Grant, or Fukumoto-Barton and Fuller Renders Obvious Claim 8

Claim 8 would have been obvious over Fukumoto and Fuller. That claim would have also been obvious over Fukumoto-Grant and Fuller or Fukumoto-Barton and Fuller, for the same reasons discussed below. *Wolfe*, ¶¶263–270.

Fukumoto discloses this limitation. Section VII.A.6, *Wolfe*, ¶265. If PO argues Fukumoto does not disclose or suggest this limitation, Fukumoto in combination with Fuller teaches it. *Id*. Fuller discloses a "tubular enclosure," for an electromagnetic vibrator that "has a toroidal movable magnet 20…free to slide in an axial direction 24." *Fuller*, [0027].

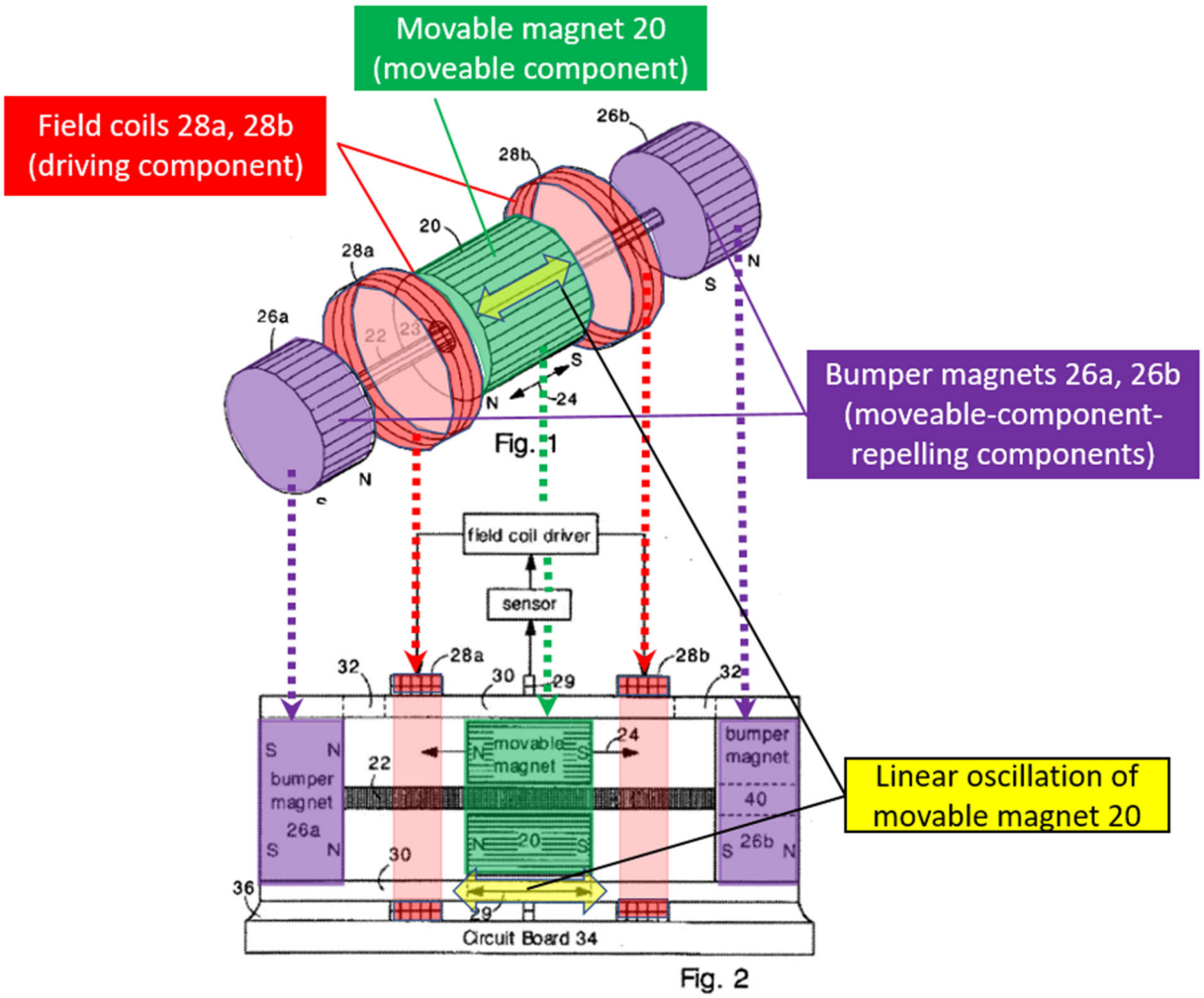

Fuller, Figs. 1, 2 (combined and annotated). Fuller's "tubular enclosure" teaches a housing that is a linear tube, and movable magnet 20 ("moveable component") is a permanent magnet and slides within the tubular enclosure.

Fuller discloses field coils 28a, 28b to drive the movable magnet; "field coils 28 are oriented such that they apply push and pull forces to the movable magnet 20." *Fuller*, Figs. 1, 2, [0027], [0035]. Fuller's field coils ("driving component") are electromagnetic coils.

Fuller discloses "[b]umper magnets 26a 26b are fixedly disposed at opposite

ends," and "are fixed in place," where "bumper magnets 26 are oriented such that they magnetically repel the movable magnet 20." *Id.*, Figs. 1, 2, [0027]. In operation, "the movable magnet 20 oscillates under the influence of the field coils 28, it repeatedly rebounds from the magnetic field of the bumper magnets 26." *Id.*, [0035]. Fuller's tubular enclosure is capped at both ends by bumper magnets 26 ("movable-component-repelling components" which are "magnets").

A POSITA would have found it obvious to apply the teachings of Fuller's electromagnetic vibrator for use in a cell phone to Fukumoto's mobile device. First, a POSITA would have recognized that Fukumoto and Fuller are combinable because they are both directed to electromagnetic vibration generation in mobile devices. *Fukumoto*, Figs. 3, 16, 14:38–15:4, 16:17–37, 50:48–59; *Fuller*, Abstract, Figs. 1, 2, [0004]–[0005], [0026], [0038], [0053]; *Wolfe*, ¶268. Further, a POSITA would have been motivated to use Fuller's configuration with Fukumoto because doing so would have amounted to nothing more than simple substitution of known components of a linear vibration actuator. *Wolfe*, ¶268; *KSR*, 550 U.S. at 416.

G. Grounds 1M–O: Each of Fukumoto, Fukumoto-Grant, or Fukumoto-Barton and Dong-Ogusu Renders Obvious Claims 14 and 19

Claims 14 and 19 would have been obvious over Fukumoto, Dong, and Ogusu. These claims would have also been obvious over Dong and Ogusu in

combination with Fukumoto-Grant or Fukumoto-Barton, for the same reasons discussed below. *Wolfe*, ¶¶271–279.

1. Dong's Prior Art Status

Dong was published on July 22, 2009. Dong qualifies as prior art for claims 14 and 19 because those claims are entitled to a priority date no earlier than January 6, 2012. In the '830 patent, Figures 24A, 24B, and 25 as well as their associated description (*'830Pat.*, 14:3–58) appear to be the only potential written description support for claims 14 and 19. In the '830 patent's priority chain, these figures and associated description were not present in the May 18, 2009 provisional or May 18, 2010 non-provisional; instead, they first appeared in the January 6, 2012 continuation-in-part application. *Wolfe,* ¶271; EX1026. Claims 14 and 19 have a priority date no earlier than January 6, 2012, and Dong qualifies as prior art to claims 14 and 19.

2. Claims 14 and 19

As context for the additional limitation of claims 14 and 19, the '830 patent explains: "Free air can be considered to be analogous to a resistor in an electric circuit and increases the resistance, or magnetic reluctance, of a magnetic circuit and reduces and [sic] the flux of the magnetic field." *'830Pat.*, 14:7–10. The '830 patent explains that "paramagnetic materials" can be introduced to "provide a lower-resistance path for magnetic flux." *Id.*, 14:13–19.

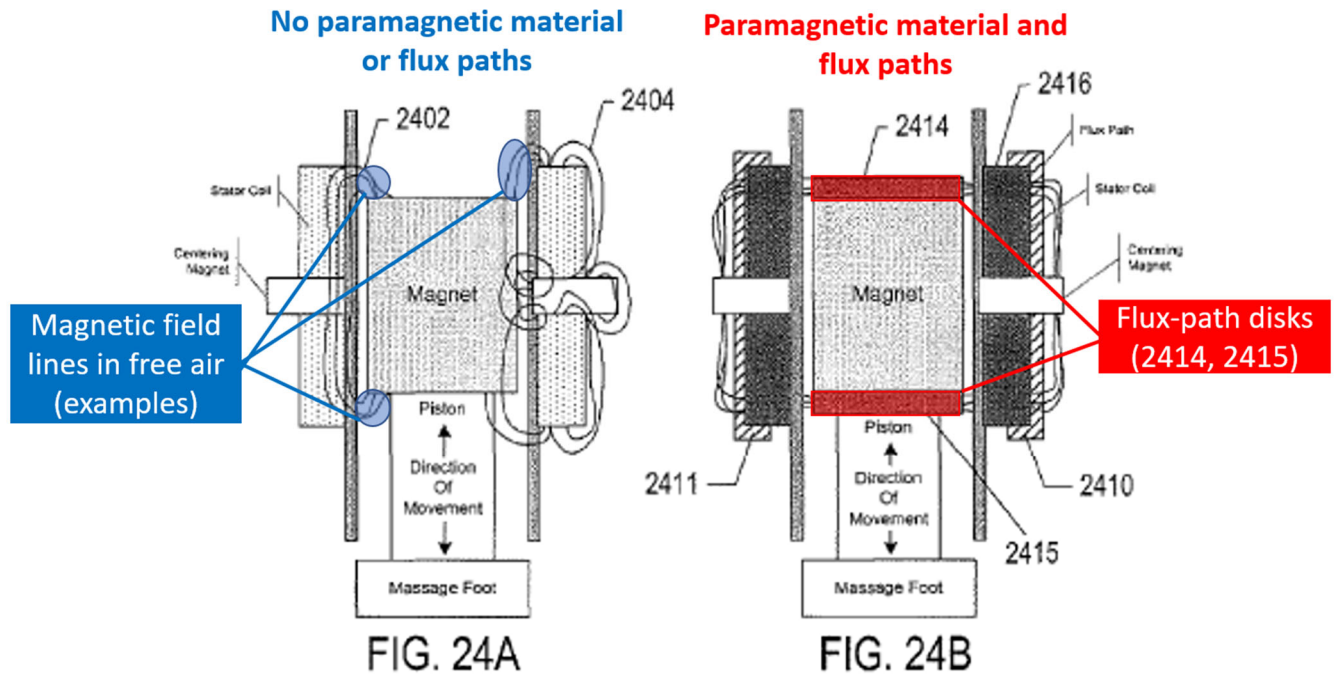

Id., Figs. 24A–B (annotated), 13:52–67. In the '830 patent, paramagnetic flux paths are introduced to the LVM by including paramagnetic materials that "decrease the portion of magnetic field lines passing through free air," therefore providing "a more efficient linear vibration module." *Id.*, 14:20–35.

Claim 19 recites the same limitations as claim 1 along with dependent claim 14's additional limitations. Fukumoto in combination with Dong and Ogusu discloses or suggests the additional limitations. *Wolfe,* ¶272. In the combination, paramagnetic materials would be incorporated into Fukumoto's vibration actuator to reduce the reluctance of one or more magnetic circuits based on the teachings of Dong and Ogusu. A POSITA would have recognized paramagnetic materials could be configured in numerous ways in Fukumoto's vibration actuator to decrease reluctance of the magnetic circuits created during operation, and a POSITA would

have been motivated to do so because decreasing reluctance would increase efficiency (i.e., greater vibrational force using less power). *Id.,* ¶273.

Paramagnetic materials were well known at the relevant time, and tungsten was known as a paramagnetic material. *Id.,* ¶274. Dong discloses its counterweight 15 can be composed of tungsten (*Dong*, 6), and a POSITA would have understood that adding a paramagnetic material (e.g., tungsten) to Fukumoto's vibration module (as taught in Dong) would reduce reluctance of the magnetic circuits in Fukumoto's vibration actuator. *Wolfe*, ¶274.

A POSITA would have been motivated to apply Dong's teaching to Fukumoto's vibration actuator for better efficiency of the magnetic circuit in the vibration module. *Id.*, ¶275. Such a modification would have required only minor changes to Fukumoto's disclosed structure, and a POSITA would have had a reasonable expectation of success in making them. *Id.*

Ogusu's teachings further support the modification discussed above. In, Ogusu, a yoke made of ferromagnetic material or non-ferromagnetic materials mixed with ferromagnetic powders is positioned between the electromagnetic coil and permanent magnet to form a magnetic circuit. *Ogusu*, [0028]–[0029], [0038], Fig. 1; *Wolfe*, ¶276. A POSITA would have recognized that non-magnetic materials mixed with ferromagnetic powders, as disclosed in Ogusu, would have weak magnetic attraction similar to paramagnetic materials and would reduce the

reluctance of magnetic circuits in the same way. *Wolfe*, ¶276; *'830Pat.*, 14:10–19 ("[p]aramagnetic materials…reduce the reluctance of a magnetic circuit and can therefore allow a magnetic field to more efficiently perform more work"); *Ogusu*, [0047] ("each yoke forms the magnetic loop having the shortest path"). Ogusu further supports that a POSITA would have been motivated to incorporate known paramagnetic materials into Fukumoto's oscillatory actuator to reduce the reluctance of the magnetic circuits to improve efficiency. *Wolfe*, ¶¶276–277.

H. Grounds 1P–R: Each of Fukumoto, Fukumoto-Grant, or Fukumoto-Barton and Saiki Renders Obvious Claims 15 and 20

Claim 20 recites the same limitations as claim 1 along with dependent claim 15's additional limitation. Claims 15 and 20 would have been obvious over Fukumoto and Saiki. Those claims would have also been obvious over Fukumoto-Grant and Saiki or Fukumoto-Barton and Saiki, for the same reasons discussed below. *Wolfe*, ¶¶280–286.

If PO argues Fukumoto does not disclose or suggest claim 15's additional limitation, Fukumoto in combination with Saiki teaches it. Saiki relates to a driving circuit in a portable telephone or pager that outputs two signals of two different frequencies. *Saiki*, 1:9–13, 2:10–36. Saiki discloses an electric signal generator that generates a synthesized vibration output waveform by combining eight point frequencies (P1-P8) such that those frequencies are either in phase or in reverse phase with each other. *Id.*, 14:47–15:5, 15:24–37. The resulting vibration output

waveform in Saiki's Figure 17B is substantially similar to the complex vibration mode in the '830 patent's Figure 22B.

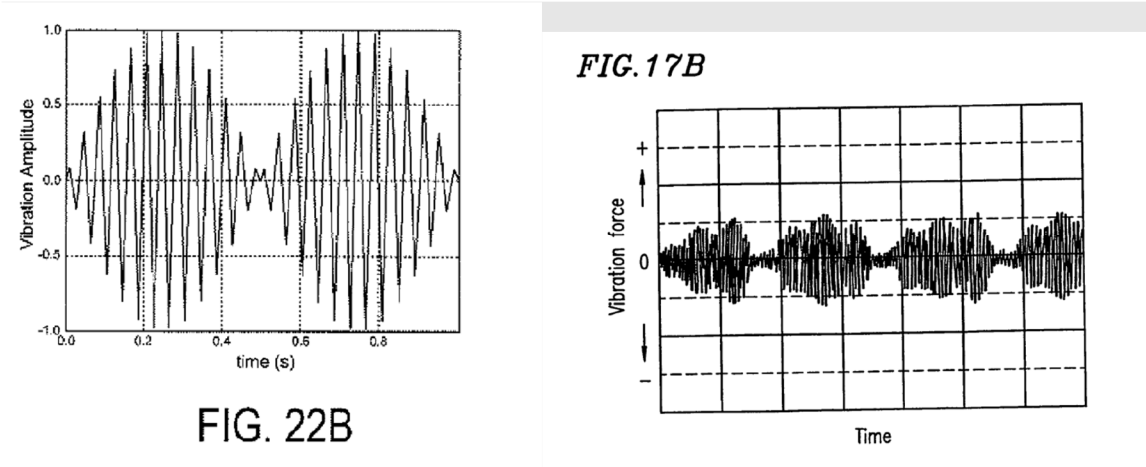

'830Pat., Fig. 22B; *Saiki*, Fig. 17B; *Wolfe,* ¶282.

A POSITA would have found it obvious to implement Saiki's complex vibration modes in Fukumoto's mobile device. *Wolfe*, ¶280. First, a POSITA would have recognized that Fukumoto and Saiki are combinable because they are both directed to electromagnetic vibration generation in mobile devices. *Fukumoto,* Figs. 3, 16, 14:38–15:4, 16:17–37, 50:48–59; *Saiki*, Abstract, Figs. 2, 3B, 1:9–13, 8:58–9:28; *Wolfe,* ¶280. Further, a POSITA would have recognized that the proposed combination would have amounted to no more than applying a known technique (Saiki's frequency signal synthesis) to a known device ready for improvement (Fukumoto's mobile device including its linear oscillatory actuator and drive signal generation circuit) to yield predictable results (creating additional vibration output options). *Wolfe,* ¶280; *KSR*, 550 U.S. at 417. Additionally, a POSITA would have

been motivated to make this combination to allow for greater flexibility and variety of available vibration waveforms. *Saiki*, 15:20–23, 15:46–60; *Wolfe,* ¶280.

I. Grounds 1S–U: Each of Fukumoto, Fukumoto-Grant, or Fukumoto-Barton and Saiki-Masahiko Renders Obvious Claim 16

Claim 16 would have been obvious over Fukumoto, Saiki, and Masahiko. That claim would have also been obvious over Saiki and Masahiko in combination with Fukumoto-Grant or Fukumoto-Barton, for the same reasons discussed below. *Wolfe*, ¶¶287–300.

1. Masahiko's Prior Art Status

Masahiko was filed on July 26, 2011. Masahiko qualifies as prior art for claim 16 because that claim is entitled to a priority date no earlier than January 6, 2012. In the '830 patent, Figures 22B and 23 and the description at 13:34–59 appear to be the only possible written description support for claim 16. In the '830 patent's priority chain, this figure and associated description were not present in the May 18, 2009 provisional or May 18, 2010 non-provisional; instead, they first appeared in the January 6, 2012 continuation-in-part application. *Wolfe*, ¶287; EX1026. Claim 16's priority date is no earlier than January 6, 2012, and Masahiko qualifies as prior art for claim 16.

2. Claim 16[17]

The combination of Fukumoto, Saiki, and Masahiko teaches claim 16's additional limitations. First, Saiki teaches or suggests "a primary oscillation frequency modulated by a modulating oscillation frequency." In Saiki's Figures 17A, 17B, a POSITA would have understood that P1 teaches the "primary oscillation frequency," and P2 teaches a "modulating oscillation frequency." *Wolfe,* ¶292. Additionally, a POSITA would have understood that P1 is modulated by P2 because P1 is in reverse phase with P2. *Saiki*, 15:24–37; *Wolfe,* ¶292. A POSITA would have been motivated to use Saiki's complex vibration modes with Fukumoto. Section VII.H; *Wolfe,* ¶292.

Second, Masahiko teaches a "beat frequency." In Masahiko, the beat vibration or f_B is a beat frequency. *Masahiko*, 12:55–56 ("Conversely, when f_d<f, for example, when f=196.25 Hz at f_o=157 Hz, the beat vibration f_B is 39.25 Hz."), Fig. 5; *Wolfe,* ¶293.

Third, Masahiko teaches "an aperiodic oscillation waveform." Masahiko discloses changing "period spikes" in the total energy of a system driven by a pure sine wave that eventually reaches steady state, but other bipolar, square-based waves used as drive signals continue to change the excitation and dampening phases to

[17] Petitioners reserve the right to challenge claim 16 under §112 in other proceedings.

change in a non-repetitive, gradual manner. *Masahiko*, Fig. 6, 14:26–53, Figs. 15, 16, 22:56–23:59; *Wolfe,* ¶296.

A POSITA would have found it obvious to implement Masahiko's beat vibration and aperiodic complex vibration modes in Fukumoto's mobile device. *Wolfe*, ¶288. First, a POSITA would have recognized that the Fukumoto-Saiki combination and Masahiko are combinable because all are directed to electromagnetic vibration generation in mobile devices. *Fukumoto,* 14:38–15:4, 16:29–33, 50:48–59; *Saiki*, Abstract, 1:9-13, 8:58–9:28; *Masahiko*, 1:17–21, 8:50–10:61; *Wolfe,* ¶281. Further, a POSITA would have recognized the proposed combination would have amounted to no more than applying a known technique (Masahiko's beat frequency and aperiodic oscillation) to a known device ready for improvement (the Fukumoto-Saiki combination's mobile device including a linear oscillatory actuator) to yield predictable results (a linear oscillatory actuator that generates a beat wave frequency to stop voltage application—and thereby vibration generation—abruptly, as well as an aperiodic waveform). *Wolfe,* ¶288; *KSR*, 550 U.S. at 417. Additionally, a POSITA would have been motivated to use Masahiko's particular beat and aperiodic waveforms with the Fukumoto-Saiki combination's drive circuit to allow for more abrupt start and stop to the vibrations as a predictable improvement in the "tactile haptic effects" experienced by a user of a mobile device. *Masahiko,* 2:13–47, 4:40–46, 10:7–10, 12:55–61; *Wolfe,* ¶288.

A POSITA would have had a reasonable expectation of success in making the proposed modification. *Wolfe,* ¶289. To do so, a POSITA would have only needed to make minor software modifications to allow for the different complex vibration waveforms in the Fukumoto-Saiki combination, which would have been within the skill level of a POSITA at the relevant time. *Id.*

J. Grounds 2A–C: Ogusu and Each of Fukumoto, Fukumoto-Grant, and Fukumoto-Barton Renders Obvious Claims 1, 2, 7, 11, 15, 17, and 20

Claims 1, 2, 7, 11, 15, 17, and 20 would have been obvious over Ogusu and Fukumoto. Those claims would have also been obvious over Ogusu, Fukumoto, and Grant; and Ogusu, Fukumoto, and Barton, for the same reasons discussed below. *Wolfe*, ¶¶301–336.

1. Ogusu

Ogusu relates to a "moving magnet-type vibration actuator," e.g., in pagers. *Ogusu,* [0001]–[0004], [0059]. Ogusu's Figures 1-3 are reproduced below, with Figure 2 being the front view of Ogusu's vibration actuator, Figure 1 showing cross-sectional view A-A, and Figure 3 showing cross-sectional view B-B.

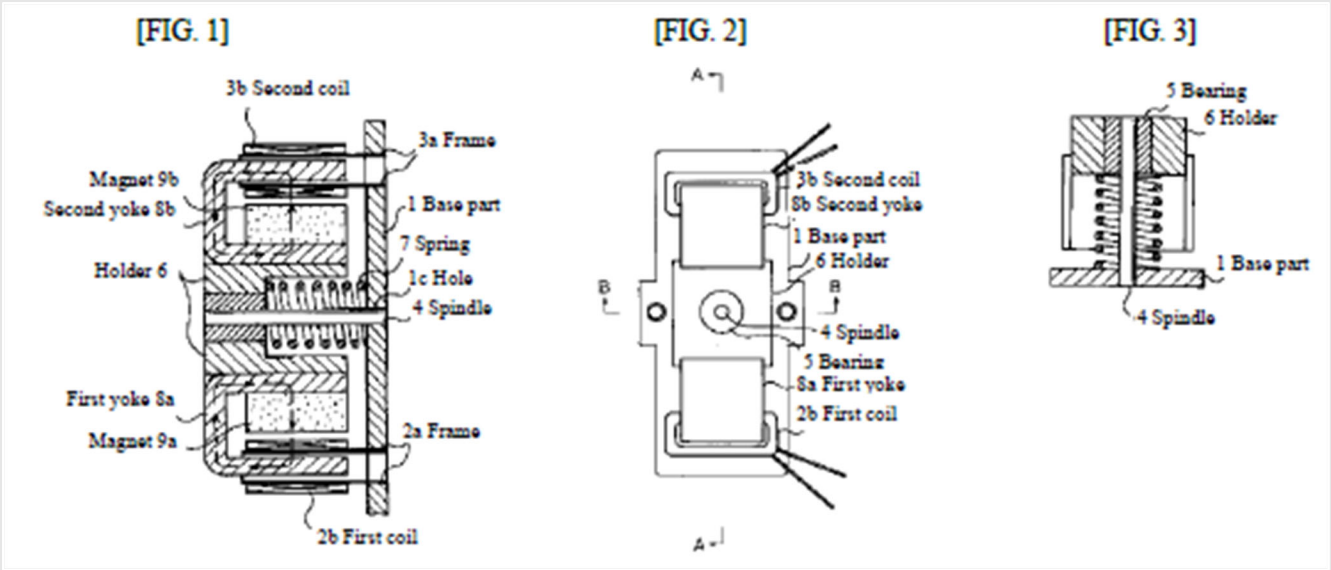

In Figures 1-3, Ogusu depicts moving component including holder 6; bearing 5; yokes 8a, 8b; magnets 9a, 9b that slides along spindle 4 when magnets 9a, 9b are driven by coils 2a, 2b. *Id.,* Fig. 1, [0023]–[0030]. In Ogusu, "[w]hen a current in a predetermined direction is sent to the first coil 2b and the second coil 3b, thrust is generated according to Fleming's left-hand rule in the first coil 2b and second coil 3b arranged in the magnetic circuit described above. Then, as a reaction to the thrust, the movable elements…try to move." *Id.*, [0031]–[0032]. "[W]hen an alternating current is sent to the first coil 2b and the second coil 3b, the movable elements generate vibration according to a current waveform." *Id.*

Ogusu's magnet and yoke are "suitable for generating various sounds and vibrations by changing the frequency and an amplitude thereof, or by intermittently generating an electric current, and the like." *Id.*, [0036]. Ogusu's vibration actuator generates several types of waveforms:

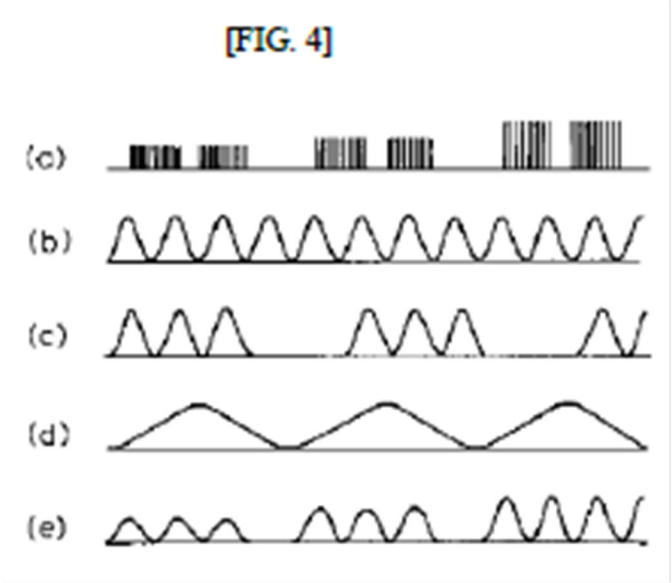

Id., Figs. 4(a)–(d), [0037]–[0042]. In Ogusu, "various vibrations can be switched at the user's choice by a selection in the pager's control unit." *Id.*, [0043].

2. Combination of Ogusu with Fukumoto

A POSITA would have been motivated to combine Ogusu's and Fukumoto's teachings. First, a POSITA would have recognized that Ogusu and Fukumoto are compatible because they are both directed to linear vibration generation in mobile devices. *Wolfe,* ¶301; *Ogusu*, [0001]–[0002]; *Fukumoto,* Abstract, 37:5–12, Fig. 81. Further, a POSITA would have recognized Ogusu lacks certain implementation details that were well known as shown in Fukumoto and would have been motivated to apply those implementation details to Ogusu as discussed below. *Wolfe,* ¶301.

3. Claim 1

a. **1[pre]**

To the extent the preamble is limiting, Ogusu discloses or suggests it. *Wolfe,*

¶302. Ogusu discloses a "vibration actuator" using a moving magnet. *Ogusu*, [0001]–[0002]; *Wolfe*, ¶302. Ogusu's vibration actuator is linear in the same way as the '830 patent. *Ogusu,* Figs. 1, 4, [0031]–[0032]; *'830Pat.*, 2:17-23. Additionally, as discussed below, Ogusu's controller and vibrating device are contained in the same overall module. *Wolfe,* ¶302.

b. **1[a]**

Ogusu in combination with Fukumoto discloses or suggests this limitation. *Wolfe,* ¶¶303–304. Ogusu's vibration actuator is used as a "vibration generating means for pager[s]." Ogusu, [0002]. Ogusu does not explicitly depict a housing for its vibration actuator. Nevertheless, a POSITA would have found it obvious and beneficial to enclose Ogusu's vibration actuator in a housing to protect the components of the vibration actuator during pager assembly. *Wolfe,* ¶304.

Fukumoto is directed to a vibration actuator for use in portable electronic devices that includes case 115a ("a housing"), or alternatively main case 101 ("a housing" under PO's district court infringement contentions (EX1028, 1–5)). *Fukumoto*, Figs. 1, 3, 1:13–19, 1:45–50, 13:20–26. For the reasons discussed above, a POSITA been motivated to modify Ogusu's vibration actuator to include a "housing," as taught in Fukumoto. *Wolfe,* ¶304.

c. **1[b]**

Ogusu discloses or suggests this limitation under non-MPF or MPF. *Wolfe*,

¶¶305–307. For either, Ogusu discloses a "movable element" comprising holder 6; bearing 5; yokes 8a, 8b; magnets 9a, 9b:

[FIG. 1]

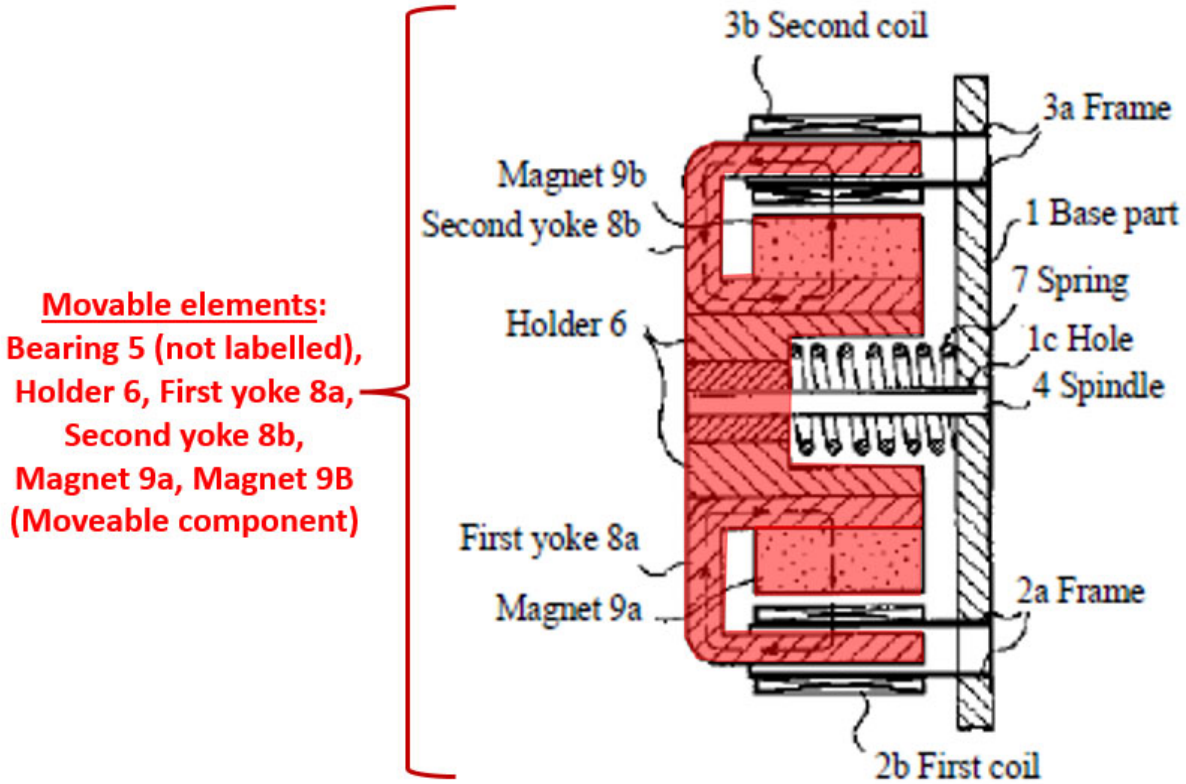

Id., Fig. 1 (annotated), [0031]–[0032]. Ogusu's moveable element discloses or suggests a "moveable component" (i.e., a moving weight that performs the recited function ("moves")). Section VI.A.1.

d. **1[c]**

Ogusu discloses or suggests this limitation. *Wolfe,* ¶308. Ogusu discloses "a current in a predetermined direction is sent to the first coil 2b and the second coil 3b" to produce the coils' magnetic fluxes parallel to the moving direction of the

"thrust" created in a "magnetic circuit" upon the movable element, or "mover," which moves in that resultant direction. *Ogusu*, [0030]–[0031]. Ogusu also discloses "an input power supplied to the coil." *Id*., [0057]–[0058]. A POSITA would have recognized that applying electrical current to the coils to create resultant movement requires a supply of electric power. *Wolfe*, ¶308.

e. **1[d]**

Ogusu alone or in combination with Fukumoto discloses or suggests this limitation. *Wolfe,* ¶¶309–311. Ogusu discloses that "various vibrations can be switched by the selection of the pager control section by the user's selection." *Ogusu*, [0043]. A POSITA would have recognized that "the user's selection" in Ogusu teaches "user input features" because a POSITA would have understood and found it obvious that a user would make a selection through a user input feature. *Wolfe*, ¶309.

Fukumoto discloses a PDA with a "touch panel" and "push-button type operation keys" for a user to "input[] operation instructions to the PDA 101." *Fukumoto*, 13:40–14:13, Figs. 1, 2. Fukumoto's touch panel and push button keys disclose or suggest "user-input features." A POSITA would have been motivated to incorporate user input features such as Fukumoto's into Ogusu's pager to allow the user to make selections in Ogusu's "pager control section." *Wolfe*, ¶310. Ogusu alone or in combination with Fukumoto discloses or suggests "user input features."

Id.

f. **1[e]**

Ogusu in combination with Fukumoto discloses or suggests this limitation under non-MPF or MPF. *Wolfe*, ¶¶312–315. For either, Ogusu's first and second coils 2b, 3b drive the "movable element" in each of two opposite directions as the result of applied current. *Ogusu*, [0031]–[0032].

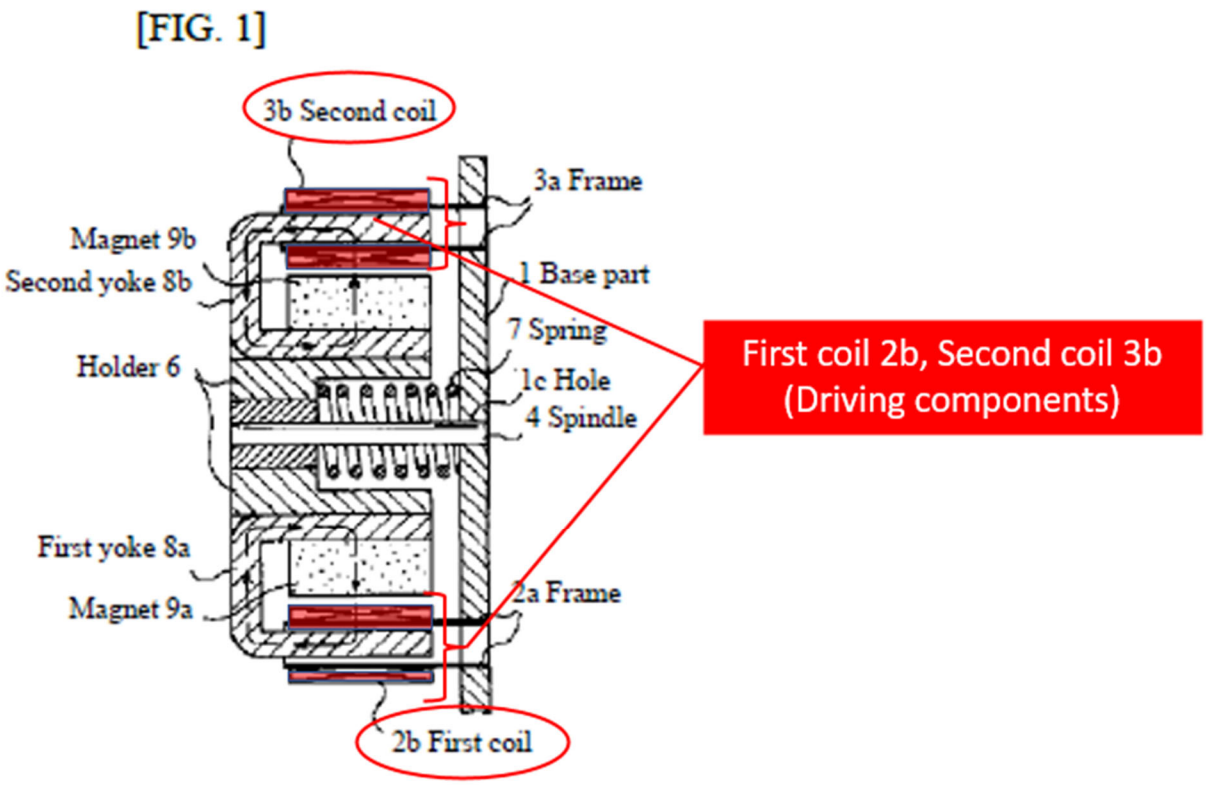

Id., Fig. 1 (annotated). The force applied to the movable element is generated by supplying "alternating current" according to a "waveform of the current":

[FIG. 4]

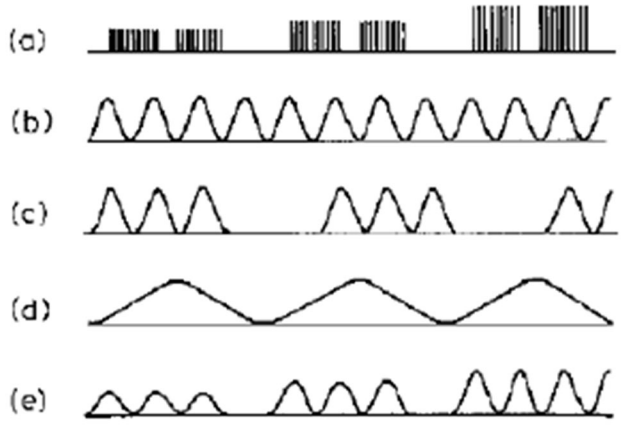

Id., Fig. 4. A POSITA would have recognized or found it obvious that applying such waveforms to the coils pushes the mover in one direction and then "pulls" that element in the opposite direction. *Wolfe*, ¶312.

Ogusu discloses or suggests coils 2b, 3b ("driving component") that create thrust causing the moveable element to move when current is applied in each of two directions ("drives the moveable component in each of two opposite directions"), and in the combination with Fukumoto, that movement would occur "within the housing" (i.e., a coil of conductive wire that performs the recited function). *Wolfe,* ¶¶313–314.

g. **1[f]**

Ogusu discloses or suggests this limitation under non-MPF, and Ogusu in combination with Fukumoto teaches this limitation under MPF. *Wolfe*, ¶¶316–322.

For non-MPF, Ogusu discloses a "pager control section" from which a user makes a selection to switch between "various vibrations." *Ogusu,* [0043]. In Ogusu, vibrations are the result of applying different currents to the coils according to different waveforms. Section VII.J.3.f; *Wolfe,* ¶317. These different waveforms each have different amplitudes and different frequencies:

[FIG. 4]

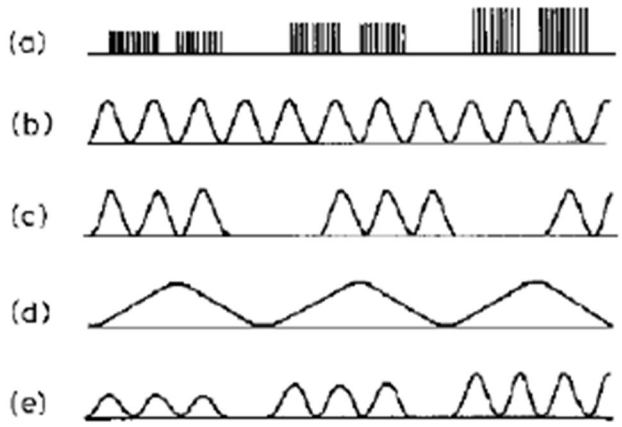

Ogusu, Fig. 4, [0017], [0019], [0032], [0037]–[0042], [0055]; *Wolfe,* ¶310. Ogusu's vibration actuator is "capable of generating vibration at an arbitrary frequency and amplitude" using such waveforms. *Ogusu,* Abstract, [0011]. Ogusu discloses applying alternating current to its two coils ("controls supply of power from the power supply to the driving component") according to a waveform of a specific amplitude and frequency which can be chosen from a user selection ("to cause the moveable component to oscillate at a frequency and an amplitude" selected by a user via "stored value") from an available pager control section ("stored values"). *Wolfe,*

¶¶317–318.

For MPF, Ogusu discloses or suggests the recited function for the reasons discussed above. Although Ogusu does not explicitly disclose the corresponding structure (Section VI.A.3), a POSITA would have understood Ogusu uses a processor to choose among the various possible waveforms and to control the supply of power from the power supply to the coils to achieve those waveforms. *Wolfe*, ¶312. Such a processor is disclosed in Fukumoto (CPU 113). Additionally, for similar reasons as Fukumoto (Section VII.A.2.g), a POSITA would have recognized that Ogusu uses an H-bridge switch or other equivalent structure to convert power supplied from a battery to the selected waveform. *Wolfe*, ¶¶319–321. Finally, a POSITA would have found it obvious to use an algorithm such as that disclosed in Fukumoto to supply power according to the desired waveform in Ogusu. *Id.* Fukumoto's algorithm is discussed in Section VII.A.2.g. *Id.*

4. Claim 2

Ogusu in combination with Fukumoto teaches claim 2's additional limitations. *Wolfe,* ¶¶323–326. In Ogusu, a user selects a vibration in the pager control section, and that vibration corresponds to a waveform with a specific amplitude and frequency which is then applied to the coils. Section VII.J.3.g; *Wolfe*, ¶323.

Additionally, Fukumoto discloses a user's input starts a sequence of CPU-

driven events that results in vibration of certain amplitude and frequency. Section VII.A.2.g. Fukumoto's CPU-controlled vibration generation is depicted in at least Figures 2 and 5:

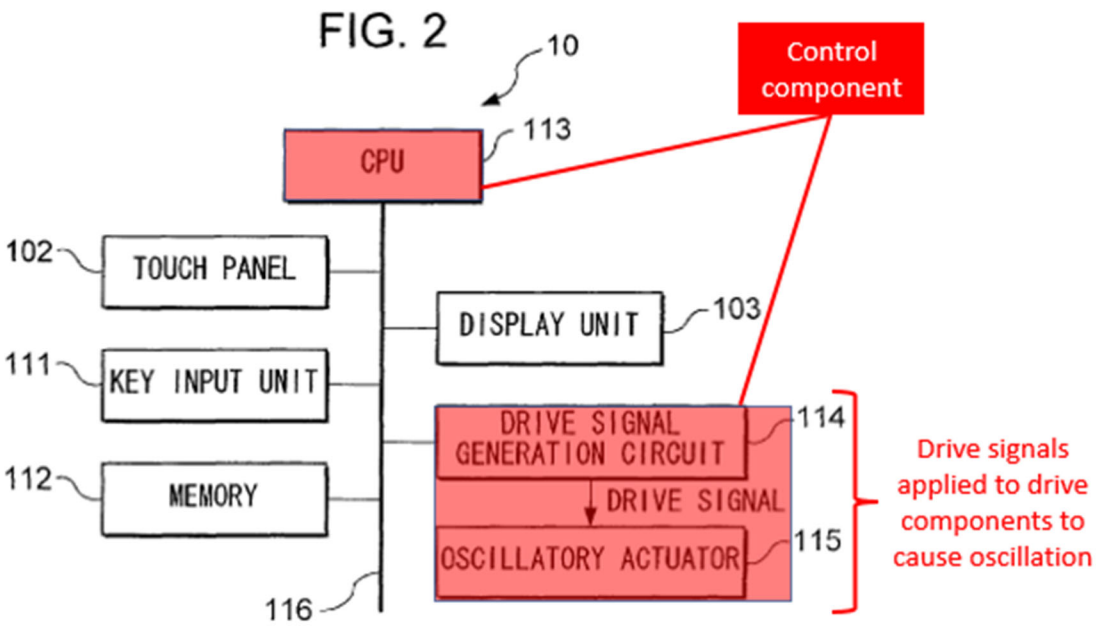

Id., Fig. 2 (annotated to show CPU-managed circuitry).

FIG. 5

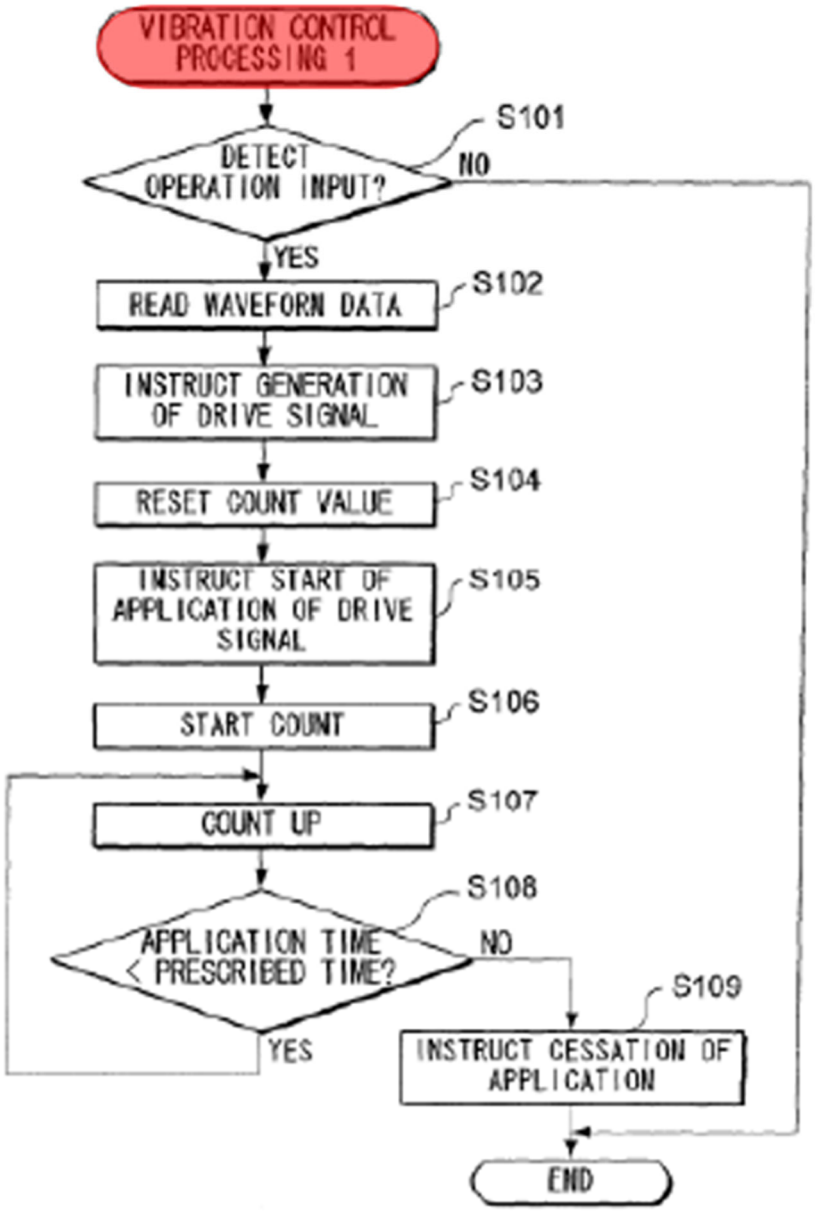

Id., Fig. 5 (annotated).

Applying Fukumoto's implementation details to Ogusu would have amounted to no more than applying a known technique (Fukumoto's CPU-controlled PDA vibration generation process) to a known device ready for improvement (Ogusu's

pager control section vibration selection and generation process) to yield predictable results (a CPU-managed vibration generation process in Ogusu's pager providing a desired vibration output with a specific amplitude and frequency corresponding to a user input). *Wolfe,* ¶325.

5. Claim 7

Ogusu discloses or suggests claim 7's additional limitation. *Wolfe,* ¶¶327–328. Ogusu discloses a driving component (Section VI.A.1). Ogusu discloses applying a current "in a predetermined direction" to the first and second coils to produce a "thrust" that moves the "mover" parallel to that generated thrust. *Ogusu,* [0031]–[0032]; *Wolfe,* ¶328. Ogusu discloses or suggests coils 2b, 3b ("driving component comprises one or more electromagnetic coils") generate magnetic fields that are parallel to the direction in which the moveable component is being driven. *Wolfe,* ¶328.

6. Claim 11

Ogusu discloses or suggests claim 11's additional limitations. Ogusu discloses "first coil 2b and the second coil 3b." *Ogusu,* [0031]–[0032].

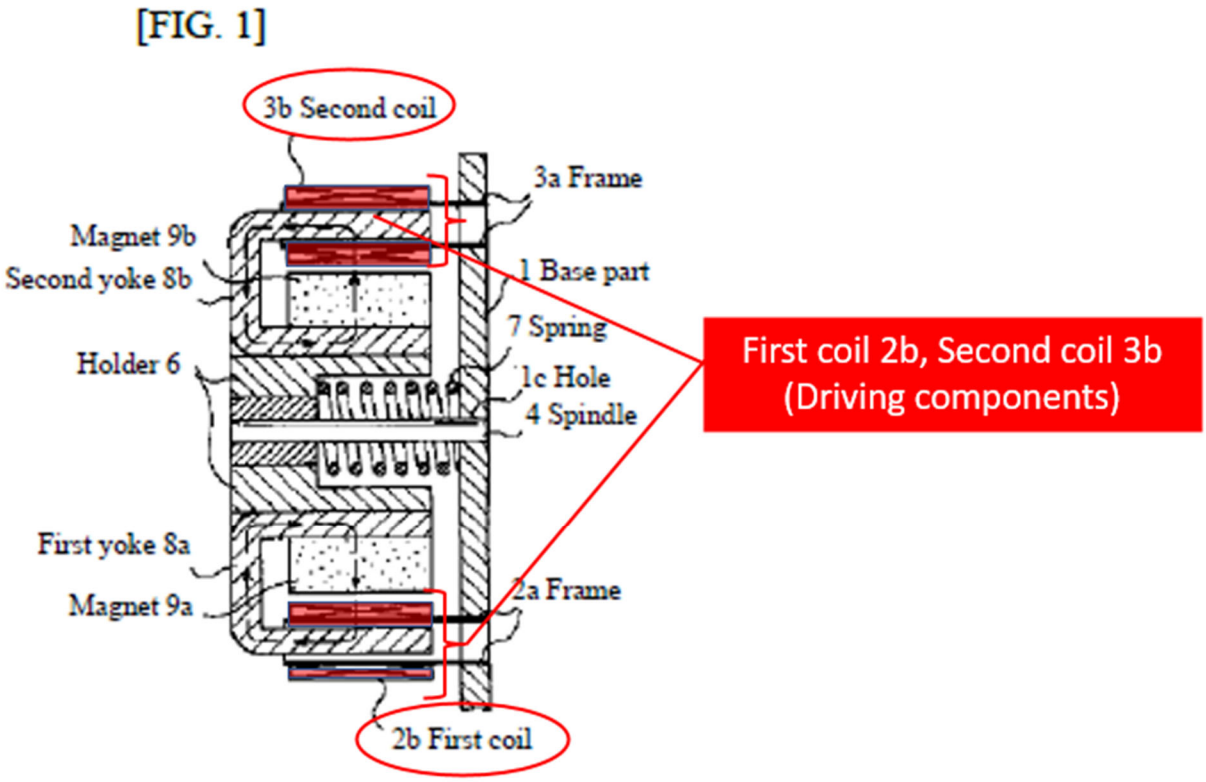

Id., Fig. 1 (annotated). A POSITA would have understood and found it obvious that Ogusu's vibration actuator applies electric current in a particular waveform with respective amplitude to each of the first and second coil, causing the movable element to vibrate according to that amplitude. *Id.*, [0036]–[0037]; *Wolfe,* ¶329. Ogusu includes coils 2b, 3b ("two or more driving components") and activates those coils according to the chosen waveform ("each, when activated, driving the moveable component to linearly oscillate with an amplitude particular to the driving component"). *Wolfe,* ¶329.

7. Claims 15, 20

Claim 20 recites the same limitations as claim 1 along with dependent claim

15's additional limitation. Ogusu discloses or suggests this additional limitation. *Wolfe,* ¶¶330–331. In Ogusu, the mover vibrates as the result of applying different currents to the coils according to different waveforms. Sections VII.J.3.f–VII.J.3.g; *Wolfe,* ¶330. These different waveforms each have different frequencies:

[FIG. 4]

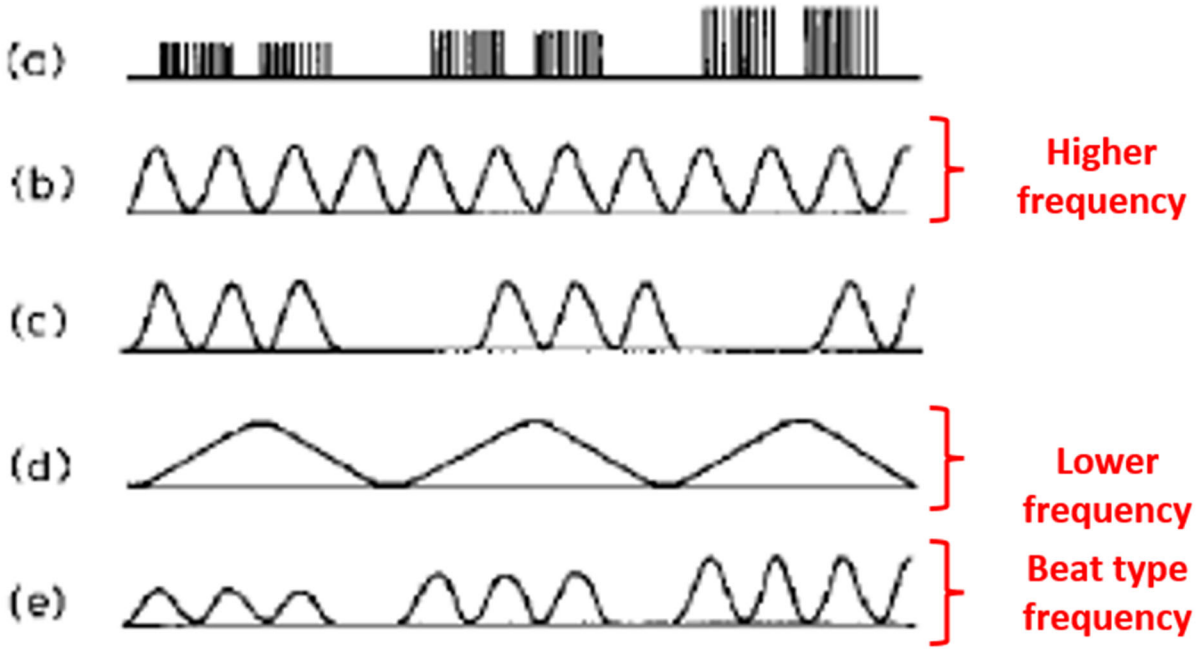

Id., Fig. 4 (annotated), [0032], [0037]–[0041]; *Wolfe,* ¶323. Ogusu discloses "combin[ing] sound and vibration by superimposing the current waveform in Fig. 4(a) and the current waveforms in Fig. 4(b) onwards." *Id.*, [0042].

[FIG. 4]

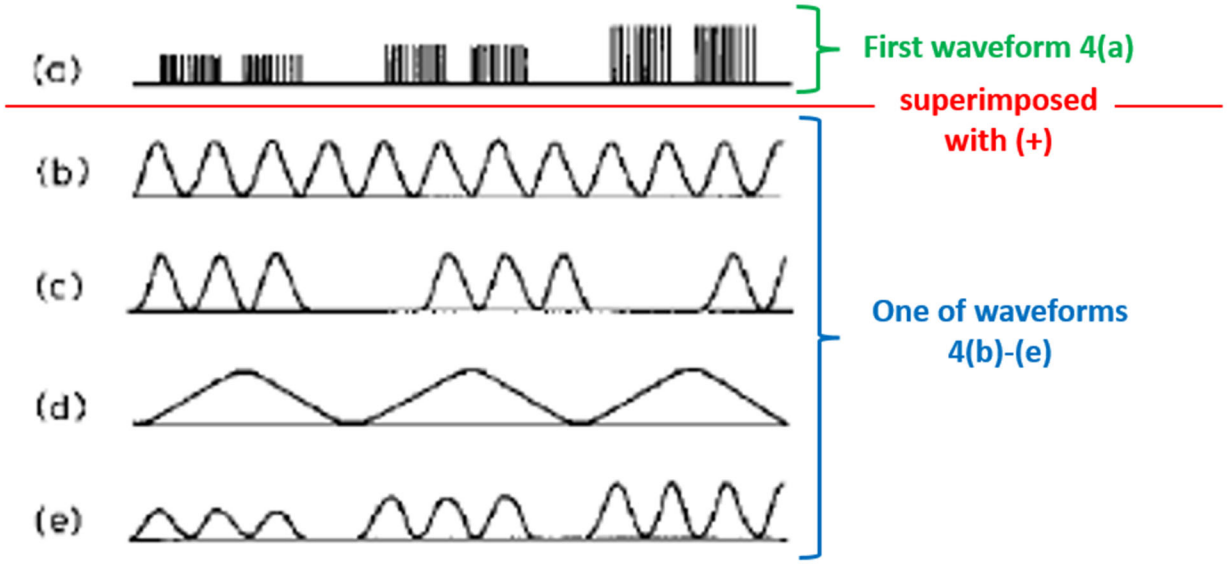

Id., Fig. 4 (annotated). A POSITA would have recognized the combination of these two waveforms into one would create a complex vibration mode driving Ogusu's moveable component at the plurality of different frequencies. *Wolfe,* ¶331.

8. Claim 17

Ogusu alone or in combination with Fukumoto teaches claim 17's additional limitations. *Wolfe,* ¶¶332–334. In Ogusu, a user selects a vibration in the pager control section, and that vibration corresponds to a waveform with a specific amplitude and frequency which is then applied to the coils. Section VII.J.3.g; *Ogusu,* [0032], [0055].

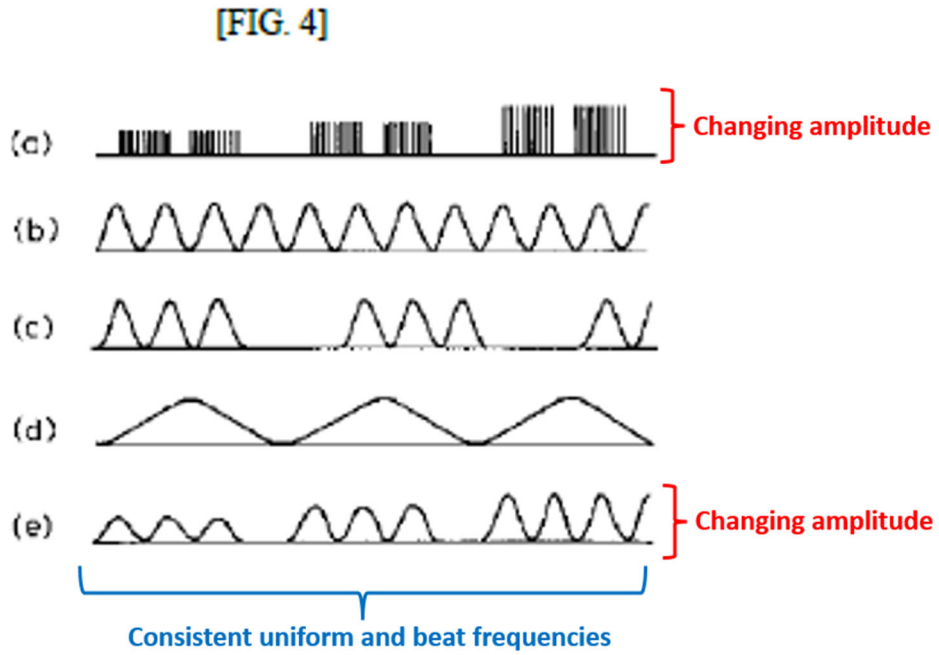

Id., Fig. 4 (annotated); *Wolfe,* ¶332.

Additionally, Fukumoto correlates a user input to a desired waveform, converts that waveform to a drive signal, and applies that drive signal to its oscillatory actuator. Section VII.A.2.g. Applying Fukumoto's implementation details to Ogusu would have amounted to no more than applying a known technique (Fukumoto's process for converting a user input to a drive signal) to a known device ready for improvement (Ogusu's pager including its vibration actuator) to yield predictable results (a vibration actuator providing the desired vibration output with a specific amplitude and frequency corresponding to a user input). *Wolfe,* ¶¶333–334.

K. Grounds 2D–F: Each of Ogusu-Fukumoto, Ogusu-Fukumoto-Grant, and Ogusu-Fukumoto-Barton and Ueda Renders Obvious Claims 3–6

In Ground 1B (Section VII.D), Petitioners explain how Ueda teaches the additional limitations of dependent claims 3-6 and a POSITA would have been motivated to modify Fukumoto's PDA with Ueda's feedback control. The same analysis applies to combining Ueda's feedback control with each of the Ogusu-Fukumoto, Ogusu-Fukumoto-Grant, and Ogusu-Fukumoto-Barton combinations discussed above (Section VII.J.3). In these combinations, the control component in each Ogusu-based combination would receive the output signals from Ueda's sensors and adjust the operational control outputs according to those signals. *Wolfe*, ¶¶337–339. For motivation to combine, modifying the pager in each Ogusu-based combination with Ueda's feedback control would have amounted to no more than applying a known technique (Ueda's feedback control) to a device ready for improvement (the pager in each combination) to yield predictable results (a vibration actuator using feedback control to achieve the desired vibration output). *Wolfe,* ¶337; *KSR*, 550 U.S. at 417. A POSITA would have recognized that doing so would have resulted in the pager in each Ogusu-based combination more reliably delivering vibrations at the desired frequency and amplitude. *Ueda*, [0165]–[0166], [0347]; *Wolfe,* ¶337.

L. Grounds 2G–I: Ogusu-Fukumoto, Ogusu-Fukumoto-Grant, and Ogusu-Fukumoto-Barton and Erixon Renders Obvious Claims 7–8

Claims 7-8 would have been obvious over Fukumoto and Erixon. Section VII.E. Those claims would have also been obvious over Ogusu-Fukumoto and Erixon; Ogusu-Fukumoto-Grant and Erixon; and Ogusu-Fukumoto-Barton and Erixon, for the same reasons discussed in Section VII.E. *Wolfe*, ¶¶340–342. A POSITA would have recognized that Erixon is combinable with Ogusu-Fukumoto for the same reasons Erixon is combinable with Fukumoto alone as discussed in Section VII.E, and would have recognized Erixon and Ogusu are combinable because they are both directed to vibration generation in mobile devices. *Ogusu*, [0001]; *Erixon*, Abstract, Figs. 1, 2, [0002], [0053], [0075], [0099], [0102]; *Wolfe*, ¶¶340–342. A POSITA would have been motivated to combine Ogusu-Fukumoto, Ogusu-Fukumoto-Grant, and Ogusu-Fukumoto-Barton with Erixon for the same reasons discussed in Section VII.E. *Wolfe*, ¶¶340–342.

VIII. THE DISCRETIONARY FACTORS FAVOR INSTITUTION

A. 35 U.S.C. § 314(a)

The weight of the factors articulated in *Apple Inc. v. Fintiv, Inc.*, IPR2020-00019, Paper 11, 6 (Mar. 20, 2020) (precedential) favors institution.[18]

---

[18] The *Fintiv* framework should not be followed because it is legally invalid as (1)

1. Stay.

Factor 1 is neutral. Petitioners have not requested a stay but intend to do so. *See Fintiv,* 12.

2. Trial Date.

Any comparison of a projected FWD date against trial date is at best speculative, but the docket control order in the Samsung litigation currently sets jury selection for August 5, 2024. EX1018. This factor should not be strictly applied because Petitioners would be deprived of a reasonable opportunity to file an IPR (and make meaningless the one-year statutory deadline) entirely based on Plaintiff's choice of jurisdiction.

3. Diligence/Investment.

Factor 3 weighs strongly against discretionary denial. Petitioners filed this petition at an early stage of litigation, within eight months after being served with the Complaint, eight weeks after Resonant served amended infringement contentions on April 14, 2023, and before Samsung will file invalidity contentions on June 16, 2023. EX1017, 1020. The Markman hearing is not scheduled until February 15, 2024, approximately eight months away. EX1018.

---

exceeding the Director's authority, (2) arbitrary and capricious, and (3) adopted without notice-and-comment rulemaking.

At institution, much work in district court will remain (e.g., claim construction briefing, fact and expert discovery, and dispositive motions). *Id.*

4. Overlap.

Factor 4 weighs against discretionary denial. Petitioners challenge claims 1–9, 11, 14–17, and 19–20, whereas Resonant has alleged infringement of only claims 1–8 and 17. EX1017. A material number of the Challenged Claims will not be addressed by the district court.

Petitioners have stipulated that, unless the Board denies or later vacates institution of this Petition, Petitioners will not seek resolution of invalidity in the co-pending litigation based on the specific grounds asserted in this Petition or any grounds including Fukumoto and Ogusu, the primary references in this Petition. EX1043.

5. Other Considerations.

Even if the *Fintiv* factors favor discretionary denial (which they do not), the merits are compelling here.

IX. MANDATORY NOTICES UNDER 37 C.F.R. § 42.8

A. Real Parties-in-Interest

Petitioners identify Samsung Electronics Co., Ltd. and Samsung Electronics America, Inc. as the real parties-in-interest.

B. Related Matters

To the best of Petitioners' knowledge, the '830 patent has not been

challenged in any *inter partes* review prior to this proceeding and is or has been involved in the following district court litigations:

Name	No.	Court	Filed
Resonant Systems, Inc. v. Samsung Electronics Co., Ltd. et al.	2:22-cv-00423	E.D. Tex.	Oct. 26, 2022
Resonant Systems, Inc. v. Sony Group Corporation (Japan) et al.	2:22-cv-00424	E.D. Tex.	Oct. 26, 2022
Resonant Systems, Inc. d/b/a RevelHMI v. Apple, Inc.	7:23-cv-00077	W.D. Tex.	Jun. 1, 2023

C. Lead and Backup Counsel

Lead Counsel	Back-Up Counsel
Jessica Kaiser, Reg. No. 58,937 (jessica.kaiser@arnoldporter.com) Arnold & Porter Kaye Scholer LLP 1144 Fifteenth Street, Ste. 3100 Denver, CO 80202-2848 Tel: 303-863-2336 Fax: 303-863-2301	Jin-Suk Park, Reg. No. 50,678 (jin.park@arnoldporter.com) Christopher Marando, Reg. No. 67,898 (chris.marando@arnoldporter.com) Arnold & Porter Kaye Scholer LLP 601 Massachusetts Ave., NW Washington, DC 20001-3743 Tel: 202-942-5000 Fax: 202-942-5999 Tyler Knox, Reg. No. 79,948 (tyler.knox@arnoldporter.com) Arnold & Porter Kaye Scholer LLP 1144 Fifteenth Street, Ste. 3100 Denver, CO 80202-2848 Tel: 303-863-2379 Fax: 303-863-2301

D. Service Information

Please address all correspondence to lead and back-up counsel at the addresses shown above. Petitioners consent to electronic service by e-mail.

X. FEES

Petitioners concurrently electronically submit the required fees for this Petition. The Board is authorized to charge Arnold & Porter Kaye Scholer LLP's deposit account, No. 50-2387, for any fee deficiency.

Date: June 14, 2023

Respectfully submitted,

/Jessica Kaiser/
Jessica Kaiser, Lead Counsel
Reg. No. 58,937

CERTIFICATE OF COMPLIANCE

The undersigned hereby certifies that the foregoing Petition for *Inter Partes* Review contains 13,996 words, excluding those portions identified in 37 C.F.R. § 42.24(a), as measured by the word-processing system used to prepare this paper.

/Jessica Kaiser/
Jessica Kaiser (Reg. No. 58,937)
Lead Counsel

CERTIFICATE OF SERVICE

I certify that on June 14, 2023, I caused a true and correct copy of the foregoing Petition for *Inter Partes* Review of U.S. Patent No. 9,941,830 and supporting exhibits to be served via overnight delivery on the Patent Owner at the following correspondence address of record as listed on PAIR:

Olympic Patent Works PLLC
4979 Admiral Street
Gig Harbor, WA 98332

A courtesy copy was also sent via electronic mail to Patent Owner's litigation counsel listed below:

Reza Mirzaie (rmirzaie@raklaw.com)
Kristopher R. Davis (kdavis@raklaw.com)
Christian W. Conkle (cconkle@raklaw.com)
Jason Wietholter (jwietholter@raklaw.com)
Qi Tong (ptong@raklaw.com)
Paul Anthony Kroeger (pkroeger@raklaw.com)

/Jessica Kaiser/
Jessica Kaiser (Reg. No. 58,937)
Lead Counsel