Trials@uspto.gov
571-272-7822

Paper 48
Entered: January 8, 2025

UNITED STATES PATENT AND TRADEMARK OFFICE

BEFORE THE PATENT TRIAL AND APPEAL BOARD

SAMSUNG ELECTRONICS CO., LTD., AND SAMSUNG ELECTRONICS AMERICA, INC.,
Petitioner,

v.

RESONANT SYSTEMS, INC.,
Patent Owner.

IPR2023-00993
Patent 9,941,830 B2

Before JAMES J. MAYBERRY, STEVEN M. AMUNDSON, and MICHAEL T. CYGAN, *Administrative Patent Judges*.

CYGAN, *Administrative Patent Judge*.

JUDGMENT
Final Written Decision
Determining Some Challenged Claims Unpatentable
35 U.S.C. § 318(a)

I. INTRODUCTION

A. Background and Summary

Samsung Electronics Co., Ltd, and Samsung Electronics America, Inc. (collectively, "Petitioner") filed a Petition requesting an *inter partes* review of claims 1–9, 11, 14–17, 19, and 20 of U.S. Patent No. 9,941,830 B2 (Ex. 1001, "the '830 patent"). Paper 3 ("Pet."). Resonant Systems, Inc. ("Patent Owner") filed a Preliminary Response to the Petition. Paper 11. The Petition is supported by a declaration from Dr. Andrew Wolfe. Ex. 1003 ("Wolfe Declaration"). With our authorization, Petitioner filed a Reply to the Preliminary Response and a *Sotera* stipulation. Paper 14; Ex. 1044. Under that same authorization, Patent Owner filed a Sur-reply. Paper 15. We instituted *inter partes* review on all asserted claims and grounds. Paper 18 (Inst. Dec.).

Patent Owner filed a Response, accompanied by a declaration of Dr. Keith W. Goossen. Paper 28 ("PO Resp."); Ex. 2008 ("Goossen Decl."). Petitioner filed a Reply, accompanied by a Supplemental Declaration of Dr. Andrew Wolfe, and a transcription of a deposition of Dr. Goossen. Paper 37 ("Pet. Reply"); Ex. 1047 ("Wolfe Decl."); Ex. 1048 ("Goossen Dep."). Patent Owner filed a Sur-reply. Paper 41 ("PO Sur-reply"). We held an Oral Hearing with the parties on October 10, 2024, and a transcript was entered into the record. Paper 47 ("Tr.").

We have jurisdiction under 35 U.S.C. § 6. We issue this Final Written Decision under 35 U.S.C. § 318(a) and 37 C.F.R. § 42.73. For the reasons explained below, Petitioner has shown by a preponderance of the evidence that claims 1, 2, 7, 8, 11, 15–17, and 20 of the '830 patent are unpatentable, and has not shown by a preponderance of the evidence that claims 3–6, 9, 14, and 19 of the '830 patent are unpatentable.

META-1056, p. 2
Meta v. Resonant
IPR2025-00823

B. Real Parties in Interest

Petitioner identifies Samsung Electronics Co., Ltd. and Samsung Electronics America, Inc. as real parties-in-interest. Pet. 95. Patent Owner identifies Resonant Systems, Inc. as a real party-in-interest. Paper 6, first unpaginated page.

C. Related Matters

The parties represent that the '830 patent is involved in *Resonant Systems, Inc. v. Samsung Electronics Co., Ltd., et al.*, EDTX, case number 2:22-cv-00423; *Resonant Systems, Inc. v. Sony Group Corporation, et al.*, case number EDTX 2:22-cv-00424; *Resonant Systems, Inc. d/b/a RevelHMI v. Apple, Inc.*, WDTX, case number 7:23-cv-00077. *Id.*; Pet. 96.

Petitioner also challenged claims 1–20 of the '830 patent in IPR2023-01025.[1] Paper 4, 2.

D. The '830 Patent

The '830 patent is titled "Linear Vibration Modules and Linear-Resonant Vibration Modules." Ex. 1001, code (54). The '830 patent issued from Application No. 15/181,249, filed on June 13, 2016, and claims priority, via continuation applications and a continuation-in-part application, to Provisional Application No. 61/179,109, filed on May 18, 2009. *Id.* at codes (21), (22), (60), (63).

The '830 patent relates to linear-resonant vibration modules providing vibrational forces from the linear oscillation of a weight or member, produced by rapidly alternating the polarity of driving electromagnets. Ex. 1001, 3:11–19. Feedback control is used to maintain the module at or near its resonant frequency. *Id.* at 3:19–21. Vibrational amplitude and frequency

[1] Trial was not instituted in IPR2023-01025. IPR2023-01025, Paper 16.

META-1056, p. 3
Meta v. Resonant
IPR2025-00823

combinations can be produced throughout a large region of amplitude/frequency space. *Id.* at 3:22–25.

E. Illustrative Claim

Claim 1 is illustrative, and recites as follows:[2]

[1pre] A vibration module comprising

[1a] a housing;

[1b] a moveable component;

[1c] a power supply;

[1d] user-input features;

[1e] a driving component that drives the moveable component to oscillate within the housing; and

[1f] a control component that controls supply of power from the power supply to the driving component to cause the moveable component to oscillate at a frequency and an amplitude specified by one or more stored values.

F. Evidence

Petitioner relies on the following patent document evidence.

Name	Patent Document	Exhibit
Fukumoto	US 7,292,227 B2	1005
Grant	US 2006/0284849 A1	1006
Barton	US 2006/0248183 A1	1007
Ueda	US 2004/0169480 A1	1008
Erixon	US 2008/0174187 A1	1009
Fuller	US 2008/0001484 A1	1010
Saiki	US 7,006,641 B1	1013
Masahiko	US 8,917,486 B2	1014
Dong	CN 101488697	1011
Ogusu	JP H8–196053	1015

[2] Bracketed numbering added as per the Petition.

G. Prior Art and Asserted Grounds

Petitioner asserts that claims 1–9, 11, 14–17, 19, and 20 would have been unpatentable on the following grounds:

Claim(s) Challenged	35 U.S.C. §	Reference(s)/Basis
1–3, 7–9, 15, 17, 20	103(a)	Fukumoto
1–3, 7–9, 15, 17, 20	103(a)	Fukumoto, Grant
1–3, 7–9, 15, 17, 20	103(a)	Fukumoto, Barton
3–6	103(a)	Fukumoto, Ueda
3–6	103(a)	Fukumoto, Grant, Ueda
3–6	103(a)	Fukumoto, Barton, Ueda
7, 8	103(a)	Fukumoto, Erixon
7, 8	103(a)	Fukumoto, Grant, Erixon
7, 8	103(a)	Fukumoto, Barton, Erixon
8	103(a)	Fukumoto, Fuller
8	103(a)	Fukumoto, Grant, Fuller
8	103(a)	Fukumoto, Barton, Fuller
14, 19	103(a)	Fukumoto, Dong, Ogusu
14, 19	103(a)	Fukumoto, Grant, Dong, Ogusu
14, 19	103(a)	Fukumoto, Barton, Dong, Ogusu
15, 20	103(a)	Fukumoto, Saiki
15, 20	103(a)	Fukumoto, Grant, Saiki
15, 20	103(a)	Fukumoto, Barton, Saiki
16	103(a)	Fukumoto, Saiki, Masahiko
16	103(a)	Fukumoto, Grant, Saiki, Masahiko
16	103(a)	Fukumoto, Barton, Saiki, Masahiko
1, 2, 7, 11, 15, 17, 20	103(a)	Ogusu, Fukumoto
1, 2, 7, 11, 15, 17, 20	103(a)	Ogusu, Fukumoto, Grant
1, 2, 7, 11, 15, 17, 20	103(a)	Ogusu, Fukumoto, Barton
3–6	103(a)	Ogusu, Fukumoto, Ueda
3–6	103(a)	Ogusu, Fukumoto, Grant, Ueda
3–6	103(a)	Ogusu, Fukumoto, Barton, Ueda
7, 8	103(a)	Ogusu, Fukumoto, Erixon

Claim(s) Challenged	35 U.S.C. §	Reference(s)/Basis
7, 8	103(a)	Ogusu, Fukumoto, Grant, Erixon
7, 8	103(a)	Ogusu, Fukumoto, Barton, Erixon

Petitioner asserts that the pre-AIA patentability scheme applies to the '830 patent. *See* Pet. 2, 6 n.2 ("Petitioners address the earliest priority date"). We note that the '830 patent issued from an application that was examined under the first-inventor-to-file provisions of the AIA. Ex. 1002, 104. However, even were the '830 patent given an effective filing date of its actual filing date, each prior-art reference would still antedate the '830 patent under the AIA prior-art scheme. Therefore, our determination would not be affected by which statutory scheme is applied. Consequently, we apply the pre-AIA patentability prior art statute in this proceeding.

II. ANALYSIS

A. Legal Standards

A claim is unpatentable under 35 U.S.C. § 103(a) if the differences between the claimed subject matter and the prior art are such that the subject matter, as a whole, "would have been obvious at the time the invention was made to a person having ordinary skill in the art [to which said subject matter pertains]." *KSR Int'l Co. v. Teleflex Inc.*, 550 U.S. 398, 406 (2007). The question of obviousness is resolved on the basis of underlying factual determinations including: (1) the scope and content of the prior art; (2) any differences between the claimed subject matter and the prior art; (3) the level

of ordinary skill in the art; and (4) objective evidence of non-obviousness.[3] *See Graham v. John Deere Co.*, 383 U.S. 1, 17–18 (1966).

B. Level of Ordinary Skill in the Art

Petitioner asserts that a person of ordinary skill in the art ["POSITA"] at the critical time "would have had a bachelor's degree in electrical engineering, mechanical engineering, computer science, or a similar field and two years of experience related to electronic consumer product design [and the] POSITA could have also obtained similar knowledge and experience through other means." Pet. 6 (citing Ex. 1003 ¶ 31). Patent Owner states that it would require experience with electro-mechanical control systems rather than electronic consumer product design. PO Resp. 3. Because Petitioner provides for "similar knowledge and experience through other means," we do not discern any meaningful distinction. Thus, we adopt Petitioner's proposed level of ordinary skill, as it appears to be consistent with the specification of the '830 patent and the prior art of record.

C. Claim Construction

In an *inter partes* review, we construe a patent claim "using the same claim construction standard that would be used to construe the claim in a civil action under 35 U.S.C. § 282(b)." 37 C.F.R. § 42.100(b). Under this standard, the words of a claim generally are given their "ordinary and customary meaning," which is the meaning the term would have to a person of ordinary skill at the time of the invention, in the context of the entire patent including the specification. *Phillips v. AWH Corp.*, 415 F.3d 1303, 1312–13 (Fed. Cir. 2005) (en banc).

[3] Neither party presents evidence or arguments regarding objective evidence of non-obviousness.

Here, Petitioner asserts that limitations [1b], [1e], and [1f] reciting "component" should be construed under 35 U.S.C. § 112, paragraph 6. Pet. 7–8. Patent Owner agrees that "driving component" and "control component" are means-plus-function terms, but argues that "moveable component" is not. PO Resp. 7.

Determining whether a limitation that does not use the term "means" invokes § 112, paragraph 6, involves a three-part inquiry: (1) there is a generic placeholder that substitutes for the term "means"; (2) the generic placeholder is modified by functional language; and (3) the limitation does not include the structure, material, or acts necessary to perform the function in question without need to resort to other portions of the specification or extrinsic evidence for an adequate understanding of the structure. *See Williamson v. Citrix Online, LLC*, 792 F.3d 1339, 1349 (Fed. Cir. 2015); *Tri-Med, Inc. v. Stryker Corp.*, 514 F.3d 1256, 1259–60 (Fed. Cir. 2008); *Rodime PLC v. Seagate Tech., Inc.*, 174 F.3d 1294, 1303–04 (Fed. Cir. 2015) (the court must "determine whether the claim nevertheless recites sufficient structure for performing the . . . function to take it outside the bounds of" § 112, paragraph 6).

In our Institution Decision, we determined that Petitioner's assertion that a "component" should be interpreted under 35 U.S.C. § 112, paragraph 6, "fell short of the full, three-part inquiry," and that it did not explain why any of the disputed limitations lack sufficient structure to perform the function. Inst. Dec. 8–9. We now review the construction arguments on the basis of the full record, which both parties have addressed in their briefing, and are not bound by our determination made on the prior incomplete record for purposes of institution.

1. Limitation [1b]

With respect to limitation [1b], a "moveable component," Petitioner argues that it should be construed as a means (component) having a function (moveable) that corresponds to a structure (a moving weight). Pet. 7. Petitioner argues that "essentially any physical component can perform the function of being moved," references different types of structure as the moving components in the '830 patent, and concludes that therefore the term has no definite structure. Pet. Reply 2 (citing Ex. 1001, Figs. 4A–4G, 14, 15–17). Patent Owner argues for a non-means-plus-function construction of a component that "is capable of being moved." PO Resp. 7–8 (citing Ex. 2008 ¶ 55). Patent Owner argues, and Petitioner agrees, that "there is likely no material difference between" the parties' proffered constructions such that construction is necessary. *Id.* at 8; Pet. Reply 7. We agree, because Petitioner has shown, and Patent Owner does not contest, that the prior art teaches such a component under either construction. *Infra* § II(D)(2)(a). Because Petitioner's assertions and our determination would be unaffected by its proposed construction, we need not construe this term. *See Nidec Motor Corp. v. Zhongshan Broad Ocean Motor Co.*, 868 F.3d 1013, 1017 (Fed. Cir. 2017) (noting that "we need only construe terms 'that are in controversy, and only to the extent necessary to resolve the controversy'" (quoting *Vivid Techs., Inc. v. Am. Sci. & Eng'g, Inc.*, 200 F.3d 795, 803 (Fed. Cir. 1999))).

2. Limitation [1e]

With respect to limitation [1e], a "driving component that drives the moveable component to oscillate within the housing," Petitioner argues that it should be construed as a means (component) having a function (driving the moveable component to oscillate within the housing) that corresponds to

a disclosed structure (one or more electromagnetic coils). Pet. 8. Patent Owner agrees that the driving component is in means-plus-function form, lacking specific structure to perform the claimed function. PO Resp. 8–9. Patent Owner argues that the correct construction is "[o]ne or more ***coils or electromagnets***." *Id.* at 8.

We agree that limitation [1e] sets forth a "driving component" defined solely by its function such that it is a substitute for a "means." We determine that the corresponding structure may be one or more coils, as argued by both parties. *See* Ex. 1001, Figs. 4A–4G (coil 420); Fig. 6 (coil 626); Fig. 13 (first coil 1302 and second coil 1304); Pet 7; PO Resp. 8. Petitioner's assertions in each ground are based upon a teaching of electromagnetic coil oscillation. *Id.* at 14, 17 (citing Ex. 1005, 14:32–37, 14:57–60), 76 (citing Ex. 1015 ¶¶ 23–32). Because our determination would be unaffected by Patent Owner's alternate electromagnet (non-coil) embodiment, we need not further construe this term. *See Nidec Motor Corp.*, 868 F.3d at 1017.

3. Limitation [1f]

Limitation [1f] recites, a "control component that controls supply of power from the power supply to the driving component to cause the moveable component to oscillate at a frequency and an amplitude specified by one or more stored values." Petitioner argues that it should be construed as a means (component) having a function (to control supply of power from the power supply to the driving component to cause the moveable component to oscillate at a frequency and an amplitude specified by one or

more stored values). Pet. 7–8.[4] Petitioner asserts that the corresponding structure in the '830 patent is a "Processor and H Bridge Switch, where [the] processor is programmed with an algorithm to perform the following steps: (1) set the mode and strength to default values or values represented by selections made by user input to the user input features, (2) provide a corresponding output to the power supply, and (3) provide a corresponding output to the H-bridge switch." *Id.* at 8 (citing Ex. 1001, 7:20–34, 8:20–30, Fig. 7A, Fig. 7C).

Patent Owner agrees that the control component is a means-plus-function term for which the corresponding structure may be a processor (but not an H Bridge switch) programmed with an algorithm identical to that proposed by Petitioner except for the corresponding output being provided to the driving component rather than to an H-bridge switch. PO Resp. 10, 12–14.

We agree with Patent Owner that the corresponding structure includes a "processor," "CPU," or "microprocessor." PO Resp. 10. For example, the specification discloses that a linear-resonant vibration module may include "a central processing unit ('CPU'), generally a small, low-powered microprocessor." Ex. 1001, 6:13–15. The specification also discloses that "a processor or microcontroller within a linear-resonant vibration module allows for a very large number of different processor-controlled vibration patterns and modes to be exhibited by the linear-resonant vibration module." *Id.* at 10:66–11:3.

---

[4] Petitioner alternately asserts that limitation [1f] may be given a non-means-plus-function interpretation, but does not explain why limitation [1f] should be given that construction. Pet. 18–21.

META-1056, p. 11
Meta v. Resonant
IPR2025-00823

We further agree that the processor's algorithm comprises a first step, "set the mode and strength to [default values or] values representing selections made by user input to the user input features." *See* PO Resp. 10; Ex. 2008 ¶¶ 63–64. Specifically, the '830 patent includes as Figures 7A–7C "control-flow diagrams" or algorithms that "illustrate the control program, executed by the CPU, that controls operation of an LRVM." Ex. 1001, 3:49–54, 6:52–54, Figs. 7A–7C. This first algorithmic step is supported by step 702 of Figure 7A, in which the program sets several variables to default values, including the mode variable indicating "the current operational mode of the device," and the strength variable indicating "the current user-selected strength of operation." Ex. 1001, 6:50–64.

We further agree that the processor's algorithm comprises a second step, "provide a corresponding output to the power supply so that the power supply provides a corresponding output to the driving component." *See* PO Resp. 10; Ex. 2008 ¶¶ 63–64. This second algorithmic step is supported by steps 760 and 762 of Figure 7C, which describe that

> when a change in the user controls has occurred[, i]n step 760, the variables mode and strength are set to the currently selected mode and vibrational strength, represented by the current states of control features in the user interface. Next, in step 762, the routine "control" computes an output value p corresponding to the currently selected strength, stored in the variable strength, and outputs the value p to the power supply so that the power supply outputs an appropriate current to the coil.

Ex. 1001, 8:20–30. Therefore, we agree with Patent Owner's two-step description of the corresponding structure to the function recited by the processor in limitation [1f], and, we adopt these algorithm steps as the algorithmic structure required by limitation 1f.

Patent Owner also argues that the claimed structure would also include an oscillator and microcontroller without additional special programming is disclosed in the '830 specification, but acknowledges that we need not determine this to resolve any ground of unpatentability asserted in the Petition. *Id.* at 10–12. We further note that whereas Patent Owner uses the term "representing," Petitioner uses the term "represented by"; Patent Owner acknowledges that this does not provide any relevant difference. *Id.* at 14. Because our determination would be unaffected by Patent Owner's alternate oscillator embodiment, and we discern no meaningful distinction between "representing" and "represented by," we need not further construe this term. *See Nidec Motor Corp.*, 868 F.3d at 1017.

With respect to the H-bridge switch, Patent Owner states that the Petition does not explain why the H-bridge switch corresponds to any portion of the control component term's claimed function, and therefore we need not resolve whether the corresponding structure must include an H-bridge switch. PO Resp. 15–16; *but see id.* at 24–25 (arguing nonobviousness under Petitioner's construction). We agree. Petitioner's contentions for its Fukumoto-based grounds and its Ogusu-based grounds admit that neither Fukumoto nor Ogusu teaches an H-bridge switch, and instead argue that H-bridge switches were well-known alternatives to oscillator circuits for converting power into a desired waveform. Pet. 22 (citing Ex. 1003 ¶¶ 175–183), 84 (citing Ex. 1003 ¶¶ 319–321). We further note that the '830 patent describes the H-bridge switch as "but one example of various different types of electrical and electromechanical switches that can be used to rapidly alternate the direction of current within the coil of an LRVM." Ex. 1001, 6:1–5. This description indicates that the corresponding

structure is not limited to an H-bridge switch, but includes other known switches having the same function. We additionally note that other proceedings on the same and related patents have construed claim 1 and not required an H-bridge switch as part of the corresponding structure. *See* Ex. 1054, 15–16; Ex. 1055, 19 n.10, 20 (corresponding structure of "control component" includes "input the control value to an H-bridge switch circuit" but finding it "not necessary on this record to determine if the 'control component' structure also requires an H-bridge switch"), Ex. 1056, 20 n.11, 21 (same).

4. Claim 3

Claim 3 recites:

> 3. The vibration module of claim 1 wherein the control component receives output signals from sensors within the vibration module during operation of the vibration module and adjusts one or more operational control outputs of the control component according to the received output signals from the sensors.

Both parties contend that claim 3 fails to recite sufficient structure for the language modifying "control component" for essentially the same reasons discussed for limitation 1[f]. Pet. 7–8; Pet. Reply 1–2; PO Resp. 16. For essentially the same reasons discussed with respect to limitation 1[f], we agree, and determine that the control component in claim 3 is a means-plus-function limitation.

For claim 3, Petitioner identifies the language following the initial recitation of "control component" as the claimed function. Pet. 8. Petitioner identifies the corresponding structure described in the '830 patent's specification as follows: "Claim 1 structure with the processor further programmed with an algorithm to perform the following steps: (1) convert

the received output signal into an integer, (2) compare that integer to a specific value, (3) adjust one or more operational control outputs based on that comparison." *Id.* (citing Ex. 1001, 7:24–29, 7:42–8:19, Figs. 7A–7B). Petitioner contends that the Specification "does not disclose receiving 'the value' of an output signal" but instead "discloses receiving the output signal itself, followed by converting the output signal to an integer suitable for comparison." Pet. Reply 6–7 (citing Ex. 1001, 7:43–46).

Patent Owner identifies the corresponding structure described in the '830 patent's specification in the same way for claim 3 as for limitation 1f, i.e., an "oscillator circuit; microcontroller with internal or external memory; processor; CPU; microprocessor; and equivalents thereof." PO Resp. 16. Patent Owner argues that where "the corresponding structure is a processor, CPU, or microprocessor, the processor/CPU/microprocessor is programmed with an algorithm" comprising the following steps: "(a) receive the value of an output signal; (b) compare that value to a different value, which could be a previous value; and (c) adjust one or more operational control outputs based on that comparison." PO Resp. 16 (emphases omitted) (citing Ex. 2012, 35–36 (citing Ex. 1001, 7:13–18, 7:32–8:9, Figs. 7A–7B)). Patent Owner notes that the parties agree that the algorithm includes at least the following step: "adjust one or more operational control outputs based on that comparison." *Id.* at 17. Patent Owner contends that any required algorithm must contain either Petitioner's proposed steps (1) and (2), or Patent Owner's proposed steps (a) and (b). *Id.*

35 U.S.C. § 112(f) requires "descriptive text" in the patent disclosure such that a POSITA would "know and understand what structure corresponds to the means limitation." *Bosch Auto. Serv. Sols., LLC v. Matal*, 878 F.3d 1027, 1039 (Fed. Cir. 2017). Both parties cite to the same Figures,

Figures 7A and 7B, and their accompanying description in the '830 patent as providing that descriptive text. Pet. 8 (citing Ex. 1001, 7:24–29, 7:42–8:19, Figs. 7A–7B); PO Resp. 16 (citing Ex. 2012, 35–36 (citing Ex. 1001, 7:13–18, 7:32–8:9, Figs. 7A–7B)). Both parties agree that Petitioner's proposed algorithm represents structure corresponding to the claimed function. Pet. 8; PO Resp. 17 ("Patent Owner agrees that Petitioner's algorithm would be sufficient to perform the claimed function"). Consequently, we adopt Petitioner's proposed algorithm as the algorithmic structure required by claim 3.

5. Claim 4

Claim 4 recites:

> 4. The vibration module of claim 1 wherein the control component adjusts the one or more operational control outputs of the control component according to the received output signals from the sensors in order that subsequent operation of the vibration module produces desired outputs from the one or more sensors corresponding to one or more operational control parameters.

a) "control component"

Both parties contend that claim 4 should be construed as means-plus-function and having the same structure each party asserted with respect to claim 3. *See* Pet. 7–8; Pet. Reply 1–2; PO Resp. 6–7, 16–17; PO Sur-reply 6.

We agree with the parties that § 112's means-plus-function provision applies to claim 4 for the same reasons expressed for claim 3, and for those reasons, further determine that Patent Owner's corresponding structure is the correct construction of claim 4.

b) Antecedent basis issues

Although claim 4 depends directly from claim 1, Petitioner asserts that claim 1 lacks an antecedent basis for the following terms in claim 4: "the one or more operational control outputs of the control component," "the sensors," and "the one or more sensors." Pet. 9, 51. Petitioner asserts that claim 4 should be construed as depending from claim 3, or that no antecedent should be present in the "operational control outputs" or "sensors." *Id.* at 9, 51. However, Petitioner asserts that we need not resolve this matter to resolve the patentability issues because its obviousness assertions apply to either interpretation. *Id.* at 8.

Patent Owner contends that claim 4 "contains a clear typographical error" and "should be interpreted as depending from claim 3." PO Resp. 17–18. Patent Owner explains that claim 3 "introduces limitations of 'sensors' and 'one or more operational control outputs of the control component'" and claim 4 "then refers to 'the sensors' and 'the one or more operational control outputs.'" *Id.* at 17. Patent Owner contends that the "natural conclusion is that these terms in claim 4 are meant to refer to the corresponding terms in claim 3." *Id.* at 18. Patent Owner, like Petitioner, contends that we need not resolve this construction, because it would not affect the outcome of the obviousness dispute. *Id.*

During the oral hearing, Petitioner's counsel agreed that we may consider claim 4 as depending from claim 3 for purposes of this proceeding. Tr. 18:4–22. Hence, for purposes of this proceeding, we consider claim 4 as depending from claim 3. We note that two district courts have resolved the same antecedent-basis issue in the same claim or in a similar claim by modifying claim dependency this way. *See* Ex. 1053, 50; Ex. 1054, 22.

D. Obviousness over Fukumoto

Petitioner asserts that claims 1–3, 7–9, 15, 17, and 20 are unpatentable under 35 U.S.C. § 103(a) as obvious over Fukumoto. *See* Pet. 9–35; Pet. Reply 16–22. Patent Owner disputes Petitioner's contentions. *See* PO Resp. 18–27; PO Sur-reply 7–14. For the reasons explained below, we agree with Petitioner that claims 1, 2, 7, 15, 17, and 20 are unpatentable under § 103(a) because the claims would have been obvious over Fukumoto but disagree that claims 3, 8, and 9 are unpatentable based on Fukumoto.

1. Fukumoto

Fukumoto is titled "Electronic Device, Vibration Generator, Vibration-Type Reporting Method, and Report Control Method." Ex. 1005, code (54). Fukumoto relates to an electronic device having a touch-based user interface having vibrational feedback. *Id.* at 1:51–63. Fukumoto addresses a concern that touch input interfaces may insufficiently indicate whether such input has been accepted due to drawbacks of audio and visual feedback. *Id.* at 1:13–41. Fukumoto uses a vibration generator imparting vibration to a housing of an electronic device. *Id.* at 4:31–47.

2. Claim 1 over Fukumoto

We begin our analysis of Petitioner's obviousness contentions with Petitioner's assertions as to claim 1.

a) Limitations [1pre]–[1b], [1d]–1[e]

Claim 1 recites, "[1pre] A vibration module comprising [1a] a housing; [1b] a moveable component; . . . [1d] user-input features; [1e] a driving component that drives the moveable component to oscillate within the housing."

Relying on Figure 3 of Fukumoto, Petitioner asserts that limitation [1pre] is taught by Fukumoto's electronic device causing generation of vibration. Pet. 12–13 (citing Ex. 1005, Abstr.).

Petitioner asserts that limitation [1a] is taught by Fukumoto's case 115a. *Id.* at 13 (citing Ex. 1005, 15:56–59; Ex. 1003 ¶ 161).

Petitioner asserts that limitation [1b] is taught by Fukumoto's movable magnetic weight 122. *Id.* at 14 (citing Ex. 1005, 14:32–37; Ex. 1003 ¶¶ 162–164).

Petitioner asserts that limitation [1d] is taught by Fukumoto's touch panel, which permits a user to input operation instructions to its PDA (Personal Digital Assistant) device. *Id.* at 16–17 (citing Ex. 1005, Figs. 1–2, 13:40–14:13, 30:48–53, 31:27–29; Ex. 1003 ¶¶ 166–168).

Petitioner asserts that limitation [1e] is taught by Fukumoto's drive signal applied to coil 121, which causes movable magnetic weight 122 to reciprocate in the vertical direction. *Id.* at 17–18 (citing Ex. 1005, Fig. 3, 14:57–60; Ex. 1003 ¶¶ 169–171).

Patent Owner does not contest these assertions. *See* PO Resp. 18–25. Based on the complete trial record, we agree that the above-identified teachings of Fukumoto teach or suggest claim 1's preamble and limitations [1a]–[1b] and [1d]–[1e].

b) Limitations [1c], [1f]

Limitation [1c] recites "a power supply." Petitioner asserts that limitation [1c] is taught by Fukumoto's AC current in the form of a drive signal, for which a person having ordinary skill in the art would recognize as being supplied by a power supply. Pet. 15–16 (citing Ex. 1005, 14:57–60, 16:44–50; Ex. 1003 ¶ 165).

Limitation [1f] recites, "a control component that controls supply of power from the power supply to the driving component to cause the moveable component to oscillate at a frequency and an amplitude specified by one or more stored values." Petitioner asserts that, if limitation [1f] is construed as a means-plus-function claim, the corresponding structure for the function includes a processor and an H-bridge switch. *Id.* at 21–22.[5] Petitioner asserts that Fukumoto teaches processor 113, and that an H-bridge switch would have been obvious to one having ordinary skill in the art at the critical time because an H-bridge switch was a well-known component for converting input power into the desired waveform. *Id.* at 22 (citing Ex. 1003 ¶¶ 175–183). Dr. Wolfe testifies that Fukumoto's circuitry is an equivalent to an H-bridge switch. Ex. 1003 ¶¶ 183–184.

Petitioner further asserts that Fukumoto teaches an equivalent algorithm, in that Fukumoto's CPU reads the user-selected waveform data from memory 112 to apply a corresponding drive signal to coil 121. Pet. 21–22 (citing Ex. 1005, 17:7–11, 17:20–26, 14:57–60; Ex. 1003 ¶ 183). Petitioner asserts that the CPU instructs the power supply when it "instructs the drive signal generation circuit 114 to generate a drive signal," and in response, "the drive signal generation circuit 114 generates a drive signal using the waveform data supplied from the CPU 113." *Id.* at 22–23 (citing Ex. 1005, 17:20–26). Petitioner argues that a person having ordinary skill in the art would have found it obvious that "Fukumoto's power conversion from the battery into the desired waveform is equivalent to the '830 patent's

[5] Because we determine that limitation [1f] is construed as a means-plus-function claim, we do not address Petitioner's assertions based on a non-means-plus-function construction. *Supra* at § II(C)(3); *see* Pet. 18–21.

algorithm step of providing an output to an H-bridge switch." *Id.* at 23 (citing Ex. 1003 ¶ 183).

Patent Owner argues that Petitioner has not shown Fukumoto to teach the claimed control component; specifically, the algorithmic structure of "provide a corresponding output to the power supply so that the power supply provides a corresponding output to the driving component." PO Resp. 21–23.[6] Patent Owner argues that Petitioner does not explain what the structure of the power supply would be, and whether it can accept an output from a processor or other component. *Id.* at 21. Patent Owner further argues that Petitioner does not explain how any power supply is involved when Fukumoto's processor 113 instructs the drive signal generation circuit 114 to generate a drive signal in step S103. *Id.* at 23. Patent Owner argues that therefore, Petitioner has not shown Fukumoto to teach a control component that provides an output to the power supply as required by limitation [1f]. *Id.* at 22 (citing Ex. 2008 ¶ 83).

We are persuaded by Petitioner that Fukumoto teaches "provide a corresponding output to the power supply so that the power supply provides a corresponding output to the driving component" as required by our construction of limitation [1f].[7] *See supra* § II(C)(3). We agree with Petitioner that when CPU 113 instructs drive signal generation circuit 114 to generate a drive signal so that drive signal generation circuit 114 applies a

---

[6] Patent Owner argues that other corresponding structures could exist (oscillator circuits or microcontrollers). PO Resp. 19–20. Petitioner does not assert unpatentability based upon these structures. Therefore, our analysis is limited to the corresponding structure at issue in this proceeding.
[7] Because we do not adopt Petitioner's "H-bridge" construction for limitation [1f], we need not address Patent Owner's arguments premised on that construction. PO Resp. 23–24.

drive signal to the oscillatory actuator, CPU 113 "provide[s] a corresponding output to the power supply so that the power supply provides a corresponding output to the driving component" according to algorithmic structure step (b). *See* Pet. 22–23; Ex. 1003 ¶ 189. The Petition indicates that Fukumoto's CPU provides a corresponding output to drive signal generation circuit 114 as part of the "power supply" required by limitation 1c, i.e., when CPU 113 "instructs the drive signal generation circuit 114 to generate a drive signal." Pet. 22. The Petition further indicates that Fukumoto's power supply (drive signal generation circuit 114) then provides a corresponding output in the form of a drive signal to the driving component (coil 121). *Id.* at 22–23.

Patent Owner's argument that Petitioner relies upon a battery having no inputs as Fukumoto's power source are unavailing. Patent Owner further argues that Petitioner uses a battery as an example of a power supply, and that Petitioner has not established that a battery could accept an output from a processor. PO Resp. 21–22 (citing Pet. 22–23; Ex. 2008 ¶ 80). Petitioner uses a battery only as an example of a power supply. *See* Pet. 22 ("to convert power supplied from, e.g., the battery in the electronic device to the AC drive signal"), 23 ("to convert power supplied from, for example, the battery in the electronic device to the AC drive signal"); Tr. 47:11–13 (Patent Owner's counsel stating, "All that's pointed to [in the Petition] is the fact that there's drive power or small power, so there must be some power supply. Later on they take the example of a battery."). Petitioner clearly indicates that Fukumoto teaches a power supply due to the "'small power' [that] is supplied to the coil using a power supply," not merely the battery of its device. Pet. 16; *see* PO Resp. 20 (acknowledging that for the power supply, Petitioner relies upon the element that generates the drive power that

powers the drive signal applied to the coil). Petitioner relies upon the "small power" of Fukumoto's device as controlled through the drive signal generation circuit as the power supply, not merely Fukumoto's battery.[8]

Moreover, we determine that the claimed "power supply" need not be limited to an originating source of power such as a battery. During oral argument, Patent Owner agreed that the claimed "power supply" could be met by an element that is "part of the power supply, and that there's something else involved in the supply of power, some further upstream source of power, be it a battery or wall plug or something like that." Tr. 46:24–47:8 (arguing that such an interpretation was not in the Petition). Therefore, we are persuaded by Petitioner that drive signal generation circuit 114, which is controlled by the CPU 113 and supplies power to the driving element, teaches the claimed power supply as set forth in limitations [1c] and [1f].

We further agree with Petitioner's uncontested assertion that Fukumoto teaches the remaining algorithmic structure of limitation [1f], "set the mode and strength to [default values] or values representing selections made by user input to the user input features." *See supra* at § II(C)(3). Specifically, CPU 113 "determines whether a touch signal has been input from the touch panel 102 and whether a key operation signal has been input from the key input unit 111." Ex. 1005, 17:1–4, Fig. 5 (step S101); *see* Ex. 1003 ¶¶ 91, 189. When CPU 113 "determines that at least one of the touch signal or key operation signal has been input," CPU 113 "reads from the memory 112 the waveform data of the drive signal to be applied to the

[8] Thus, we need not address the parties' arguments concerning whether such a prior art battery may have control inputs. PO Resp. 21–23; Pet. Reply 19–20.

oscillatory actuator 115." Ex. 1005, 17:7–11, Fig. 5 (step S102); *see* Ex. 1003 ¶¶ 91, 189.

c) Determination

Based on the foregoing and on the complete trial record, we determine that Petitioner has shown, by a preponderance of the evidence, that claim 1 would have been obvious over the teachings of Fukumoto.

3. Claims 2, 3, 7–9, 15, 17, and 20 over Fukumoto

Petitioner provides a detailed analysis of the limitations of claims 2, 3, 7–9, 15, 17, and 20, and points to teachings in Fukumoto as meeting each limitation. Pet. 23–35.

a) Claim 2

Claim 2 reads as follows (with bracketed letters added for reference purposes):[9]

> 2. [pre] The vibration module of claim 1 wherein the control component is one of:
>
> [a] an variable oscillator circuit with additional control circuitry; and
>
> [b.i] a control component that includes a microprocessor,
>
> [b.ii] a control program, stored in an electronic memory within, or separate from, the microprocessor, the control program executed by the microprocessor to control supply of power from the power supply to the driving component to cause the moveable component to oscillate at a frequency and an amplitude specified by user input received from the user-input features.

Petitioner contends that Fukumoto teaches claim 2's subject matter because Fukumoto discloses a "microprocessor" according to limitation 2b.i and a "control program" according to limitation 2b.ii. *See* Pet. 23–24.

---

[9] We use the same reference letters that Petitioner uses to identify the claim language. *See* Pet. vii (Listing of Challenged Claims).

Specifically, Petitioner asserts that Fukumoto's CPU 113 executes a program stored in memory 112 for "vibration control processing." *Id.* at 23 (citing Ex. 1005, 14:2–13). Petitioner also asserts that an ordinarily skilled artisan would have understood that the program for "vibration control processing" would be "stored in an electronic memory within, or separate from, the microprocessor" according to limitation 2b.ii "so that CPU 113 could execute it." *Id.* at 23–24 (citing Ex. 1003 ¶ 193).

Additionally, Petitioner contends that Fukumoto teaches "control supply of power from the power supply to the driving component to cause the moveable component to oscillate at a frequency and an amplitude specified by user input received from the user-input features" according to limitation 2b.ii for the reasons Fukumoto teaches limitation 1f. Pet. 24 (citing Ex. 1003 ¶ 193).

Patent Owner makes no arguments specific to claim 2. *See, e.g.*, PO Resp. 27.

For the reasons stated by Petitioner and supported by Dr. Wolfe's testimony, we agree with Petitioner that Fukumoto teaches claim 2's subject matter. Hence, Petitioner has shown by a preponderance of the evidence that claim 2 is unpatentable under § 103(a) because the claim would have been obvious over Fukumoto.

b) Claim 3

Claim 3 depends directly from claim 1 and further requires that "the control component receives output signals from sensors within the vibration module during operation of the vibration module and adjusts one or more operational control outputs of the control component according to the received output signals from the sensors."

Petitioner contends that Fukumoto teaches claim 3's subject matter if § 112's means-plus-function provision does not apply to claim 3. *See* Pet. 24 n.12. Petitioner does not contend that Fukumoto teaches claim 3's subject matter if § 112's means-plus-function provision applies to claim 3. *See id.*

As discussed above, we determine that § 112's means-plus-function provision applies to claim 3. *Supra* at § II(C)(4). Because Petitioner does not contend that Fukumoto teaches claim 3's subject matter if § 112's means-plus-function provision applies to claim 3, Petitioner has not shown by a preponderance of the evidence that claim 3 is unpatentable under § 103(a) based on Fukumoto.

Additionally, in the challenges that combine Grant or Barton with Fukumoto, Petitioner does not rely on Grant or Barton for teaching claim 3's limitations and, therefore, fails to show how Grant or Barton cures the infirmities in Fukumoto with respect to claim 3. *See* Pet. 35–45. Petitioner has not shown by a preponderance of the evidence that claim 3 is unpatentable under § 103(a) based on either Fukumoto and Grant or Fukumoto and Barton.

c) Claim 7

Claim 7 depends directly from claim 1 and specifies that "the driving component comprises one or more electromagnetic coils that generate magnetic fields parallel to the directions in which the moveable component is driven by the driving component." Ex. 1001, 16:29–33.

Petitioner contends that Fukumoto teaches claim 7's subject matter because Fukumoto discloses "coil 121 used to drive movable weight 122." Pet. 27–28 (citing Ex. 1005, 14:57–60, Fig. 3). Further, Petitioner asserts that an ordinarily skilled artisan "would have recognized the magnetic fields

are generated parallel to the direction of moveable weight 112's vibrational movement (i.e., so that moveable weight 112 moves up and down)." *Id.* at 28 (citing Ex. 1003 ¶¶ 198–200).

Patent Owner makes no arguments specific to claim 7. PO Resp. 27; PO Sur-reply 7–14.

For the reasons stated by Petitioner and supported by Dr. Wolfe's testimony, we agree with Petitioner that Fukumoto teaches claim 7's subject matter. Hence, Petitioner has shown by a preponderance of the evidence that claim 7 is unpatentable under § 103(a) because the claim would have been obvious over Fukumoto.

d) Claim 8

Claim 8 reads as follows:

> 8. The vibration module of claim 1 wherein the housing is a tube, capped at both ends by movable-component-repelling components selected from one of mechanical springs and magnets;
>
> wherein the movable component is a magnet shaped to slide within the tube; and
>
> wherein the driving component is an electromagnetic coil.

Petitioner asserts that Fukumoto's case 115a teaches the claimed tube, referencing Patent Owner's purported statement "in district court that a 'tube' can have a rectangular cross-section." Pet. 29 (citing Ex. 1005, Fig. 3, 14:26–44; Ex. 1028, 61). Petitioner asserts that oscillatory actuator 115 in Figure 3 includes movable weight 122 as a "movable component [that] is a magnet shaped to slide within the tube," and also includes coil 121 as a "driving component [that] is an electromagnetic coil." Pet. 31 (citing Ex. 1005, 14:20–37, Fig. 3; Ex. 1003 ¶ 198).

META-1056, p. 27
Meta v. Resonant
IPR2025-00823

Petitioner asserts that oscillatory actuator 115 has "one end of case 115a capped by spring 123" in Figure 3, but it would have been obvious to have both ends of the case capped by springs because Fukumoto's Figure 83 shows an oscillatory actuator with both ends of the case (housing) capped by springs. *Id.* at 29–30. Petitioner asserts that an ordinarily skilled artisan would have been motivated to modify Figure 3's oscillatory actuator in view of Figure 83's oscillatory actuator to include springs on both the top and bottom of movable weight 122 in Figure 3 because "using multiple springs" would "dampen the vibration forces without damaging other components (e.g., the screen)" and "double the force of vibration created for greater effect while requiring less power." *Id.* at 30 (citing Ex. 1003 ¶ 197; Ex. 1005, 50:1–13, Fig. 83).

Although Petitioner provides this motivation to modify Figure 3's oscillatory actuator in view of Figure 83's oscillatory actuator, Petitioner argues that it "is not required to provide a motivation to combine the express disclosures of a single reference." Pet. Reply 23 (citing *Gen. Elec. Co. v. Raytheon Techs. Corp.*, 983 F.3d 1334, 1351–52 (Fed. Cir. 2020)). Petitioner also argues that Fukumoto includes "express language" that "explicitly suggests" modifying Figure 3's oscillatory actuator in view of Figure 83's oscillatory actuator. *Id.* (citing Ex. 1005, 48:53–55, 49:65–50:1, 50:9–13).

Patent Owner argues that Petitioner has not shown adequate motivation to modify Fukumoto's Figure 3 embodiment based on its Figure 83 embodiment. PO Resp. 25. As an initial matter, Patent Owner disputes that Petitioner "is not required to provide a motivation to combine the express disclosures of a single reference." PO Sur-reply 11–12. Regarding the *General Electric* decision cited by Petitioner, Patent Owner asserts that it

stands for the proposition that "there is no need to show a motivation to combine elements in the way that a prior art reference has already combined them, by including them within a single embodiment." *Id.* at 12 (emphasis omitted) (citing *Gen. Elec.*, 983 F.3d at 1352). According to Patent Owner, "the Federal Circuit has clearly stated that both a motivation to combine and reasonable expectation of success must be demonstrated, when seeking to combine multiple embodiments from the same reference." *Id.*

We agree with Patent Owner that a showing of motivation is required. Whether a proposed combination rests on "combining disclosures from multiple references, combining multiple embodiments from a single reference, or selecting from large lists of elements in a single reference, there must be a motivation to make the combination and a reasonable expectation that such a combination would be successful." *In re Stepan Co.*, 868 F.3d 1342, 1346 n.1 (Fed. Cir. 2017).

The *General Electric* decision cited by Petitioner does not hold otherwise. In *General Electric*, the Federal Circuit considered an obviousness challenge based on combining disclosures from multiple references. *See Gen. Elec.*, 983 F.3d at 1339–40, 1344–52. The Federal Circuit criticized the Board for dissecting an embodiment disclosed in the primary reference into a collection of "individual elements" and requiring the patent challenger to "re-do the work already done" regarding that embodiment in the primary reference. *Id.* at 1351–52. The Federal Circuit did not consider an obviousness challenge based on combining multiple embodiments from a single reference. *See id.* at 1344–52. Therefore, we do not agree with Petitioner that no motivation to combine the Figure 3 and Figure 83 embodiments of Fukumoto need be shown.

Patent Owner disputes both rationales proffered by Petitioner. Regarding Petitioner's rationale that "using multiple springs" would "dampen the vibration forces without damaging other components (e.g., the screen)," Patent Owner asserts that Figure 3's oscillatory actuator "already has structures between the weight 122 and the screen 103, including the spring 123, coil 121, and case 115a." PO Resp. 25–26 (citing Ex. 2008 ¶ 92). Patent Owner further asserts that Petitioner fails to explain "how the weight could damage the screen or other components in spite of these structures keeping them separate," and "how the addition of a second spring would make damage less likely." *Id.* at 26 (citing Ex. 2008 ¶ 93).

We agree with Patent Owner that Petitioner has not adequately supported this rationale. Petitioner fails to explain how movable weight 122 in oscillatory actuator 115 could damage touch panel 102 or display panel 103a when various structures separate those panels from movable weight 122. *See* Pet. 29–30; Ex. 1003 ¶ 202; Ex. 2008 ¶¶ 92–93. Consequently, we do not determine that this provides a reason to combine the Figure 3 and Figure 83 embodiments.

Regarding Petitioner's rationale that "using multiple springs" would "double the force of vibration created for greater effect while requiring less power," Patent Owner argues that Petitioner fails to provide "any evidence or explanation for how increasing the force and effect of vibration would reduce the power required." PO Resp. 26. Patent Owner argues that "there is no reason to expect that increasing forces will *decrease* power requirements" because "doubling the force on an object while keeping the distance and speed it moves the same is going to roughly double power consumption." *Id.* at 26–27 (citing Ex. 2008 ¶ 94). Patent Owner further argues that Fukumoto attributes doubling the force in Figure 83's oscillatory

actuator to "doubling the electrostatic force by doubling the number of electrodes," not doubling the number of springs. PO Resp. 27 (citing Ex. 1005, 50:4–13; Ex. 2008 ¶ 95). According to Patent Owner, "[d]oubling the number of springs without changing the force that drives the oscillations is not likely to increase the vibrations." *Id.* (citing Ex. 1005, 50:4–13; Ex. 2008 ¶ 95).

We agree that Petitioner has not adequately supported this rationale. As Patent Owner asserts, Fukumoto attributes doubling the force in Figure 83's oscillatory actuator not only to the vibration, but also to the electrostatic force. *See* Ex. 1005, 49:10–50:13, Figs. 82–83; Ex. 2008 ¶ 95; PO Resp. 27. For Figure 83, the number of driving electrodes are doubled, resulting in "the electrostatic force for causing the movable weight 813 to reciprocate becomes double and a greater vibration can be generated." Ex. 1005, 50: 4–13. Petitioner and its declarant do not address the effect of electrostatic force, focusing solely on the number of springs. Ex. 1003 ¶ 202. Because Petitioner's purported advantage results, at least in part, from additional features not included in its combination (i.e., additional driving electrodes), we are not persuaded by Petitioner's rationale for adding an additional spring.

Additionally, we disagree with Petitioner that Fukumoto includes "express language" that "explicitly suggests" modifying Figure 3's oscillatory actuator in view of Figure 83's oscillatory actuator. *See* Pet. Reply 23. In particular, Petitioner points to Fukumoto's disclosure that "the vibrator generator [in Figure 3] is not limited to a linear oscillatory actuator." Ex. 1005, 48:53–55 (cited by Reply 23). That disclosure says nothing about modifying springs in a linear oscillatory actuator.

Petitioner also points to Fukumoto's comparison of Figure 83's oscillatory actuator to Figure 82's oscillatory actuator. *See* Ex. 1005, 49:65–50:1, 50:9–13 (cited by Reply 23). That comparison has no relationship to Figure 3's oscillatory actuator, e.g., because Figure 3's oscillatory actuator generates vibrations using electromagnetic force produced by a coil instead of electrostatic force produced by counter electrodes. *See id.* at 13:19–24, 14:20–24, 14:56–60, 49:20–48, 50:1–13.

Because Petitioner fails to provide "an adequate motivation to modify" Figure 3's oscillatory actuator in view of Figure 83's oscillatory actuator to yield claim 8's subject matter, Petitioner has not shown by a preponderance of the evidence that claim 8 is unpatentable under § 103(a) based on Fukumoto.

e) Claim 9

Claim 9 depends from claim 1, and further recites, "wherein the housing is a tube, capped at both ends by movable-component-repelling components; and wherein the moveable component includes an electromagnetic-coil driving component and microprocessor."

With respect to claim 9, Petitioner also relies on the same asserted combination of Fukumoto's Figures 3 and 83. Pet. 31 ("Fukumoto discloses or suggests . . . 'the housing is a tube, capped at both ends by movable-component-repelling components," citing Pet. "VII.A.6" (its assertions for claim 8)). Petitioner does not present further reasons to combine Fukumoto's Figure 3 and Figure 83 embodiments. For the reasons expressed in our analysis of Petitioner's claim 8 assertions, we determine that Petitioner has not shown by a preponderance of the evidence that claim 9 is unpatentable under § 103(a) based on Fukumoto.

f) Claims 15 and 20

Claim 15 depends from claim 1, and further recites, "wherein the control component drives simultaneous oscillation of the moveable component at two or more frequencies to generate complex vibration modes." Claim 20 is an independent claim that contains every limitation of claim 1 and every limitation of claim 15, and no additional limitations.

Petitioner asserts that the additional limitations of claim 15 are taught by Fukumoto, pointing to Fukumoto's Figure 51 representing a combination of a vibrational waveform and an audio waveform. Pet. 33–34 (citing Ex. 1005, 18:15–17, 34:38–35:9). Petitioner asserts that a person having ordinary skill in the art would recognize the combined waveform would drive Fukumoto's moveable component at the different frequencies. *Id.* at 34 (citing Ex. 1003 ¶ 209). Patent Owner does not specifically contest these assertions. PO Resp. 27–28.

We are persuaded that the additional limitations of claim 15, appearing also in claim 20, are taught by Fukumoto's combined vibrational and audio waveform in the manner described by Petitioner. Consequently, we determine that Petitioner has shown by a preponderance of the evidence that claims 15 and 20 would have been obvious over the teachings of Fukumoto.

g) Claim 17

Claim 17 depends from claim 1, and further recites, "wherein the control component controls supply of power from the power supply to the driving component to cause the moveable component to oscillate at a frequency and an amplitude that are independently specified by user input received from the user input features."

Petitioner asserts that Fukumoto teaches this limitation, stating

> Specifically, a user touches a button or location of the touch panel, the CPU detects the touch location/button, reads the corresponding waveform data containing frequency and amplitude attributes from memory, and generates a drive signal sent to the oscillator actuator to vibrate according to the specified waveform's amplitude and frequency.

Pet. 34–35 (citing Ex. 1005, Fig. 5, 13:54–14:25; 29:9–11 ("[T]he waveform of the drive signal linked with each touch button differs in amplitude or shape"), 29:15–18 ("The above-mentioned waveform data table 112a stores the frequency data, amplitude data, and the like required for generating these drive signals as the waveform data."); Ex. 1003 ¶ 211. Patent Owner does not specifically contest these assertions. PO Resp. 27.

We are persuaded that the additional limitations of claim 17 are taught by Fukumoto's user-selected frequency and amplitude data used to generate a drive signal in the manner described by Petitioner. Consequently, we determine that Petitioner has shown by a preponderance of the evidence that claim 17 would have been obvious over the teachings of Fukumoto.

h) Determination

In view of the foregoing, we determine that Petitioner has shown by a preponderance of the evidence claims 2, 7, 15, 17, and 20 would have been obvious in view of the teachings of Fukumoto. We further determine that Petitioner has not shown by a preponderance of the evidence that claims 3, 8, and 9 would have been obvious in view of the teachings of Fukumoto.

4. Claims 3–6 over Fukumoto and Ueda

Petitioner asserts that the combined teachings of Fukumoto and Ueda made obvious claims 3–6. Pet. 45–56. Patent Owner argues against the combination for the same reasons as for claim 1, which we have found unavailing. *Supra* § II(D)(2); PO Resp. 30. Patent Owner further argues

that Petitioner's construction of "control component" requires the use of integer values that are not taught by Fukumoto or Ueda. PO Resp. 31 (citing Ex. 2008 ¶ 109; Pet. 50–51; Ex. 1003 ¶¶ 241–242; Ex. 2008 ¶ 109). However, Patent Owner does not dispute that Ueda discloses algorithmic structure according to claims 3 and 4 under Patent Owner's proposed means-plus-function construction for these claims. *See* PO Resp. 30–31; PO Sur-reply 14–16; Tr. 52:11–19; *supra* § II(C)(4).

a) Ueda

Ueda is a U.S. patent application publication titled "Control System for a Linear Vibration Motor," filed on July 15, 2003, and published on September 2, 2004. Ex. 1008, codes (12), (22), (43), (54). Ueda states that the invention "relates to motor driving apparatuses and, more particularly, to a motor driving apparatus for driving a linear vibration motor having a mover and a spring member for supporting the mover." *Id.* ¶ 1.

Ueda's motor driver 1a provides the AC voltage Vd having (1) "a frequency equal to the driving frequency determined by the driving frequency determining unit 2c" and (2) "the amplitude value determined by the driving voltage determining unit 7" to linear vibration motor 100 based on "the driving frequency signal Ifr and the voltage amplitude signal Odv." Ex. 1008 ¶ 146, Fig. 4(a); *see id.* ¶ 163. Specifically, "the amplitude value of the AC voltage Vd is changed to a larger value when the detected output Dop is smaller than the order output Oop." *Id.* ¶ 162. Conversely, "the amplitude value of the AC voltage Vd is changed to a smaller value when the detected output Dop is larger than the order output Oop." *Id.*

b) Claim 3

Claim 3 reads as follows:

> 3. The vibration module of claim 1 wherein the control component receives output signals from sensors within the vibration module during operation of the vibration module and adjusts one or more operational control outputs of the control component according to the received output signals from the sensors.

Petitioner asserts that the additional elements of claim 3 are taught by Ueda in the following manner:

> First, Ueda teaches converting Dop (the received output signal from output detector 4) into an amplitude value and converting Dposi (the received output signal from position detector 5) into a frequency. Ueda, [0149], [0152]; Wolfe, ¶¶ 241–242. Second, Ueda compares each of those converted values against a specific value (amplitude against Oop and frequency against Dreso). Ueda, [0149], [0152]–[0153]; Wolfe, ¶ 242. Finally, Ueda adjusts driving voltage and frequency (operational control outputs) based on those comparisons. Ueda, [0149], [0152]–[0153]; Wolfe, ¶ 242.

Pet. 50 (citing Ex. 1008 ¶¶ 149, 152–153; Ex. 1003 ¶¶ 241–242). Petitioner further asserts that a person having ordinary skill in the art would have been motivated to use Ueda's feedback control with Fukumoto's linear oscillatory oscillator to provide more reliable delivery of vibrations at the desired frequency and amplitude. *Id.* at 50–51 (citing Ex. 1003 ¶ 242).

Patent Owner contends that Ueda "never mentions any integer, nor suggests that any of the values relied on by [Petitioner] is an integer." PO Resp. 30–31 (citing Ex. 2008 ¶ 109); *see* PO Sur-reply 15. Patent Owner contends that Ueda "never mentions or suggests digital signals" or "integers," but instead, "consistently reads as an analog system, utilizing feedback control to control analog voltages." PO Resp. 31; PO Sur-reply 15.

Patent Owner also contends that comparing "the magnitude of the output signals Oop and Dop," as disclosed in Ueda, does not "require conversion to a digital value, let alone to an integer." PO Sur-reply 15.

We agree with Patent Owner that Ueda does not teach "convert[ing] the received output signal into an integer." *See* PO Resp. 30–31; PO Sur-reply 14–16. As Petitioner admits, Ueda does not use the word "integer." *See* Ex. 2008 ¶¶ 109, 184; Pet. Reply 25. Because Petitioner's construction, which we have adopted here, requires conversion to an integer, Petitioner's failure to explain how such an integer is taught renders its reasoning unpersuasive.

In its Reply, Petitioner proposes two add-on explanations to supply the explanation lacking in the Petition. First, Petitioner argues that Ueda's conversion from its Dop signal to another specific "magnitude" value would have been understood to be a conversion to an integer. Pet. Reply 25. Petitioner points to Dr. Goossen's statement at deposition agreeing that "values can encompass both integers and non-integers" and that a magnitude value "could happen to fall upon an integer value." *Id.* (citing Ex. 1048, 75:24–76:7, 84:10–12).

However, Dr. Goossen stated that Ueda does not compare values by converting Dop and Oop into digital signals. Ex. 1048, 80:7–81:1. Patent Owner points out that "Ueda consistently reads as an analog system, utilizing feedback control to control analog voltages." PO Sur-reply 41. Dr. Goossen testifies that the comparison of "magnitude" values for Dop and Oop disclosed in paragraph 149 involves analog signals, not integers or digital signals. Ex. 1048, 77:15–79:4, 79:20–81:1, 82:5–10. Dr. Goossen also testifies that such a comparison "would generally be done in some sort of hard-wired circuit like a comparator." *Id.* at 82:5–15. Nor does

Petitioner's declarant, Dr. Wolfe, ever state that Ueda describes conversion of its received output signals to integers. *See* Ex. 1003 ¶¶ 241–242. Consequently, Petitioner has not persuasively shown that Ueda teaches, to a person having ordinary skill in the art, conversion of signals into integers.

In Petitioner's second Reply argument, digital conversion would occur when Ueda's algorithm is implemented in Fukumoto's general-purpose processor. Pet. Reply 26. Dr. Wolfe states that such implementation requires Ueda's raw sensor input to be converted to digital values to be processed and compared. Ex. 1047 ¶ 16.

However, Petitioner did not in the Petition rely on Fukumoto's processor when asserting that the combined disclosures in the references teach claim 3's limitations under a `means-plus-function interpretation`. Pet. 50–51; *see* Ex. 1003 ¶¶ 241–242. Instead, Petitioner contended that "Ueda teaches a processor programmed with" the algorithmic steps required by claim 3. Pet. 50–51; *see* Ex. 1003 ¶¶ 241–241. In the Reply, Petitioner changed its unpatentability theory. As noted by Dr. Wolfe, Petitioner's new theory requires a new, additional obviousness rationale. Ex. 1047 ¶ 17 (stating that such conversion would result in either an integer or a fraction, and the choice of an integer would be one of a finite number of identified, predictable solutions).

A new theory of unpatentability presented in a Reply may be acceptable where it merely expands on its prior assertions in response to arguments made by the Patent Owner, but not where the Reply makes a "meaningfully distinct contention" or amounts to "an entirely new theory of *prima facie* obviousness absent from the petition." *Rembrandt Diagnostics, LP v. Alere, Inc.*, 76 F.4th 1376, 1383–84 (Fed. Cir. 2023). Here,

Petitioner's Reply is not merely expanding upon its theory in the Petition that Ueda teaches a processor programmed with the algorithmic steps. Instead, Petitioner relies on modifying Ueda with Fukumoto in a manner not specified in the Petition, and requiring a new rationale for why such a modification would teach an integer rather than another (e.g., fractional) value. Pet. Reply 26; Ex. 1047 ¶ 17. This is a meaningfully distinct contention from that set forth in the Petition and addressed by Patent Owner.

Even were Petitioner's Reply argument based on combination with Fukumoto to be considered, Petitioner merely states that the input must be converted to digital values, which as its declarant Dr. Wolfe points out, may be non-integers such as fractions. Pet. Reply 26; Ex. 1047 ¶¶ 16–17.

For the reasons discussed above, Petitioner has not shown by a preponderance of the evidence that claim 3 is unpatentable under § 103(a) based on Fukumoto and Ueda.

c) Claims 4–6

For purposes of this proceeding, we consider claim 4 as depending from claim 3. *See* Tr. 18:4–22; *supra* § II.C.5. Claims 5 and 6 depend from claim 4. Ex. 1001, 16:28–48. Hence, claims 4–6 incorporate all the limitations of their respective base claims. 35 U.S.C. § 112, 4th paragraph.

For the reasons discussed for claim 3, Petitioner has not shown by a preponderance of the evidence that claims 4–6 are unpatentable under § 103(a) based on Fukumoto and Ueda. See supra § II.D.4(b).

d) Determination

In view of the foregoing, we determine that Petitioner has not shown by a preponderance of the evidence claims 3–6 would have been obvious in view of the combined teachings of Fukumoto and Ueda.

5. Claim 8 over Fukumoto and Fuller

Petitioner asserts that claim 8 would have been obvious over Fukumoto and Fuller. Pet. 64. Patent Owner contests this assertion for the reasons set forth with respect to claim 1, and additionally, that motivation to combine Fukumoto and Fuller has not been established. PO Resp. 36–40.

a) Fuller

Fuller is a U.S. patent application publication titled "Linear Electromechanical Vibrator with Axially Movable Magnet," filed on July 3, 2006, and published on January 3, 2008. Ex. 1010, codes (12), (22), (43), (54). Fuller states that the invention "relates generally to linear electromagnetic vibrators, and, more particularly, to a non-rotary electromagnetic vibrator having a movable magnet that oscillates axially under the influence of an axial field coil." *Id.* ¶ 1.

Fuller's Figure 1 (reproduced below) is a perspective view of an electromagnetic vibrator:

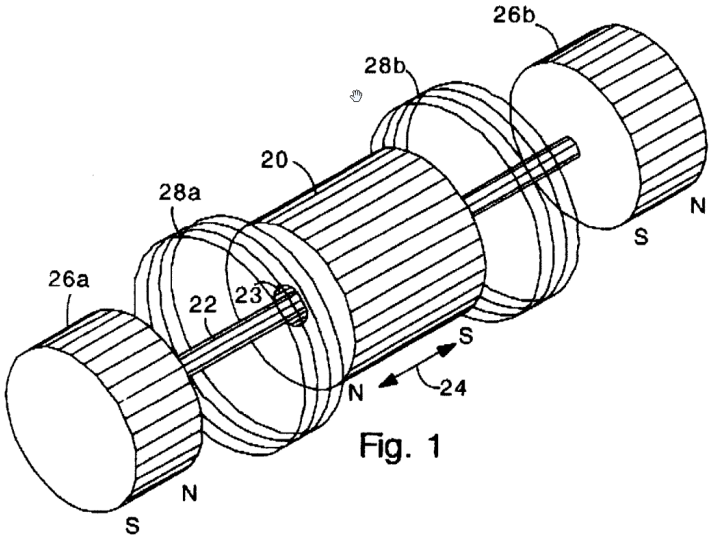

Fig. 1

Figure 1 illustrates an electromagnetic vibrator including the following components:

- movable magnet 20 that travels in an axial direction 24 and has central hole 23;
- axial shaft 22 extending through central hole 23 in movable magnet 20;
- two bumper magnets 26a and 26b "fixedly disposed at opposite ends of the axial shaft 22," "magnetized in the axial direction (i.e. parallel with the shaft 22)," and "oriented such that they magnetically repel the movable magnet 20 (i.e., they are oppositely poled to the end surface of the moveable magnet which is closest to the bumper magnet 26a or 26b)"; and
- two field coils 28a and 28b with inner diameters "large enough to accommodate" movable magnet 20 and "oriented such that they apply push and pull forces" to movable magnet 20 when receiving alternating current.

Ex. 1010 ¶¶ 27, 35, Fig. 1. Figure 1 does not show "an optional tubular enclosure" for the electromagnetic vibrator. *Id.* ¶ 27.

Fuller's Figure 2 (reproduced below) is a schematic cross-sectional view of a vibrator device with an electromagnetic vibrator:

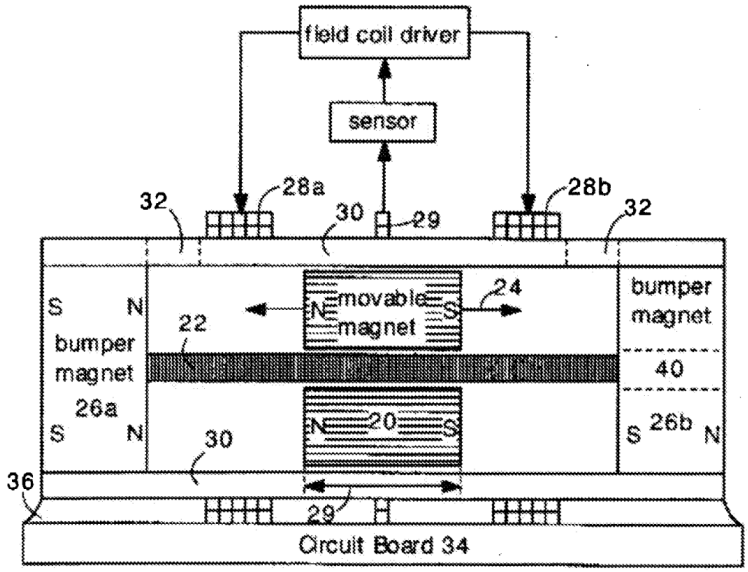

Fig. 2

Figure 2 illustrates an electromagnetic vibrator according to Figure 1 in tubular enclosure 30 and tubular enclosure 30 attached to circuit board 34 with adhesive 36. Ex. 1010 ¶¶ 28, 34, Fig. 2. Preferably, tubular enclosure 30 has air holes 32 that "reduce viscous friction losses" by "allowing air to escape and enter the enclosure as the movable magnet 20 oscillates." *Id.* ¶ 28. Figure 2 also illustrates bumper magnet 26b having optional air vent 40 that "allow[s] air to escape and enter the enclosure as the movable magnet 20 oscillates." *Id.* ¶ 29, Fig. 2.

b) Claim 8

Petitioner asserts that Fuller teaches a tubular enclosure, shown in Figure 2, a moveable magnet 20 shaped to slide within the enclosure, and electromagnetic coils 28a, 28b driving the movable component. Pet. 64–65 (citing Ex. 1010 ¶¶ 27, 35, Figs. 1–2). Petitioner further asserts that Fukumoto teaches magnet bumpers 26 at each end of the tube that repel the moveable magnet. *Id.* at 65 (citing Ex. 1010 ¶¶ 27, 35). Petitioner asserts that a person having ordinary skill in the art "would have found it obvious to apply the teachings of Fuller's electromagnetic vibrator for use in a cell phone to Fukumoto's mobile device" because "they are both directed to electromagnetic vibration generation in mobile device" and "because doing so would have amounted to nothing more than simple substitution of known components of a linear vibration actuator." Pet. 66 (citing Ex. 1005, Figs. 3, 16, 14:38–15:4, 16:17–37, 50:48–59; Ex. 1010, Abstr., Figs. 1–2 ¶¶ 4–5, 26, 38, 53; Ex. 1003 ¶ 268).

Patent Owner argues that an ordinarily skilled artisan would not have been motivated to make the "simple substitution" that Petitioner proposes because incorporating Fuller's "tube-shaped structures into Fukumoto's PDA-type device would result in vibrations perpendicular to the direction

necessary to provide the key-press haptic feedback required in Fukumoto." PO Resp. 38–39; PO Sur-reply 17. Patent Owner distinguishes Fukumoto's vibration perpendicular to its touch panel and transmitted to its screen from Fuller's vibration parallel to its screen and transmitted to the axial sides of its device. PO Resp. 37–38 (citing Ex. 1005, 14:63–66; Ex. 1010 ¶ 5; Ex. 2008 ¶ 127).

Patent Owner argues that the direction of vibration is important because Fukumoto requires screen-perpendicular vibration to "create the key-press haptic sensation desired in Fukumoto." *Id.* at 38 (citing Ex. 2008 ¶ 128). Patent Owner further argues that fitting Fuller's tube-shaped vibrator into Fukumoto to create screen-perpendicular vibrations would either substantially increase the thickness of Fukumoto or require an inventive redesign to redirect Fuller's vibrational forces. *Id.* at 39 (citing Ex. 2008 ¶ 129).

In its Reply, Petitioner points to Fuller's teaching that its motor may be "scaled to very small or very large sizes." Pet. Reply 9 (citing Ex. 1010 ¶ 53). Petitioner further argued that Dr. Goossen did not "determine the relative sizes of the Fukumoto PDA [Personal Digital Assistant] and the Fuller motor." *Id.* at 9–10 (citing Ex. 1048, 89:21–23, 111:17–19).

In its Sur-reply, Patent Owner argues that a "very small" version of Fuller's motor would produce correspondingly "very small" vibrations that would not produce Fukumoto's desired key-press haptic feedback. PO Sur-reply 17–18.

We are persuaded by Petitioner's reasoning, which is supported by the record. Fuller's vibrator is designed for use in "cellular telephones and portable electronics," having the advantages of being an "inexpensive,

simple, and energy efficient miniature vibrator" Ex. 1003 ¶ 105 (citing Ex. 1010 ¶¶ 2–4). Because Fuller's "miniature vibrator" was purposed for use in cell phones and portable electronics, we do not agree that its use in a PDA such as Fukumoto's would produce insufficient vibration even in a screen-parallel vibrational mode.

We credit Dr. Wolfe's testimony that

> the proposed combination would have amounted to no more than applying a known technique (Fuller's vibrator driven by electromagnetic coils and using bumper magnets) to a known device ready for improvement (Fukumoto's mobile device including a linear oscillatory actuator driven by electromagnetic coils that uses a single spring) to yield predictable results (a mobile device with a smaller and more efficient vibration unit).

Ex. 1003 ¶ 264. Moreover, Fukumoto teaches that "[a]lternatively [to vibration towards the screen surface], the housing of the electronic device is made to vibrate." Ex. 1010, code (57). Fuller's housing-parallel vibration direction also vibrates the housing of a device. Ex. 1010 ¶ 5. Although Fukumoto's Figure 3 embodiment does show vibration towards the screen, Petitioner does not rely on that direction of vibrational motion for teaching claim 1 because claim 1 does not require any particular vibration direction.

In view of the foregoing, the record does not reflect that vibrational direction considerations would deter a person having ordinary skill in the art from applying Fuller's vibrator as an alternative to Fukumoto's vibrator. Rather, the record reflects similarities between Fuller's vibrator and Fukumoto's vibrator that support Petitioner's assertion that use of Fuller's vibrator in Fukumoto's device would have amounted to simple substitution of known components of a linear vibration actuator. "There is a motivation to combine when a known technique 'has been used to improve one device, and a person of ordinary skill in the art would recognize that it would

improve similar devices in the same way,' using the 'prior art elements according to their established functions.'" *Intel Corp. v. PACT XPP Schweiz AG*, 61 F.4th 1373, 1380–81 (Fed. Cir. 2023) (citations omitted) (quoting *KSR*, 550 U.S. at 417; *Intel Corp. v. Qualcomm Inc.*, 21 F.4th 784, 799–800 (Fed. Cir. 2021)). Consequently, we determine that Petitioner has persuasively shown motivation to combine Fuller and Fukumoto to teach the elements of claim 8, and has shown, by a preponderance of the evidence, that claim 8 would have been obvious over the teachings of Fukumoto and Fuller.

6. Claims 7 and 8 over Fukumoto and Erixon

Petitioner provides a detailed analysis of the limitations of claims 7 and 8 and points to teachings in Fukumoto and Erixon as meeting each limitation. Pet. 56–64. Further, Petitioner provides a reason to combine Fukumoto and Erixon, and an explanation why a skilled person would reasonably expect success in such a combination. *Id.* at 59–60, 63–64. Patent Owner contests these assertions for the reasons set forth with respect to claim 1, and additionally, that motivation to combine Fukumoto and Erixon has not been established. PO Resp. 32–35.

Because we have determined that Fukumoto alone causes claim 7 to be unpatentable (*supra* § II(D)(3)(c)), and Fukumoto in view of Fuller causes claim 8 to be unpatentable, we need not further determine the dispute over claims 7 and 8 based upon the combined teachings of Fukumoto and Erixon.

7. Claims 14 and 19 over Fukumoto, Dong, and Ogusu

Petitioner provides a detailed analysis of the limitations of claims 14 and 19 and points to teachings in Fukumoto, Dong, and Ogusu as meeting each limitation. Pet. 66–70. Further, Petitioner provides a reason to

combine Fukumoto, Dong, and Ogusu, and an explanation why a skilled person would reasonably expect success in such a combination. *Id.* at 69. Patent Owner contends that Petitioner's assertions are unpersuasive because of the reasons set forth with respect to claim 1, and because the combined references have not been shown to teach "flux paths comprising a paramagnetic material that is shaped and positioned to reduce the reluctance of one or more magnetic circuits within the vibration module." PO Resp. 41 (citing Ex. 2008 ¶ 137).

a) Dong

Dong is a Chinese patent application publication titled "Flat Linear Vibration Motor," filed on February 20, 2009, and published on July 22, 2009. Ex. 1011, codes (12), (22), (43), (54). Dong states that the invention "relates to a vibration motor, and in particular to a flat linear vibration motor used in portable consumer electronic products." *Id.* at 3. Petitioner's reliance on Dong is based upon an assertion that Dong, published on July 22, 2009, is prior art to claims 14 and 19 because those claims are entitled to a priority date no earlier than January 6, 2012. Petitioner asserts that the subject matter of claims 14 and 19 first appeared, in the priority chain of applications to which the '830 patent claims the benefit, in the January 6, 2012, non-provisional application (Exhibit 1026), which was a continuation-in-part of a prior application. *Id.* at 67 (citing Ex. 1003 ¶ 271 ("Figures 24A, 24B, and 25 as well as their associated description (*'830 Pat.* 14:3–14:58) appear to be the only potential written description support . . . these figures and associated description were not present in the May 18, 2009 provisional (Ex. 1029) or May 18, 2010 non-provisional (Ex. 1028)."). Patent Owner does not comment on this assertion. Based on the complete trial record, we

acknowledge Dr. Wolfe's testimony, and determine that Dong has been shown to be prior art to claims 14 and 19.

Dong's Figure 5 (reproduced below) is a cross-sectional view of a flat linear vibration motor:

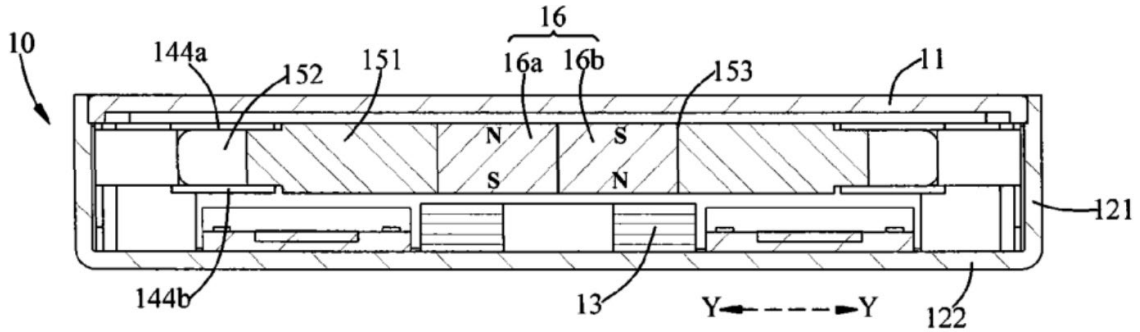

FIG. 5

Figure 5 illustrates flat linear vibration motor 10 with permanent magnet 16 positioned within through hole 153 in counterweight 15. Ex. 1011, 6, Fig. 5. Figure 5 also illustrates permanent magnet 16 magnetized such that the "magnetic poles of its one half (labeled 16a) are polarized opposite to magnetic poles of the other half (labeled 16b), and magnetic pole planes of the permanent magnet 16 are parallel to the bottom wall 122 of the base 12 (also parallel to the coil 13)." *Id.* at 6.

b) Ogusu

Ogusu is a Japanese patent application publication titled "Vibration Actuator," filed on January 12, 1995, and published on July 30, 1996. Ex. 1015, codes (12), (22), (43), (54). Ogusu states that the invention "relates to a moving magnet-type vibration actuator, and more particularly to a moving magnet-type vibration actuator having low loss and high efficiency." *Id.* ¶ 1; *see id.* ¶ 47. Ogusu's Figure 1 (reproduced below) is a cross-sectional view of a vibration actuator:

[FIG. 1]

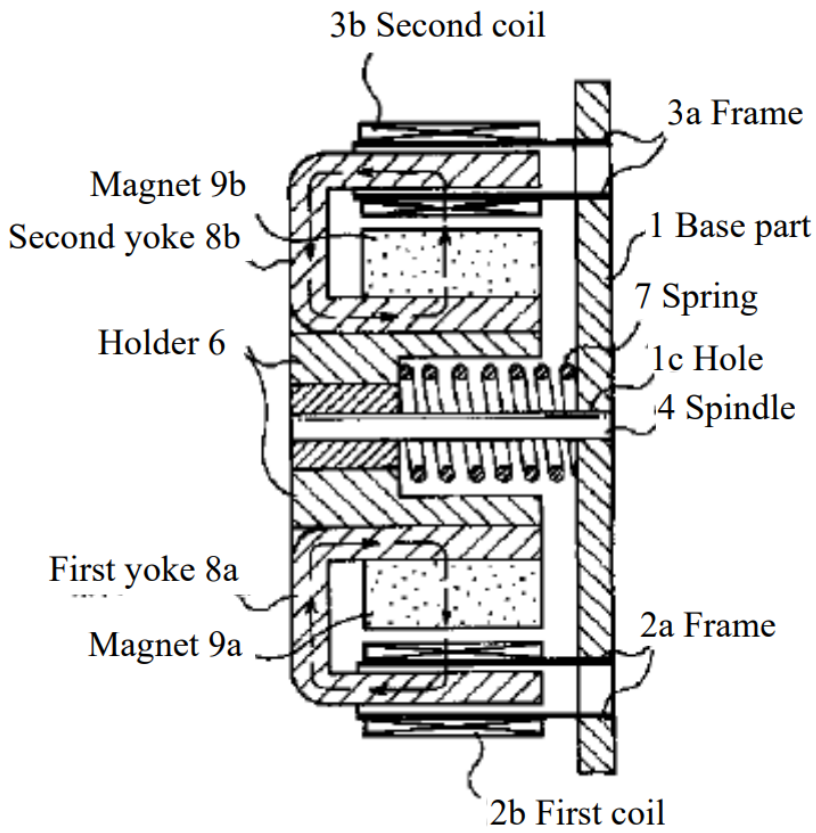

Figure 1 illustrates a vibration actuator including base part 1, frame 2a fixed at one end to base part 1, first coil 2b wound around frame 2a, frame 3a fixed at one end to base part 1, second coil 3b wound around frame 3a, spindle 4 mounted in hole 1c in base part 1, bearing 5 (not labeled in Figure 1) arranged around an end of spindle 4, holder 6 connected to bearing 5 and movable with bearing 5 in an axial direction along spindle 4, spring 7 to maintain holder 6 in a predetermined position when holder 6 does not vibrate, first yoke 8a "composed of a plate-shaped magnetic body" and mounted on holder 6 with one end part forming a core for first coil 2b and the other end part positioned opposite to a side surface of first coil 2b, second yoke 8b "composed of a plate-shaped magnetic body" and mounted on holder 6 with one end part forming a core for second coil 3b and the other

end part positioned opposite to a side surface of second coil 3b, first magnet 9a arranged on first yoke 8a opposite to a side surface of first coil 2b; and second magnet 9b arranged on second yoke 8b opposite to a side surface of second coil 3b. Ex. 1015 ¶¶ 24–29, Fig. 1. As shown by the broken lines representing magnetic flux in Figure 1, the vibration actuator forms two magnetic circuits as follows: (1) "the magnet opposing the first coil - the first coil - the first yoke" and (2) "the magnet opposing the second coil - the second coil - the second yoke." *Id.* ¶ 30, Fig. 1; *see id.* ¶¶ 16, 36.

c) Claim 14

Petitioner asserts that claim 14 is taught by a combination in which paramagnetic materials would be incorporated into Fukumoto's vibration actuator to reduce the reluctance of a magnetic circuit based on the teachings of Dong and Ogusu. Pet. 68. Petitioner asserts that a person having ordinary skill would have recognized numerous ways in which paramagnetic materials could be configured in Fukumoto's actuator to decrease reluctance, which would result in greater vibrational force using less power; i.e., increased efficiency. *Id.* at 68–69 (citing Ex. 1003 ¶¶ 272–273).

Petitioner asserts that Dong teaches a paramagnetic tungsten counterweight, and that a person having ordinary skill in the art would have understood that "adding a paramagnetic material (e.g., tungsten) to Fukumoto's vibration module (as taught in Dong) would reduce reluctance of the magnetic circuits in Fukumoto's vibration actuator." Pet. 69 (citing Ex. 1003 ¶ 274). Petitioner asserts that such a modification would have resulted in increased efficiency and only required minor changes to Fukumoto's structure. *Id.* (citing Ex. 1003 ¶ 275).

Petitioner relies upon Ogusu to "further support the modification" of Fukumoto with Dong's paramagnetic material. Pet. 69. Petitioner asserts

that Ogusu uses a mixture of ferromagnetic and non-ferromagnetic materials that would reduce the reluctance of magnetic circuits in the same way as a paramagnetic material because both "have weak magnetic attraction." *Id.* at 69–70 (citing Ex. 1003 ¶ 276). In support of that assertion, Petitioner points to the '830 patent, which states, "[p]aramagnetic materials . . . reduce the reluctance of a magnetic circuit and can therefore allow a magnetic field to more efficiently perform more work." *Id.* at 69–70 (citing Ex. 1001, 14:10–19). Petitioner also points to Ogusu's teachings that each of its yokes form "the magnetic loop having the shortest path" as supporting the incorporation of known paramagnetic materials into Fukumoto's actuator to reduce the reluctance and thereby improve efficiency. *Id.* at 70 (citing Ex. 1003 ¶¶ 276–277).

Patent Owner contends that the combination does not teach "flux paths comprising a paramagnetic material that is shaped and positioned to reduce the reluctance of one or more magnetic circuits within the vibration module." PO Resp. 41 (citing Ex. 2008 ¶ 137). Patent Owner first argues that any teachings of magnetic properties in the Petition is based upon Ogusu, which is relevant only to ferromagnetic materials in conjunction with nonmagnetic materials to form a "yoke." *Id.* at 43 (citing Pet. 3, 67–70). Patent Owner argues that this disclosure does not teach the use of paramagnetic materials. *Id.* (citing Ex. 2008 ¶ 149). Patent Owner highlights Dr. Goossen's testimony, allegedly confirmed by Dr. Wolfe, that paramagnetic materials are characterized by temporary magnetization as compared to the permanent magnetization of ferromagnetic materials. *Id.* at 41–42 (citing Ex. 2008 ¶ 138; Ex. 2010, 77:17–78:3). According to Patent Owner, however, "a mix of ferromagnetic and nonmagnetic materials does

not produce a paramagnetic material." *Id.* at 43 (citing Ex. 2008 ¶ 149). Patent Owner argues that because Ogusu does not relate to paramagnetic materials, Ogusu cannot provide any motivation for a person having ordinary skill in the art to incorporate paramagnetic materials as asserted by Petitioner. *Id.*

The record supports Patent Owner's position that Ogusu does not provide teachings that would support combining Fukumoto and Dong. Petitioner relies on Ogusu's "magnetic loop having the shortest path" to provide an increase in efficiency. Pet. 70 (citing Ex. 1003 ¶¶ 276–277). Yet Ogusu does not relate its "shortest path loop" to a paramagnetic material, or to the presence of any particular material added for the purpose of reducing magnetic reluctance. Ogusu teaches that its efficiency advantages accrue *regardless of whether its yokes are ferromagnetic or a mixture of ferromagnetic and non-ferromagnetic materials*. *Id.* ¶ 28. Instead, Ogusu's "shortest path" results from its particular "C-shape" of its yokes in which "the magnet and yoke are integrated in each magnetic circuit, so that no non-excitation holding force is exerted." *See* Ex. 1015, Fig. 1, ¶¶ 13, 16, 18, 20, 22, 47. Thus, Ogusu does not teach any efficiency gains resulting specifically from paramagnetic (or lower-magnetic) materials that would lead towards incorporation of paramagnetic materials in a vibrating oscillator.

Petitioner states that "Dr. Goossen admitted that the ferromagnetic materials in Ogusu's yoke would decrease reluctance," but this merely relates to a property of ferromagnetic materials. Pet. Reply 10 (citing Ex. 1048, 104:3–6). Also, this statement does not indicate that paramagnetic materials used in other configurations different from the integrated magnet and yoke configurations of Ogusu would decrease reluctance. Moreover,

Petitioner here relies on Dr. Goossen's statements rather than the disclosure of Ogusu. Dr. Goossen's statements do not indicate that Ogusu teaches advantages of paramagnetic materials used in a vibrating oscillator, only that Dr. Goossen is aware of reluctance-reducing properties of ferromagnetic materials. Thus, Dr. Goossen's statements do not support Petitioner's assertion that Ogusu teaches reluctance-reducing advantages of paramagnetic materials.

Similarly, Petitioner's reliance on Dr. Goossen's testimony and Dr. Wolfe's testimony for the well-known properties of paramagnetic materials and their usefulness in magnetic circuits is an expression of the knowledge in the art, and not for interpreting Ogusu, which does not mention paramagnetic materials. Pet. Reply 11 (citing Ex. 1003 ¶ 274; Ex. 2008 ¶ 138; Ex. 1048, 100:2-25, 102:15–103:5). Petitioner confirms that it is the knowledge in the prior art, not any teaching of Ogusu, that would motivate a person having ordinary skill in the art to incorporate Dong's tungsten into Fukumoto to reduce magnetic reluctance. Pet. Reply 11–12 ("In light of POSITAs' understanding of the benefits of reducing magnetic reluctance and the option of using paramagnetic materials to achieve that goal, POSITAs would have been motivated to incorporate at least Dong's tungsten components into the Fukumoto motor to reduce magnetic reluctance."). Consequently, we agree with Patent Owner that Ogusu does not provide a person having ordinary skill in the art with any identifiable reason to combine a paramagnetic counterweight (as in Dong) with Fukumoto's vibrating oscillator.

With respect to the Petition's reliance on Dong for a reason to combine Dong with Fukumoto, Patent Owner argues that although Dong teaches the use of a paramagnetic (tungsten) counterweight, Dong does not

teach that the paramagnetic counterweight is used as part of a magnetic circuit. PO Resp. 44 (citing Ex. 2008 ¶ 140 (noting that Dong's magnetic field lines do not reach the counterweight)). Patent Owner relies upon Dr. Goossen's testimony that a person having ordinary skill in the art would recognize that the physical motion of the counterweight does not create magnetic fields, and that the lack of fields illustrated in the counterweight does not support Petitioner's assertion that the counterweight "directs current paths to create magnetic forces." *Id.* (citing Ex. 1003 ¶ 109; Ex. 2008 ¶¶ 140–141).

Patent Owner further argues that a person having ordinary skill in the art would not know how to combine the paramagnetic counterweight of Dong with the device of Fukumoto to reduce reluctance in the claimed manner. PO Resp. 45–46. Patent Owner argues that a person having ordinary skill in the art would recognize that incorporation of a paramagnetic mass into Fukumoto's design would require a careful analysis, and if done incorrectly, could increase reluctance rather than reduce it. *Id.* at 45 (citing Ex. 2008 ¶ 145). Patent Owner argues that neither Fukumoto nor Dong teaches how to achieve reduced reluctance. *Id.* at 45–46 (citing Ex. 2008 ¶ 145). Patent Owner argues that Ogusu's teachings are not helpful because they do not address paramagnetic materials. *Id.* at 46.

The record supports Patent Owner's arguments. Petitioner asserts that "POSITAs would have understood from Dong's configuration that this placement of paramagnetic materials would reduce magnetic reluctance." Pet. Reply 13 (citing Ex. 1003 ¶ 274; Ex. 2010, 82:24-83:12). However, this merely indicates that Dong's counterweight would have reluctance-reducing properties, not that Dong indicates that its configuration of paramagnetic materials above and below an oscillating magnet would be

beneficial for any other purpose than providing a counterweight that in Dong's viewpoint "functions to strengthen the vibrating force." Ex. 1011, 6. As with Ogusu, any reason to apply Dong's tungsten counterweight to reduce magnetic reluctance is found in the alleged knowledge in the prior art, not in Dong.

To the extent that the Petition relies on knowledge in the art, it relies on the '830 patent itself. *Id.* Petitioner is not relying on the '830 patent for summaries of what was known in the prior art (i.e., that free air increases magnetic reluctance), but for the inventive properties of the '830 patent (i.e., that introducing paramagnetic materials that decrease the portion of magnetic lines passing through free air provide a more efficient linear vibration module). *Id.* at 67–68 (citing Ex. 1001, 14:7–10, 14:13–35). Although Petitioner relies on the testimony of Dr. Wolfe that the knowledge in the art supports adding paramagnetic materials shaped to lower reluctance in a magnetic circuit, Dr. Wolfe in turn relies on the same disclosures of the '830 patent. Ex. 1003 ¶¶ 272–273 (citing Ex. 1001, 14:7–10, 14:13–35). Although Dr. Wolfe states that "a POSITA would have been motivated to use paramagnetic materials in [Fukumoto] because decreasing reluctance would increase efficiency," Dr. Wolfe's only basis for concluding that efficiency would be increased is his citation to the '830 patent. *Id.* ¶¶ 272–275. Clearly, it is improper to determine that the '830 patent claims would have been obvious because of the teachings of only the '830 patent itself. *See Graham*, 383 U.S. at 36 ("resist the temptation to read into the prior art the teachings of the invention in issue").

Consequently, Petitioner has identified no reason why a person having ordinary skill in the art would have expected an increase in efficiency by

adding Dong's counterweights to Fukumoto except that improperly taken from the '830 patent itself.

Moreover, Petitioner's citation to *ZyXEL* is inapposite. Pet. Reply 13 (citing *ZyXEL Comms. Corp. v. UNM Rainforest Innovations*, 104 F.4th 1368, 2024 WL 3489577 (Fed. Cir. 2024)). Petitioner argues that *ZyXEL* requires only that "a [person of ordinary skill in the art] recognize" that application of reference's teachings are beneficial to provide sufficient motivation. *Id.* (citing *ZyXEL*, 104 F.4th at 1380). Petitioner argues that under *ZyXEL*, "regardless of whether Dong explicitly discloses the reluctance-reducing properties of its design, POSITAs would have understood the effect of Dong's paramagnetic counterweight on magnetic reluctance." *Id.*

However, the question is not whether one would have recognized the effect of Dong's counterweight on reluctance, which is supported by the record and not at issue. The issue is whether a person having ordinary skill in the art, aware of Dong's paramagnetic counterweight, would have found it beneficial to apply the counterweight to vary Fukumoto's magnetic reluctance so as to increase Fukumoto's efficiency. As discussed above, the record does not reflect that a person of ordinary skill in the art would have recognized the efficiency-gaining advantages of using a paramagnetic material to vary Fukumoto's reluctance, except by reading the '830 patent.

It should be emphasized here that Petitioner is not asserting that a person of ordinary skill in the art would have modified Fukumoto with Dong's tungsten counterweight to achieve the advantages of a counterweight (e.g., added mass that strengthens the vibration), and in doing so, also varied the magnetic reluctance in a beneficial way because of the undisputed properties of tungsten. *See* Ex. 1011, 6 ("The counterweight 15 functions to

strengthen the vibrating force, making the vibration stronger"). And any such assertion would have required an explanation of why fashioning tungsten to perform a counterweight in Fukumoto would have caused the tungsten to also be "shaped and positioned to reduce the reluctance" of Fukumoto. Absent comparison to the inventive Figure 24B of the '830 patent and its accompanying description, Petitioner has not explained why a person of ordinary skill in the art would recognize Dong's configuration of Figures 5–7 to be shaped and positioned so as to reduce reluctance rather than to strengthen the vibrating force such that it would advantageously be applied to reduce reluctance of other oscillating vibrators such as in Fukumoto.

In view of the foregoing, we determine that Petitioner has not shown by a preponderance of the evidence that claims 14 and 19 are unpatentable under § 103(a) based upon Fukumoto, Dong, and Ogusu.

8. Claims 15 and 20 over Fukumoto and Saiki

Petitioner provides a detailed analysis of the limitations of claims 15 and 20 and points to teachings in Fukumoto and Saiki as meeting each limitation. Pet. 70–72. Further, Petitioner provides a reason to combine Fukumoto and Saiki, and an explanation why a skilled person would reasonably expect success in such a combination. *Id.* at 71–72. Patent Owner does not provide any additional reasons why Petitioner's assertions are unpersuasive.

Because we have determined that Fukumoto alone causes claims 15 and 20 to be unpatentable (*supra* § II(D)(3)(f)), we need not further determine the dispute over claims 15 and 20 based upon the combined teachings of Fukumoto and Saiki.

9. Claim 16 over Fukumoto, Saiki, and Masahiko

Petitioner provides a detailed analysis of the limitations of claim 16, points to teachings in Fukumoto, Saiki, and Masahiko as meeting each limitation, provides a reason to combine Fukumoto, Saiki, and Masahiko, and provides an explanation why a person skilled in the art would reasonably expect success in such a combination. Pet. 72–75. Patent Owner argues that the combined teachings of Fukumoto, Saiki, and Masahiko do not teach "a primary oscillation frequency modulated by a modulating oscillation frequency." PO Resp. 48–51.

a) Saiki

Saiki is titled "Driving Circuit, Electro-Mechanical-Acoustic Transducer, and Portable Terminal Apparatus." Ex. 1013, code (54). Saiki relates to a driving circuit for driving a vibrator at a resonance frequency in which at least two signals of different frequencies are included in a frequency range including the resonance frequency. *Id.* at code (57). In one embodiment, the signal provided to the vibrator may be "a synthesized signal obtained by adding together the first signal and the second signal while shifting a phase of the first signal and a phase of the second signal from each other." *Id.* at 2:27–32.

b) Masahiko

Masahiko is titled "Vibration Generating Apparatus." Ex. 1014, code (54). Masahiko relates to a vibration generating apparatus which "utilizes a beat vibration, so it is possible to provide a vibration generating apparatus which is high in yield, low in cost, and able to exhibit a vibration tactile haptic effects even if there are variations in the natural frequency of the mechanical vibrator." *Id.* at 4:41–46. The beat vibration is generated by a drive voltage frequency that "a non-resonant frequency out of a damped

natural frequency 'f_d' of the mechanical vibrator." *Id.* at 2:6–8. The drive voltage is controlled by a forced vibration control unit to stop application of the drive voltage, "in a beat wave defining an amplitude of the beat vibration, at a second valley part after a first peak part from the side of the drive start." *Id.* at 2:8–12.

Petitioner's reliance on Masahiko is based upon an assertion that Masahiko, filed on July 6, 2011, is prior art to claim 16 because it is entitled to a priority date no earlier than January 6, 2012. *Id.* at 72. Petitioner asserts that the subject matter of claim 16 first appeared, in the priority chain of applications to which the '830 patent claims the benefit, in the January 6, 2012 non-provisional application (Exhibit 1026), which was a continuation-in-part of a prior application. *Id.* (citing Ex. 1003 ¶ 287 ("Figures 22B and 23 and the description at 13:34–59 appear to be the only possible written description support . . . th[ese] figures and associated description were not present in the May 18, 2009 provisional (Ex. 1029) or May 18, 2010 non-provisional (Ex. 1028)."). Patent Owner does not comment on this assertion. PO Resp. 48–51. Based upon the complete trial record, we determine that Masahiko has been shown to be prior art to claim 16.

c) Claim 16

Claim 16 depends from claim 15, and further recites, "wherein the complex vibration modes include: a primary oscillation frequency modulated by a modulating oscillation frequency; a beat frequency; and an aperiodic oscillation waveform."

Petitioner asserts that Masahiko teaches a beat frequency. Pet. 73 (citing Ex. 1014, 12:55–56, Fig. 5; Ex. 1003 ¶ 293). Petitioner asserts that Masahiko teaches an aperiodic oscillation waveform by its "changing 'period spikes' in the total energy of a system driven by a pure sine wave

that eventually reaches steady state, but other bipolar, square-based waves used as drive signals continue to change the excitation and dampening phases to change in a non-repetitive, gradual manner." *Id.* (citing Ex. 1014, Fig. 6, 14:26–53, Figs. 15–16, 22:56–23:59; Ex. 1003 ¶ 296). Petitioner asserts that Masahiko's particular beat and aperiodic waveforms would allow for more abrupt start and stop of the vibrations felt by a user of a mobile device. *Id.* (citing Ex. 1014, 2:13–47, 4:40–46, 10:7–10, 12:55–61; Ex. 1003 ¶ 288). Petitioner asserts that only minor software modifications would be needed to provide for the complex vibration waveforms, such that a person having ordinary skill in the art would have a reasonable expectation of success. *Id.* at 75 (citing Ex. 1003 ¶ 289). Petitioner further asserts,

> the proposed combination would have amounted to no more than applying a known technique (Masahiko's beat frequency and aperiodic oscillation) to a known device ready for improvement (the Fukumoto-Saiki combination's mobile device including a linear oscillatory actuator) to yield predictable results (a linear oscillatory actuator that generates a beat wave frequency to stop voltage application—and thereby vibration generation—abruptly, as well as an aperiodic waveform).

Id. at 74 (citing Ex. 1003 ¶ 288).

Patent Owner does not specifically contest Petitioner's assertions against Masahiko. We determine that these assertions are supported by the record.

Petitioner asserts that Saiki teaches a primary oscillation frequency P1 and a modulating oscillation frequency P2. Pet. 73 (citing Ex. 1013, Figs. 17A–B). Petitioner asserts that a person having ordinary skill in the art "would have understood that P1 is modulated by P2 because P1 is in reverse phase with P2." *Id.* (citing Ex. 1013, 15:24–37; Ex. 1003 ¶ 292). Petitioner asserts that applying Saiki's complex vibration modes in Fukumoto's mobile

device would have been recognized as advantageous by a person having ordinary skill in the art because it would allow for greater flexibility and variety of available vibration waveforms. *Id.* at 71–72. Petitioner asserts that a person having ordinary skill in the art

> would have recognized that the proposed combination would have amounted to no more than applying a known technique (Saiki's frequency signal synthesis) to a known device ready for improvement (Fukumoto's mobile device including its linear oscillatory actuator and drive signal generation circuit) to yield predictable results (creating additional vibration output options).

Pet. 71 (citing Ex. 1003 ¶ 281).

Patent Owner argues that the claimed "modulated by" term would have been understood by one having ordinary skill in the art, in light of the specification of the '830 patent, to refer to "one signal that is mixed or multiplied by another signal, as in amplitude modulation (AM), frequency modulation (FM), phase modulation (PM), etc." PO Resp. 49 (citing Ex. 1008 ¶ 158, Ex. 1001, 13:41–46 "modulation produces 'low-frequency pulses of high-frequency vibration.'"). Patent Owner argues that Saiki teaches that P1 and P2 are being added, which is not the same as modulating because "modulating would produce multiple tones which are the sum and difference of the two multiplied signals." *Id.* at 49–50 (citing Ex. 2008 ¶ 158 (citing Ex. 1013, 14:47–57)). Patent Owner further argues that Saiki's purpose of maintaining a large vibration force is different from the '830 patent's purpose of producing "interesting vibrational modes" such as "low-frequency pulses of high-frequency vibration." *Id.* (citing Ex. 1001, 13:27, 13:41–46, Fig. 22B; Ex. 1013, 15:21–23).

Responding to Patent Owner's argument, Petitioner asserts that the '830 patent describes more types of frequency modulation than the single

one relied upon by Patent Owner. Pet. Reply 26–27 (citing Ex. 1001, 13:20–59). Petitioner further argues that although Patent Owner states that the '830 produces "interesting" vibrational modes, Patent Owner does not explain why Saiki's modes would not have been considered "interesting." *Id.* at 27. Petitioner further relies on Dr. Wolfe's testimony that the combined signal of Figure 17A of Saiki is "remarkably similar" to the "interesting" waveform of Figure 22B of the '830 patent. *Id.* at 27–28 (citing Ex. 1047 ¶ 5). Petitioner further asserts that Dr. Goossen's examples of "frequency modulation (FM)" and "phase modulation (PM)" do not mix or multiply signals. *Id.* at 28 (citing Ex. 1047 ¶ 10).

In its Sur-reply, Patent Owner points to two dictionary definitions relied upon by Dr. Wolfe in his supplemental declaration. PO Sur-reply 19–21. In one definition, "modulation" is defined as "the variation of some characteristic of a carrier"; in another, as "[t]o vary the amplitude, frequency, or some other characteristic of a signal or power source." *Id.* at 19–20 (citing Ex. 1049, 4; Ex. 1050, 4). Patent Owner argues that simply adding two frequencies does not satisfy these definitions. *Id.*

We are persuaded by Petitioner's assertions that Saiki teaches "a primary oscillation frequency modulated by a modulating oscillation frequency." The dictionaries that Dr. Wolfe relies upon define modulation of a signal as varying some characteristic of that signal. Ex. 1049, 4; Ex. 1050, 4; *see* Ex. 1047 ¶¶ 7–8. We agree with Petitioner that the record reflects that a characteristic of a signal may be varied by adding a second value, such as a second signal, thereto. Dr. Goossen states that in the context of the '830 patent, "modulation refers to mixing or multiplying one signal with another." Ex. 2008 ¶ 158. Dr. Goossen states that such mixing or multiplying may result in "tones which are the sum and difference" of the

signals. *Id.* Dr. Goossen's testimony that modulating may be "mixing" signals resulting in a mixed signal that is the "sum and difference" of the original signals further supports Petitioner's application of Saiki's use of two signals that are "obtained by adding together the first signal and the second signal while shifting a phase of the first signal and a phase of the second signal from each other." Ex. 1013, 2:27–32. Because the record reflects a meaning of "modulated by" that includes a signal that is varied by or mixed with a second signal, we find that Saiki teaches a signal that is modulated by a second signal.

In view of the foregoing, we determine that Petitioner has proven, by a preponderance of the evidence, that each element of claim 16 has been taught or suggested by Fukumoto in view of Masahiko.

E. Obviousness over Fukumoto-Grant, and Fukumoto-Barton

Petitioner further asserts that each of the above-discussed asserted grounds would further have been obvious with the addition of either Grant or Barton. Pet. 35–45. We need not consider these further assertions with respect to claims 1, 2, 7, 8, 15–17, and 20, because we find Petitioner's assertions persuasive on the Fukumoto-based grounds.

With respect to claims 3–6, 9, 14, and 19, Petitioner does not assert that either Grant or Barton provides any teachings pertinent to the limitations added by those claims. Pet. 36 (relying on Grant for its "user-programmed haptic codes"), 37 (relying solely on Fukumoto for the additional limitations of claim 9), 44 (relying on Barton for its "user-programmed vibration patterns" and on Fukumoto for the additional limitations of claim 9), 66–67 (claims 14 and 19). Consequently, for the same reasons as expressed in the discussion of the Fukumoto-based grounds, we determine that Petitioner has not shown by a preponderance of evidence that claim 9 would have been

obvious over Fukumoto and either Grant or Barton, or that claims 14 and 19 would have been obvious over Fukumoto, Dong, Ogusu, and either Grant or Barton.

F. Obviousness over Ogusu and Fukumoto (and either Grant or Barton)

1. Claims 1, 2, 7, 11, 15, 17, and 20

Petitioner further asserts that its Fukumoto-based (by itself or with either Grant or Barton) assertions for claims 1, 2, 7, 11, 15, 17, and 20 would have been obvious with the addition of Ogusu. Pet. 75. Of these asserted claims, only claim 11 has not been found obvious over the Fukumoto-based grounds, and we need only address claim 11 in the Ogusu-Fukumoto ground. As an initial matter, the Ogusu-Fukumoto combination is based solely upon Ogusu for non-means-plus-function construction, and upon Ogusu in combination with Fukumoto for means-plus-function construction, to teach limitation [1f]. Pet. 82. Because we apply a means-plus-function construction for that limitation, we address only the Ogusu-Fukumoto combination for limitation [1f].

Petitioner asserts that Ogusu teaches the claim preamble, to the extent limiting, through Ogusu's use of a movable magnet as the claimed "vibration actuator" that is contained in the same overall module as its controller. Pet. 77–78 (citing Ex. 1015 ¶¶ 1–2, 31–32; Ex. 1003 ¶ 302). Petitioner asserts that Ogusu and Fukumoto teach limitation [1a] by modifying Ogusu's pager to including a housing for its vibration actuator such as taught by Fukumoto's case 115a. *Id.* at 78 (citing Ex. 1005, 1:13–19, 1:45–50, 13:20–26). Petitioner asserts that Ogusu teaches limitation [1b] through its movable element comprising holder 6, bearing 5, yokes 8a, 8b, and magnets 9a, 9b. *Id.* at 78–79 (citing Ex. 1015, Fig. 1).

Petitioner asserts that Ogusu teaches limitation [1c] through its input power supplied to the coil that requires a supply of electric power. *Id.* at 79–80 (citing Ex. 1015 ¶¶ 30–31, 57–58; Ex. 1003 ¶ 308). Petitioner asserts that Ogusu teaches limitation [1d] through Ogusu's user selection of the pager's vibrations in view of Fukumoto's touch panel and push button keys that permit a user to input operation instructions. *Id.* at 80 (citing Ex. 1003 ¶¶ 309–311; Ex. 1015 ¶ 43; Ex. 1005, 13:40–14:13, Fig. 12). Petitioner asserts that the combination teaches limitation [1e] through Ogusu's first and second coils 2b, 3b that drive the movable element in each of two opposite directions as the result of applied current and through Fukumoto's housing. *Id.* at 81 (citing Ex. 1015 ¶¶ 31–32; Ex. 1003 ¶¶ 312–315).

Petitioner asserts that Ogusu teaches the function of limitation [1f] through its pager control section from which a user selects between waveforms having different amplitudes and frequencies. *Id.* at 83–84 (citing Ex. 1015 ¶¶ 17, 19, 32, 37–42, 55; Ex. 1003 ¶¶ 310, 317–318). Petitioner asserts that Fukumoto teaches the corresponding structure. *Id.* at 85 (citing its Fukumoto discussion of limitation [1f]).

Petitioner asserts that it would have been obvious to one having ordinary skill in the art to combine the teachings of Ogusu and Fukumoto because "they are both directed to linear vibration generation in mobile devices" and would have recognized Ogusu lacks certain implementation details that were well known as shown in Fukumoto. *Id.* at 77 (citing Ex. 1003 ¶ 301; Ex. 1015 ¶¶ 1–2; Ex. 1005, Abstr., 37:5–12, Fig. 81).

Patent Owner argues that the Petitioner has not shown either Ogusu or Fukumoto to teach limitations [1c] and [1f]. PO Resp. 52–58. Patent Owner

argues that Petitioner has not shown claim 11 to have been obvious for the reasons as the references fail to render claim 1 obvious. *Id.* at 60.

We determine that Petitioner has shown each limitation of claims 1 and 11 to be taught by the combination of Ogusu and Fukumoto. Petitioner's uncontested assertions against claim 1's preamble and limitations [1a], [1b], [1d], [1e], and 11 are supported by the record. We further are persuaded by Petitioner's reasons to combine Ogusu and Fukumoto, and that such would have occurred with a reasonable expectation of success.

Petitioner's reliance on Ogusu for limitation [1c] is of similar nature as its reliance on Fukumoto; i.e., that both require a power supply to send power to the coil. *See supra* § II(D)(2)(b) ("Fukumoto's AC current in the form of a drive signal, for which a person having ordinary skill in the art would recognize as being supplied by a power supply"). Petitioner relies solely on Fukumoto for limitation [1f]. Because we have determined that Fukumoto teaches limitations [1c] and [1f], we find Patent Owner's arguments unavailing.

Consequently, we determine that Petitioner has shown, by a preponderance of the evidence, that claims 1 and 11 would have been obvious over Ogusu and Fukumoto.

2. Claims 3–6

Petitioner asserts that claims 3–6 would have been obvious over Ogusu and Fukumoto, Ogusu and Fukumoto and Grant, or Ogusu and Fukumoto and Barton. Pet. 92. Petitioner asserts that such obviousness is premised upon "the same analysis" presented in the non-Ogusu combinations. *Id.* As discussed for the means-plus-function analyses of those combinations, Petitioner did not, in its Petition, show that claim 3 (or

its dependent claims 4–6) would have been obvious by a preponderance of the evidence. *See* §§ II(D)(3), II(D)(4), II(E). Consequently, Petitioner has not shown by a preponderance of the evidence that claims 3–6 would have been obvious over Ogusu and Fukumoto, Ogusu and Fukumoto and Grant, or Ogusu and Fukumoto and Barton.

3. Claims 7 and 8

Petitioner asserts that claims 7 and 8 would have been obvious over Erixon in combination with Ogusu and Fukumoto, Ogusu and Fukumoto and Grant, or Ogusu and Fukumoto and Barton. Pet. 93. We do not reach this challenge to claims 7 and 8 because we have determined those claims are unpatentable based upon other challenges. *See* §§ II(D)(3)(c), II(D)(5).

III. CONCLUSION

Based on the evidence presented with the Petition, the evidence introduced during the trial, and the parties' respective arguments, Petitioner has shown by a preponderance of the evidence that:

(1) claims 1, 2, 7, 15, 17, and 20 are unpatentable under § 103(a) based on Fukumoto alone;

(2) claims 1 and 11 are unpatentable under § 103(a) based on Ogusu and Fukumoto;

(4) claim 8 is unpatentable under § 103(a) based on Fukumoto and Fuller; and

(5) claim 16 is unpatentable under § 103(a) based on Fukumoto, Saiki, and Masahiko.[10]

---

[10] Should Patent Owner wish to pursue amendment of the challenged claims in a reissue or reexamination proceeding after the issuance of this Final Written Decision, we draw Patent Owner's attention to the April 2019 Notice Regarding Options for Amendments by Patent Owner Through

Petitioner has not shown by a preponderance of the evidence that claims 3–6 are unpatentable under § 103(a) based upon Fukumoto, Fukumoto and Grant, Fukumoto and Barton, Ogusu and Fukumoto, Ogusu and Fukumoto and Grant, or Ogusu and Fukumoto and Barton. Petitioner has not shown by a preponderance of the evidence that claim 9 is unpatentable under § 103(a) based upon Fukumoto, Fukumoto and Grant, or Fukumoto and Barton. Petitioner has not shown by a preponderance of the evidence that claims 14 and 19 are unpatentable under § 103(a) based upon Fukumoto, Dong, and Ogusu, with or without either Grant or Barton.

Claim(s)	35 U.S.C. §	Reference(s)/Basis	Claims Shown Unpatentable	Claims Not Shown Unpatentable
1–3, 7–9, 15, 17, 20	103(a)	Fukumoto	1, 2, 7, 15, 17, 20	3, 8, 9
1–3, 7–9, 15, 17, 20	103(a)	Fukumoto, Grant[11]		3, 9
1–3, 7–9, 15, 17, 20	103(a)	Fukumoto, Barton[12]		3, 9
3–6	103(a)	Fukumoto, Ueda		3–6
3–6	103(a)	Fukumoto, Grant, Ueda		3–6
3–6	103(a)	Fukumoto, Barton,		3–6

Reissue or Reexamination During a Pending AIA Trial Proceeding. *See* 84 Fed. Reg. 16,654 (Apr. 22, 2019). If Patent Owner chooses to file a reissue application or a request for reexamination of the challenged patent, we remind Patent Owner of its continuing obligation to notify the Board of any such related matters in updated mandatory notices. *See* 37 C.F.R. §§ 42.8(a)(3), (b)(2).

[11] We do not reach this challenge for claims 1, 2, 7, 8, 15, 17, and 20 because we have determined those claims are unpatentable based upon other challenges.

[12] We do not reach this challenge for claims 1, 2, 7, 8, 15, 17, and 20 because we have determined those claims are unpatentable based upon other challenges.

Claim(s)	35 U.S.C. §	Reference(s)/Basis	Claims Shown Unpatentable	Claims Not Shown Unpatentable
		Ueda		
7–8	103(a)	Fukumoto, Erixon[13]		
7–8	103(a)	Fukumoto, Grant, Erixon[14]		
7–8	103(a)	Fukumoto, Barton, Erixon[15]		
8	103(a)	Fukumoto, Fuller	8	
8	103(a)	Fukumoto, Grant, Fuller[16]		
8	103(a)	Fukumoto, Barton, Fuller[17]		
14, 19	103(a)	Fukumoto, Dong, Ogusu		14, 19
14, 19	103(a)	Fukumoto, Grant, Dong, Ogusu		14, 19
14, 19	103(a)	Fukumoto, Barton, Dong, Ogusu		14, 19
15, 20	103(a)	Fukumoto, Saiki[18]		
15, 20	103(a)	Fukumoto, Grant, Saiki[19]		

[13] We do not reach this challenge to claims 7–8 because we have determined those claims are unpatentable based upon other challenges.
[14] We do not reach this challenge to claims 7–8 because we have determined those claims are unpatentable based upon other challenges.
[15] We do not reach this challenge to claims 3–6 because we have determined those claims are unpatentable based upon other challenges.
[16] We do not reach this challenge to claim 8 because we have determined that claim is unpatentable based upon other challenges.
[17] We do not reach this challenge to claim 8 because we have determined that claim is unpatentable based upon other challenges.
[18] We do not reach this challenge to claims 15 and 20 because we have determined those claims are unpatentable based upon other challenges.
[19] We do not reach this challenge to claims 15 and 20 because we have determined those claims are unpatentable based upon other challenges.

Claim(s)	35 U.S.C. §	Reference(s)/Basis	Claims Shown Unpatentable	Claims Not Shown Unpatentable
15, 20	103(a)	Fukumoto, Barton, Saiki[20]		
16	103(a)	Fukumoto, Saiki, Masahiko	16	
16	103(a)	Fukumoto, Grant, Saiki, Masahiko[21]		
16	103(a)	Fukumoto, Barton, Saiki, Masahiko[22]		
1, 2, 7, 11, 15, 17, 20	103(a)	Ogusu, Fukumoto[23]	1, 11	
1, 2, 7, 11, 15, 17, 20	103(a)	Ogusu, Fukumoto, Grant[24]		
1, 2, 7, 11, 15, 17, 20	103(a)	Ogusu, Fukumoto, Barton[25]		
3–6	103(a)	Ogusu, Fukumoto, Ueda		3–6
3–6	103(a)	Ogusu, Fukumoto, Grant, Ueda		3–6

[20] We do not reach this challenge to claims 15 and 20 because we have determined those claims are unpatentable based upon other challenges.
[21] We do not reach this challenge to claim 16 because we have determined that claim is unpatentable based upon other challenges.
[22] We do not reach this challenge to claim 16 because we have determined that claim is unpatentable based upon other challenges.
[23] We do not reach this challenge to claims 2, 7, 15, 17, and 20 because we have determined those claims are unpatentable based upon other challenges.
[24] We do not reach this challenge to claims 1, 2, 7, 11, 15, 17, and 20 because we have determined those claims are unpatentable based upon other challenges.
[25] We do not reach this challenge to claims 1, 2, 7, 11, 15, 17, and 20 because we have determined those claims are unpatentable based upon other challenges.

Claim(s)	35 U.S.C. §	Reference(s)/Basis	Claims Shown Unpatentable	Claims Not Shown Unpatentable
3–6	103(a)	Ogusu, Fukumoto, Barton, Ueda		3–6
7, 8	103(a)	Ogusu, Fukumoto, Erixon[26]		
7, 8	103(a)	Ogusu, Fukumoto, Grant, Erixon[27]		
7, 8	103(a)	Ogusu, Fukumoto, Barton, Erixon[28]		
Overall Outcome			1, 2, 7, 8, 11, 15–17, 20	3–6, 9, 14, 19

IV. ORDER

For the foregoing reasons, it is:

ORDERED that claims 1, 2, 7, 8, 11, 15–17, and 20 in the ’830 patent are determined to be unpatentable;

ORDERED that claims 3–6, 9, 14, and 19 in the ’830 patent are determined not to be unpatentable; and

FURTHER ORDERED that because this is a Final Written Decision, the parties to the proceeding seeking judicial review of the decision must comply with the notice and service requirements of 37 C.F.R. § 90.2.

[26] We do not reach this challenge to claims 7 and 8 because we have determined those claims are unpatentable based upon other challenges.
[27] We do not reach this challenge to claims 7 and 8 because we have determined those claims are unpatentable based upon other challenges.
[28] We do not reach this challenge to claims 7 and 8 because we have determined those claims are unpatentable based upon other challenges.

For PETITIONER:

Ali R. Sharifahmadian
Jin-Suk Park
Jeffrey A. Miller
ARNOLD & PORTER KAYE SCHOLER LLP
ali.sharifahmadian@arnoldporter.com
jin.park@arnoldporter.com
jmillerptab@apks.com

For PATENT OWNER:

Reza Mirzaie
Qi (Peter) Tong
Kristopher R. Davis
Neil A. Rubin
RUSS AUGUST & KABAT
rmirzaie@raklaw.com
ptong@raklaw.com
kdavis@raklaw.com
nrubin@raklaw.com

META-1056, p. 71
Meta v. Resonant
IPR2025-00823