US 20030025135A1

(19) United States

(12) Patent Application Publication

Matsumoto et al.

(10) Pub. No.: US 2003/0025135 A1

(43) Pub. Date: Feb. 6, 2003

(54) SEMICONDUCTOR DEVICE AND METHOD OF MANUFACTURING SAME

(75) Inventors: **Takuji Matsumoto**, Tokyo (JP); **Hirokazu Sayama**, Tokyo (JP); **Shigenobu Maeda**, Tokyo (JP); **Toshiaki Iwamatsu**, Tokyo (JP); **Kazunobu Ota**, Tokyo (JP)

Correspondence Address:
OBLON SPIVAK MCCLELLAND MAIER & NEUSTADT PC
FOURTH FLOOR
1755 JEFFERSON DAVIS HIGHWAY
ARLINGTON, VA 22202 (US)

(73) Assignee: **MITSUBISHI DENKI KABUSHIKI KAISHA**, Tokyo (JP)

(21) Appl. No.: **10/192,657**

(22) Filed: **Jul. 11, 2002**

(30) **Foreign Application Priority Data**

Jul. 17, 2001 (JP) P2001-216428

Sep. 28, 2001 (JP) P2001-299863

Publication Classification

(51) **Int. Cl.**[7] **H01L 29/76**; H01L 29/94; H01L 31/062; H01L 31/113; H01L 31/119

(52) **U.S. Cl.** **257/288**

(57) **ABSTRACT**

A semiconductor device which achieves reductions in malfunctions and operating characteristic variations by reducing the gain of a parasitic bipolar transistor, and a method of manufacturing the same are provided. A silicon oxide film **(6)** is formed partially on the upper surface of a silicon layer **(3)**. A gate electrode **(7)** of polysilicon is formed partially on the silicon oxide film **(6)**. A portion of the silicon oxide film **(6)** underlying the gate electrode **(7)** functions as a gate insulation film. A silicon nitride film **(9)** is formed on each side surface of the gate electrode **(7)**, with a silicon oxide film **(8)** therebetween. The silicon oxide film **(8)** and the silicon nitride film **(9)** are formed on the silicon oxide film **(6)**. The width **(W1)** of the silicon oxide film **(8)** in a direction of the gate length is greater than the thickness **(T1)** of the silicon oxide film **(6)**.

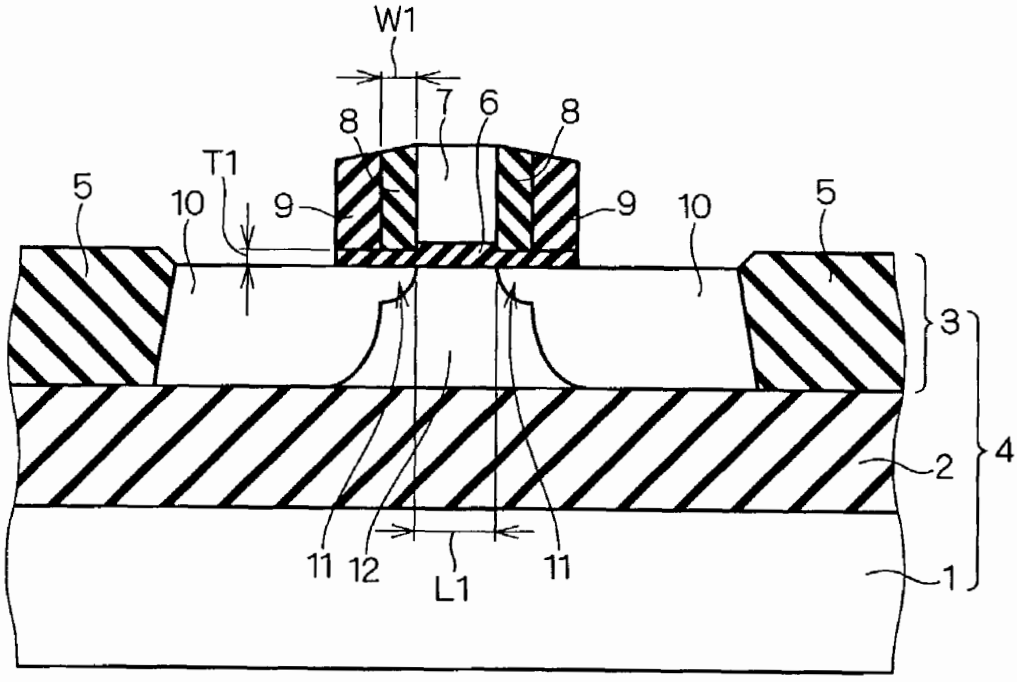

F I G . 1

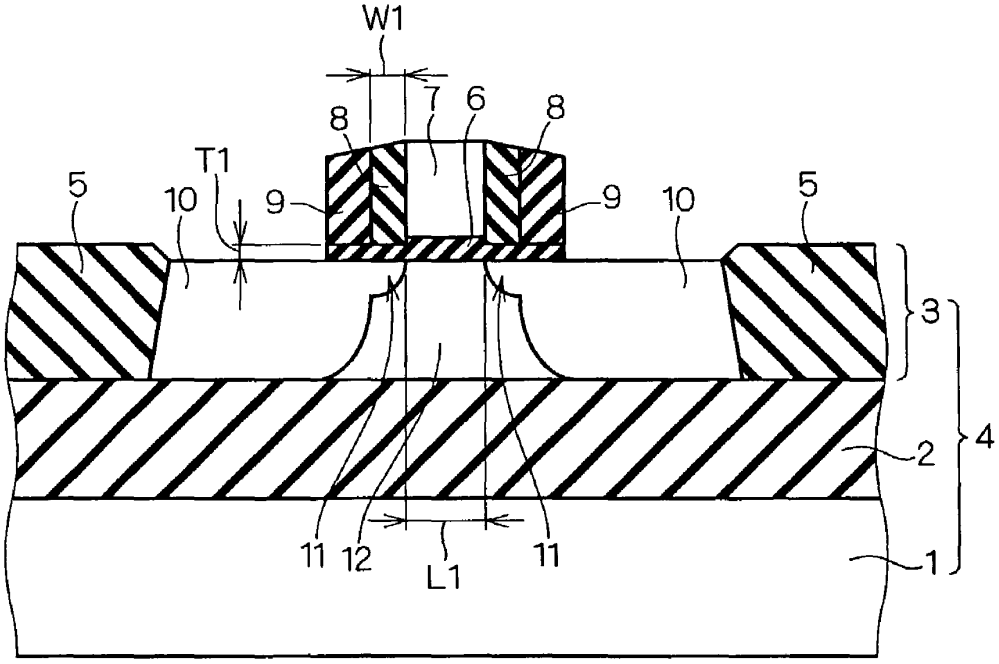

FIG. 2

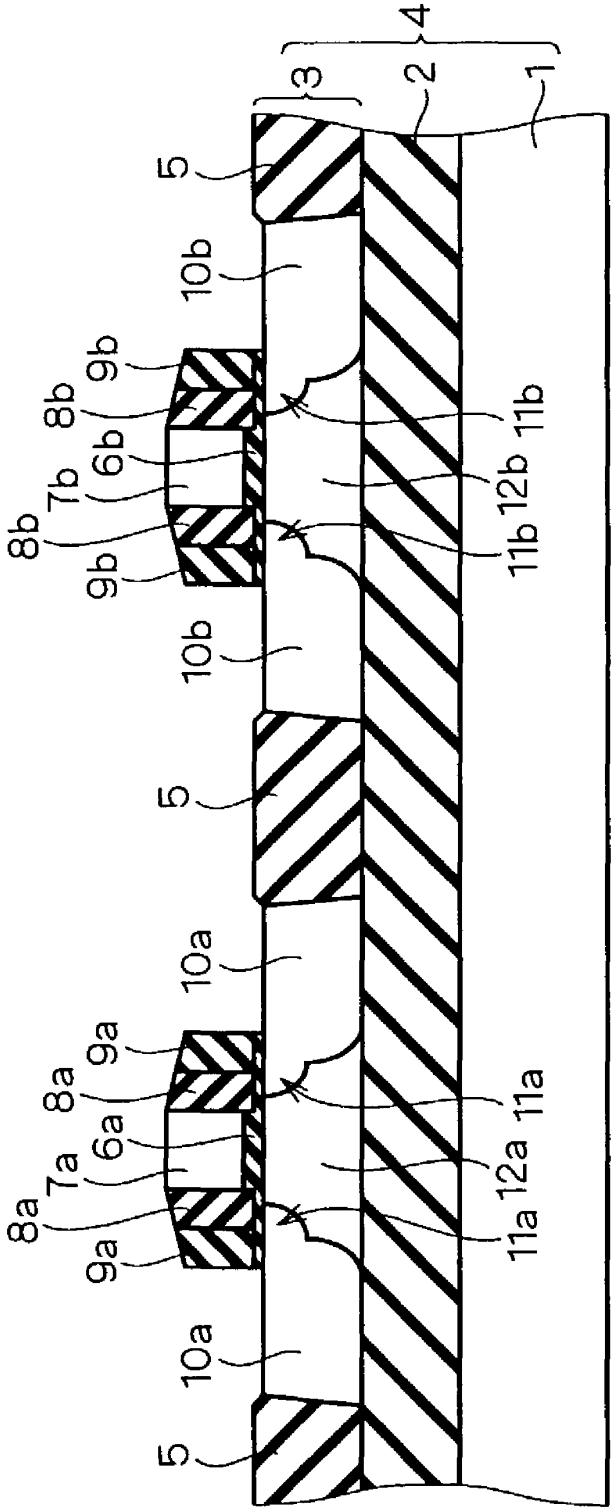
4
3
2
1
5
10b
9b
8b
6b
7b
8b
9b
10b
5
10a
9a
8a
6a
7a
8a
9a
10a
5
11b
12b
11b
11a
12a
11a

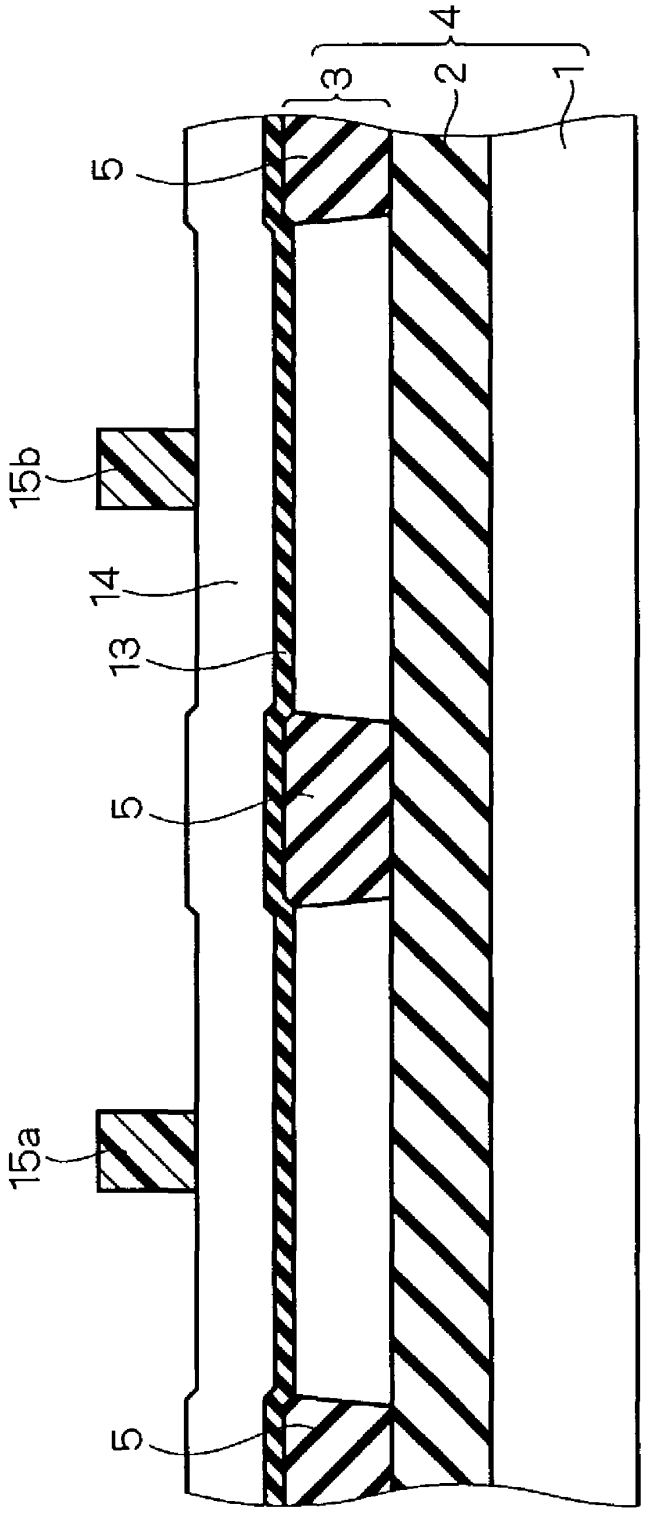

FIG. 3

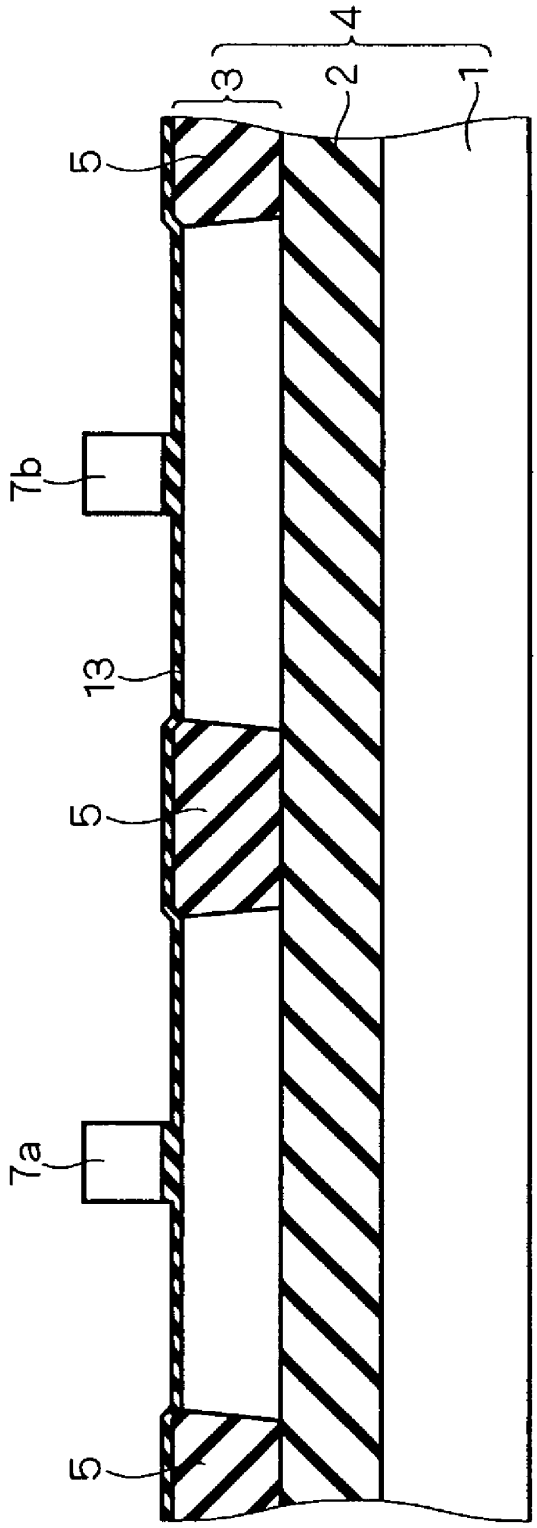

FIG. 4

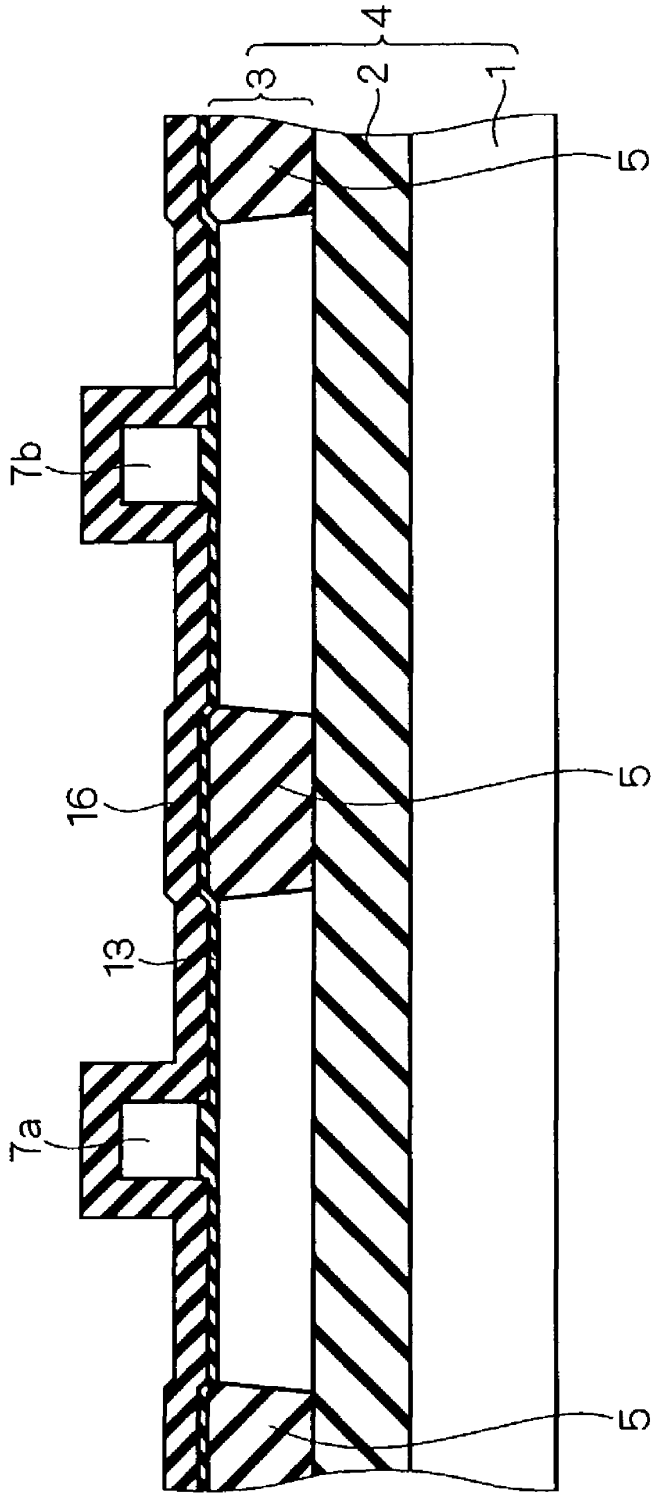

FIG. 5

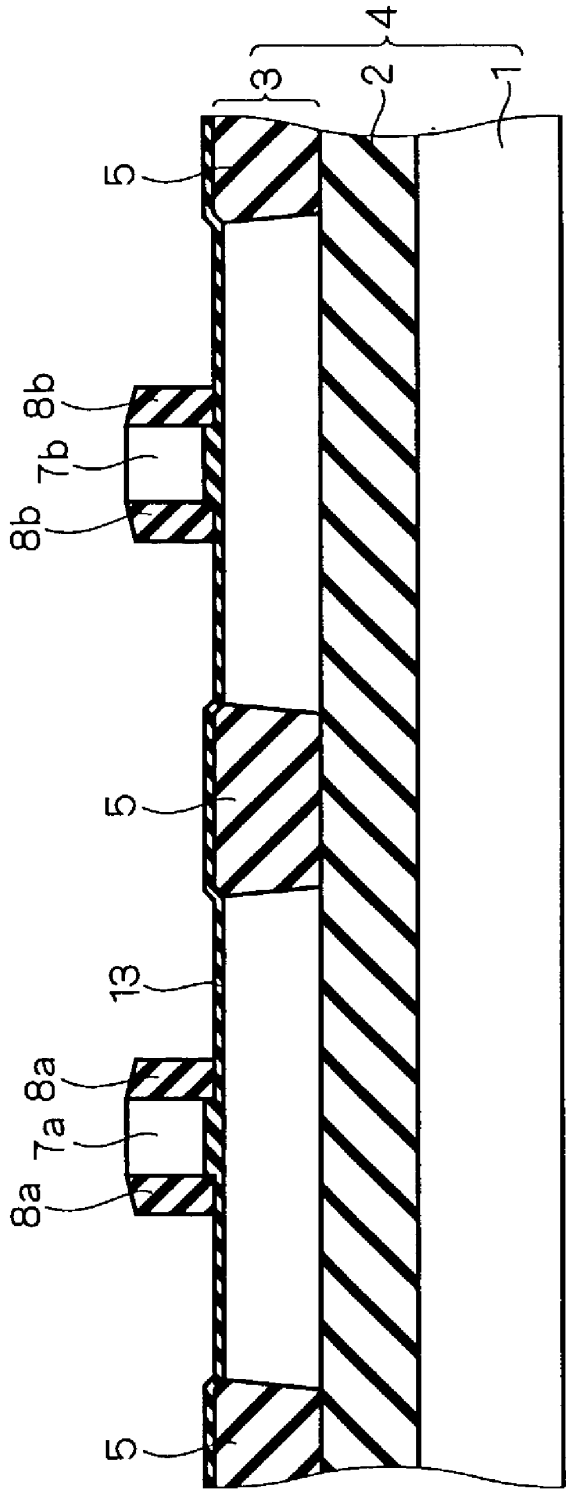

FIG. 6

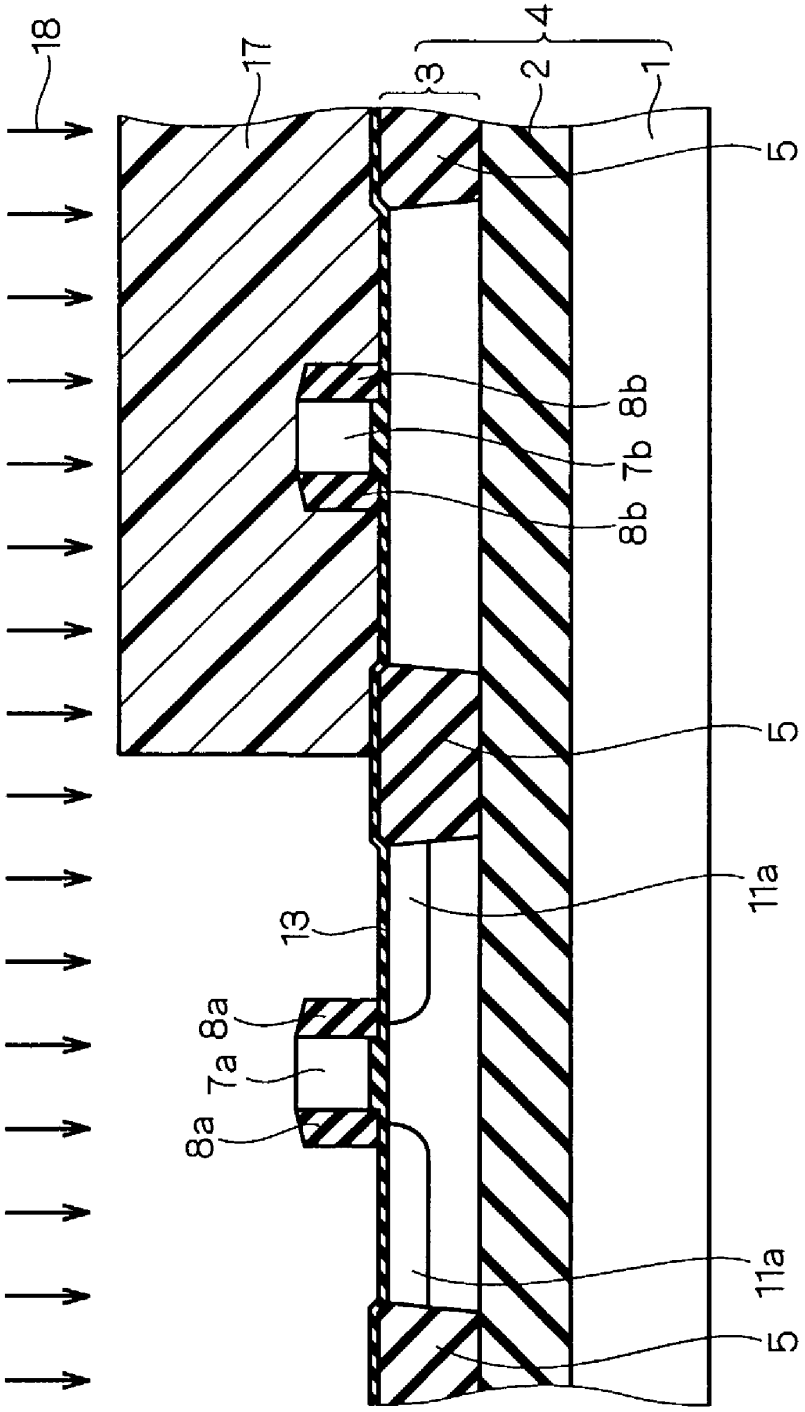

FIG. 7

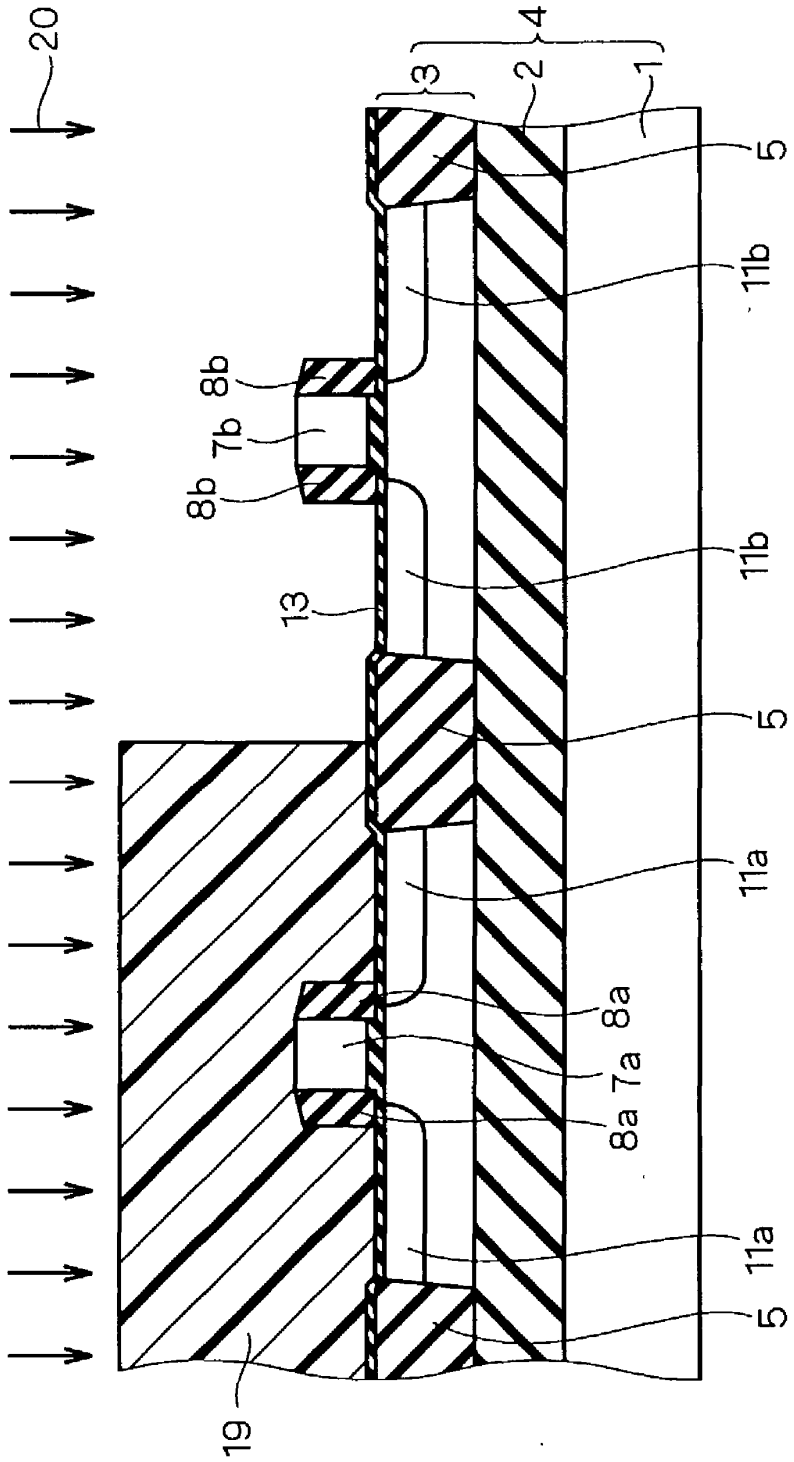

FIG. 8

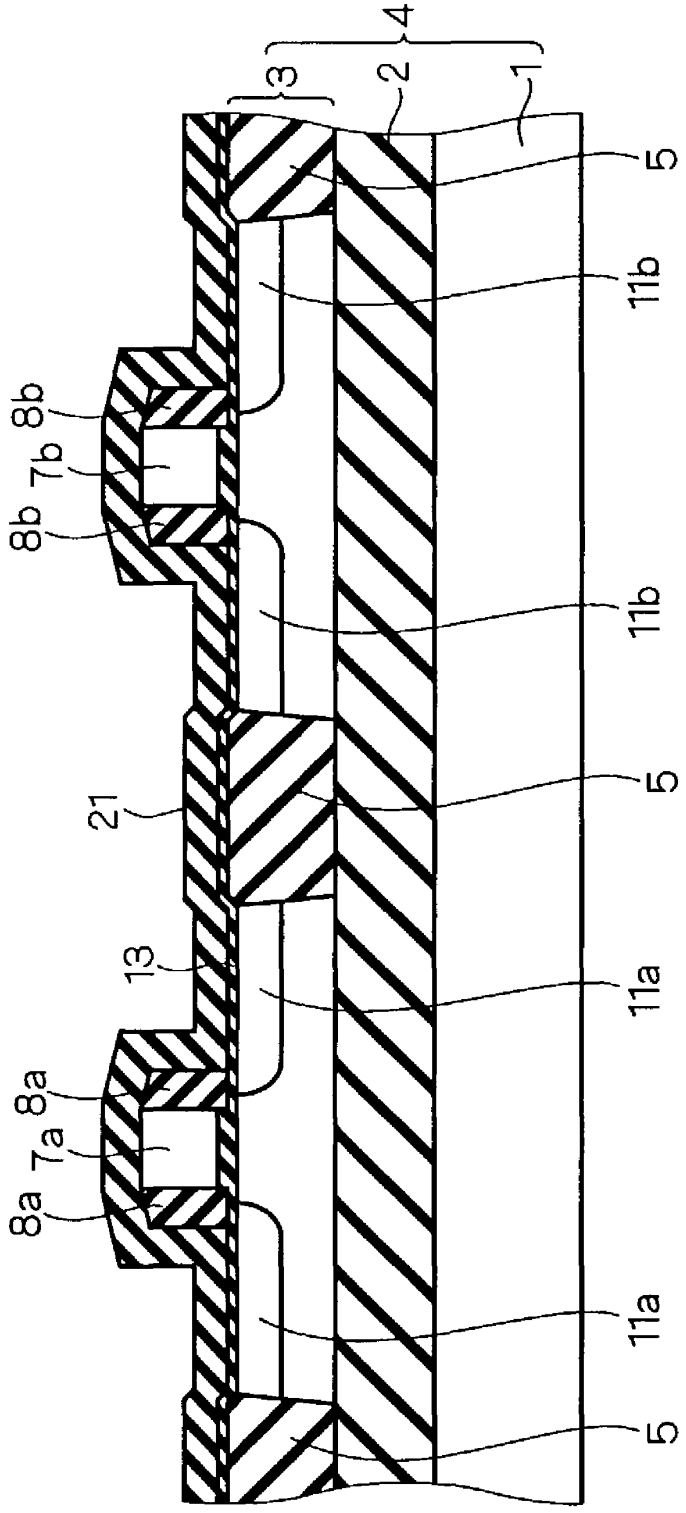

FIG. 9

FIG. 10

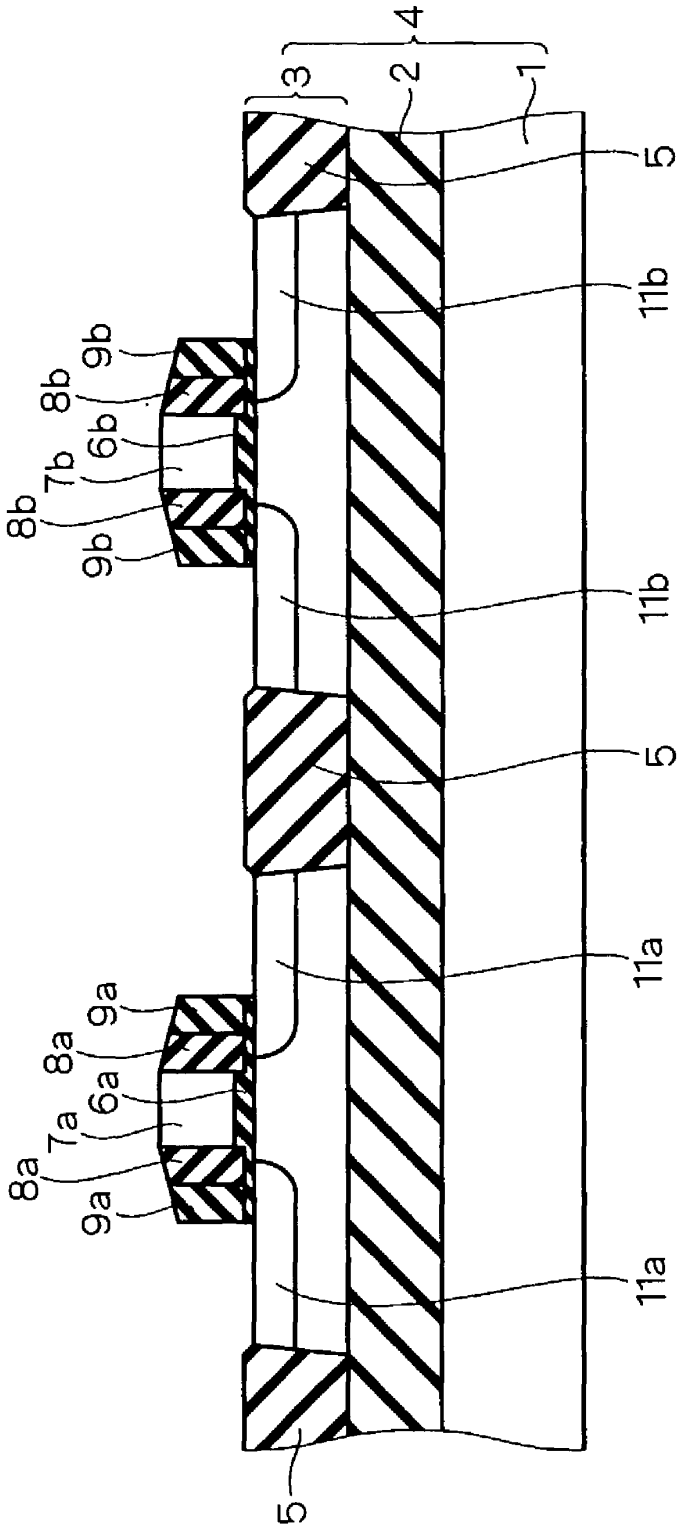

FIG. 11

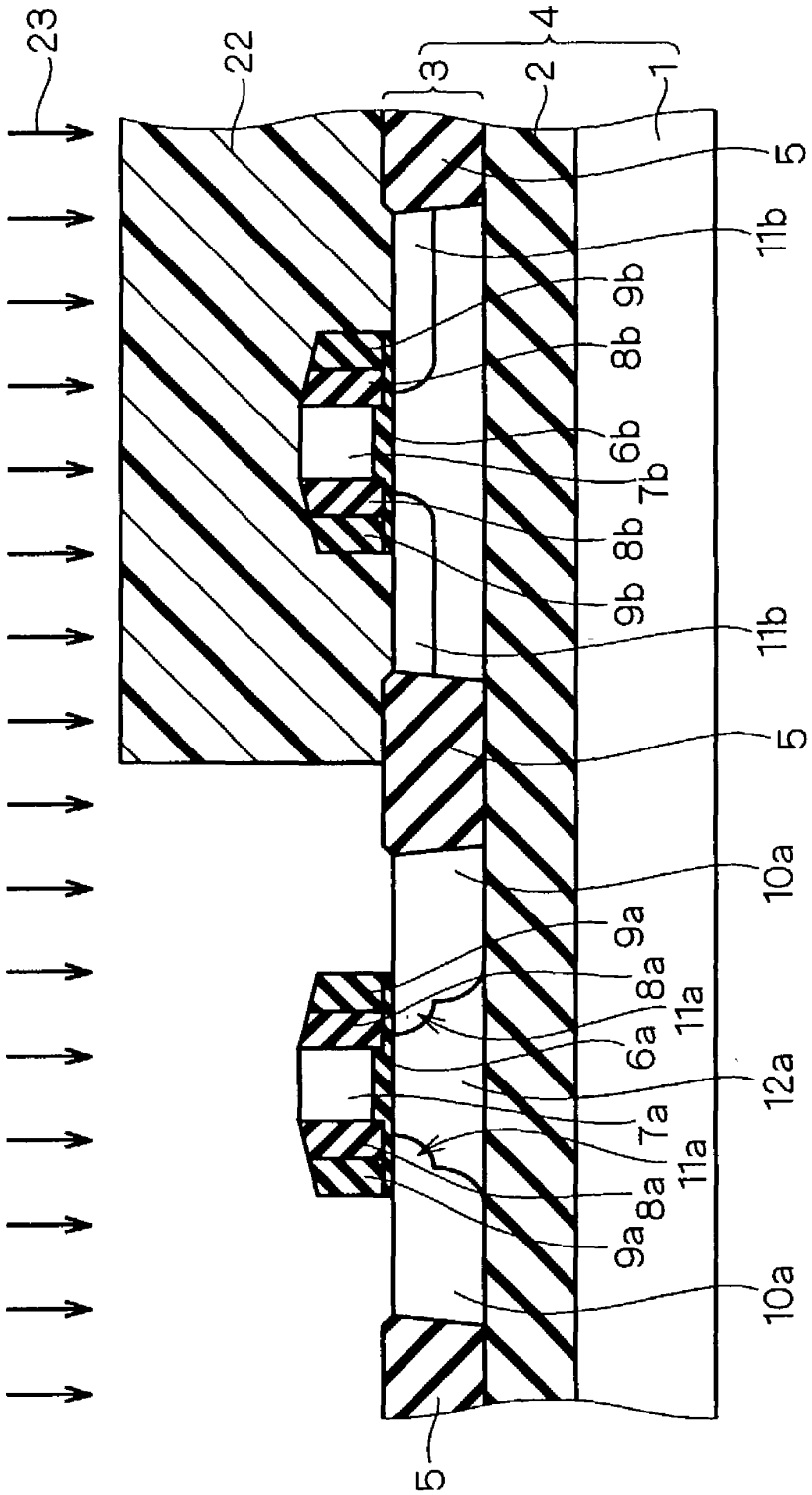
23
22
3
4
2
1
5
11b
9b
8b
6b
7b
8b
9b
11b
5
10a
9a
8a
11a
6a
12a
7a
11a
8a
9a
10a
5

FIG. 12

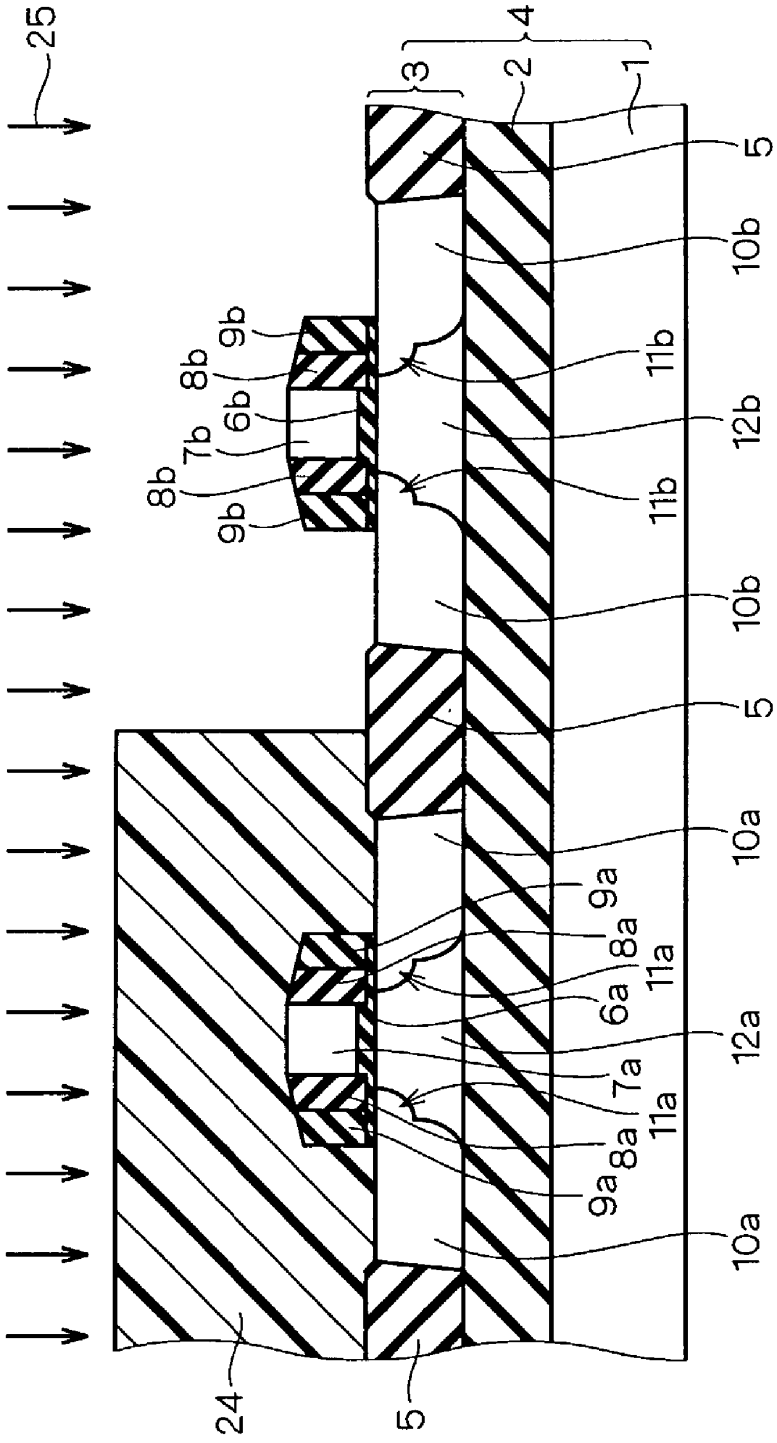
25
4
3
2
1
5
10b
9b
8b
6b
7b
8b
9b
11b
12b
11b
10b
5
10a
9a
8a
11a
6a
12a
7a
11a
8a
9a
10a
24
5

FIG. 13

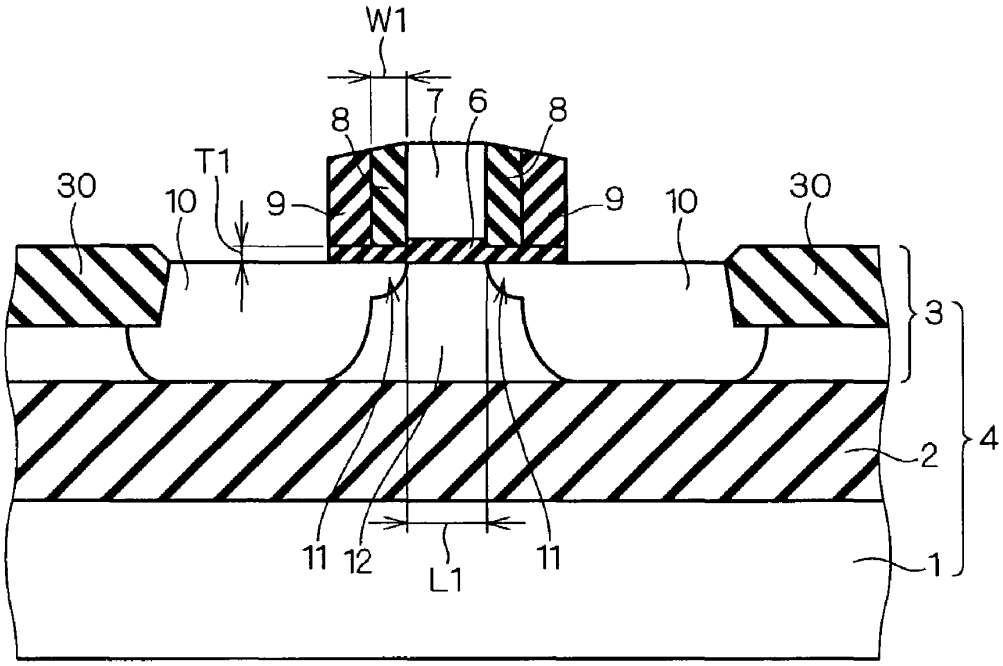

FIG. 14

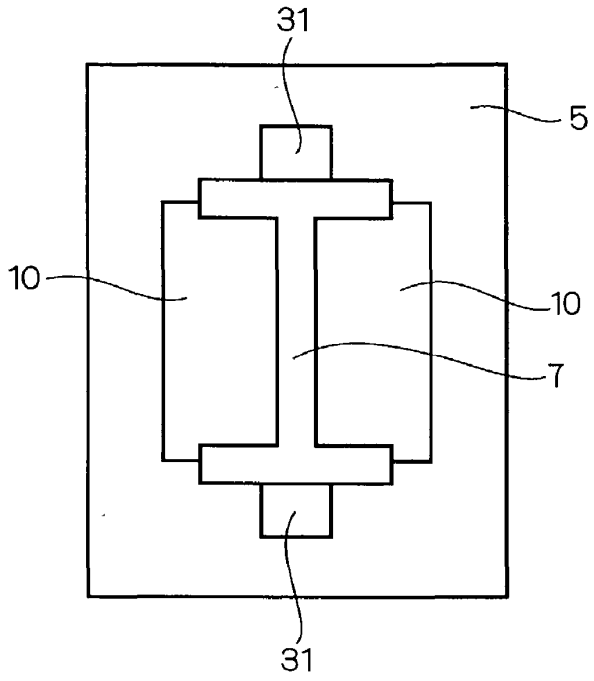

FIG. 15

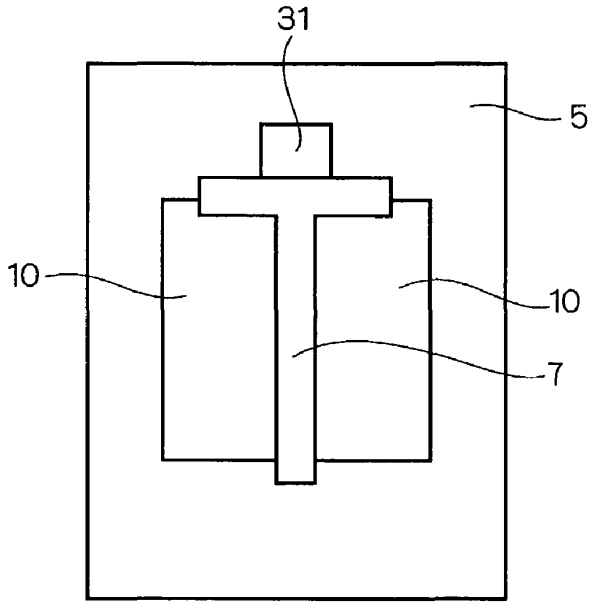

F I G . 1 6

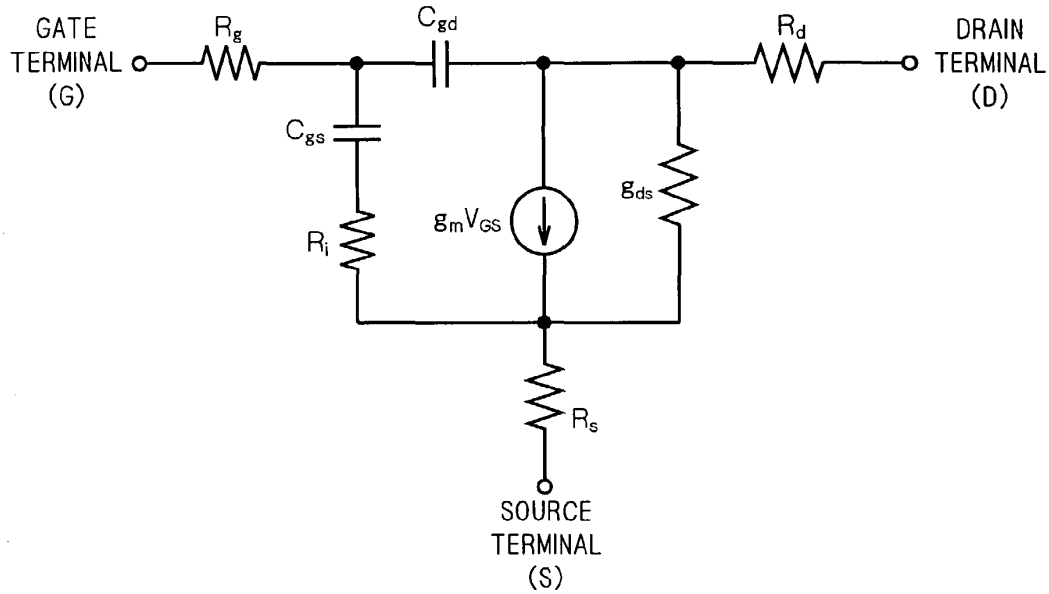
GATE
TERMINAL
(G)
R_g
C_{gd}
R_d
DRAIN
TERMINAL
(D)
C_{gs}
$g_m V_{GS}$
g_{ds}
R_i
R_s
SOURCE
TERMINAL
(S)

F I G . 1 7

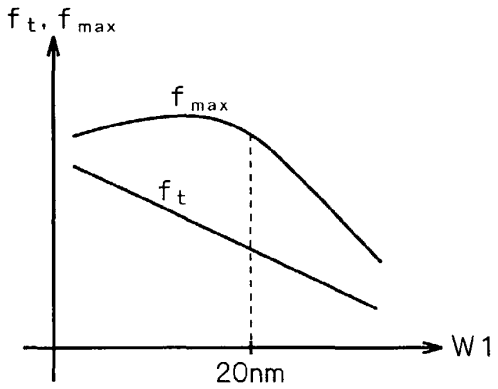
f_t, f_{max}
f_{max}
f_t
W1
20nm

FIG. 18

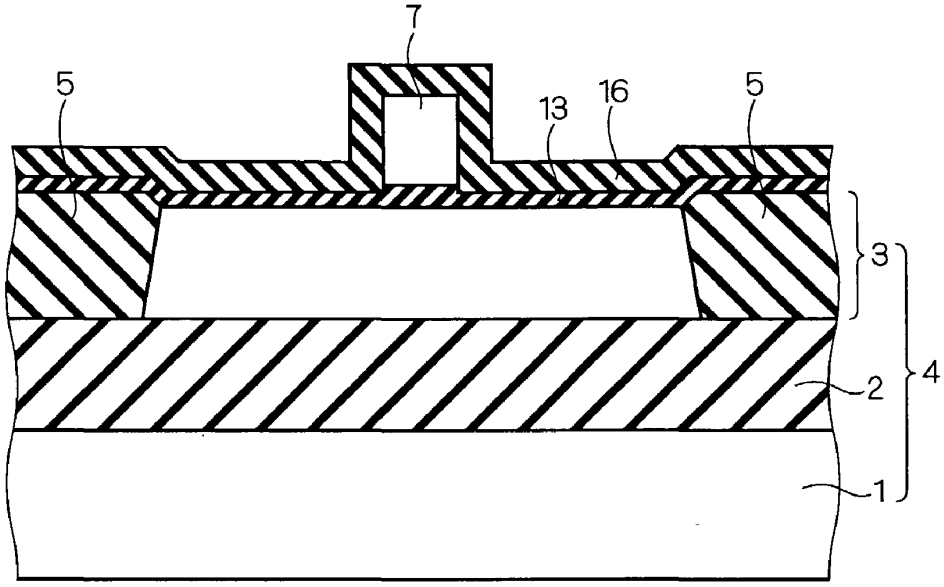

FIG. 19

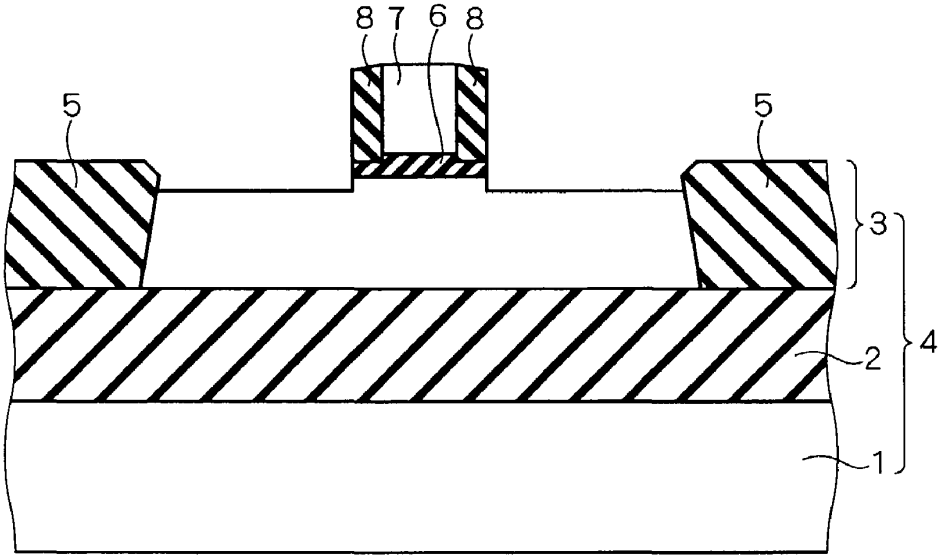

FIG. 20

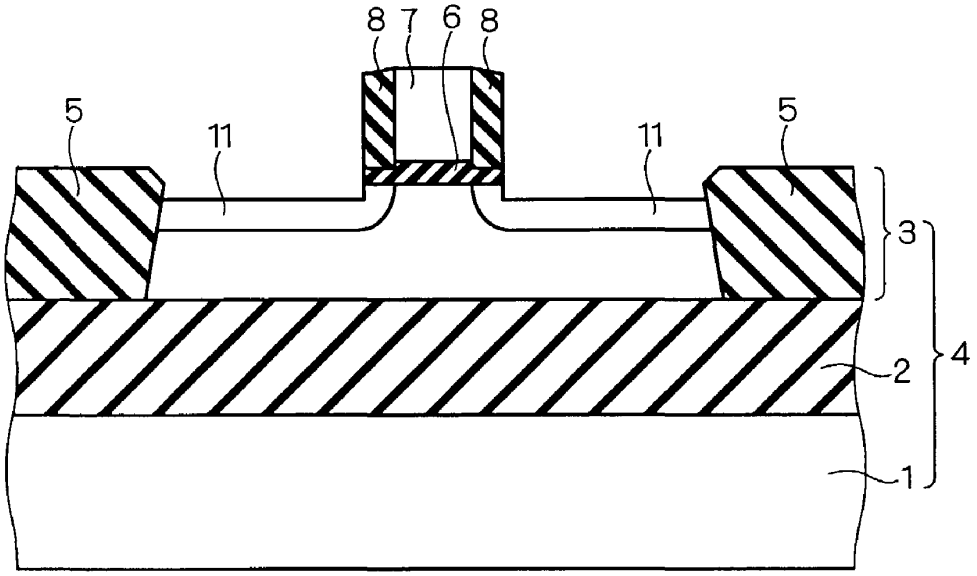

FIG. 21

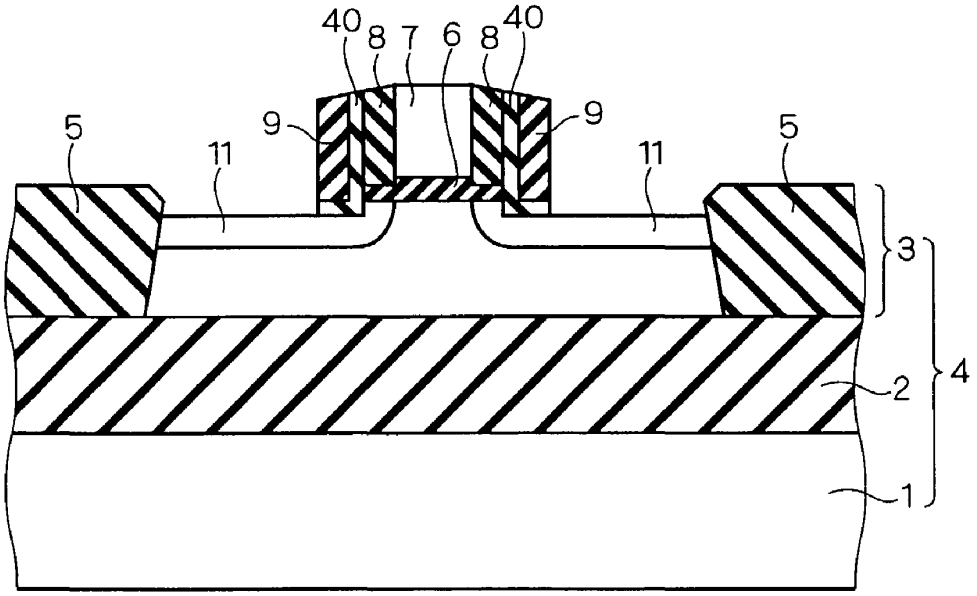

FIG. 22

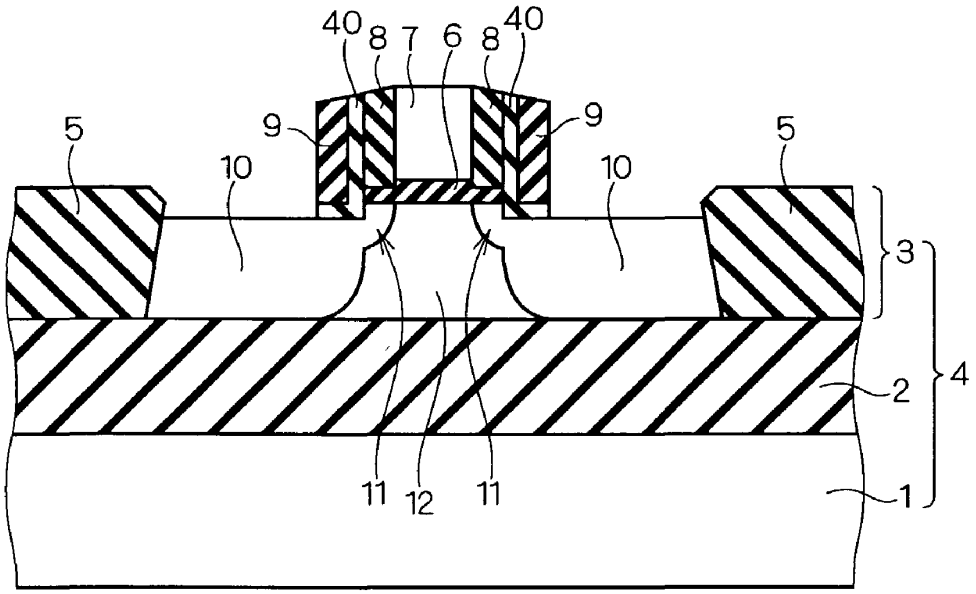

FIG. 23

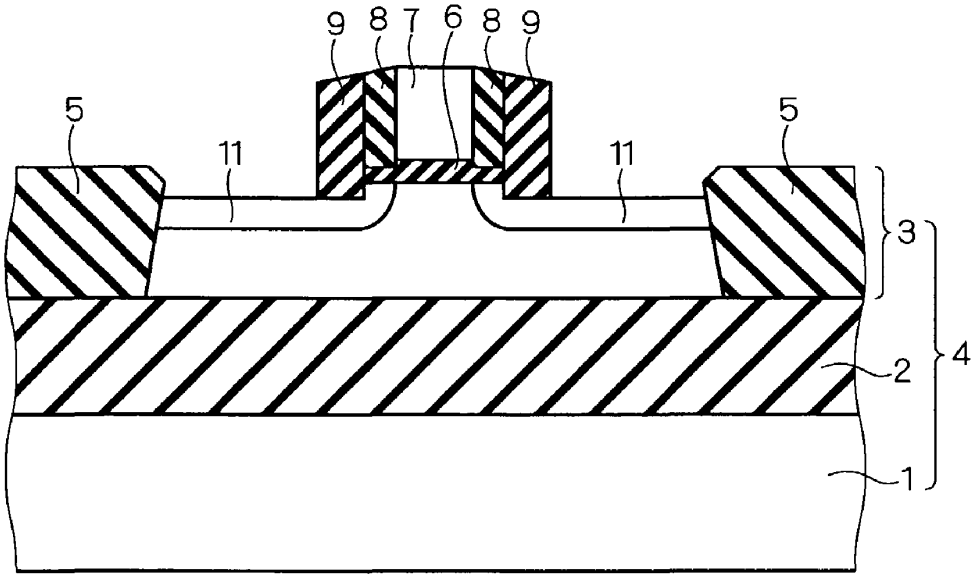

FIG. 24

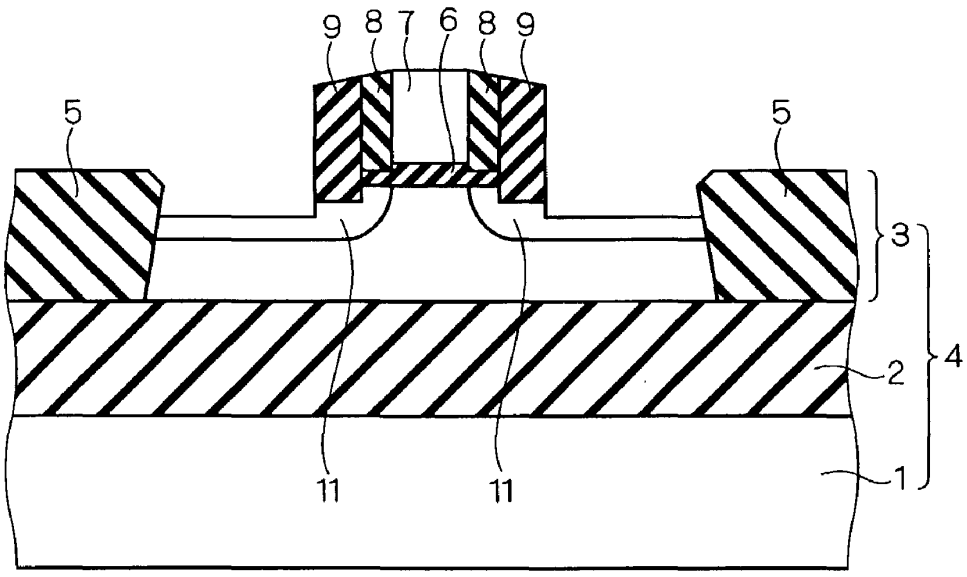

FIG. 25

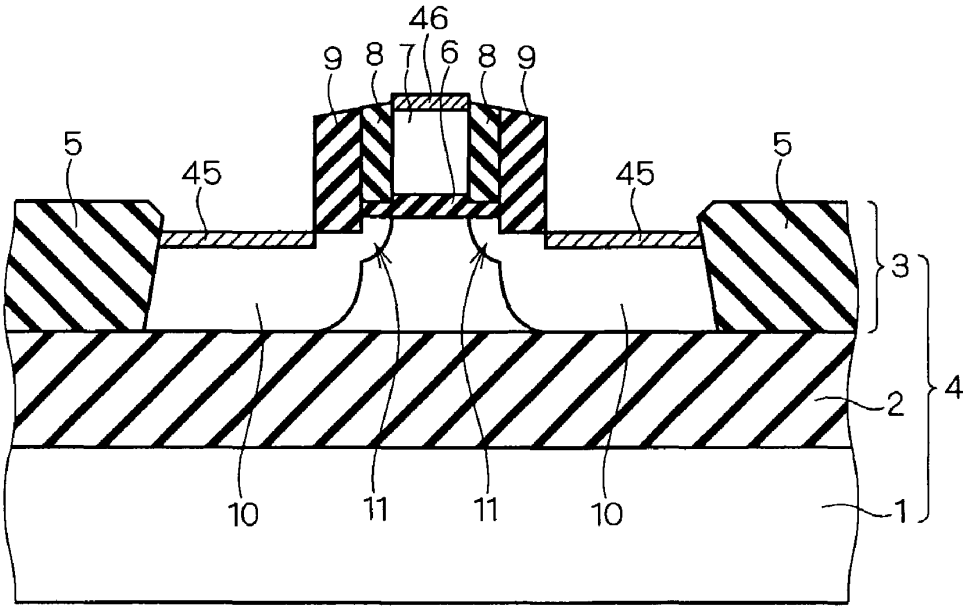

FIG. 26

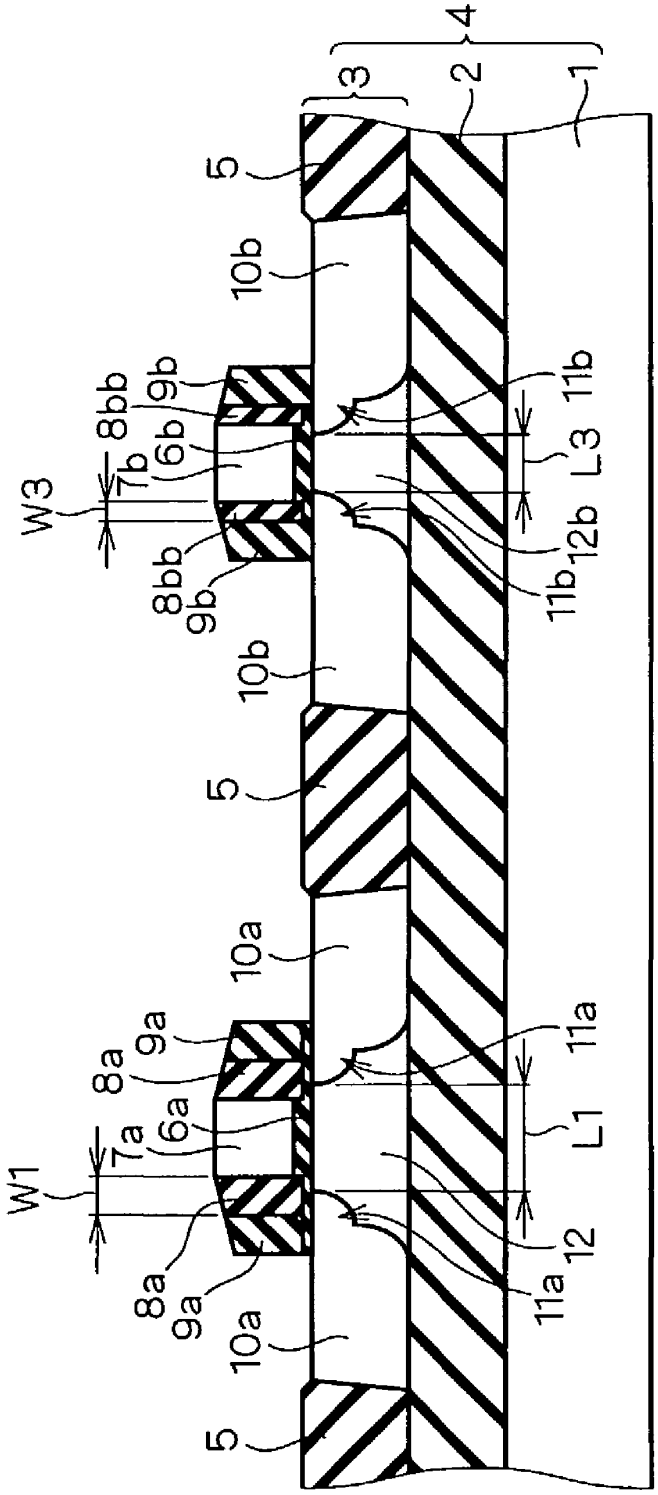
4
3
2
1
5
10b
8bb
9b
6b
7b
W3
8bb
9b
10b
11b
L3
12b
11b
5
10a
9a
8a
6a
7a
W1
8a
9a
10a
5
11a
L1
12
11a

FIG. 27

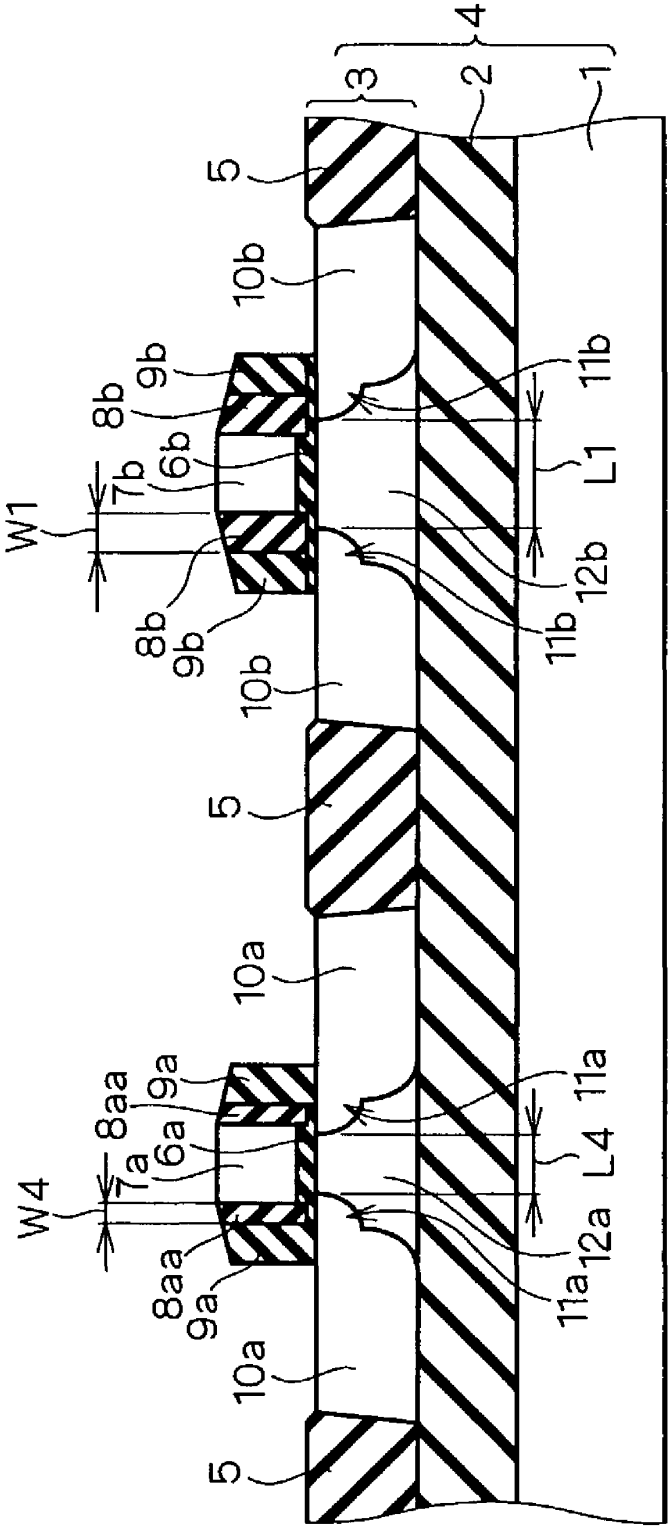
4
3
2
1
5
10b
9b
8b
6b
7b
W1
11b
L1
12b
11b
8b
9b
10b
5
10a
8aa
9a
7a
6a
W4
11a
L4
12a
11a
8aa
9a
10a
5

FIG. 28

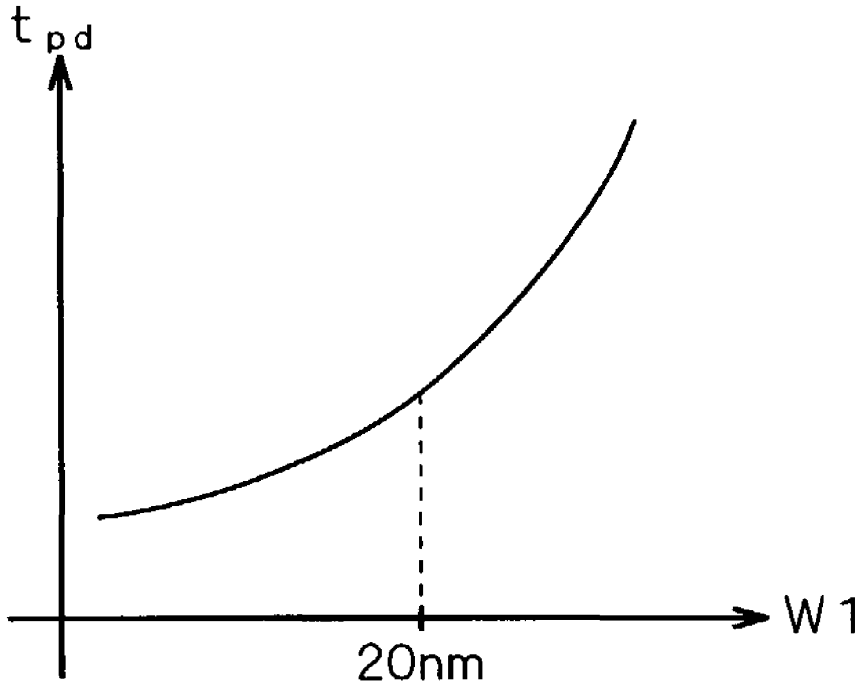

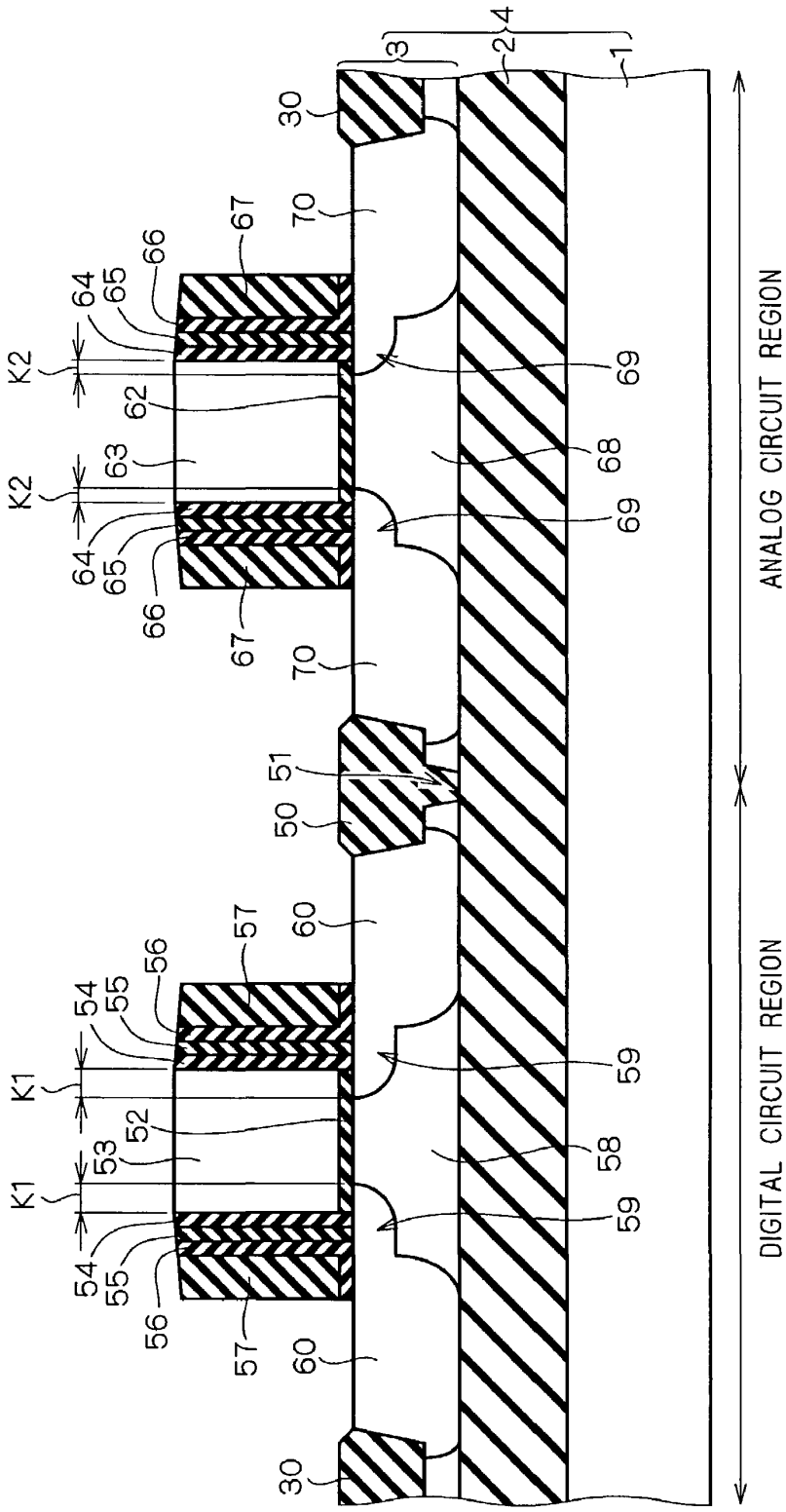
ANALOG CIRCUIT REGION
DIGITAL CIRCUIT REGION
K1
K2
1
2
3
4
30
50
51
52
53
54
55
56
57
58
59
60
62
63
64
65
66
67
68
69
70

FIG. 29

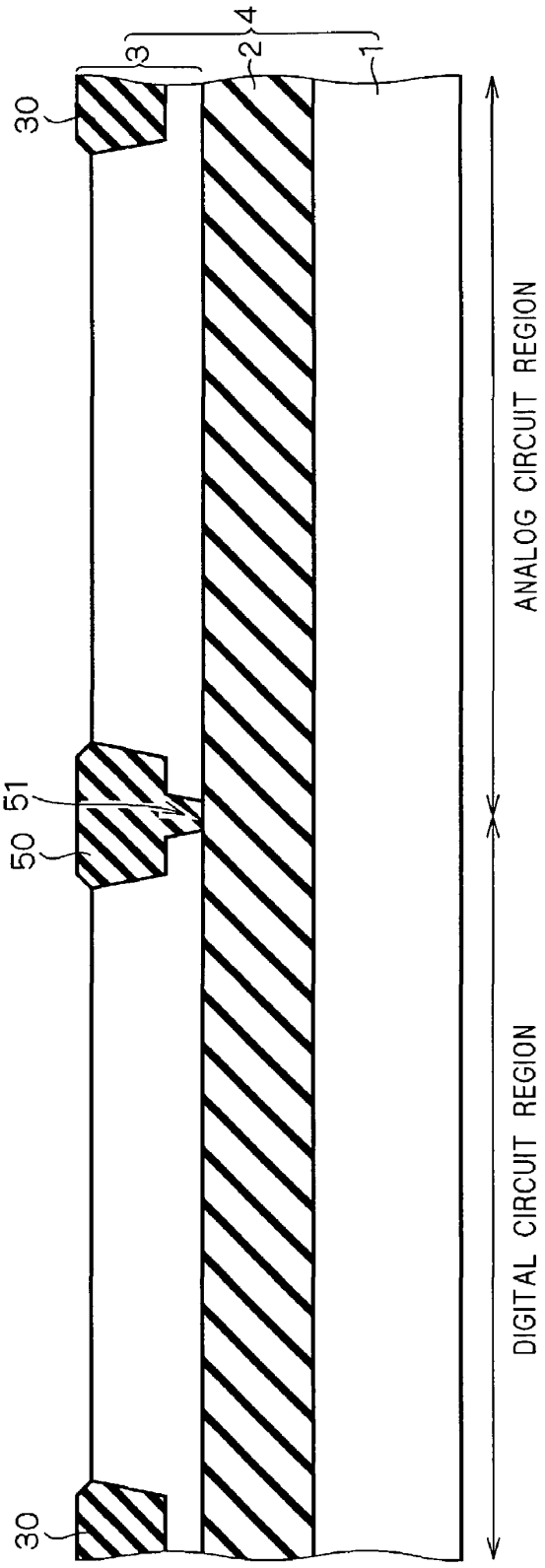
30
3
2
4
1
30
51
50
30
ANALOG CIRCUIT REGION
DIGITAL CIRCUIT REGION

FIG. 30

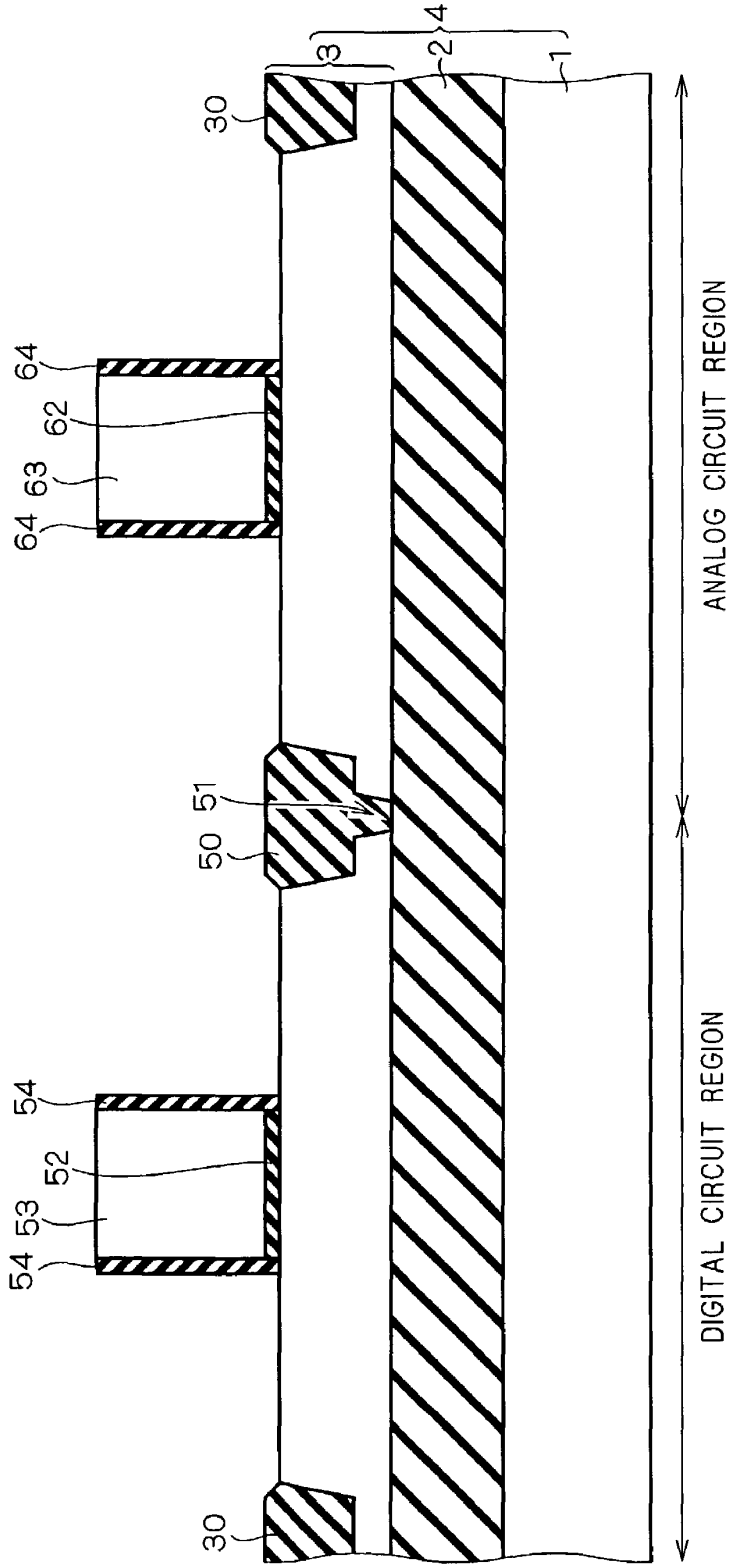
4
3
2
1
30
64
62
63
64
51
50
54
52
53
54
30
ANALOG CIRCUIT REGION
DIGITAL CIRCUIT REGION

FIG. 31

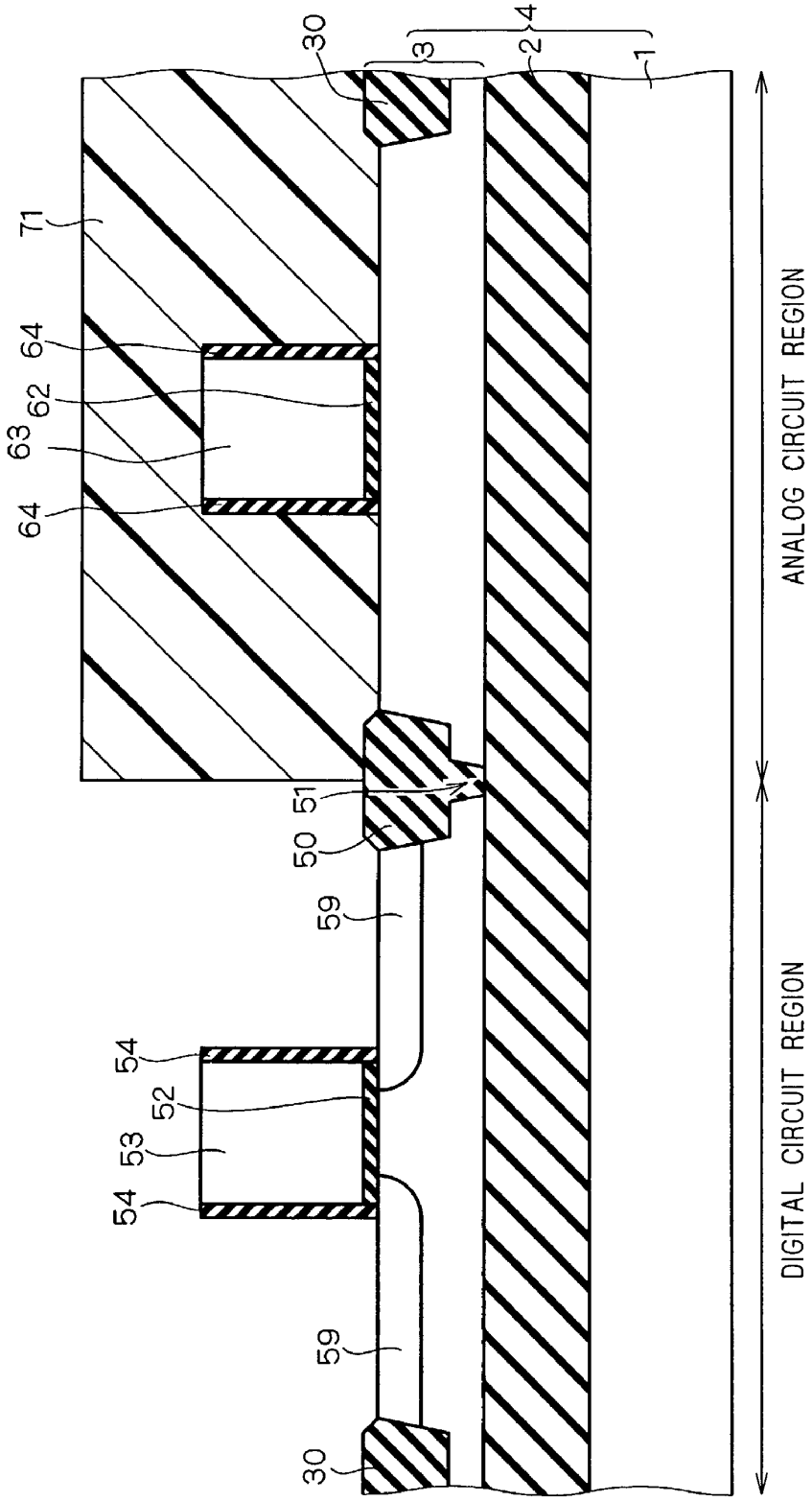
30
3
2
4
1
71
64
62
63
64
51
50
59
54
52
53
54
59
30
ANALOG CIRCUIT REGION
DIGITAL CIRCUIT REGION

FIG. 32

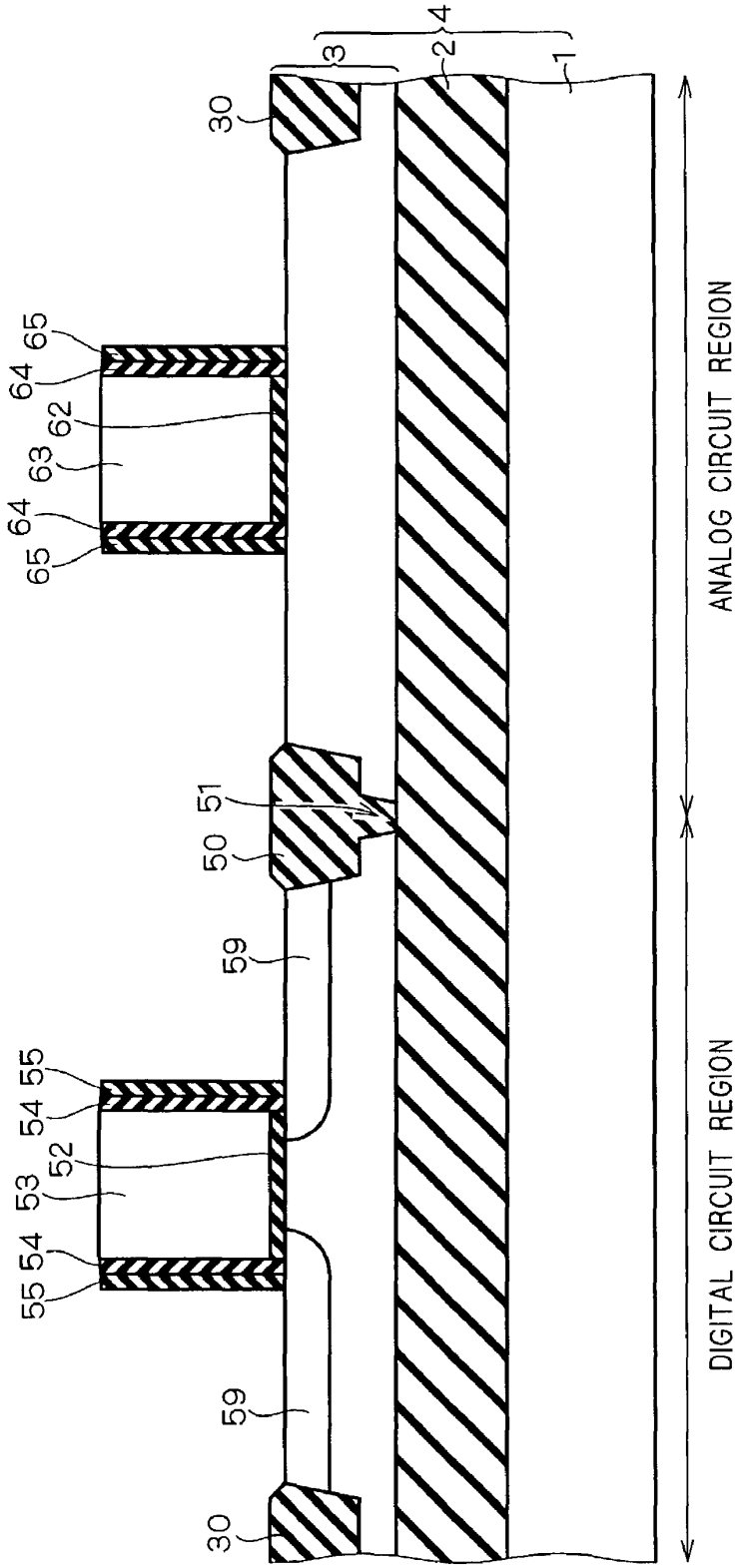
4
3
2
1
30
65
64
62
63
64
65
51
50
59
55
54
52
53
54
55
59
30
ANALOG CIRCUIT REGION
DIGITAL CIRCUIT REGION

FIG. 33

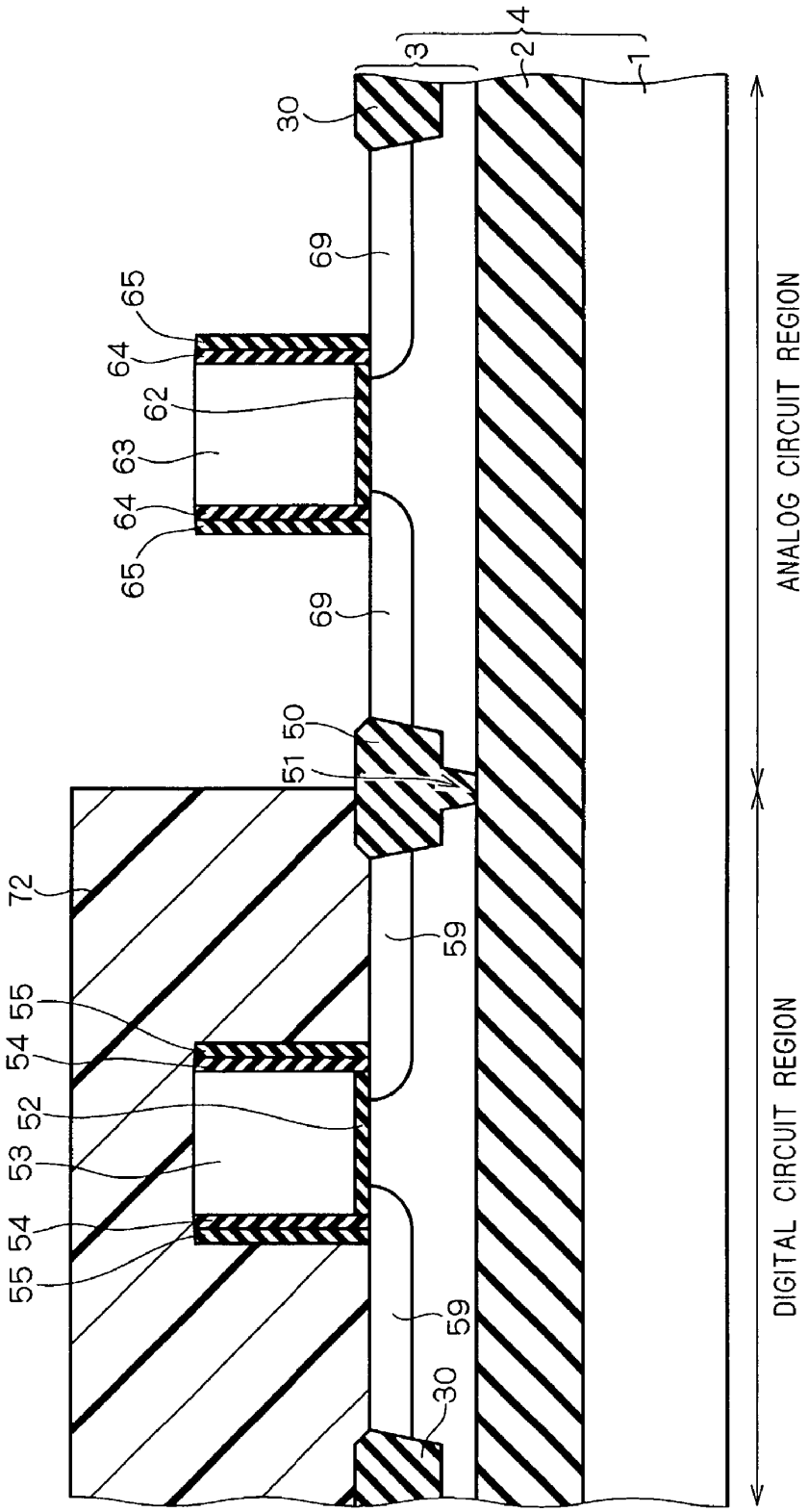
4
3
2
1
30
69
65
64
62
63
64
65
69
50
51
72
59
55
54
52
53
54
55
59
30
ANALOG CIRCUIT REGION
DIGITAL CIRCUIT REGION

FIG. 34

FIG. 35

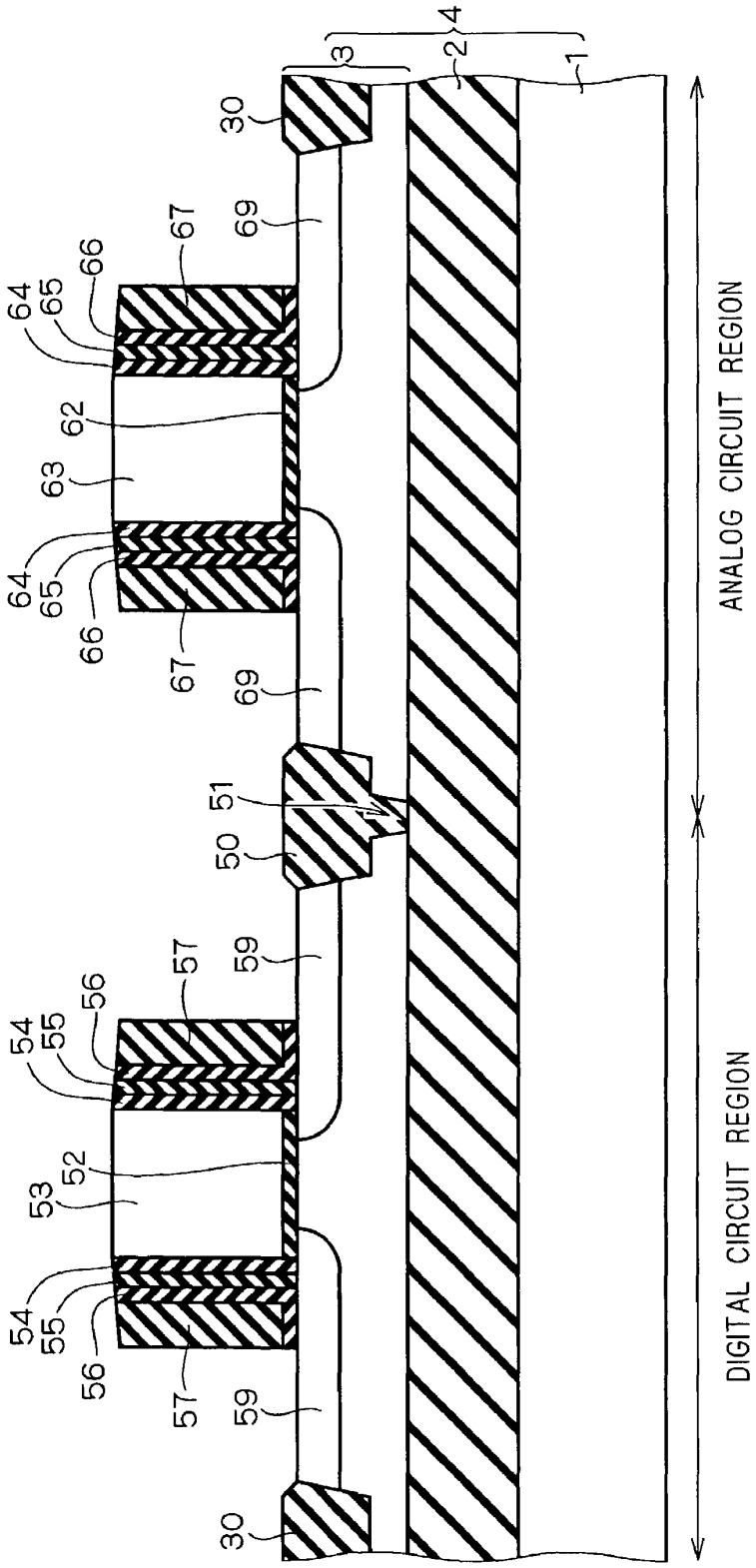
ANALOG CIRCUIT REGION
DIGITAL CIRCUIT REGION
1
2
3
4
30
30
50
51
52
53
54
55
56
57
59
62
63
64
65
66
67
69

FIG. 36

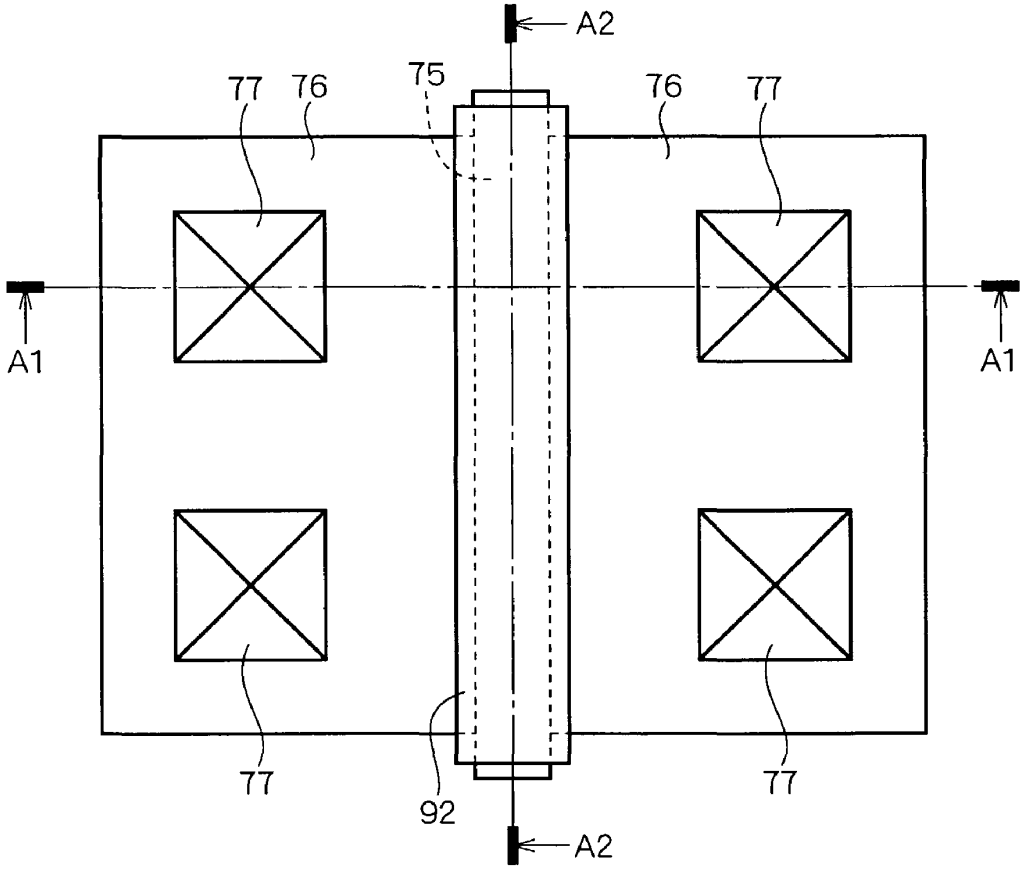

FIG. 37

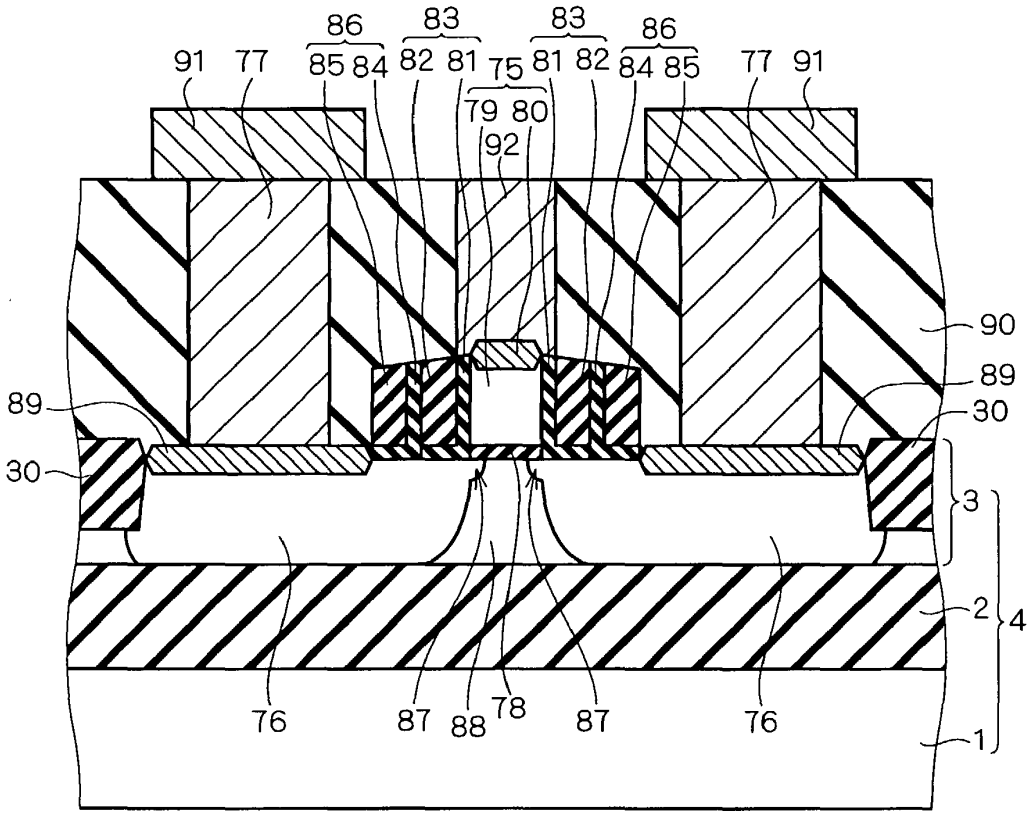
86
83
83
86
91
77
85
84
82
81
75
81
82
84
85
77
91
79
80
92
90
89
89
30
30
3
2
4
76
87
88
78
87
76
1

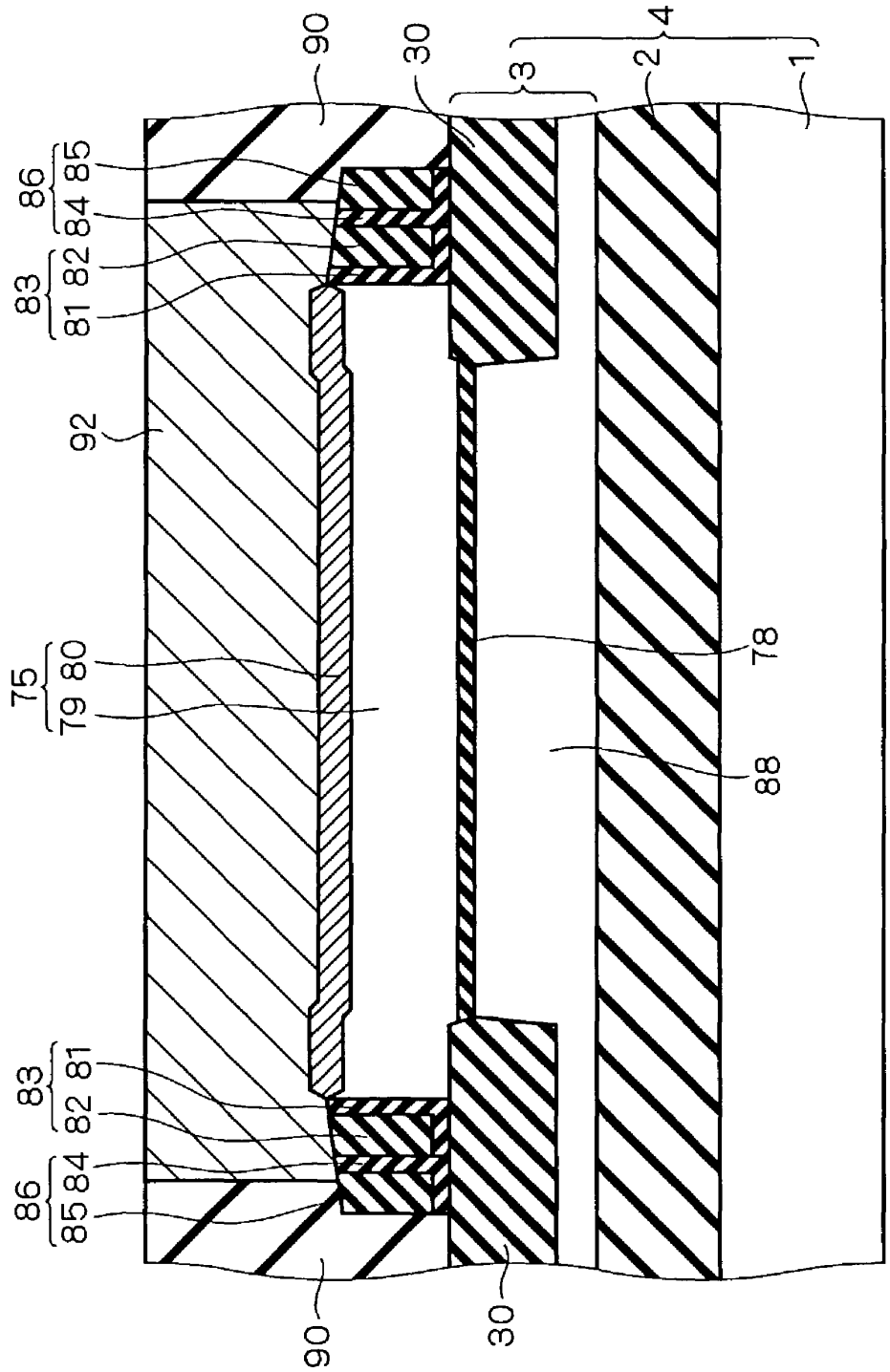

FIG. 38

FIG. 39

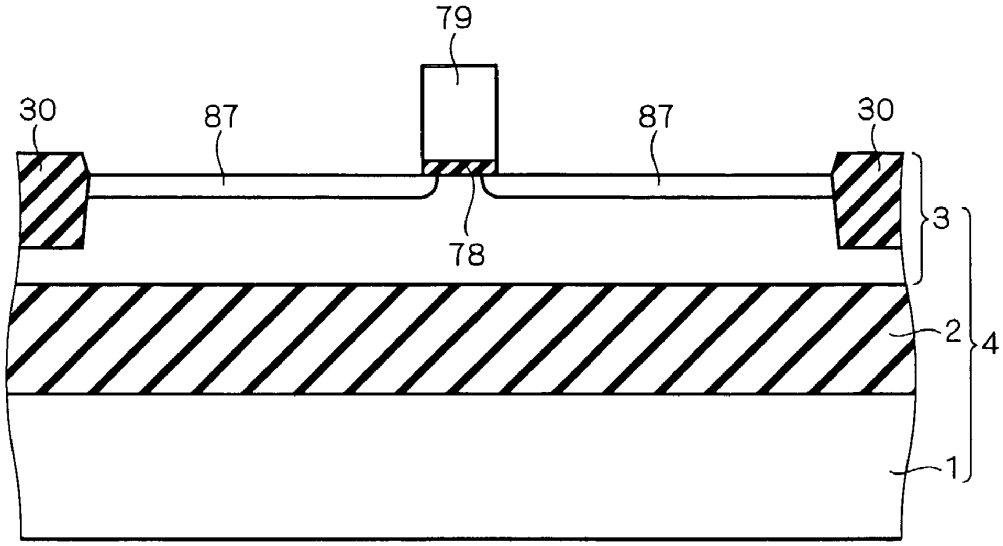
79
30
87
87
30
3
78
2
4
1

FIG. 40

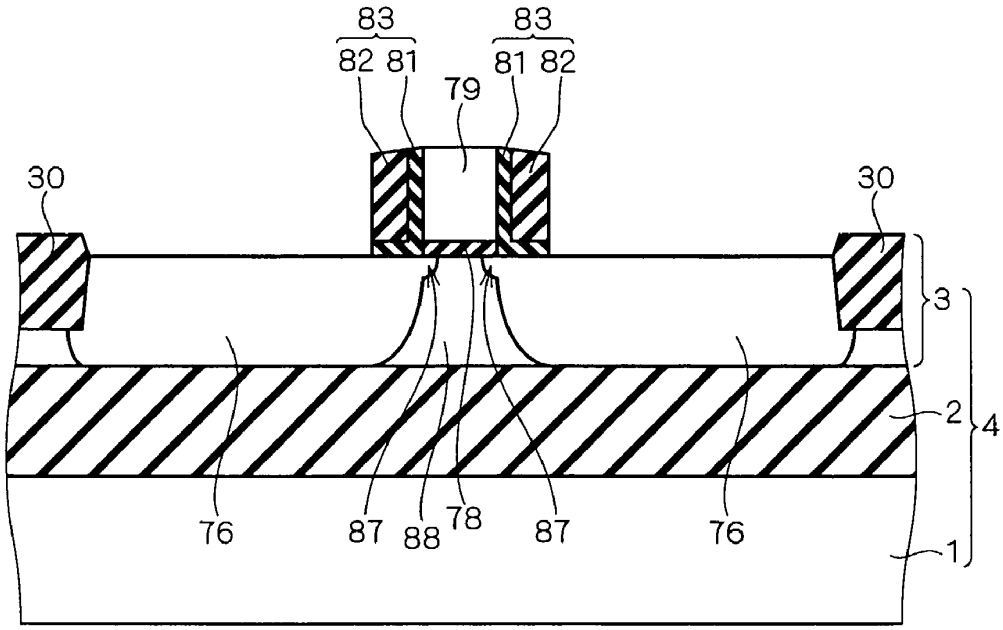
83
83
82 81
81 82
79
30
30
3
2
4
76
87
88
78
87
76
1

FIG. 41

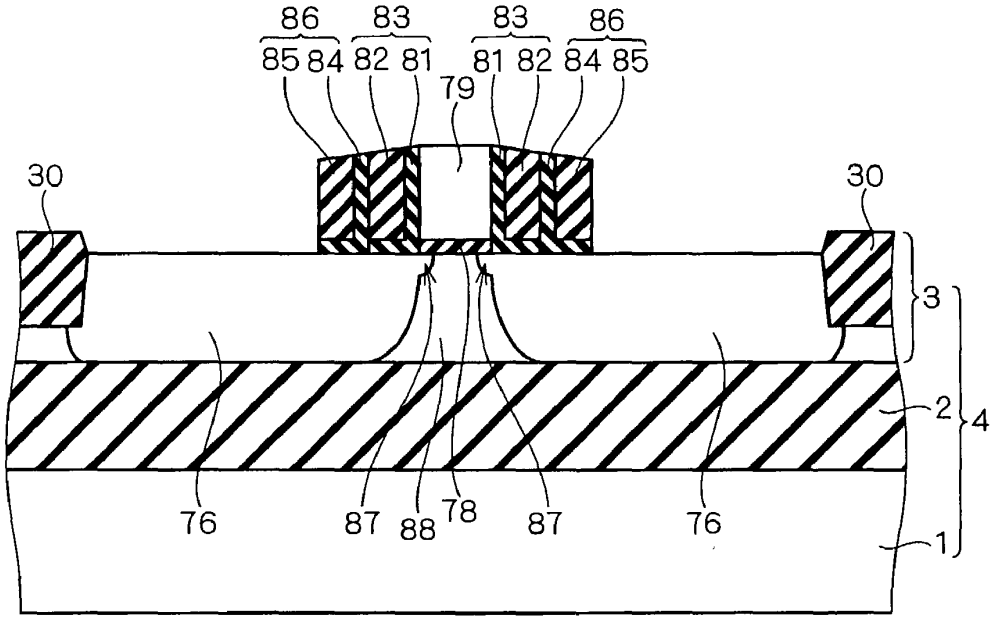
86
85 84
83
82 81
83
81 82
86
84 85
79
30
30
3
2
4
76
87
88
78
87
76
1

FIG. 42

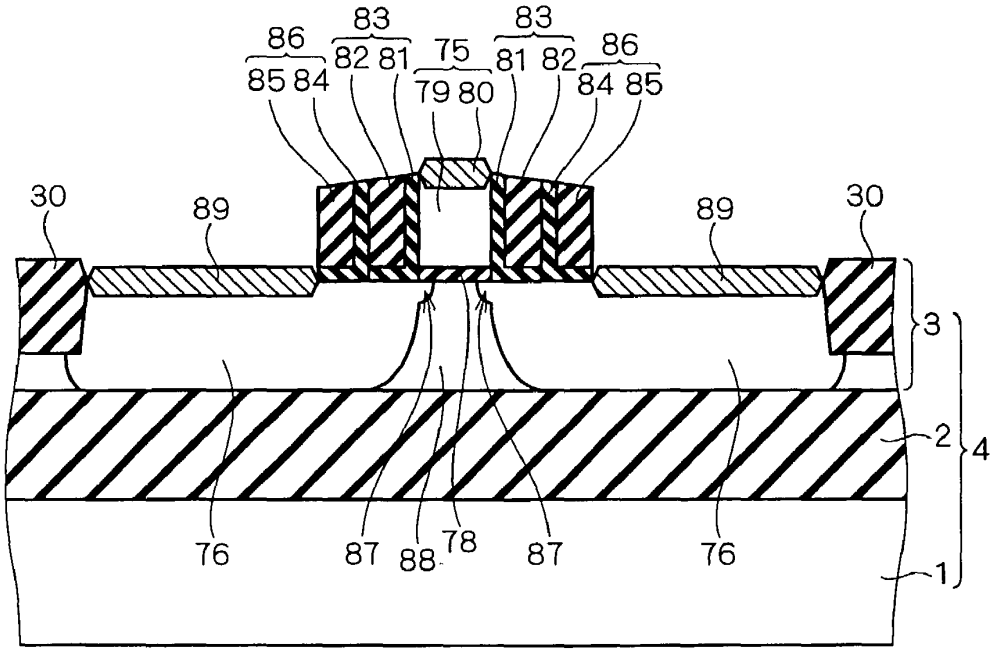
86
85 84
83
82 81
75
79 80
83
81 82
86
84 85
30
89
89
30
3
2
4
76
87
88
78
87
76
1

FIG. 43

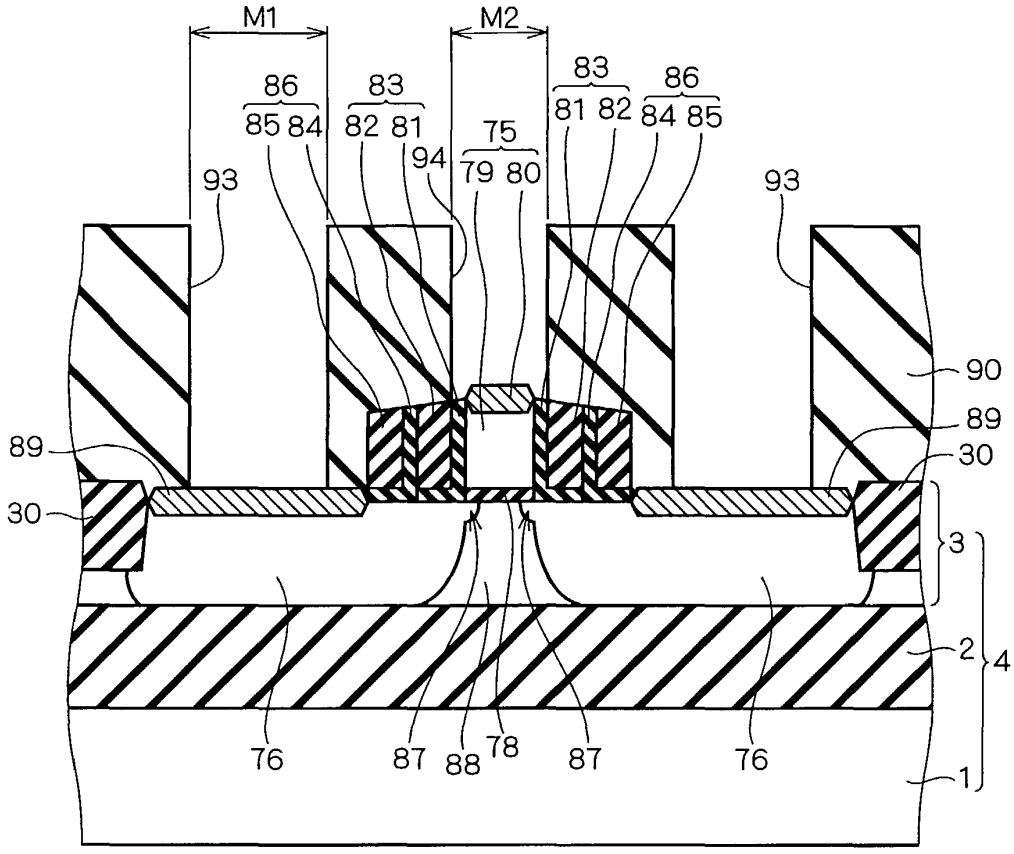
M1
M2
86
85 84
83
82 81
75
79 80
83
81 82
86
84 85
94
93
93
90
89
89
30
30
3
2
4
1
76
87
88
78
87
76

FIG. 44

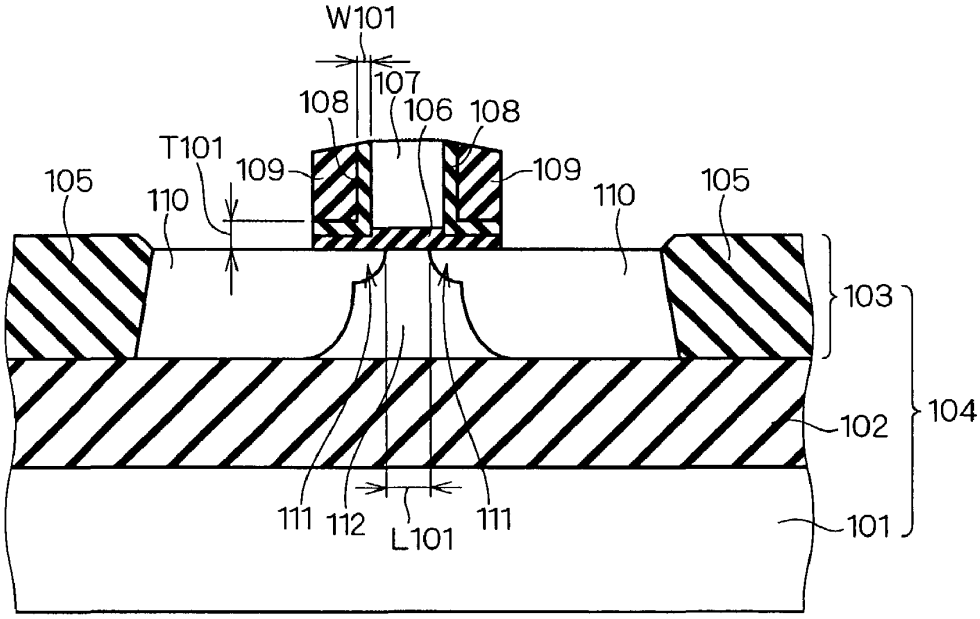
W101
107
108
106
108
T101
109
109
105
110
110
105
103
104
102
111
112
L101
111
101

FIG. 45

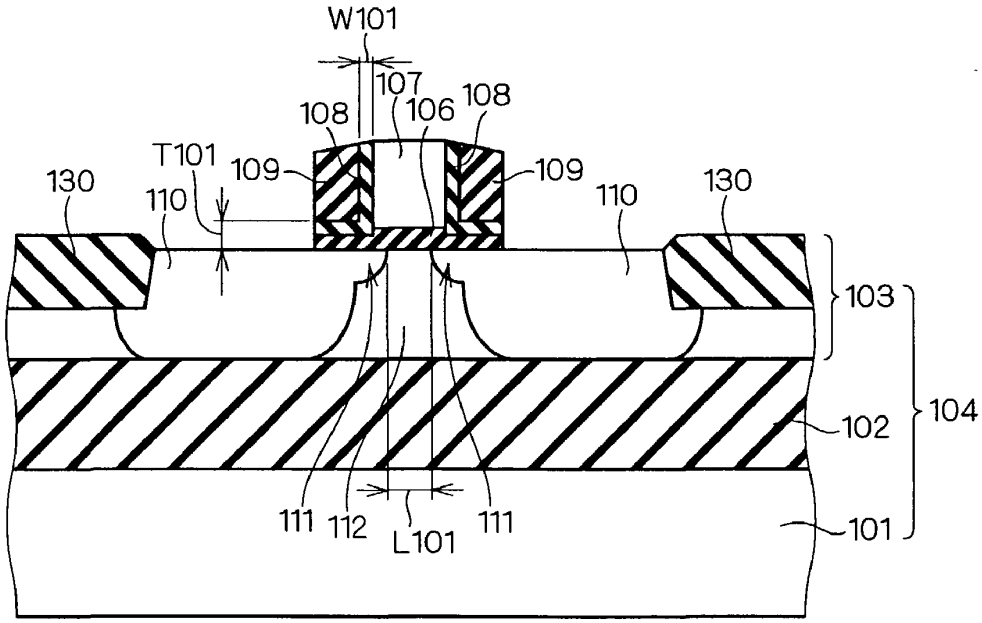
W101
107
108
106
108
T101
109
109
130
110
110
130
103
104
102
111
112
L101
111
101

FIG. 46

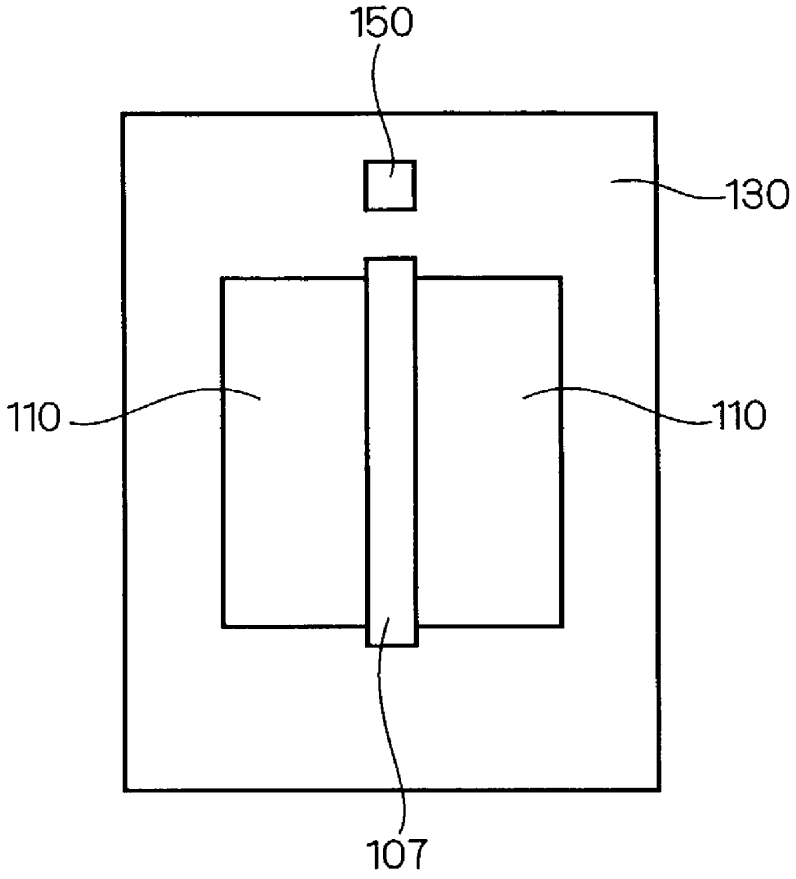

SEMICONDUCTOR DEVICE AND METHOD OF MANUFACTURING SAME

BACKGROUND OF THE INVENTION

[0001] 1. Field of the Invention

[0002] The present invention relates to a semiconductor device and a method of manufacturing the same. More particularly, the invention relates to a MOSFET (Metal Oxide Semiconductor Field Effect Transistor) employing an SOI (Silicon-On-Insulator) substrate and a method of manufacturing the same.

[0003] 2. Description of the Background Art

[0004] Attention has been given to a semiconductor device (SOI device) employing an SOI substrate as a high-operating-speed, low-power-consumption device. The SOI substrate has a multi-layer structure including a semiconductor substrate, an insulation layer and a semiconductor layer which are stacked in the order named. An SOI device (thin-film SOI device) having a semiconductor layer thinned to about several micrometers has recently received particular attention, and has been expected to be applied to LSI circuits for portable equipment.

[0005] **FIG. 44** is a sectional view showing a structure of a background art semiconductor device. An SOI substrate **104** has a multi-layer structure such that a silicon substrate **101**, a BOX (Buried OXide) layer **102** and a silicon layer **103** are stacked in the order named. An isolating insulation film **105** made of silicon oxide is partially formed in the silicon layer **103**. The isolating insulation film **105** extends from the upper surface of the silicon layer **103** to the upper surface of the BOX layer **102**. The isolating insulation film having such a configuration is referred to as a "completely isolating insulation film."

[0006] A MOSFET is formed in a device region defined by the isolating insulation film **105** in a manner to be specifically described below. A silicon oxide film **106** is formed partially on the upper surface of the silicon layer **103**. A gate electrode **107** made of polysilicon is formed partially on the silicon oxide film **106**. A portion of the silicon oxide film **106** which lies under the gate electrode **107** functions as a gate insulation film. A silicon nitride film **109** is formed on each side surface of the gate electrode **107**, with a silicon oxide film **108** therebetween. The silicon oxide films **108** are formed not only between the side surfaces of the gate electrode **107** and side surfaces of the silicon nitride films **109** but also between the upper surface of the silicon oxide film **106** and the lower surface of the silicon nitride films **109**.

[0007] A pair of source/drain regions **110** are formed in the silicon layer **103**. A region between the pair of source/drain regions **110** is defined as a body region **112**. Each of the source/drain regions **110** has an extension **111** extending to under the gate electrode **107** in the upper surface of the silicon layer **103**.

[0008] **FIG. 45** is a sectional view showing a structure of another background art semiconductor device. The semiconductor device shown in **FIG. 45** has an isolating insulation film **130** made of silicon oxide in place of the completely isolating insulation film **105** shown in **FIG. 44**. The lower surface of the isolating insulation film **130** does not reach the upper surface of the BOX layer **102**. The isolating insulation film having such a configuration is referred to as a "partially isolating insulation film." The remaining structure of the semiconductor device shown in **FIG. 45** is similar to the corresponding structure of the semiconductor device shown in **FIG. 44**.

[0009] **FIG. 46** is a schematic top plan view showing a top surface structure of the semiconductor device shown in **FIG. 45**. The use of the partially isolating insulation film **130** allows the body region **112** to be tied to a fixed potential through a portion of the silicon layer **103** which lies between the lower surface of the isolating insulation film **130** and the upper surface of the BOX layer **102** from a body contact region **150**. This suppresses a so-called floating body effect such as the occurrence of a kink effect and variations in delay time depending on an operating frequency.

[0010] Referring again to **FIGS. 44 and 45**, the width W**101** of the silicon oxide film **108** in a direction of the gate length (or in the lateral direction as viewed in the drawings) is less than the total thickness T**101** of the silicon oxide film **106** and the silicon oxide film **108**. In some cases, however, a portion of the silicon oxide film **106** other than functioning as the gate insulation film (i.e., a portion of the silicon oxide film **106** which lies between the lower surface of the silicon oxide film **108** and the upper surface of the silicon layer **103** as viewed in **FIG. 44**) is removed away during a gate etching process, in which case the width W**101** is equal to the total thickness T**101**. Thus, the width W**101** is not greater than the total thickness T**101** in the background art semiconductor devices.

[0011] Unfortunately, in such background art semiconductor devices, the relatively small width W**101** of the silicon oxide film **108** results in a relatively short distance L**101** between the pair of source/drain regions **110** (more specifically, between the pair of extensions **111**).

[0012] In the semiconductor devices shown in **FIGS. 44 and 45**, there is a parasitic bipolar transistor with the source/drain regions **110** serving as an emitter and a collector and the body region **112** serving as a base. The short distance L**101** between the pair of source/drain regions **110** means a small base width of the parasitic bipolar transistor, resulting in high gain of the parasitic bipolar transistor. As a result, the background art semiconductor devices present a problem such that there is a danger that the high gain of the parasitic bipolar transistor causes a malfunction and a variation in operating characteristics of the MOSFET.

SUMMARY OF THE INVENTION

[0013] It is an object of the present invention to provide a semiconductor device which achieves reductions in malfunctions and operating characteristic variations by reducing the gain of a parasitic bipolar transistor, and a method of manufacturing the same.

[0014] According to a first aspect of the present invention, the semiconductor device includes an SOI substrate, a first insulation film, a gate electrode, a pair of second insulation films, a pair of third insulation films, a body region, and a pair of source/drain regions. The SOI substrate has a multi-layer structure including a semiconductor substrate, an insulation layer and a semiconductor layer stacked in the order named. The first insulation film is formed on a main surface

of the semiconductor layer. The gate electrode is formed on the first insulation film. The pair of second insulation films have respective inner side surfaces in contact with side surfaces of the gate electrode and respective outer side surfaces out of contact with the side surfaces of the gate electrode, with the gate electrode disposed between the pair of second insulation films. The pair of third insulation films are formed on the main surface of the semiconductor layer, with the first insulation film therebetween. The pair of third insulation films have respective inner side surfaces in contact with the outer side surfaces of the second insulation films and respective outer side surfaces out of contact with the outer side surfaces of the second insulation films, with the gate electrode and the second insulation films disposed between the pair of third insulation films. The body region is formed in the semiconductor layer under the gate electrode. The pair of source/drain regions are formed in the semiconductor layer, with the body region disposed between the pair of source/drain regions. The source/drain regions have respective extensions extending from under the outer side surfaces of the second insulation films toward the body region in the main surface of the semiconductor layer. The width of the second insulation films in a direction of gate length is greater than the thickness of a portion of the first insulation film underlying the third insulation films.

[**0015**] In the semiconductor device according to the present invention, the relatively large width of the second insulation films leads to a relatively long distance between the pair of extensions formed by ion implantation using the second insulation films as an implant mask. Accordingly increased base width of a parasitic bipolar transistor reduces the gain of the parasitic bipolar transistor, thereby to suppress malfunctions and operating characteristic variations of the MOSFET. Additionally, a decreased amount of overlap between the gate electrode and the extensions as viewed in plan suppresses a gate overlap capacitance to achieve the increase in operating speed and the reduction in power consumption.

[**0016**] Preferably, in the semiconductor device, the width of the second insulation films is in the range of 2/7 to 1 times the gate length.

[**0017**] The semiconductor device achieves the stable formation of the gate electrode and suppresses the reduction in maximum oscillation frequency.

[**0018**] Preferably, in the semiconductor device, a lifetime killer is formed in the main surface of the semiconductor layer.

[**0019**] The semiconductor device, in which the lifetime killer for the parasitic bipolar transistor is formed in the main surface of the semiconductor layer, reduces the gain of the parasitic bipolar transistor.

[**0020**] Preferably, in the semiconductor device, a portion of the main surface of the semiconductor layer on which the third insulation films are formed is sunk toward the insulation layer below a portion of the main surface of the semiconductor layer on which the second insulation films are formed.

[**0021**] In the semiconductor device, etching the upper surface of the semiconductor layer as well in the etching step for the formation of the second insulation films creates the lifetime killer in the main surface of the semiconductor layer.

[**0022**] Preferably, in the semiconductor device, a portion of the main surface of the semiconductor layer positioned outside the outer side surfaces of the third insulation films is sunk toward the insulation layer below a portion of the main surface of the semiconductor layer on which the third insulation films are formed.

[**0023**] In the semiconductor device, etching the upper surface of the semiconductor layer as well in the etching step for the formation of the third insulation films creates the lifetime killer in the main surface of the semiconductor layer.

[**0024**] Preferably, the semiconductor device further includes a metal-semiconductor compound layer formed on the source/drain regions.

[**0025**] In the semiconductor device, forming the metal-semiconductor compound layer on the source/drain regions creates the lifetime killer in the main surface of the semiconductor layer.

[**0026**] Preferably, in the semiconductor device, the third insulation films are made of silicon nitride. The third insulation films are formed directly on the main surface of the semiconductor layer without the first insulation film therebetween.

[**0027**] In the semiconductor device, stresses caused at an interface between the silicon nitride film and the semiconductor layer create the lifetime killer in the main surface of the semiconductor layer.

[**0028**] Preferably, the semiconductor device is a MOSFET. The MOSFET includes an NMOSFET and a PMOSFET both formed in the semiconductor layer. The width of the second insulation films included in the NMOSFET is greater than the width of the second insulation films included in the PMOSFET.

[**0029**] The semiconductor device suppresses a floating body effect problem in the NMOSFET to achieve the increase in operating speed and an improvement in current driving capability.

[**0030**] Preferably, the semiconductor device is a MOSFET. The MOSFET includes an NMOSFET and a PMOSFET both formed in the semiconductor layer. The width of the second insulation films included in the PMOSFET is greater than the width of the second insulation films included in the NMOSFET.

[**0031**] The semiconductor device suppresses the occurrence of a short channel effect in the PMOSFET. This improves the roll-off characteristic of the PMOSFET to suppress the increase in off-state current, thereby achieving the reduction in power consumption.

[**0032**] According to a second aspect of the present invention, the semiconductor device includes a substrate, a first semiconductor element, and a second semiconductor element. The substrate has a first region with a digital circuit formed therein, and a second region with an analog or RF (radio frequency) circuit formed therein. The first semiconductor element is formed in the first region and constitutes the digital circuit. The second semiconductor element is formed in the second region and constitutes the analog or RF circuit. The first semiconductor element includes a first gate electrode formed on a main surface of the substrate, with a

first gate insulation film therebetween, a first body region formed in the substrate under the first gate electrode, and a pair of first source/drain regions formed in the substrate, with the first body region disposed between the pair of first source/drain regions. The second semiconductor element includes a second gate electrode formed on the main surface of the substrate, with a second gate insulation film therebetween, a second body region formed in the substrate under the second gate electrode, and a pair of second source/drain regions formed in the substrate, with the second body region disposed between the pair of second source/drain regions. The pair of first source/drain regions have a pair of first extensions, respectively, extending toward under the first gate electrode in the main surface of the semiconductor layer. The pair of second source/drain regions have a pair of second extensions, respectively, extending toward under the second gate electrode in the main surface of the semiconductor layer. The amount of overlap between the first gate electrode and the first extensions as viewed in plan is greater than the amount of overlap between the second gate electrode and the second extensions.

[0033] The semiconductor device reduces an effective channel length to shorten delay time, thereby improving the performance for the first semiconductor element constituting the digital circuit.

[0034] Preferably, in the semiconductor device, the first semiconductor element further includes a first sidewall formed on a side surface of the first gate electrode. The second semiconductor element further includes a first insulation film formed on a side surface of the second gate electrode, and a second sidewall formed on the side surface of the second gate electrode, with the first insulation film therebetween.

[0035] In the semiconductor device, performing ion implantation to form the second extensions after the first insulation film serving as an offset insulation film is formed suppresses a gate overlap capacitance for the second semiconductor element constituting the analog or RF circuit.

[0036] Preferably, in the semiconductor device, the first semiconductor element further includes a second insulation film formed between the first gate electrode and the first sidewall, the second insulation film being in contact with the side surface of the first gate electrode. The first insulation film includes a third insulation film formed in contact with the side surface of the second gate electrode, the third insulation film being equal in thickness to the second insulation film, and a fourth insulation film formed between the third insulation film and the second sidewall.

[0037] In the semiconductor device, performing ion implantation to form the first extensions after the second insulation film serving as an offset insulation film is formed suppresses a gate overlap capacitance for the first semiconductor element constituting the digital circuit.

[0038] According to a third aspect of the present invention, the semiconductor device includes a substrate, a semiconductor element, an interlayer insulation film, and a gate interconnect line. The semiconductor element includes (a) a gate electrode formed on a main surface of the substrate, with a gate insulation film therebetween, and extending in a predetermined direction, (b) a first sidewall formed on a side surface of the gate electrode, (c) a body region formed in the substrate under the gate electrode, and (d) a pair of source/drain regions formed in the substrate, with the body region disposed between the pair of source/drain regions. The interlayer insulation film is formed on the substrate to cover the semiconductor element. The gate interconnect line is in contact with an upper surface of the gate electrode and extends in the predetermined direction, the gate interconnect line being formed in the interlayer insulation film. A dimension of the gate interconnect line in a direction of gate length of the gate electrode is greater than the gate length of the gate electrode.

[0039] The semiconductor device decreases a gate resistance to increase the maximum oscillation frequency of the semiconductor element.

[0040] Preferably, the semiconductor device further includes a second sidewall formed on the side surface of the gate electrode, with the first sidewall therebetween.

[0041] In the semiconductor device, the formation of the second sidewall improves a misalignment margin in manufacturing steps of the semiconductor device.

[0042] Preferably, in the semiconductor device, a dimension of the second sidewall in the direction of the gate length is greater than a dimension of the first sidewall in the direction of the gate length.

[0043] The semiconductor device further improves the misalignment margin in the manufacturing steps of the semiconductor device.

[0044] Preferably, the semiconductor device further includes a contact plug connected to the source/drain regions and formed in the interlayer insulation film. The dimension of the gate interconnect line in the direction of the gate length is less than a dimension of the contact plug in the direction of the gate length.

[0045] The semiconductor device reduces an etch rate difference when forming a contact hole for the contact plug and an interconnect trench for the gate interconnect line in the same etching step in the manufacturing process of the semiconductor device.

[0046] According to a fourth aspect of the present invention, the method of manufacturing a semiconductor device includes the following steps (a) to (g). The step (a) is to prepare an SOI substrate having a multi-layer structure including a semiconductor substrate, an insulation layer and a semiconductor layer stacked in the order named. The step (b) is to form a first insulation film on a main surface of the semiconductor layer. The step (c) is to form a gate electrode on the first insulation film. The step (d) is to form a pair of second insulation films having respective inner side surfaces in contact with side surfaces of the gate electrode and respective outer side surfaces out of contact with the side surfaces of the gate electrode, with the gate electrode disposed between the pair of second insulation films, the width of the second insulation films in a direction of gate length being greater than the thickness of the first insulation film. The step (e) is to introduce an impurity into the main surface of the semiconductor layer to form a pair of extensions, the step (e) being performed after the step (d). The step (f) is to form a pair of third insulation films having respective inner side surfaces in contact with the outer side surfaces of the second insulation films and respective outer

side surfaces out of contact with the outer side surfaces of the second insulation films, with the gate electrode and the second insulation films disposed between the pair of third insulation films. The step (g) is to introduce an impurity into the semiconductor layer to form a pair of source/drain regions, the step (g) being performed after the step (f).

[**0047**] In the method according to the present invention, the relatively large width of the second insulation films leads to a relatively long distance between the pair of extensions formed in the step (e). Accordingly increased base width of a parasitic bipolar transistor reduces the gain of the parasitic bipolar transistor, thereby to suppress malfunctions and operating characteristic variations of the MOSFET. Additionally, a decreased amount of overlap between the gate electrode and the extensions as viewed in plan suppresses a gate overlap capacitance to achieve the increase in operating speed and the reduction in power consumption.

[**0048**] Preferably, in the method, the width of the second insulation films formed in the step (d) is in the range of 2/7 to 1 times the gate length.

[**0049**] The method achieves the stable formation of the gate electrode and suppresses the reduction in maximum oscillation frequency.

[**0050**] Preferably, the method further includes the step of (h) forming a lifetime killer in the main surface of the semiconductor layer.

[**0051**] The method, in which the lifetime killer for the parasitic bipolar transistor is formed in the main surface of the semiconductor layer, reduces the gain of the parasitic bipolar transistor.

[**0052**] Preferably, in the method, the step (h) includes the step of etching a portion of the main surface of the semiconductor layer on which the third insulation films are formed.

[**0053**] In the method, etching the portion of the main surface of the semiconductor layer on which the third insulation films are formed creates the lifetime killer in the main surface of the semiconductor layer.

[**0054**] Preferably, in the method, the step (h) includes the step of etching a portion of the main surface of the semiconductor layer positioned outside the outer side surfaces of the third insulation films.

[**0055**] In the method, etching the portion of the main surface of the semiconductor layer positioned outside the outer side surfaces of the third insulation films creates the lifetime killer in the main surface of the semiconductor layer.

[**0056**] Preferably, in the method, the step (h) includes the step of forming a metal-semiconductor compound layer on the source/drain regions.

[**0057**] In the method, forming the metal-semiconductor compound layer on the source/drain regions creates the lifetime killer in the main surface of the semiconductor layer.

[**0058**] Preferably, in the method, the third insulation films are made of silicon nitride, and the step (h) includes the step of forming the third insulation films directly on the main surface of the semiconductor layer.

[**0059**] In the method, stresses caused at an interface between the silicon nitride film and the semiconductor layer create the lifetime killer in the main surface of the semiconductor layer.

[**0060**] Preferably, in the method, the semiconductor device is a MOSFET. The MOSFET includes an NMOSFET and a PMOSFET both formed in the semiconductor layer. The step (d) includes the steps of: (d-**1**) forming the second insulation films having a first width in a region in which the PMOSFET is to be formed; and (d-**2**) forming the second insulation films having a second width greater than the first width in a region in which the NMOSFET is to be formed.

[**0061**] The method suppresses a floating body effect problem in the NMOSFET to achieve the increase in operating speed and an improvement in current driving capability.

[**0062**] Preferably, in the method, the semiconductor device is a MOSFET. The MOSFET includes an NMOSFET and a PMOSFET both formed in the semiconductor layer. The step (d) includes the steps of: (d-**1**) forming the second insulation films having a first width in a region in which the NMOSFET is to be formed; and (d-**2**) forming the second insulation films having a second width greater than the first width in a region in which the PMOSFET is to be formed.

[**0063**] The method suppresses the occurrence of a short channel effect in the PMOSFET. This improves the roll-off characteristic of the PMOSFET to suppress the increase in off-state current, thereby achieving the reduction in power consumption.

[**0064**] According to a fifth aspect of the present invention, the method of manufacturing a semiconductor device includes the following steps (a) to (f). The step (a) is to prepare a substrate having a first region in which a digital circuit is to be formed, and a second region in which an analog or RF circuit is to be formed. The step (b) is to form a first gate electrode on a main surface of the substrate in the first region, with a first gate insulation film therebetween, and a second gate electrode on the main surface of the substrate in the second region, with a second gate insulation film therebetween. The step (c) is to form a first insulation film on a side surface of the second gate electrode. The step (d) is to form a first sidewall on a side surface of the first gate electrode, and a second sidewall on the side surface of the second gate electrode, with the first insulation film therebetween. The step (e) is to introduce an impurity into the main surface of the substrate in the first region to form a pair of first extensions extending toward under the first gate electrode, the step (e) being performed before the step (d). The step (f) is to introduce an impurity into the main surface of the substrate in the second region to form a pair of second extensions extending toward under the second gate electrode, the step (f) being performed after the step (c) and before the step (d).

[**0065**] The method reduces the effective channel length of a semiconductor element constituting the digital circuit to shorten delay time, thereby improving the performance. Additionally, forming the second extensions in the step (f) after the first insulation film serving as an offset insulation film is formed in the step (c) suppresses a gate overlap capacitance for a semiconductor element constituting the analog or RF circuit.

[**0066**] Preferably, the method further includes the step of (g) forming a second insulation film in contact with the side

surface of the first gate electrode, the step (g) being performed before the step (e). The step (c) includes the steps of (c-**1**) forming a third insulation film in contact with the side surface of the second gate electrode, the step (c-**1**) being performed in the same step as the step (g), and (c-**2**) forming a fourth insulation film on the side surface of the second gate electrode, with the third insulation film therebetween.

[**0067**] In the method, forming the first extensions in the step (e) after the second insulation film serving as an offset insulation film is formed in the step (g) suppresses a gate overlap capacitance for the semiconductor element constituting the digital circuit.

[**0068**] According to a sixth aspect of the present invention, the method of manufacturing a semiconductor device includes the following steps (a) to (e). The step (a) is to prepare a substrate. The step (b) is to form a gate electrode extending in a predetermined direction on a main surface of the substrate, with a gate insulation film therebetween. The step (c) is to form a first sidewall on a side surface of the gate electrode. The step (d) is to form an interlayer insulation film on the substrate to cover the gate electrode and the first sidewall. The step (e) is to form a gate interconnect line in the interlayer insulation film, the gate interconnect line being in contact with an upper surface of the gate electrode and extending in the predetermined direction, wherein a dimension of the gate interconnect line in a direction of gate length of the gate electrode is greater than the gate length of the gate electrode.

[**0069**] The method provides a semiconductor device which decreases a gate resistance to increase the maximum oscillation frequency.

[**0070**] Preferably, the method further includes the step of (f) forming a second sidewall on the side surface of the gate electrode, with the first sidewall therebetween, the step (f) being performed before the step (d).

[**0071**] In the method, the formation of the second sidewall improves a misalignment margin in step of forming an interconnect trench for the gate interconnect line.

[**0072**] Preferably, in the method, a dimension of the second sidewall formed in the step (f) in the direction of the gate length is greater than a dimension of the first sidewall in the direction of the gate length.

[**0073**] The method further improves the misalignment margin.

[**0074**] Preferably, the method further includes the steps of: (s) forming a pair of source/drain regions in the substrate, with a body region under the gate electrode disposed between the pair of source/drain regions; and (t) forming a contact plug in the interlayer insulation film, the contact plug being connected to the source/drain regions, the step (t) being performed in the same step as the step (e), wherein a dimension of the contact plug in the direction of the gate length is greater than the dimension of the gate interconnect line in the direction of the gate length.

[**0075**] The method reduces an etch rate difference when forming a contact hole for the contact plug and an interconnect trench for the gate interconnect line in the same etching step.

[**0076**] These and other objects, features, aspects and advantages of the present invention will become more apparent from the following detailed description of the present invention when taken in conjunction with the accompanying drawings.

BRIEF DESCRIPTION OF THE DRAWINGS

[**0077**] **FIG. 1** is a sectional view showing a structure of a semiconductor device according to a first preferred embodiment of the present invention;

[**0078**] **FIG. 2** is a sectional view showing an NMOSFET and a PMOSFET according to the first preferred embodiment as formed on the same SOI substrate;

[**0079**] **FIGS. 3 through 12** are sectional views showing a method of manufacturing the semiconductor device in a step-by-step manner according to the first preferred embodiment;

[**0080**] **FIG. 13** is a sectional view showing a structure of a semiconductor device according to a second preferred embodiment of the present invention;

[**0081**] **FIG. 14** is a top plan view showing a first modification of the semiconductor device according to the second preferred embodiment;

[**0082**] **FIG. 15** is a top plan view showing a second modification of the semiconductor device according to the second preferred embodiment;

[**0083**] **FIG. 16** is a circuit diagram showing an equivalent circuit of a transistor in a simplified form according to a third preferred embodiment of the present invention;

[**0084**] **FIG. 17** is a graph of a silicon oxide film width versus a cutoff frequency and a maximum oscillation frequency as a result of measurements made on a transistor having a gate length of 70 nm;

[**0085**] **FIGS. 18 through 22** are sectional views showing a method of manufacturing a semiconductor device in a step-by-step manner according to a fourth preferred embodiment of the present invention;

[**0086**] **FIG. 23** is a sectional view showing a first modification of the method of manufacturing the semiconductor device according to the fourth preferred embodiment;

[**0087**] **FIG. 24** is a sectional view showing a second modification of the method of manufacturing the semiconductor device according to the fourth preferred embodiment;

[**0088**] **FIG. 25** is a sectional view showing a third modification of the method of manufacturing the semiconductor device according to the fourth preferred embodiment;

[**0089**] **FIG. 26** is a sectional view showing a structure of a semiconductor device according to a fifth preferred embodiment of the present invention;

[**0090**] **FIG. 27** is a sectional view showing a structure of another semiconductor device according to the fifth preferred embodiment of the present invention;

[**0091**] **FIG. 28** is a graph of an offset insulation film width versus delay time as a result of measurements made on a transistor having a gate length of 70 nm;

[**0092**] **FIG. 29** is a sectional view showing a structure of a semiconductor device according to a sixth preferred embodiment of the present invention;

[0093] **FIGS. 30 through 35** are sectional views showing a method of manufacturing the semiconductor device in a step-by-step manner according to the sixth preferred embodiment;

[0094] **FIG. 36** is a schematic top plan view showing a structure of a semiconductor device according to a seventh preferred embodiment of the present invention;

[0095] **FIG. 37** is a sectional view of the structure taken along the line A1-A1 of **FIG. 36**;

[0096] **FIG. 38** is a sectional view of the structure taken along the line A2-A2 of FIG. **36**;

[0097] **FIGS. 39 through 43** are sectional views showing a method of manufacturing the semiconductor device in a step-by-step manner according to the seventh preferred embodiment;

[0098] **FIG. 44** is a sectional view showing a structure of a background art semiconductor device;

[0099] **FIG. 45** is a sectional view showing a structure of another background art semiconductor device; and

[0100] **FIG. 46** is a schematic top plan view showing a top surface structure of the semiconductor device shown in **FIG. 45**.

DESCRIPTION OF THE PREFERRED EMBODIMENTS

[0101] First Preferred Embodiment

[0102] **FIG. 1** is a sectional view showing a structure of a semiconductor device according to a first preferred embodiment of the present invention An SOI substrate **4** has a multi-layer structure such that a silicon substrate **1**, a BOX layer **2** and a single-crystalline silicon layer **3** are stacked in the order named. The single-crystalline silicon layer **3** may be replaced with a polycrystalline or amorphous silicon layer. A completely isolating insulation film **5** made of silicon oxide is partially formed in the silicon layer **3**. The isolating insulation film **5** extends from the upper surface of the silicon layer **3** to the upper surface of the BOX layer **2**.

[0103] A MOSFET is formed in a device region defined by the isolating insulation film **5** in a manner to be specifically described below. A silicon oxide film **6** is formed partially on the upper surface of the silicon layer **3**. A gate electrode **7** made of polysilicon is formed partially on the silicon oxide film **6**. A portion of the silicon oxide film **6** which lies under the gate electrode **7** functions as a gate insulation film. A silicon nitride film **9** is formed on each side surface of the gate electrode **7**, with a silicon oxide film **8** therebetween. The silicon oxide film **8** and the silicon nitride film **9** are formed on the silicon oxide film **6**. The width W1 of the silicon oxide film **8** in a direction of the gate length (or in the lateral direction as viewed in the drawing) is greater than the thickness T1 of the silicon oxide film **6**.

[0104] Side surfaces of the silicon oxide films **8** which are in contact with the side surfaces of the gate electrode **7** are herein defined as "inner side surfaces," and side surfaces thereof which are out of contact with the side surfaces of the gate electrodes **7** are defined as "outer side surfaces." Side surfaces of the silicon nitride films **9** which are in contact with the outer side surfaces of the silicon oxide films **8** are herein defined as "inner side surfaces," and side surfaces thereof which are out of contact with the outer side surfaces of the silicon oxide films **8** are defined as "outer side surfaces."

[0105] A pair of source/drain regions **10** are formed in the silicon layer **3**. A region between the pair of source/drain regions **10** is defined as a body region **12**. Each of the source/drain regions **10** has an extension (or LDD when having a relatively low impurity concentration) **11** extending from under the outer side surface of a corresponding one of the silicon oxide films **8** toward the body region **12** in the upper surface of the silicon layer **3**.

[0106] **FIG. 2** is a sectional view showing an NMOSFET and a PMOSFET according to the first preferred embodiment as formed on the same SOI substrate **4**. The NMOSFET is formed in a device region defined by the left-hand isolating insulation film **5** and the middle isolating insulation film **5** as viewed in **FIG. 2**, and the PMOSFET is formed in a device region defined by the right-hand isolating insulation film **5** and the middle isolating insulation film **5**. The NMOSFET and the PMOSFET are identical in construction with the structure shown in **FIG. 1**.

[0107] **FIGS. 3 through 12** are sectional views showing a method of manufacturing the semiconductor device shown in **FIG. 2** in a step-by-step manner. Referring first to **FIG. 3**, the SOI substrate **4** is prepared, and then the isolating insulation film **5** are formed in the silicon layer **3**. Next, a silicon oxide film **13** is formed entirely on the upper surface of the silicon layer **3** and the upper surface of the isolating insulation film **5** by a CVD process or a thermal oxidation process. A silicon oxynitride film, a metal oxide film such as Al_2O_3 or a ferroelectric film such as Ta_2O_5 and BST may be formed in place of the silicon oxide film **13**. Next, a polysilicon film **14** having a thickness of about 100 nm to about 400 nm is formed entirely on the upper surface of the silicon oxide film **13** by an LPCVD process. The polysilicon film **14** may be doped with an impurity such as P and B. A metal film such as W, Ta and Al may be formed in place of the polysilicon film **14**. Next, photoresists **15***a* and **15***b* are formed partially on the upper surface of the polysilicon film **14** by a photolithographic process. The photoresists **15***a* and **15***b* are formed over regions in which respective gate electrodes **7***a* and **7***b* are to be formed.

[0108] With reference to **FIG. 4**, using the photoresists **15***a* and **15***b* as an etch mask, an anisotropic dry etching process, such as RIE (Reactive Ion Etching) or ECR (Electron Cyclotron Resonance), which exhibits a higher etch rate in a direction of depth of the SOI substrate **4** is performed to etch the polysilicon film **14**. This leaves unetched portions of the polysilicon film **14** which lie under the photoresists **15***a* and **15***b* to form the gate electrodes **7***a* and **7***b*. This anisotropic dry etching process slightly etches the upper surface of the silicon oxide film **13**. Thereafter, the photoresists **15***a* and **15***b* are removed. The gate electrodes **7***a* and **7***b* may be formed by another technique of forming an insulation film on the upper surface of the polysilicon film **14**, patterning the insulation film by a photolithographic process and an etching process, and anisotropically etching the polysilicon film **14** using the patterned insulation film as a hard mask.

[0109] Next, referring to **FIG. 5, a** silicon oxide film **16** is formed on the entire top surface of the resultant structure by a CVD process or a thermal oxidation process. An HTO film,

an LTO film, a TEOS film or a plasma oxide film may be formed in place of the silicon oxide film **16**.

[**0110**] Referring to **FIG. 6**, the silicon oxide film **16** is etched by an anisotropic dry etching process which exhibits a higher etch rate in the direction of depth of the SOI substrate **4**. This forms silicon oxide films **8***a* and **8***b* on the side surfaces of the gate electrodes **7***a* and **7***b*. In this process, etching may be stopped before the upper surface of the silicon oxide film **13** and the upper surfaces of the gate electrodes **7***a* and **7***b* are exposed, so that the silicon oxide film **16** is left thin on the upper surface of the silicon oxide film **13** and the upper surfaces of the gate electrodes **7***a* and **7***b*.

[**0111**] Next, with reference to **FIG. 7, a** photoresist **17** is formed on a future PMOSFET region by a photolithographic process. Then, using the photoresist **17** as an implant mask, ions of p-type impurity such as B, BF_2 and In are implanted under conditions of 1×10^{12} to 1×10^{14} cm^{-2} to form a pocket region (not shown) in the silicon layer **3** in a future NMOSFET region. The pocket region is formed to suppress a short channel effect resulting from device size reduction. Next, n-type ions **18** such as As, P and Sb are implanted under conditions of 1×10^{13} to 1×10^{15} cm^{-2} to form extensions **11***a* in the silicon layer **3** in the future NMOSFET region. In this ion implantation process, the photoresist **17**, the gate electrode **7***a*, the silicon oxide films **8***a* and the isolating insulation film **5** act as an implant mask. As a result, the extensions **11***a* are formed in the upper surface of the silicon layer **3** except where the gate electrode **7***a*, the silicon oxide films **8***a* and the isolating insulation film **5** are formed, but have respective inner ends (or ends on the gate electrode **7***a* side) inwardly from the outer side surfaces of the silicon oxide films **8***a*.

[**0112**] Alternatively, a silicon oxide film having a predetermined thickness may be formed on the entire top surface of the resultant structure by a CVD process before forming the photoresist **17** and after the structure shown in **FIG. 6** is provided, thereby to control where to form the pocket region and the extensions **11***a* in the silicon layer **3**. It is not necessary to form the pocket region when suppressing the short channel effect by adjusting a source/drain junction depth, a gate insulation film thickness and the like.

[**0113**] With reference to **FIG. 8**, after the photoresist **17** is removed, a photoresist **19** is formed on the future NMOSFET region by a photolithographic process. Then, using the photoresist **19** as an implant mask, ions of n-type impurity such as As, P and Sb are implanted under conditions of 1×10^{12} to 1×10^{14} cm^{-2} to form a pocket region (not shown) in the silicon layer **3** in the future PMOSFET region. Next, p-type ions **20** such as B, BF_2 and In are implanted under conditions of 1×10^{12} to 1×10^{14} cm^{-2} to form extensions **11***b* in the silicon layer **3** in the future PMOSFET region. In this ion implantation process, the photoresist **19**, the gate electrode **7***b*, the silicon oxide films **8***b* and the isolating insulation film **5** act as an implant mask. As a result, the extensions **11***b* are formed in the upper surface of the silicon layer **3** except where the gate electrode **7***b*, the silicon oxide films **8***b* and the isolating insulation film **5** are formed, but have respective inner ends (or ends on the gate electrode **7***b* side) inwardly from the outer side surfaces of the silicon oxide films **8***b*. As stated above, where to form the pocket region and the extensions **11***b* in the silicon layer **3** may be controlled. Also, the formation of the pocket region may be dispensed with, as stated above.

[**0114**] Referring to **FIG. 9**, after the photoresist **19** is removed, a silicon nitride film **21** is formed on the entire top surface of the resultant structure by a CVD process. With reference to **FIG. 10**, an anisotropic dry etching process which exhibits a higher etch rate in the direction of depth of the SOI substrate **4** is performed to etch the silicon nitride film **21** and the silicon oxide film **13** in the order named until the upper surface of the silicon layer **3** is exposed. This forms silicon nitride films **9***a* and **9***b* serving as sidewall insulation films on the outer side surfaces of the silicon oxide films **8***a* and **8***b*. The silicon nitride films **9***a* and **9***b* are formed on the silicon oxide films **6***a* and **6***b*.

[**0115**] Next, with reference to **FIG. 11, a** photoresist **22** is formed on the future PMOSFET region by a photolithographic process. Then, using the photoresist **22** as an implant mask, n-type ions **23** such as As, P and Sb are implanted under conditions of 1×10^{14} to 1×10^{16} cm^{-2} to form source/drain regions **10***a* in the silicon layer **3** in the future NMOSFET region. The extensions **11***a* become portions of the source/drain regions **10***a*.

[**0116**] With reference to **FIG. 12**, after the photoresist **22** is removed, a photoresist **24** is formed on the future NMOSFET region by a photolithographic process. Then, using the photoresist **24** as an implant mask, p-type ions **25** such as B, BF_2 and In are implanted under conditions of 1×10^{14} to 1×10^{16} cm^{-2} to form source/drain regions **10***b* in the silicon layer **3** in the future PMOSFET region. The extensions **11***b* become portions of the source/drain regions **10***b*.

[**0117**] Finally, after the photoresist **24** is removed, annealing is performed at about 800 to 1150° C. to activate the impurities introduced into the silicon layer **3**. Then, the steps of forming a metal silicide on the upper surfaces of the source/drain regions **10***a*, **10***b* and the gate electrodes **7***a*, **7***b* and providing interconnections are performed to complete the semiconductor device.

[**0118**] In the method of manufacturing the semiconductor device according to the first preferred embodiment, as discussed above, the extensions **11***a* and **11***b* are formed in the steps shown in **FIGS. 7 and 8** after the relatively wide silicon oxide films **8***a* and **8***b* are formed on the side surfaces of the gate electrodes **7***a* and **7***b* in the step shown in **FIG. 6**. This makes a distance L1 between the pair of source/drain regions **10** (more specifically, between the pair of extensions **11**) as shown in **FIG. 1** greater than the distance L**101** (see **FIG. 44**) in the background art semiconductor device.

[**0119**] Accordingly increased base width of a parasitic bipolar transistor leads to the reduction in the gain of the parasitic bipolar transistor, thereby suppressing malfunctions and operating characteristic variations of the MOSFET.

[**0120**] Additionally, a reduced overlap between the gate electrode **7** and the extensions **11** as viewed in plan suppresses a gate overlap capacitance to achieve the increase in operating speed and the reduction in power consumption. Moreover, the semiconductor device according to the first preferred embodiment employs the SOI substrate **4**, rather than a common bulk substrate. The semiconductor device with the SOI substrate **4** has a lower source/drain junction capacitance since the lower surfaces of the source/drain

regions **10** are in contact with the BOX layer **2**, as illustrated in **FIG. 1**. The semiconductor device with the SOI substrate **4** accordingly has a total parasitic capacitance lower than that of the semiconductor device with the bulk substrate. To attain an optimum width of the silicon oxide film **8** for delay time, the method of manufacturing the semiconductor device according to the first preferred embodiment can form the wider silicon oxide films **8** in contact with the side surfaces of the gate electrode **7**, as compared with a method of manufacturing the semiconductor device with the bulk substrate. As a result, the method according to the first preferred embodiment effectively prevents the gate electrode **7** from falling down by an ashing process or an RCA cleaning process even if the gate length of the gate electrode **7** is reduced by the device size reduction.

[**0121**] With reference to **FIGS. 44 and 45** regarding the background art, simply increasing the thickness of the silicon oxide film **108** increases the distance L**101**, in which case, however, a higher implant energy is required in the step of ion implantation for the formation of the extensions **111**. Accordingly, the greater range of ions makes it difficult to form the shallow extensions **111** in the upper surface of the silicon layer **103**, resulting in the occurrence of the short channel effect. On the other hand, the method according to the first preferred embodiment can form the shallow extensions **11** in the upper surface of the silicon layer **3** to suppress the short channel effect.

[**0122**] Second Preferred Embodiment

[**0123**] **FIG. 13** is a sectional view showing a structure of a semiconductor device according to a second preferred embodiment of the present invention. The semiconductor device shown in **FIG. 13** has a partially isolating insulation film **30** in place of the completely isolating insulation film **5** shown in **FIG. 1**. The remaining structure of the semiconductor device according to the second preferred embodiment is similar to the corresponding structure of the above-stated semiconductor device according to the first preferred embodiment shown in **FIG. 1**. The semiconductor device according to the second preferred embodiment may be manufactured by performing the steps shown in **FIGS. 3 through 12** except that the isolating insulation film **30** is formed in place of the isolating insulation film **5** in the step shown in **FIG. 3**.

[**0124**] The use of the partially isolating insulation film **30** allows the body region **12** to be tied to a fixed potential through a portion of the silicon layer **3** which lies between the lower surface of the isolating insulation film **30** and the upper surface of the BOX layer **2** from a body contact region (not shown). This suppresses a so-called floating body effect such as the occurrence of a kink effect and variations in delay time depending on an operating frequency.

[**0125**] The semiconductor device according to the second preferred embodiment produces effects to be described below in addition to the effects produced by the semiconductor device and the method of manufacturing the same according to the first preferred embodiment. The increased distance L1 results in a decreased body resistance in a vertical direction as viewed in **FIG. 13**. This reduces a problem such that the threshold voltage of the MOSFET differs depending on the distance from the body contact region.

[**0126**] **FIG. 14** is a top plan view showing a first modification of the semiconductor device according to the second preferred embodiment. The semiconductor device shown in **FIG. 14** employs the completely isolating insulation film **5**, rather than the partially isolating insulation film **30**. The gate electrode **7** used in this modification is an H-shaped gate having a central portion with wider opposite end portions. To fix the potential of the body region **12**, a pair of body contact regions **31** in direct contact with the body region **12** are formed at the respective end portions of the gate electrode **7**.

[**0127**] **FIG. 15** is a top plan view showing a second modification of the semiconductor device according to the second preferred embodiment. The semiconductor device shown in **FIG. 15** employs the completely isolating insulation film **5**, rather than the partially isolating insulation film **30**. The gate electrode **7** used in this modification is a T-shaped gate having a central portion with one wider end portion. To fix the potential of the body region **12**, a body contact region **31** in direct contact with the body region **12** is formed at the one wider end portion of the gate electrode **7**.

[**0128**] The semiconductor devices shown in **FIGS. 14 and 15** may employ the cross-sectional structure shown in **FIG. 13** to reduce the body resistance, thereby reducing the problem such that the threshold voltage of the MOSFET differs depending on the distance from the body contact region(s) **31**.

[**0129**] Third Preferred Embodiment

[**0130**] A third preferred embodiment according to the present invention will describe a relationship between the gate length of the gate electrode **7** and the width W1 of the silicon oxide film **8** in the direction of the gate length.

[**0131**] **FIG. 16** is a circuit diagram showing an equivalent circuit of a transistor in a simplified form. In **FIG. 16**, R_g denotes a gate resistance; R_l denotes a channel resistance; R_s denotes a source resistance; g_m denotes a mutual conductance; g_{ds} denotes a drain-source conductance; C_{gs} denotes a gate-source capacitance; and C_{gd} denotes a gate-drain capacitance. In general, a cutoff frequency f_t and a maximum oscillation frequency f_{max} are measures of the performance of a transistor. With reference to **FIG. 16**, the cutoff frequency f_t and the maximum oscillation frequency f_{max} are expressed respectively by

$$f_t = \frac{g_m}{2\pi C_{gs}} \text{ and} \tag{1}$$

$$f_{max} = \frac{f_t}{2\sqrt{g_{ds}(R_g + R_s + R_l) + 2\pi f_t R_g C_{gd}}} \tag{2}$$

[**0132**] As the width W1 of the silicon oxide film **8** is increased, the mutual conductance g_m decreases because of an increased effective channel length. From Equation (1), increasing the width W1 of the silicon oxide film **8** decreases the cutoff frequency f_t. From Equation (2), decreasing the cutoff frequency f_t also decreases the maximum oscillation frequency f_{max}. However, as the width W1 of the silicon oxide film **8** is increased, a gate-drain overlap capacitance (corresponding to the above capacitance C_{gd}) decreases, and the drain-source conductance g_{ds} also decreases because of the suppressed short channel effect. Thus, there is a trade-off

between the cutoff frequency f_t, and the gate-drain overlap capacitance C_{gd} and drain-source conductance g_{ds}. Therefore, an optimum value for the width **W1** of the silicon oxide film **8** exits to improve the maximum oscillation frequency f_{max}.

[**0133**] **FIG. 17** is a graph of the width **W1** of the silicon oxide film **8** versus the cutoff frequency f_t and maximum oscillation frequency f_{max} as a result of measurements made on a transistor having a gate length Lg=70 nm. To prevent the gate electrode **7** from falling down by an ashing process or an RCA cleaning process, it is desirable that the width **W1** of the silicon oxide film **8** is greater. However, as the width **W1** of the silicon oxide film **8** is too great, the maximum oscillation frequency f_{max} decreases, as illustrated in **FIG. 17**. It is hence desirable to set the width **W1** of the silicon oxide film **8** at about 20 nm in the light of the stable formation of the gate electrode **7** and the suppression of the decrease in the maximum oscillation frequency f_{max}. In this case, the ratio of the gate length Lg to the width **W1** of the silicon oxide film **8** is 1 to 2/7.

[**0134**] Next, consideration will be given to a situation in which the gate electrode **7** is reduced in size. In accordance with the scaling law, as the gate length Lg decreases with further size reduction, the width **W1** of the silicon oxide film **8** should decrease accordingly. However, the ion implantation for the formation of the extensions **11** uses sub-keV implant energy at present, and it is difficult to further decrease the implant energy. For heat treatment, RTA (Rapid Thermal Annealing) techniques are currently used, and it is also difficult to further shorten the time for heat treatment. For these reasons, difficulties lie in forming the shallow source/drain regions **10** in accordance with the scaling law even if the gate electrode **7** is reduced in size, and a source/drain profile is not considered to change so greatly. Further, decreasing the width **W1** of the silicon oxide film **8** in accordance with the scaling law increases the gate overlap capacitance to slow down the operating speed of the transistor. For the above-mentioned reasons, the optimum value for the width **W1** of the silicon oxide film **8** is considered to remain at 20 nm even if the device size is further reduced. Therefore, even in the case of the size reduction to the shortest gate length (Lg=20 nm) which allows the MOS transistor to operate, the optimum value for the width **W1** of the silicon oxide film **8** is about 20 nm, in which case the ratio of the gate length Lg to the width **W1** of the silicon oxide film **8** is 1 to 1.

[**0135**] Thus, the semiconductor device according to the third preferred embodiment, in which the width **W1** of the silicon oxide film **8** is set in the range of 2/7 to 1 times the gate length Lg of the gate electrode **7**, can achieve the stable formation of the gate electrode **7** and suppress the reduction in the maximum oscillation frequency f_{max}.

[**0136**] Fourth Preferred Embodiment

[**0137**] **FIGS. 18 through 22** are sectional views showing a method of manufacturing a semiconductor device in a step-by-step manner according to a fourth preferred embodiment of the present invention. Referring first to **FIG. 18**, the gate electrode **7** is formed by the process described in the first preferred embodiment, and thereafter the silicon oxide film **16** is formed on the entire top surface of the resultant structure by a CVD process.

[**0138**] Referring to **FIG. 19**, the silicon oxide film **16** is etched by an anisotropic dry etching process which exhibits a higher etch rate in the direction of depth of the SOI substrate **4**. This forms the silicon oxide films **8** on the side surfaces of the gate electrode **7**. The anisotropic dry etching process for formation of the silicon oxide films **8** is continued to overetch the upper surface of the silicon layer **3** exposed by the etching of the silicon oxide film **16**. The etching causes damages to create defects in the upper surface of the silicon layer **3**.

[**0139**] With reference to **FIG. 20**, the extensions **11** are formed in the upper surface of the silicon layer **3** by an ion implantation process. Referring to **FIG. 21, a** silicon oxide film and a silicon nitride film are formed in the order named on the entire top surface of the resultant structure by a CVD process. Next, an anisotropic dry etching process which exhibits a higher etch rate in the direction of depth of the SOI substrate **4** is performed to etch the silicon oxide film and the silicon nitride film until the upper surface of the silicon layer **3** is exposed. This forms silicon oxide films **40** and the silicon nitride films **9** on the outer side surfaces of the silicon oxide films **8**. Referring to **FIG. 22**, the source/drain regions **10** are formed in the silicon layer **3** by an ion implantation process.

[**0140**] In the method of manufacturing the semiconductor device according to the fourth preferred embodiment, as discussed above, the etching process for the formation of the silicon oxide films **8** etches the upper surface of the silicon layer **3** as well to create defects in the upper surface of the silicon layer **3**. As a result, the defects act as lifetime killers for the parasitic bipolar transistor to reduce the gain of the parasitic bipolar transistor. The technique of the fourth preferred embodiment is applicable to any one of the first to third preferred embodiments.

[**0141**] **FIG. 23** is a sectional view showing a first modification of the method of manufacturing the semiconductor device according to the fourth preferred embodiment. The silicon nitride films **9** shown in **FIG. 21** are formed on the upper surface of the silicon layer **3**, with the silicon oxide films **40** therebetween. In the first modification of the fourth preferred embodiment, on the other hand, the silicon nitride films **9** are formed directly on the upper surface of the silicon layer **3**. The technique of the first modification of the fourth preferred embodiment is applicable to any one of the first to fourth preferred embodiments.

[**0142**] In the first modification of the fourth preferred embodiment, stresses caused at an interface between the lower surface of the silicon nitride films **9** and the upper surface of the silicon layer **3** create more lifetime killers in the upper surface of the silicon layer **3**, to further reduce the gain of the parasitic bipolar transistor. This suppresses the floating body effect which is a problem with SOI devices. Suppression of the floating body effect brings about the advantages of suppressing a transient effect, the kink effect and a hot carrier effect and improving the current driving capability.

[**0143**] **FIG. 24** is a sectional view showing a second modification of the method of manufacturing the semiconductor device according to the fourth preferred embodiment. The anisotropic dry etching process for the formation of the silicon nitride films **9** in the technique shown in **FIGS. 22 and 23** is stopped when the upper surface of the silicon layer **3** is exposed. In the second modification of the fourth preferred embodiment, on the other hand, the anisotropic dry

etching process for the formation of the silicon nitride films **9** overetches the upper surface of the silicon layer **3** as well. The technique of the second modification of the fourth preferred embodiment is applicable to any one of the first to fourth preferred embodiments and the first modification of the fourth preferred embodiment.

[**0144**] In the second modification of the fourth preferred embodiment, etching the upper surface of the silicon layer **3** as well when forming the silicon nitride films **9** creates more lifetime killers in the upper surface of the silicon layer **3**, to further reduce the gain of the parasitic bipolar transistor.

[**0145**] **FIG. 25** is a sectional view showing a third modification of the method of manufacturing the semiconductor device according to the fourth preferred embodiment. In the third modification of the fourth preferred embodiment, after the source/drain regions **10** are formed in the silicon layer **3**, metal silicide layers **45** are formed by silicidation of the upper surface of the source/drain regions **10**. This silicidation process causes silicidation of the upper surface of the gate electrode **7** as well to form a metal silicide layer **46**. The technique of the third modification of the fourth preferred embodiment is applicable to any one of the first to fourth preferred embodiments and the first and second modifications of the fourth preferred embodiment.

[**0146**] In the third modification of the fourth preferred embodiment, the silicidation of the upper surface of the source/drain regions **10** creates more lifetime killers in the upper surface of the silicon layer **3**, to further reduce the gain of the parasitic bipolar transistor.

[**0147**] The first to third modifications of the fourth preferred embodiment are intended to create a large number of lifetime killers in the upper surface of the silicon layer **3** to reduce the gain of the parasitic bipolar transistor. The increase in the number of lifetime killers, however, has the drawback of increasing junction leakage. It is, hence, necessary to select an optimum structure in consideration for both the advantage of increasing the operating speed by suppressing the floating body effect and the drawback of increasing power consumption resulting from the increase in junction leakage.

[**0148**] Fifth Preferred Embodiment

[**0149**] In the semiconductor device according to the first preferred embodiment shown in **FIG. 2**, the width of the silicon oxide films **8***a* of the NMOSFET is equal to the width of the silicon oxide films **8***b* of the PMOSFET. A semiconductor device with these widths different from each other depending on purposes will be described according to a fifth preferred embodiment of the present invention.

[**0150**] **FIG. 26** is a sectional view showing a structure of a semiconductor device according to the fifth preferred embodiment of the present invention. The structure shown in **FIG. 26** includes, in place of the silicon oxide films **8***b* shown in **FIG. 2**, silicon oxide films **8***bb* having a width **W3** less than the width **W1** of the silicon oxide films **8***a*. A distance **L3** between the pair of source/drain regions **10***b* is accordingly shorter than the distance **L1** between the pair of source/drain regions **10***a*. The silicon oxide films **8***bb* having the smaller width may be produced, for example, by wet etching the silicon oxide films **8***b* in the step shown in **FIG. 8**.

[**0151**] **FIG. 27** is a sectional view showing a structure of another semiconductor device according to the fifth preferred embodiment of the present invention. The structure shown in **FIG. 27** includes, in place of the silicon oxide films **8***a* shown in **FIG. 2**, silicon oxide films **8***aa* having a width **W4** less than the width **W1** of the silicon oxide films **8***b*. A distance **L4** between the pair of source/drain regions **10***a* is accordingly shorter than the distance **L1** between the pair of source/drain regions **10***b*. The silicon oxide films **8***aa* having the smaller width may be produced, for example, by wet etching the silicon oxide films **8***a* in the step shown in **FIG. 7**.

[**0152**] The problem of the floating body effect is more prone to occur in the NMOSFET than in the PMOSFET since the parasitic bipolar transistor is easily operated by holes generated by impact ionization near the drain in the NMOSFET. Therefore, making the width of the silicon oxide films **8***a* of the NMOSFET greater than that of the silicon oxide films **8***bb* of the PMOSFET as in the semiconductor device shown in **FIG. 26** reduces the problem of the floating body effect in the NMOSFET to improve the operating speed and the current driving capability.

[**0153**] The short channel effect is more prone to occur in the PMOSFET than in the NMOSFET. Therefore, making the width of the silicon oxide films **8***b* of the PMOSFET greater than that of the silicon oxide films **8***aa* of the NMOSFET as in the semiconductor device shown in **FIG. 27** suppresses the occurrence of the short channel effect in the PMOSFET. This improves the roll-off characteristic of the PMOSFET to suppress the increase in off-state current, thereby achieving the reduction in power consumption.

[**0154**] Sixth Preferred Embodiment

[**0155**] The relationship between the width **W1** of the silicon oxide film **8** serving as an offset insulation film, and the cutoff frequency f_t and maximum oscillation frequency f_{max} is illustrated in **FIG. 17**. The cutoff frequency f_t and maximum oscillation frequency f_{max} are used as an indicator which indicates the performance of analog circuits and radio-frequency circuits, although the analog circuits will be typically described hereinafter. Examples of the analog circuits include a PLL (phase-locked loop) circuit and a sense amplifier. On the other hand, an inverter delay time t_{pd} is often used as a measure of the performance of digital circuits. The delay time t_{pd} is expressed as

$$t_{pd} = \frac{CV_{DD}}{I} \tag{3}$$

[**0156**] where C is a total capacitance, V_{DD} is a power supply voltage, and I is the current driving capability.

[**0157**] **FIG. 28** is a graph of the width **W1** of the offset insulation film versus the delay time t_{pd} as a result of measurements made on a transistor having a gate length Lg=70 nm. It will be found from the graph that the smaller the width **W1** of the offset insulation film, the shorter the delay time t_{pd}.

[**0158**] With reference to Equation (3), decreasing the width of the offset insulation film increases the gate overlap capacitance and thereby to increase the total capacitance C.

This should increase the delay time t_{pd}. However, decreasing the width of the offset insulation film decreases the effective channel length to increase the current driving capability I. This influence is exerted more strongly than the influence of the increase in total capacitance C. As a result, the smaller the width W1 of the offset insulation film is, the shorter the delay time t_{pd} becomes, as shown in **FIG. 28**.

[**0159**] From the foregoing, the digital circuits show that the smaller the width of the offset insulation film is, the shorter the delay time t_{pd} becomes which in turn improves the performance of the circuits. Thus, there is a difference in optimum value for the width of the offset insulation film between a transistor constituting an analog circuit (or a radio-frequency circuit) and a transistor constituting a digital circuit. Based on these facts, description will be given on the semiconductor device including an analog circuit (or a radio-frequency circuit) and a digital circuit both formed on the same substrate, with a difference produced between the width of the offset insulation film of a transistor constituting the analog circuit (or radio-frequency circuit) and the width of the offset insulation film of a transistor constituting the digital circuit according to a sixth preferred embodiment of the present invention. The structure according to the sixth preferred embodiment is applicable to the semiconductor device of any one of the first to firth preferred embodiments.

[**0160**] **FIG. 29** is a sectional view showing a structure of the semiconductor device according to the sixth preferred embodiment. The SOI substrate **4** has a digital circuit region in which the digital circuit is formed and an analog circuit region in which the analog circuit is formed. The digital circuit region and the analog circuit region are electrically isolated from each other by an isolating insulation film **50** with a completely isolating portion **51** formed partially on the lower surface thereof.

[**0161**] The digital circuit region will be described first. A MOSFET constituting the digital circuit is formed in a device region defined by the isolating insulation films **30** and **50**. The MOSFET has a gate electrode **53** of polysilicon formed on the upper surface of the silicon layer **3**, with a gate oxide film **52** of silicon oxide therebetween; a body region **58** formed in the silicon layer **3** under the gate electrode **53**; and a pair of source/drain regions **60** formed in the silicon layer **3**, with the body region **58** disposed therebetween. The pair of source/drain regions **60** have a pair of extensions **59**, respectively, which are formed in the upper surface of the silicon layer **3** and extend to under the gate electrode **53**.

[**0162**] A silicon oxide film **54** serving as the offset insulation film is formed in contact with each side surface of the gate electrode **53**. A silicon oxide film **55** is formed outside the silicon oxide film **54**, and a sidewall including a silicon oxide film **56** and a silicon nitride film **57** is formed outside the silicon oxide film **55**.

[**0163**] The analog circuit region will be described next. A MOSFET constituting the analog circuit is formed in a device region defined by the isolating insulation films **30** and **50**. The MOSFET has a gate electrode **63** of polysilicon formed on the upper surface of the silicon layer **3**, with a gate oxide film **62** of silicon oxide therebetween; a body region **68** formed in the silicon layer **3** under the gate electrode **63**; and a pair of source/drain regions **70** formed in the silicon layer **3**, with the body region **68** disposed therebetween. The pair of source/drain regions **70** have a pair of extensions **69**, respectively, which are formed in the upper surface of the silicon layer **3** and extend to under the gate electrode **63**. The gate length of the gate electrode **63** is equal to the gate length of the gate electrode **53**.

[**0164**] A silicon oxide film **64** serving as a first offset insulation film is formed in contact with each side surface of the gate electrode **63**. A silicon oxide film **65** serving as a second offset insulation film is formed outside the silicon oxide film **64**. The silicon oxide film **64** is equal in thickness to the silicon oxide film **54**, and the silicon oxide film **65** is equal in thickness to the silicon oxide film **55**. A sidewall including a silicon oxide film **66** and a silicon nitride film **67** is formed outside the silicon oxide film **65**.

[**0165**] The amount (or a dimension K1) of overlap between the gate electrode **53** and the extensions **59** as viewed in plan (or as viewed from above the gate electrode) is greater than the amount (or a dimension K2) of overlap between the gate electrode **63** and the extensions **69** as viewed in plan. As a result, the effective channel length of the MOSFET formed in the digital circuit region is less than that of the MOSFET formed in the analog circuit region.

[**0166**] **FIGS. 30 through 35** are sectional views showing a method of manufacturing the semiconductor device in a step-by-step manner according to the sixth preferred embodiment. Referring first to **FIG. 30**, the SOI substrate **4** is prepared, and then the isolating insulation films **30** and **50** are formed in the silicon layer **3**.

[**0167**] With reference to **FIG. 31, a** silicon oxide film is formed entirely on the upper surface of the silicon layer **3** and the upper surfaces of the isolating insulation films **30**, **50** by a CVD process or a thermal oxidation process. A silicon oxynitride film, a metal oxide film such as Al_2O_3 or a ferroelectric film such as Ta_2O_5 and BST may be formed in place of the silicon oxide film. Next, a polysilicon film having a thickness of about 100 nm to about 400 nm is formed entirely on the upper surface of the silicon oxide film by an LPCVD process. The polysilicon film may be doped with an impurity such as P and B. A metal film such as W, Ta and Al may be formed in place of the polysilicon film. Next, the polysilicon film and the silicon oxide film are patterned by a photolithographic process and an anisotropic dry etching process to form the gate electrodes **53**, **63** and the gate oxide films **52**, **62**.

[**0168**] Next, a silicon oxide film having a thickness of several to tens of nanometers are formed on the entire top surface of the resultant structure, and is etched by an anisotropic dry etching process which exhibits a higher etch rate in the direction of depth of the SOI substrate **4**. This forms the silicon oxide film **54** in contact with each side surface of the gate electrode **53**, and the silicon oxide film **64** in contact with each side surface of the gate electrode **63**. The silicon oxide film **54** functions as the offset insulation film for the formation of the extensions **59** in a later step. The silicon oxide film **64** functions as the first offset insulation film for the formation of the extensions **69** in a later step.

[**0169**] Next, with reference to **FIG. 32, a** photoresist **71** is formed on the silicon layer **3** in the analog circuit region by a photolithographic process to cover the gate electrode **63** and the silicon oxide film **64**. Then, ions of impurity such as

As, P and Sb (for the formation of an NMOS transistor) are implanted to form the extensions **59** in the upper surface of the silicon layer **3** in the digital circuit region.

[**0170**] With reference to **FIG. 33**, after the photoresist **71** is removed, a silicon oxide film having a thickness of several to tens of nanometers are formed on the entire top surface of the resultant structure, and is etched by an anisotropic dry etching process which exhibits a higher etch rate in the direction of depth of the SOI substrate **4**. This forms the silicon oxide film **55** outside the silicon oxide film **54**, and the silicon oxide film **65** outside the silicon oxide film **64**. The silicon oxide film **65** functions as the second offset insulation film for the formation of the extensions **69** in a later step.

[**0171**] Next, with reference to **FIG. 34, a** photoresist **72** is formed on the silicon layer **3** in the digital circuit region by a photolithographic process to cover the gate electrode **53** and the silicon oxide films **54**, **55**. Then, ions of impurity such as As, P and Sb (for the formation of an NMOS transistor) are implanted to form the extensions **69** in the upper surface of the silicon layer **3** in the analog circuit region.

[**0172**] Referring to **FIG. 35**, after the photoresist **72** is removed, a silicon oxide film and a silicon nitride film are formed in the order named on the entire top surface of the resultant structure. Next, an anisotropic dry etching process is performed to etch the silicon oxide film and the silicon nitride film until the upper surface of the silicon layer **3** is exposed. This forms the sidewall including the silicon oxide film **56** and the silicon nitride film **57** outside the silicon oxide film **55**, and the sidewall including the silicon oxide film **66** and the silicon nitride film **67** outside the silicon oxide film **65**. These sidewalls function as an implant mask for the formation of the source/drain regions **60**, **70** in a later step.

[**0173**] Subsequently, an impurity such as As, P and Sb (for the formation of an NMOS transistor) is introduced into the silicon layer **3** by an ion implantation process to form the source/drain regions **60**, **70**. The above-mentioned steps provide the structure shown in **FIG. 29**.

[**0174**] In the method of manufacturing the semiconductor device according to the sixth preferred embodiment, as stated above, the silicon oxide film **54** is used as the offset insulation film in the digital circuit region when the ion implantation is performed for the formation of the extensions **59**. In the analog circuit region, on the other hand, the silicon oxide films **64** and **65** are used as the offset insulation films when the ion implantation is performed for the formation of the extensions **69**. As a result, in the semiconductor device according to the sixth preferred embodiment, the amount (or dimension K1) of overlap between the gate electrode **53** and the extensions **59** as viewed in plan is greater than the amount (or dimension K2) of overlap between the gate electrode **63** and the extensions **69** as viewed in plan. This ensures the optimum value for the width of the offset insulation film for the transistor constituting the analog circuit (or radio-frequency circuit), while reducing the effective channel length to shorten the delay time t_{pd}, thereby improving the performance for the transistor constituting the digital circuit.

[**0175**] Although the reduction in effective channel length makes the short channel effect prone to occur in the transistor constituting the digital circuit, the influence of the short channel effect is less problematic in the digital circuit than in the analog circuit.

[**0176**] The sixth preferred embodiment has been described above taking the formation of the NMOS transistor as an example. The technique of the sixth preferred embodiment, however, is applicable to the formation of PMOS and CMOS transistors. This is also true for a seventh preferred embodiment according to the present invention to be described below.

[**0177**] Seventh Preferred Embodiment

[**0178**] It will be found from Expression (2) that the increase in maximum oscillation frequency f_{max} can be achieved by reducing the gate resistance R_g. A gate structure capable of reducing the gate resistance will be described in the seventh preferred embodiment of the present invention. The gate structure according to the seventh preferred embodiment is applicable to the semiconductor device of any one of the first to sixth preferred embodiments.

[**0179**] **FIG. 36** is a top plan view schematically showing a structure of a semiconductor device according to the seventh preferred embodiment of the present invention. A pair of source/drain regions **76** are formed on opposite sides of a gate electrode **75**. A plurality of contact plugs **77** are formed in contact with the source/drain regions **76**.

[**0180**] **FIG. 37** is a sectional view showing the structure taken along the line A1-A1 of **FIG. 36**. **FIG. 38** is a sectional view showing the structure taken along the line A2-A2 of **FIG. 36**. With reference to **FIG. 37, a** polysilicon film **79** is formed on the upper surface of the silicon layer **3**, with a gate oxide film **78** of silicon oxide therebetween. A metal silicide layer **80** is formed on the polysilicon film **79**, and the polysilicon film **79** and the metal silicide layer **80** constitute the gate electrode **75**. A sidewall **83** including a silicon oxide film **81** and a silicon nitride film **82** is formed on each side surface of the gate electrode **75**. A sidewall **86** including a silicon oxide film **84** and a silicon nitride film **85** is formed on an opposite side surface of the sidewall **83** from the gate electrode **75**.

[**0181**] A body region **88** is formed in the silicon layer **3** under the gate electrode **75**. The pair of source/drain regions **76** are formed in the silicon layer **3**, with the body region **88** disposed therebetween. The pair of source/drain regions **76** have a pair of extensions **87**, respectively, which are formed in the upper surface of the silicon layer **3** and extend to under the gate electrode **75**. A metal silicide layer **89** is formed on the upper surface of the source/drain regions **76** except where the sidewalls **83** and **86** are formed.

[**0182**] An interlayer insulation film **90** made of silicon oxide is formed on the silicon layer **3** to cover the MOSFET. The contact plugs **77** made of metal are formed through the interlayer insulation film **90** to reach from the upper surface of the interlayer insulation film **90** to the upper surface of the metal silicide layer **89**. A metal interconnect line **91** made of metal such as aluminum and copper is formed on the upper surface of the interlayer insulation film **90** and is in contact with the contact plugs **77**. A gate interconnect line **92** made of metal is formed through the interlayer insulation film **90** to reach from the upper surface of the interlayer insulation film **90** to the upper surfaces of the metal silicide layer **80** and the sidewall **83**. A dimension of the gate interconnect

line **92** in the direction of the gate length is greater than the gate length of the gate electrode **75**.

[**0183**] With reference to **FIG. 38**, the gate interconnect line **92** is in contact with the upper surface of the gate electrode **75** and extends in the same direction as the gate electrode **75** extends.

[**0184**] **FIGS. 39 through 43** are sectional views showing a method of manufacturing the semiconductor device in a step-by-step manner according to the seventh preferred embodiment. Referring first to **FIG. 39**, the SOI substrate **4** is prepared, and then the isolating insulation film **30** is formed in the silicon layer **3**. Next, the gate oxide film **78** and the polysilicon film **79** are formed on the upper surface of the silicon layer **3** by the process described in the above-mentioned preferred embodiments. Then, an impurity such as As, P and Sb (for the formation of an NMOS transistor) is introduced into the upper surface of the silicon layer **3** by an ion implantation process to form the extensions **87**. Before the ion implantation process, the concepts of the first to sixth preferred embodiments may be applied to form the offset insulation film on the side surface of the polysilicon film **79**, thereby increasing the effective channel length.

[**0185**] With reference to **FIG. 40, a** silicon oxide film and a silicon nitride film are formed in the order named on the entire top surface of the resultant structure by a CVD process. Next, an anisotropic dry etching process which exhibits a higher etch rate in the direction of depth of the SOI substrate **4** is performed to etch the silicon oxide film and the silicon nitride film until the upper surface of the silicon layer **3** is exposed. This leaves the silicon oxide film **81** and the silicon nitride film **82** unetched on each side surface of the polysilicon film **79** to form the sidewall **83**. Next, an impurity such as As, P and Sb (for the formation of an NMOS transistor) is introduced into the silicon layer **3** by an ion implantation process to form the source/drain regions **76**. The sidewall **83** functions as an implant mask in the ion implantation step for the formation of the source/drain regions **76**.

[**0186**] With reference to **FIG. 41, a** silicon oxide film and a silicon nitride film are formed in the order named on the entire top surface of the resultant structure by a CVD process. Next, an anisotropic dry etching process which exhibits a higher etch rate in the direction of depth of the SOI substrate **4** is performed to etch the silicon oxide film and the silicon nitride film until the upper surface of the silicon layer **3** is exposed. This leaves the silicon oxide film **84** and the silicon nitride film **85** unetched on a side surface of each sidewall **83** to form the sidewall **86**. In this process, the thickness of the silicon nitride film and the etch conditions may be adjusted so that the sidewall **86** differs from the sidewall **83** in dimension in the direction of the gate length.

[**0187**] Referring to **FIG. 42, a** metal film such as cobalt is formed on the entire top surface of the resultant structure, and is then heated. This causes silicon and metal to react with each other in their contacting portions to form the metal silicide layers **80** and **89**. The metal silicide layer **80** is formed on the polysilicon film **79**, thereby to constitute the gate electrode **75**. The metal silicide layer **89** is formed on the source/drain regions **76**. Thereafter, the unreacted metal film is removed.

[**0188**] With reference to **FIG. 43, a** silicon oxide film is deposited on the entire top surface of the resultant structure by a CVD process to form the interlayer insulation film **90**. Next, a photoresist (not shown) having a predetermined opening pattern is formed on the upper surface of the interlayer insulation film **90** by a photolithographic process. Using the photoresist as an etch mask, an anisotropic dry etching process which exhibits a higher etch rate in the direction of depth of the SOI substrate **4** is performed to remove the interlayer insulation film **90**. Performing this etching process under conditions such that the silicon oxide film is more susceptible to etching and the silicon nitride film is less susceptible to etching prevents the upper surface of the sidewall **83** from being etched. This forms contact holes **93** on the metal silicide layer **89**, and an interconnect trench or opening **94** on the gate electrode **75**.

[**0189**] It is desirable to shape the opening pattern of the photoresist so that a dimension **M1** of the contact holes **93** in the direction of the gate length is greater than a dimension **M2** of the interconnect trench **94** in the direction of the gate length for reasons to be described below. The opening area of each contact hole **93** is less than the opening area of the interconnect trench **94** because the interconnect trench **94** extends along the gate electrode **75**. Thus, the contact holes **93** are etched more slowly than the interconnect trench **94**. Making the dimension **M1** greater than the dimension **M2** reduces the etch rate difference.

[**0190**] Next, a metal film (Al, W, Cu or the like) thick enough to fill the contact holes **93** and the interconnect trench **94** is formed on the entire top surface of the resultant structure, and is then etched back until the upper surface of the interlayer insulation film **90** is exposed. To improve the adhesion of the metal film, a barrier metal layer may be formed before the metal film is deposited. The material of the barrier metal layer is titanium (Ti), titanium nitride (TiN), a composite film of Ti and TiN, or the like. Thereafter, the metal interconnect line **91** is formed to provide the structure shown in **FIG. 37**.

[**0191**] As stated above, in the semiconductor device according to the seventh preferred embodiment, the gate interconnect line **92** formed through the interlayer insulation film **90** is in contact with the upper surface of the gate electrode **75**, and extends in the same direction as the gate electrode **75** extends, the dimension of the gate interconnect line **92** in the direction of the gate length being greater than the gate length of the gate electrode **75**. This reduces the gate resistance R_g in Equation (2) to increase the maximum oscillation frequency f_{max}.

[**0192**] In the method of manufacturing the semiconductor device according to the seventh preferred embodiment, the sidewall **86** is formed outside each sidewall **83**. This avoids contact between the gate interconnect line **92** and the metal silicide layer **89** if the interconnect trench **94** is not formed in its proper position because of the misalignment of the photomask and the like. Thus, the formation of the sidewall **86** improves a misalignment margin. The greater the dimension of the sidewall **86** in the direction of the gate length is, the greater this effect is.

[**0193**] However, the excessively great dimension of the sidewall **86** in the direction of the gate length reduces the dimension of the metal silicide layer **89** in the direction of the gate length to increase the series resistance of the source/drain. It is therefore necessary to weigh the advantage of being able to improve the misalignment margin

against the drawback of increasing the series resistance of the source/drain to optimize the dimension of the sidewall **86** in the direction of the gate length.

[**0194**] The effect of improving the misalignment margin is produced by simply increasing the width of the sidewall **83** without individually forming the sidewall **83** and the sidewall **86**. This technique, however, increases the distance between the pair of source/drain regions **76** and accordingly increases the length of the extensions **87** to increase the series resistance in the extensions **87**, resulting in the reduction in current driving capability. On the other hand, the process for forming the source/drain regions **76** after the formation of the sidewall **83**, and then forming the sidewall **86** as in the method of the seventh preferred embodiment can reduce the length of the extensions **87** to prevent the reduction in current driving capability.

[**0195**] While the invention has been described in detail, the foregoing description is in all aspects illustrative and not restrictive. It is understood that numerous other modifications and variations can be devised without departing from the scope of the invention.

What is claimed is:

1. A semiconductor device comprising:

an SOI substrate having a multi-layer structure including a semiconductor substrate, an insulation layer and a semiconductor layer stacked in the order named;

a first insulation film formed on a main surface of said semiconductor layer;

a gate electrode formed on said first insulation film;

a pair of second insulation films having respective inner side surfaces in contact with side surfaces of said gate electrode and respective outer side surfaces out of contact with said side surfaces of said gate electrode, with said gate electrode disposed between said pair of second insulation films;

a pair of third insulation films formed on said main surface of said semiconductor layer, with said first insulation film therebetween, and having respective inner side surfaces in contact with said outer side surfaces of said second insulation films and respective outer side surfaces out of contact with said outer side surfaces of said second insulation films, with said gate electrode and said second insulation films disposed between said pair of third insulation films;

a body region formed in said semiconductor layer under said gate electrode; and

a pair of source/drain regions formed in said semiconductor layer, with said body region disposed between said pair of source/drain regions,

said source/drain regions having respective extensions extending from under said outer side surfaces of said second insulation films toward said body region in said main surface of said semiconductor layer,

wherein the width of said second insulation films in a direction of gate length is greater than the thickness of a portion of said first insulation film underlying said third insulation films.

2. The semiconductor device according to claim 1, wherein

said width of said second insulation films is in the range of 2/7 to 1 times said gate length.

3. The semiconductor device according to claim 1, wherein

a lifetime killer is formed in said main surface of said semiconductor layer.

4. The semiconductor device according to claim 3, wherein

a portion of said main surface of said semiconductor layer on which said third insulation films are formed is sunk toward said insulation layer below a portion of said main surface of said semiconductor layer on which said second insulation films are formed.

5. The semiconductor device according to claim 3, wherein

a portion of said main surface of said semiconductor layer positioned outside said outer side surfaces of said third insulation films is sunk toward said insulation layer below a portion of said main surface of said semiconductor layer on which said third insulation films are formed.

6. The semiconductor device according to claim 3, further comprising

a metal-semiconductor compound layer formed on said source/drain regions.

7. The semiconductor device according to claim 3, wherein

said third insulation films are made of silicon nitride; and

said third insulation films are formed directly on said main surface of said semiconductor layer without said first insulation film therebetween.

8. The semiconductor device according to claim 1,

said semiconductor device being a MOSFET, wherein

said MOSFET includes an NMOSFET and a PMOSFET both formed in said semiconductor layer; and

said width of said second insulation films included in said NMOSFET is greater than said width of said second insulation films included in said PMOSFET.

9. The semiconductor device according to claim 1,

said semiconductor device being a MOSFET, wherein

said MOSFET includes an NMOSFET and a PMOSFET both formed in said semiconductor layer; and

said width of said second insulation films included in said PMOSFET is greater than said width of said second insulation films included in said NMOSFET.

10. A semiconductor device comprising:

a substrate having a first region with a digital circuit formed therein, and a second region with an analog or RF (radio frequency) circuit formed therein;

a first semiconductor element formed in said first region and constituting said digital circuit; and

a second semiconductor element formed in said second region and constituting said analog or RF circuit,

said first semiconductor element including

a first gate electrode formed on a main surface of said substrate, with a first gate insulation film therebetween,

a first body region formed in said substrate under said first gate electrode, and

a pair of first source/drain regions formed in said substrate, with said first body region disposed between said pair of first source/drain regions,

said second semiconductor element including

a second gate electrode formed on said main surface of said substrate, with a second gate insulation film therebetween,

a second body region formed in said substrate under said second gate electrode, and

a pair of second source/drain regions formed in said substrate, with said second body region disposed between said pair of second source/drain regions,

said pair of first source/drain regions having a pair of first extensions, respectively, extending toward under said first gate electrode in said main surface of said semiconductor layer,

said pair of second source/drain regions having a pair of second extensions, respectively, extending toward under said second gate electrode in said main surface of said semiconductor layer,

wherein the amount of overlap between said first gate electrode and said first extensions as viewed in plan is greater than the amount of overlap between said second gate electrode and said second extensions as viewed in plan.

11. The semiconductor device according to claim 10, wherein

said first semiconductor element further includes a first sidewall formed on a side surface of said first gate electrode; and

said second semiconductor element further includes

a first insulation film formed on a side surface of said second gate electrode, and

a second sidewall formed on said side surface of said second gate electrode, with said first insulation film therebetween.

12. The semiconductor device according to claim 11, wherein

said first semiconductor element further includes a second insulation film formed between said first gate electrode and said first sidewall, said second insulation film being in contact with said side surface of said first gate electrode; and

said first insulation film includes

a third insulation film formed in contact with said side surface of said second gate electrode, said third insulation film being equal in thickness to said second insulation film, and

a fourth insulation film formed between said third insulation film and said second sidewall.

13. A semiconductor device comprising:

a substrate;

a semiconductor element including (a) a gate electrode formed on a main surface of said substrate, with a gate insulation film therebetween, and extending in a predetermined direction, (b) a first sidewall formed on a side surface of said gate electrode, (c) a body region formed in said substrate under said gate electrode, and (d) a pair of source/drain regions formed in said substrate, with said body region disposed between said pair of source/drain regions;

an interlayer insulation film formed on said substrate to cover said semiconductor element; and

a gate interconnect line in contact with an upper surface of said gate electrode and extending in said predetermined direction, said gate interconnect line being formed in said interlayer insulation film, wherein a dimension of said gate interconnect line in a direction of gate length of said gate electrode is greater than said gate length of said gate electrode.

14. The semiconductor device according to claim 13, further comprising

a second sidewall formed on said side surface of said gate electrode, with said first sidewall therebetween.

15. The semiconductor device according to claim 14, wherein

a dimension of said second sidewall in said direction of said gate length is greater than a dimension of said first sidewall in said direction of said gate length.

16. The semiconductor device according to claim 13, further comprising

a contact plug connected to said source/drain regions and formed in said interlayer insulation film,

wherein said dimension of said gate interconnect line in said direction of said gate length is less than a dimension of said contact plug in said direction of said gate length.

* * * * *