US005704479A

United States Patent [19]

Barnett et al.

[11] **Patent Number: 5,704,479**

[45] **Date of Patent: Jan. 6, 1998**

[54] **WIRE STORING AND DISPENSING PACKAGE**

[75] Inventors: **David H. Barnett**, Fort Wayne; **David B. Camillo**, Lafayette, both of Ind.

[73] Assignee: **Essex Group, Inc.**, Fort Wayne, Ind.

[21] Appl. No.: **567,253**

[22] Filed: **Dec. 5, 1995**

[51] **Int. Cl.**[6] **B65D 83/00**; B65H 55/00

[52] **U.S. Cl.** **206/395**; 206/396; 206/409; 206/416; 242/171; 242/588.6

[58] **Field of Search** 206/389, 395–397, 206/403–405, 408–409, 413–416; 242/170, 171, 128, 129, 588.3, 588.6; 229/178

[56] **References Cited**

U.S. PATENT DOCUMENTS

1,691,995	11/1928	Saulter	206/395
3,680,810	8/1972	Jarmalow	206/395
3,693,784	9/1972	Holmes	206/409
4,019,636	4/1977	Wise	206/396
4,027,794	6/1977	Olson	206/395
4,151,914	5/1979	Blatt	206/395
4,951,813	8/1990	Sauter	229/178
4,978,086	12/1990	Spicer	242/588.3
5,277,360	1/1994	DeMott	229/178
5,522,561	6/1996	Koyamatsu et al.	206/409

Primary Examiner—Paul T. Sewell
Assistant Examiner—Luan K. Bui
Attorney, Agent, or Firm—Rader, Fishman and Grauer, PLLC

[57] **ABSTRACT**

An improved wire and cable packaging system for use with a spool wound with wire rotatable about a spiral-wrapped paper tube includes a container and a unitary insert, disposable in the container, both made of cardboard. The container includes a pair of retaining flaps and a pay-out slot for dispensing the wire. The insert is adapted to fit inside the container and is provided for receiving and supporting the tube when assembled. The insert includes a base with a pair of end walls extending vertically from opposing ends of the base. The end walls each having a support flap extending therefrom that is foldable about bend lines to a vertical position, adjacent the end walls, for improving support strength. The insert includes a pair of support flutes centrally formed about each bend line to define a cradle for receiving the tube. The retaining flaps of the container also have a flute for engaging the tube when the retaining flaps are moved from an open position to a closed position to thereby hold the tube and the insert in place.

3 Claims, 4 Drawing Sheets

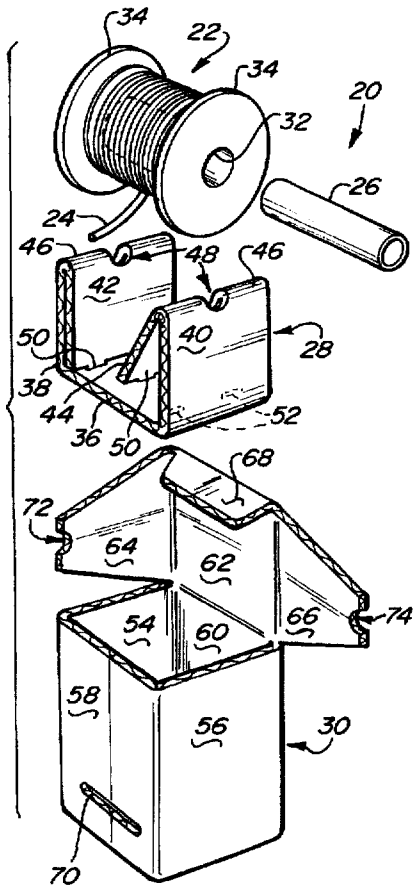

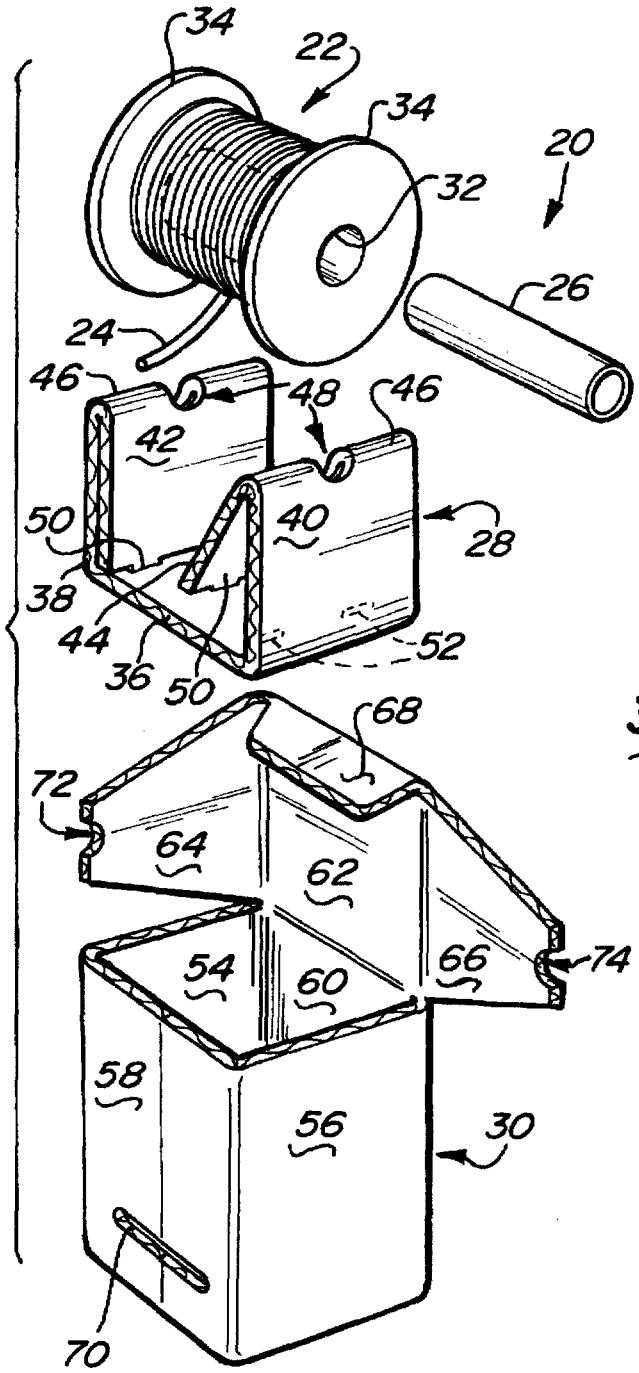
34
22
34
20
32
26
24
46
48
46
42
50
40
28
38
44
36
50
52
68
72
64
62
54
60
66
74
58
56
30
70

Fig-1

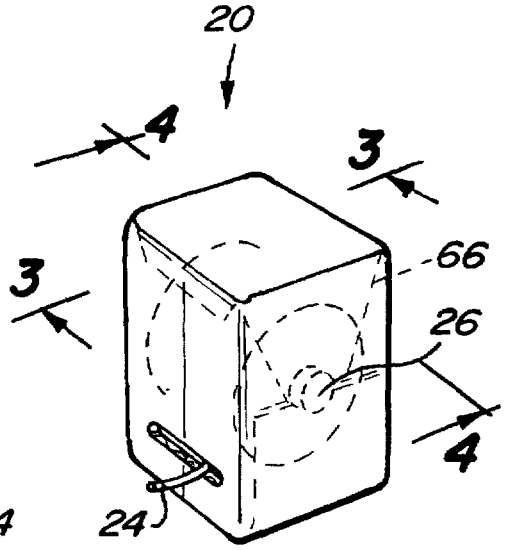
20
4
3
3
66
26
4
24

Fig-2

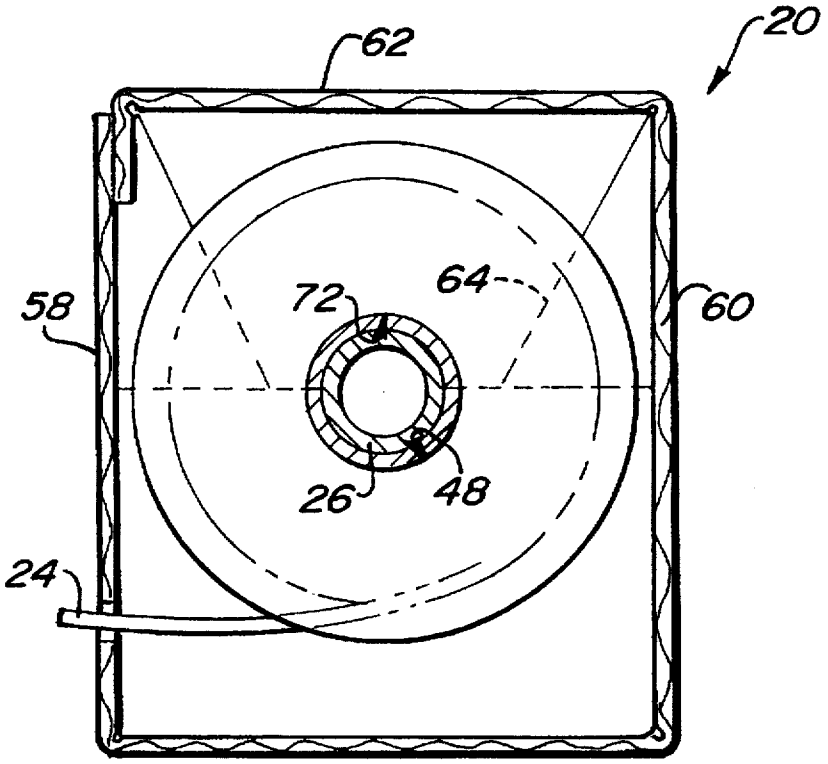

Fig-3

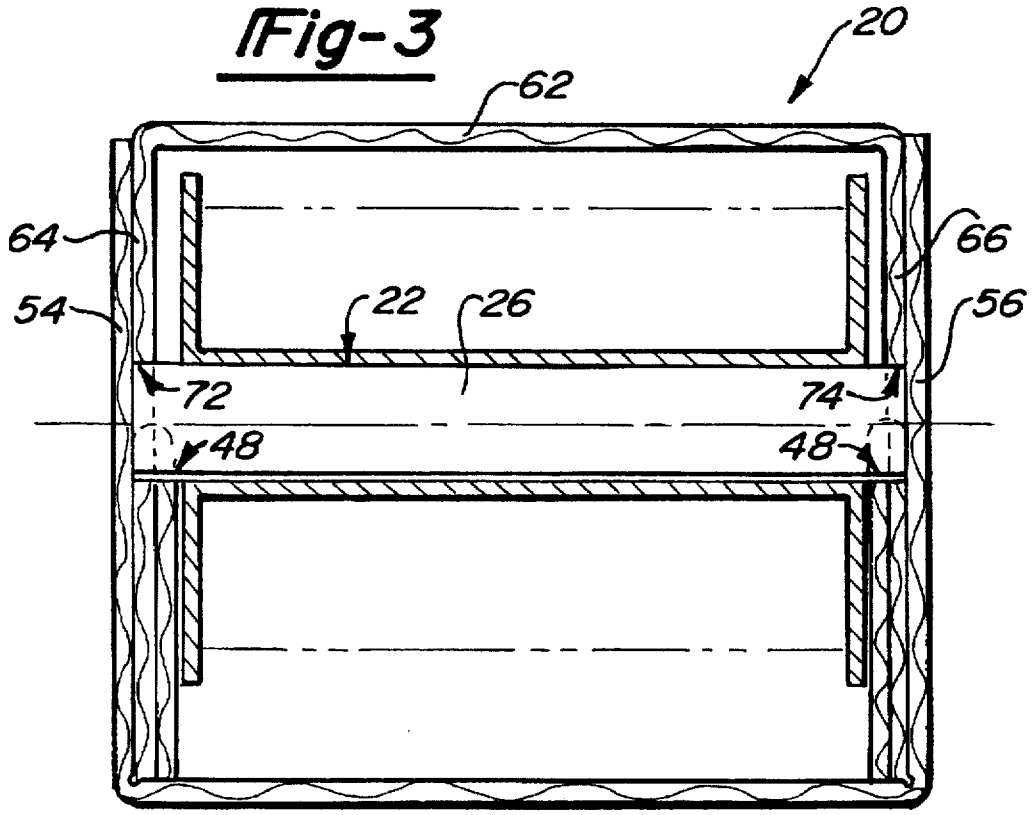

Fig-4

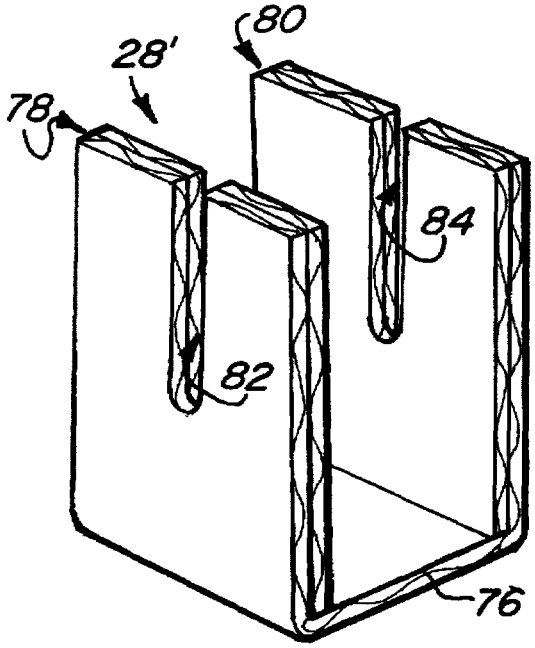

Fig-5

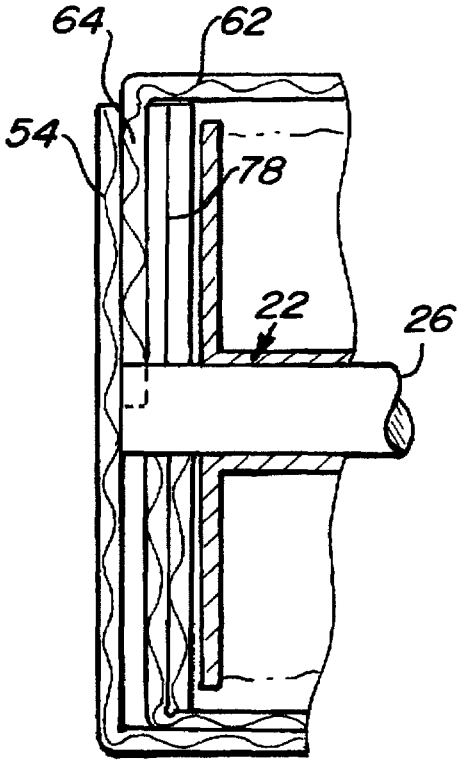

Fig-6

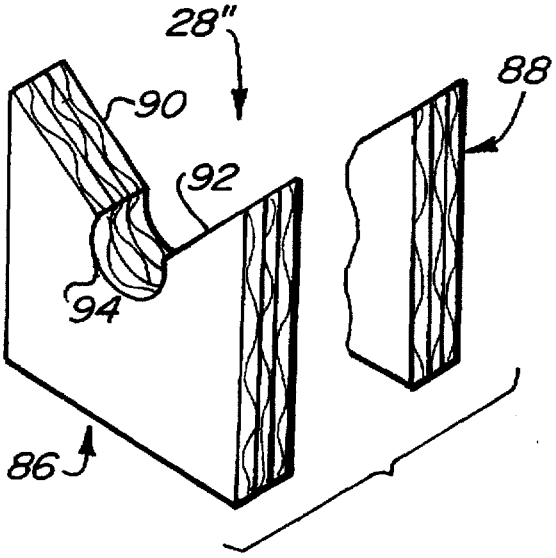

Fig-7

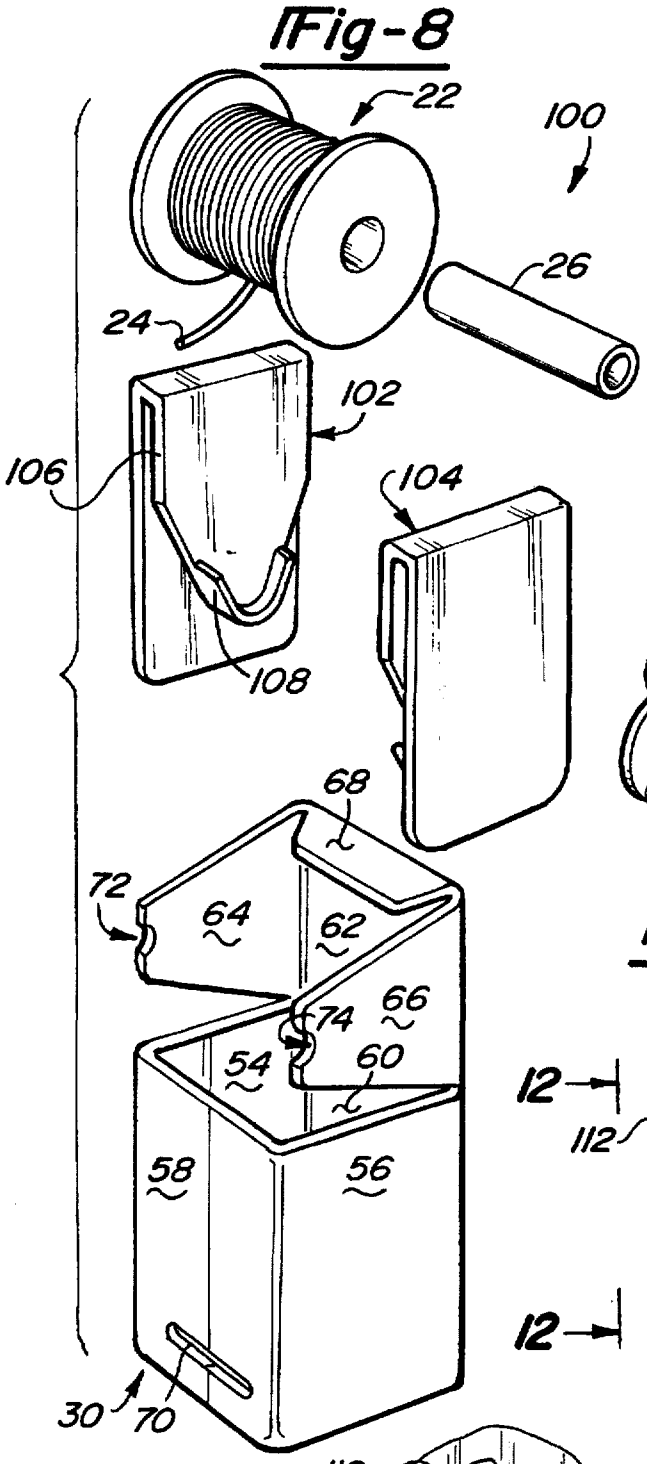

Fig-8

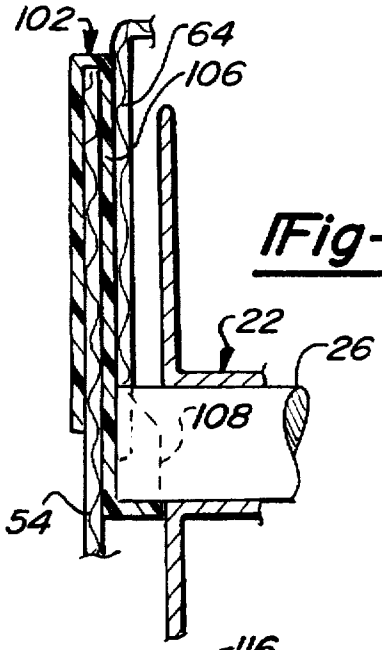

Fig-9

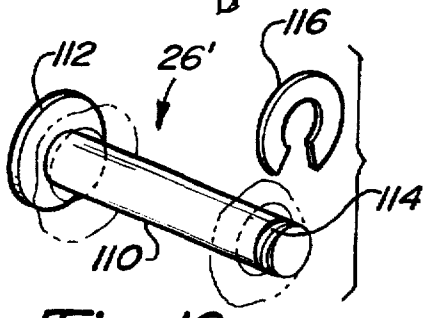

Fig-10

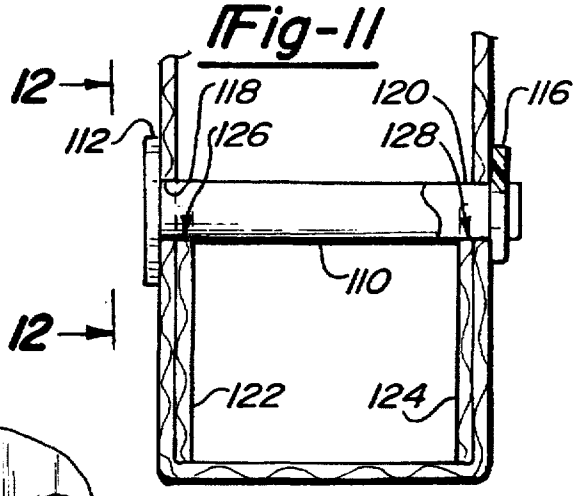

Fig-11

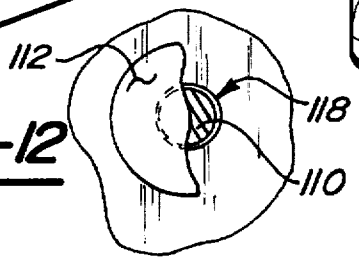

Fig-12

WIRE STORING AND DISPENSING PACKAGE

BACKGROUND OF THE INVENTION

1. Field of the Invention

This invention relates to an improved packaging system for storing, transporting, and dispensing wire or cable.

2. Related Art

Wire shipping and dispensing boxes are well-known. Particularly, wire and cable packaging designers have focused their efforts on providing a package that is easy to use by an installer of the wire. Thus, there has been much investigation in the art relating to techniques for solving this problem of easily dispensing the packaged wire or cable—the so-called payoff problem. Initially, the payoff problem solution was separate from the packaging. For example, for wire shipped on spools, the installer had to purchase or rent payoff equipment that allowed the spool to turn freely while the installer pulled wire through a conduit, or the like. The industry responded with the development of the so-called "knock-out" carton. The "knock-out" carton eliminated the need for separate payoff equipment, but had the undesirable tendency to allow the wire to twist during installation, causing a tangle which could not be pulled through the conduit. Others have improved upon the "knock-out" carton to eliminate the above-mentioned twisting problem; however, such designs introduced another problem—in those designs, the wire had a tendency to tangle inside the box during payoff.

An improvement over these early systems was the introduction of a so-called spool-in-a-box design. The general operation of these designs permit the spool to spin inside the box, thus negating the need for external payoff equipment. Such a package has the benefit of reducing the number of different packages stocked by a distributor or contractor. Further, the spool-in-a-box designs are flexible. The wire or cable contained therein may be paid out directly using the package itself, or, the spool may be removed from the package and placed in traditional racks or payoff equipment, if desired.

However, conventional spool-in-a-box designs are not without their drawbacks. In particular, conventional designs have employed a great variety of material in their construction, thus increasing costs, weight, and complicating recyclability. For example, one conventional design uses plastic inserts to support the spool for rotation, which are expensive, require special tooling and molding equipment, and are likely provided by a source other than the wire container supplier itself, thus requiring coordination among multiple vendors. Others in the art have further used a variety of wood, and hardboard in their designs. In addition to the foregoing deficiencies with respect to weight, cost, and recyclability, the conventional designs have also often been found lacking in performance.

Accordingly, an improved wire and cable storing and dispensing package is needed that minimizes or eliminates one or more of the problems as set forth above.

SUMMARY OF THE INVENTION

In accordance with the present invention, an improved wire and cable packaging system is provided that is suitable for use with a spool wound with wire rotatable about an axle. The system includes a container and a foldable support. The container is provided for mechanical protection and includes a pair of top retaining flaps and a payout slot in a lower

portion of a sidewall for dispensing the wire. The support is, in a preferred embodiment, disposed inside the container and is provided for receiving and supporting the axle upon which the spool will rotate. The retaining flaps of the container each have a flute or notch corresponding to the shape and size of the axle so that when the retaining flaps are moved from an open position to a closed position to close the container, the flaps engage the axle. This engagement holds the axle and the support firmly in place, thus providing a sturdy package for improved wire payoff.

In a preferred embodiment, the support takes the form of a unitary cardboard insert having a base with a pair of end walls extending vertically from opposing ends of the base. Each vertical end wall has a support flap extending therefrom that is foldable about bend lines to a vertical position, which is next to the vertical end wall, for improving support strength. The insert further includes a support flute or notch centrally formed about each bend line to define a cradle for receiving the axle. The container and the axle are also formed from paper or paper products to thereby enhance recyclability, reduce weight and increase cost effectiveness of the system.

These and other advantages, features and objects of the present invention will become apparent to one of ordinary skill in the art from the following detailed description and accompanying drawings illustrating features of the invention by way of example, but not by way of limitation.

BRIEF DESCRIPTION OF THE DRAWINGS

FIG. **1** is perspective exploded view of an embodiment in accordance with the present invention, partially assembled, which incorporates features of the invention.

FIG. **2** is a perspective view, fully assembled, of the embodiment shown in FIG. **1**.

FIG. **3** is a partial, cross-sectional view of the assembled embodiment shown in FIG. **2** taken substantially along lines **3—3**.

FIG. **4** is a partial, cross-sectional view of the assembled embodiment of FIG. **2** taken substantially along lines **4—4**.

FIG. **5** is a simplified, perspective view of an alternate insert embodiment for use with the system of FIG. **1**.

FIG. **6** is a partial, cross-sectional view of a fully assembled alternate embodiment incorporating the insert illustrated in FIG. **5**.

FIG. **7** is a perspective view of yet another alternate insert embodiment suitable for use with the system of FIG. **1**.

FIG. **8** is a perspective, exploded view of still another embodiment of the present invention, particularly illustrating hanger-type means for supporting the axle and spool.

FIG. **9** is a partial, cross-sectional view of the fully assembled embodiment shown in FIG. **8**.

FIG. **10** is a simplified, exploded perspective view of an alternate axle embodiment for use with still yet another alternate embodiment of the present invention.

FIG. **11** is a partial, cross-sectional view of a fully assembled embodiment incorporating the alternate axle embodiment shown in FIG. **10**.

FIG. **12** is a partial cut-away view of a flange portion of the alternate axle embodiment shown in FIG. **10**, as viewed substantially in the direction of the arrows indicated at **12—12** in FIG. **11**.

DETAILED DESCRIPTION OF THE PREFERRED ALTERNATE EMBODIMENTS

Referring now to the drawings wherein like reference numerals are used to identify identical components in the

various views, FIG. 1 illustrates an embodiment of the present invention—wire package system **20**. System **20** includes a spool **22** wound with wire **24**, an axle, such as a spiral-wrapped paper tube **26**, means, such as insert **28**, for receiving and supporting tube **26**, and a container **30** for providing mechanical protection for the spool and wire.

Spool **22** may be formed of easily-recyclable high impact polystyrene, and, in the preferred embodiment, is of a standard size: 10.5 F×6.5T×3.5 D. It should be appreciated, however, that the preferred embodiment may be easily adaptable to accommodate other sized spools. The spool includes a centrally-disposed through-bore **32** sized to accommodate tube **26**, and flanges **34** for retaining wound wire **24**. It should be understood that the term "wire" is being used in a generic sense, and is intended to encompass cable, and other types of wound material. Further, although the preferred embodiment uses a thin walled tube, any type of axle may be used, whether solid or hollow, and remain within the spirit and scope of the present invention.

Insert **28** is, in the preferred embodiment, unitary and may be formed using two-layer, triple-faced corrugated boxboard. Insert **28** includes a base portion **36**, a pair of end walls **38** and **40** extending vertically from opposing ends of base **36**, and a pair of support flaps **42** and **44** extending from vertical end walls **38** and **40**, respectively. Support flaps **42**, and **44** are foldable about bend lines **46** to a vertical position for improving the support strength of insert **28**. Support flap **42** is illustrated in the vertical position, while support flap **44** is illustrated in a partially-folded position. Insert **28** further includes a pair of support flutes or notches **48** centrally formed about each bend line **46** to define a cradle for receiving tube **26**. Notches **48** are made by forming a flute through the cardboard blank about the center of each bend line **46** so that when the insert is folded, the notches are formed thereby.

Support flaps **42**, and **44** each include a pair of tabs **50** extending from a free end thereof. In addition, base **36** includes a corresponding pair of recesses **52** for each set of tabs such that when support flaps **42** and **44** are folded to the vertical position, the tabs **50** are received in recesses **52** for holding the support flaps in the vertical position.

Container **30** is preferably formed from a unitary blank of boxboard of an appropriate crush-resistance (e.g. 275 lb. burst rating), and includes opposing sidewalls **54**, and **56**, opposing sidewalls **58**, and **60**, a top panel **62**, a pair of trapezoidal-shaped retaining flaps **64**, and **66**, and a locking flap **68**. Although omitted for clarity, sidewall **58** includes a locking tab extending from a top edge thereof, and locking flap **68** includes a corresponding locking slot formed adjacent the locking flap **68**/top panel **62** bend line so that when the container is closed, the tab/slot combination performs its conventional function to secure the top closed. Each of the sidewalls **54**, **56**, **58** and **60** include a bottom flap extending therefrom (not shown) which may be folded to form the bottom of container **30** in a manner well-known and conventional in the art. Container **30** may also have one or more elongated slot-shaped handle openings formed therein for the installer's convenience. Sidewall **58** also includes a payout slot **70** for dispensing wire **24**.

Retaining flaps **64** and **66** have retaining flutes or notches **72**, and **74**, respectively, formed on a free end thereof. The notches **72**, and **74** are sized and shaped to correspond to the size and shape of tube **26**, and are provided for engaging tube **26** when retaining flap **64** and **66** are moved from an open position (as shown in FIG. 1) to the closed position (as shown in FIG. 2, and as best shown in FIG. 3) to thereby hold tube **26** and insert **28** in place.

FIG. 2 shows a fully assembled system **20**. To assemble the system, insert **28**, and container SO are first folded from their preformed unitary blanks, as described above. Insert **28** is then positioned in container **30**. Spool **22**, wound with, for example, wire **24**, is then placed over tube **25**, and disposed in container **30**, wherein tube **26** is received, seated and held in the cradle formed by support notches **48**. An end of wire **24** is fed out of payout slot **70**, and retaining flap **64**, and **66** are folded to the position illustrated by flap **64**, and are next moved to the closed position; the trapezoidal-shape of the flaps facilitating movement of retaining flaps **64** and **66** from the open to the closed position.

Referring now to FIG. 3, when closed, retaining flap **66** engages tube **26**, thereby also holding insert **28** in place. This arrangement provides for a sturdy packaging system.

FIG. 4 is a cross-sectional view taken substantially along lines 4—4 in FIG. 2, showing how tube **26** is received in notches **48**, and is engaged by retaining notches **72** and **74**.

Since system **20** includes a container **30**, insert **28**, and tube **26** that are all made of paper/paper products, the system provides improved recyclability, reduced weight (important to shipping costs), and lower cost than the conventional spool-in-a-box designs.

Referring now to FIG. 5, a preferred insert embodiment **28'** includes a base portion **76** with a pair of end members **78** and **80** extending vertically from opposing ends of base **76**. Insert **28'** further includes for each end member **18** and **80**, a respective elongated slot **82**, and **84**, each slot being open at the top. A lowermost portion of each slot is radiused to a size and shape adapted to accommodate and seat tube **26**. It should be apparent that the width of slots **82** and **84** must be sufficient to permit tube **26** to pass vertically therethrough. The slots in end members **78** and **80** form a cradle for receiving tube **26**.

Referring now to FIG. 6, insert **28'** is of a height substantially equal to the height of container **30** (less the box wall thicknesses of top panel **62** and the bottom panel). In this embodiment, retaining flaps **64** and **66** still engage tube **62**, and therefore hold tube **62**, and insert **28'** in place; however, top panel **62**, due to the height of insert **28'**, substantially engages the top of insert **28'**. This feature provides for improved stackability. Insert **28'** may be unitary, and folded from a single cardboard blank.

Referring now to FIG. 7, a third embodiment of the means for receiving and supporting tube **26** is depicted as **28"**. Means **28"** includes a pair of bearing members **86** and **88**, each of which may be formed from multiple layers of cardboard (three layer, quadruple-faced cardboard as shown in FIG. 7). Bearing members **86** and **88** are identical; however, only member **86** is shown and will be described in detail for clarity. Member **86** includes a pair of opposing and inwardly tapering surfaces **90** and **92** which have a radius **94** formed on a lowermost portion to thereby define a slot opening upwards. The inwardly tapering surfaces **90**, and **92** are provided for guiding the tube **26** to a seated position in radius portion **94** when assembly of the packaging system occurs.

FIGS. 8 and 9 illustrate yet another embodiment of the present invention. Referring particularly now to FIG. 8, an improved wire packaging system **100** is illustrated, and which includes an spool **22** wound with wire **24**, a tube **26** and a container **30** identical to that illustrated and described above in connection with system **20**. The system **100**, however, includes means, such as inverted U-shaped hangers **102** and **104**, for receiving and supporting tube **26**. Each hanger **102** and **104** may be formed of plastic and adapted

for straddling opposing sidewalls **54**, and **56**, respectively, of container **30**. The position of hanger **102** when assembled to container **30** is shown in FIG. **9**.

As shown in FIG. **9**, a lowermost portion of an inwardly disposed side **106** of hanger **102** extends laterally to form a projection **108** for receiving and supporting tube **26**. Projection **108** is adapted in size, and shape to correspond to the selected size and shape of tube **26**.

FIGS. **10**, **11** and **12** show a fifth embodiment in accordance with the present invention. In this embodiment, the installer/end user will insert the axle of the system to obtain spool-in-a-box. In this embodiment, axle **26'**, as shown in FIG. **10**, is preferably employed, and may be made of plastic or fiber. The axle **26'** includes a shaft portion **110**, a flange portion **112**, and a reduced diameter portion **114**. A lock washer **116** is also provided for use with axle **26'**. Particularly, the reduced diameter portion **114** is adapted in size to cooperate with washer **116** so that washer **116** "snaps" on.

Referring now to FIG. **11**, in this fifth embodiment, container **30** is modified to include a pair of removable knock-outs, preferably perforated punch-outs **118** and **120**, formed in opposing sidewalls **54**, and **56** and sized to allow shaft portion **110** of axle **26** but not flange **112** to pass therethrough. Further, the bottom box flaps of container **30** are modified to obtain a pair of support flaps **122** and **124**, which are identical to those on the top of the box (i.e., retaining flaps **64** and **66**). Flaps **122**, and **124** thus include corresponding notches **126** and **128** to receive and support axle **26'**. When a container in this embodiment is assembled (i.e., folded for use), the notches **126**, and **128** are in substantial registry with the voids remaining after removal of the perforated punch-outs **118**, and **120**. The installer/end user would then lift the spool off the bottom of the box, insert axle **26'** through punch-outs **118** and **120**, and finally place lock washer **116** over reduced diameter portion **114**, thus retaining axle **26'** in place. In this embodiment, four thicknesses of boxboard support the weight of the spool and wire.

FIG. **12** shows the enlarged flange portion **112**, in a partial cut-away view, as seen in the direction of arrows **12—12** in FIG. **11**.

The preceding description is exemplary rather than limiting in nature. A preferred embodiment of this invention has been disclosed to enable one skilled in the art to practice this invention. Variations and modifications are possible without departing from the purview and spirit of this invention; the scope of which is limited only by the appended claims.

What is claimed is:

1. A self-contained wound material storage and payout device, comprising:

a spool;

an axle upon which said spool rotates;

a container having a pair of retaining flaps and a payout slot for dispensing wound material from said spool;

a unitary insert having a base portion with a pair of end walls extending vertically from opposing ends of said base, said vertical end walls each having a support flap extending therefrom that is foldable about a respective bend line to a vertical position for improving support strength, wherein each of said support flaps includes a tab extending from a free end thereof, said base portion including a pair of recesses disposed therein such that when said support flaps are folded to said vertical position, said tabs are received in said recesses for holding said support flaps in said vertical position, said insert further including a support notch formed about each bend line to define a cradle for supporting said tube; and

said retaining flaps each having a retaining means formed on a free end thereof for engaging said axle when said retaining flaps are moved from an open position to a closed position to thereby hold said axle and said insert in said container.

2. The device of claim **1**, wherein said retaining flaps have a generally trapezoidal shape to facilitate moving from said open position to said closed position.

3. The device of claim **1**, wherein said container and said unitary insert are made from paper products.

* * * * *