US007204452B2

(12) **United States Patent**
Wilkinson et al.

(10) **Patent No.: US 7,204,452 B2**
(45) **Date of Patent: Apr. 17, 2007**

(54) **DISPENSER FOR ELONGATE MATERIAL**

(75) Inventors: **James Wilkinson**, East Greenbush, NY (US); **Fedor Baranov**, East Greenbush, NY (US)

(73) Assignee: **Sonoco Development, Inc.**, Hartsville, SC (US)

(*) Notice: Subject to any disclaimer, the term of this patent is extended or adjusted under 35 U.S.C. 154(b) by 0 days.

(21) Appl. No.: **11/146,602**

(22) Filed: **Jun. 7, 2005**

(65) **Prior Publication Data**

US 2006/0273217 A1 Dec. 7, 2006

(51) **Int. Cl.**
B65H 75/12 (2006.01)

(52) **U.S. Cl.** **242/614**; 242/396.6; 242/611.1

(58) **Field of Classification Search** 242/614, 242/614.1, 608, 611, 611.1, 601, 396.6, 396.7, 242/396.8, 588, 588.3, 588.6, 422.4, 598.5, 242/598.6, 397, 398, 566, 615, 128, 129, 242/597.3

See application file for complete search history.

(56) **References Cited**

U.S. PATENT DOCUMENTS

573,563	A	12/1896	Yeakel	
1,474,580	A	11/1923	Clark et al.	
1,783,339	A *	12/1930	Mitchell	242/128
2,647,704	A *	8/1953	Samler et al.	242/128
3,122,113	A *	2/1964	Edwards	242/128
3,693,784	A	9/1972	Holmes	
3,791,119	A *	2/1974	Godderidge	242/128
3,972,489	A *	8/1976	Kovaleski	242/128
4,111,089	A	9/1978	Montaruli	
4,142,694	A	3/1979	Rankin, Jr.	
4,253,570	A	3/1981	O'Connor et al.	206/391
4,582,198	A	4/1986	Ditton	206/395
4,771,889	A *	9/1988	Bauer et al.	242/588.3
4,903,833	A	2/1990	Beery	
5,165,543	A	11/1992	Heyda et al.	206/400
5,474,254	A	12/1995	Faulkner	242/614
5,529,186	A	6/1996	Bass	206/395
5,897,075	A *	4/1999	Elder et al.	242/614
5,967,451	A	10/1999	Radaios	
6,003,667	A	12/1999	Barnett et al.	206/396
6,145,780	A	11/2000	Fontana	242/588.1
2002/0125161	A1	9/2002	Cote	206/408
2003/0080011	A1	5/2003	You et al.	206/397
2003/0098253	A1	5/2003	You et al.	206/408

FOREIGN PATENT DOCUMENTS

EP	0 826 618 A1	3/1998

* cited by examiner

Primary Examiner—William A. Rivera
(74) *Attorney, Agent, or Firm*—DLA Piper US LLP

(57) **ABSTRACT**

A dispenser for an elongate material is provided having a support and a spool rotatably mounted in the support. The spool includes a core and two ends extending radially outward from the core. At least one ring on the support encircles a respective end of the spool. In one embodiment, the radial outside of each ring is provided with a formation tapering towards the middle of the spool.

35 Claims, 3 Drawing Sheets

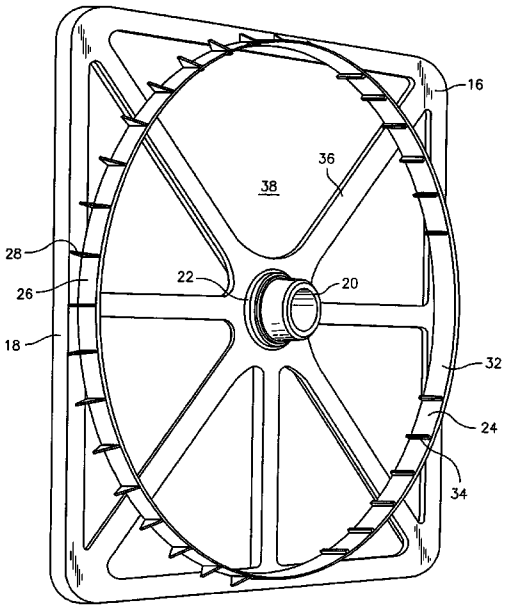

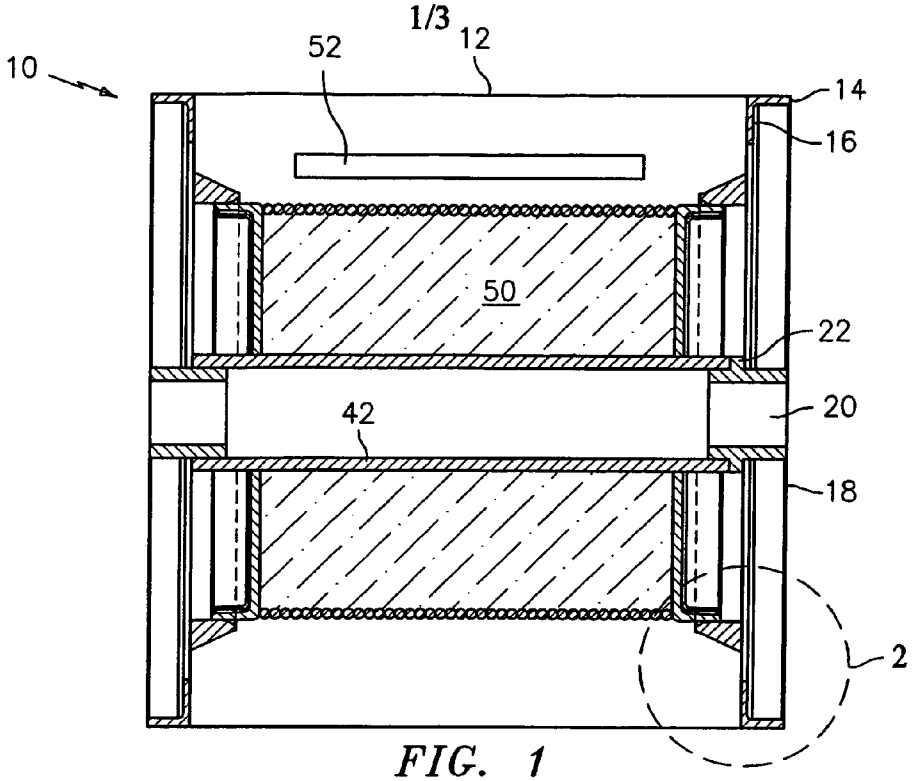

FIG. 1

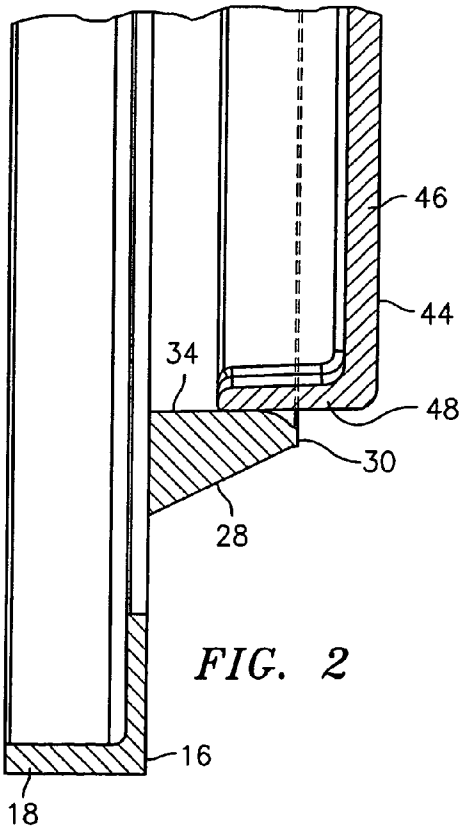

FIG. 2

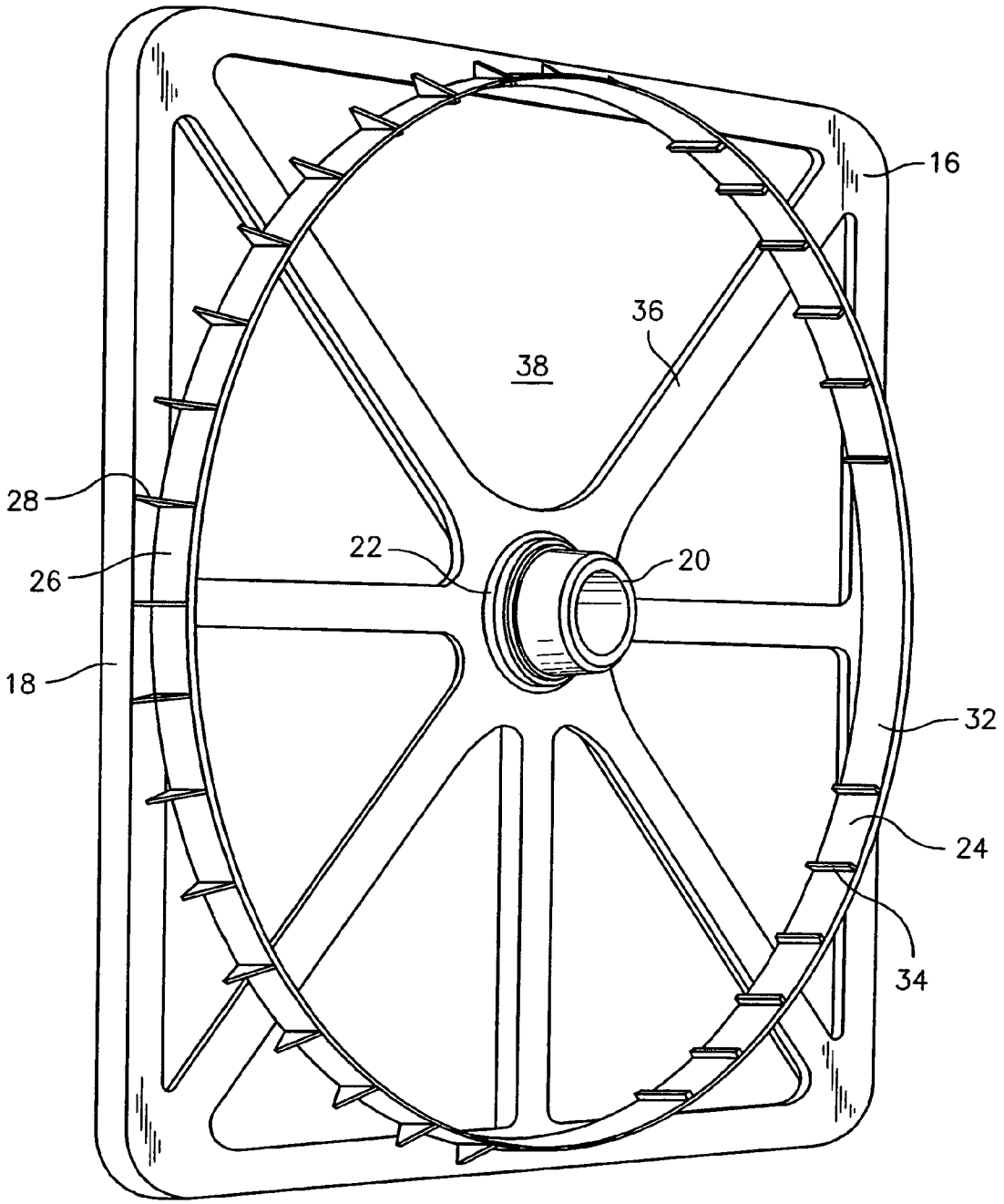

FIG. 3

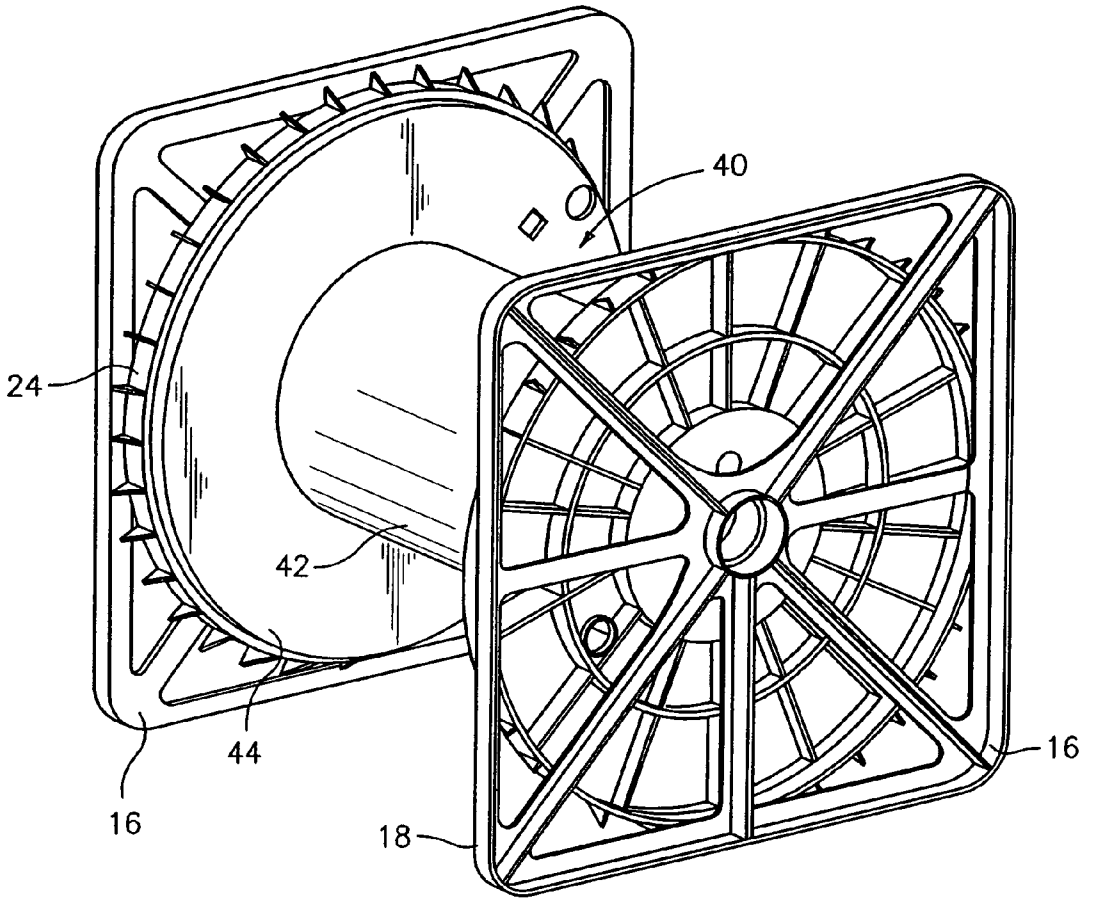

FIG. 4

DISPENSER FOR ELONGATE MATERIAL

FIELD OF INVENTION

The present invention relates to a device for holding and/or dispensing elongate materials, such as wire, from a spool or the like.

BACKGROUND OF INVENTION

Various devices are known for holding and dispensing cable and other elongate material. Some of these devices comprise a container with a spool mounted inside the container. The cable or other elongate material is wound on the spool. When material is to be dispensed from the spool, the spool is intended to rotate while the outer container remains stationary. With some previously proposed dispensers, the user draws off material from the spool by pulling on a free end of the material. When the user stops pulling, the spool may continue to rotate because of the angular momentum of the rotating spool of material, especially when the material is heavy, such as metal wire or fiber optic cable. This can result in the outer turns of wire on the spool becoming slack, and becoming trapped between the spool and the container and/or wrapped round supports for the spool inside the container, so that the material jams next time the user attempts to draw some off.

SUMMARY OF INVENTION

One embodiment of the present invention provides a dispenser for elongate material, comprising a support, a spool rotatably mounted in the support, the spool having a core and two ends extending radially outward from the core, and at least one ring on the support, encircling a respective end of the core, the radial outside of the at least one ring being provided with a formation tapering towards the middle of the spool.

Another embodiment of the present invention provides a dispenser for elongate material, comprising a holder, a spool rotatably mounted in the holder, the spool having a core and two ends extending radially outward from the core, at least one ring on the holder, encircling a respective end of the core, and a plurality of friction ribs extending between the at least one said ring and the respective end of the core.

Another embodiment of the present invention provides an end plate for a dispenser for elongate material, comprising a central support to rotatably mount an end of a spool on one side of the end plate, a ring having a generally cylindrical inside surface concentric with the support, a plurality of guide ribs on the outside of the ring tapering towards said one side of the end plate, and a plurality of flexible friction ribs extending axially from the inside of said ring.

BRIEF DESCRIPTION OF THE DRAWINGS

For the purpose of illustrating the invention, there are shown in the drawings various forms which are presently disclosed; it being understood, however, that this invention is not limited to the precise arrangements and instrumentalities particularly shown.

FIG. **1** is an axial section through an embodiment of a dispenser as contemplated by the invention.

FIG. **2** is an enlarged view of the detail **2** of FIG. **1**, an outer box being omitted for clarity.

FIG. **3** is a perspective view of an end frame forming part of the dispenser shown in FIG. **1**.

FIG. **4** is a perspective view of a spool and two end frames forming part of the dispenser as shown in FIG. **2**.

DETAILED DESCRIPTION OF THE DRAWINGS

In the drawings, where like elements are identified by like numerals, there is shown an embodiment of a container for storing and dispensing elongate material, for example, electrical or fiber optic cable. One form of container, identified generally by the numeral **10**, comprises a box **12**. The box **12** may be made of any suitable reasonably rigid material. The box **12** has a body with two ends **14**. As shown in the drawings, the ends of the box **14** are square.

Inside each end **14** of the box **12** is an end plate **16**, best seen in FIG. **3**. Each end plate **16** has an outer frame **18** that is dimensioned to fit snugly within the end **14** of the box **12**. In the center of the end plate **16** is a cylindrical or frustoconical arbor **20** extending towards the center of the box **12**. The arbor **20** is surrounded by a shoulder **22**.

The end plate **16** also bears a ring wall **24** which, as best seen in FIG. **3**, is slightly smaller in diameter than the width between opposite sides of the outer frame **18**. The ring wall **24** is concentric with the arbor **20** and extends axially from the outer frame **18** towards the middle of the box **12**. The ring wall **24** has on its outer face **26** a number of triangular ribs **28** that are widest where they meet the outer frame **18**, and taper to meet the ring wall **24** close to the edge **30** of the wall nearest the middle of the box. The outer edges of the triangular ribs **28** effectively define an imaginary frustoconical surface.

On the inside face **32** of the ring wall **24** are ribs **34**. The ribs **34** are sufficiently thin that they will flex readily in use, as explained below. The ribs **34** extend substantially axially over the full width of the wall **24**. The axially inner ends of the ribs **34**, near the edge **30** of the wall **24**, may be rounded or chamfered. The axially outer ends of the ribs **34** are not joined to the outer frame **18**. As shown in FIG. **3**, the outer frame **18** consists of bars **36** with large gaps **38** between them. The ribs **34** are positioned over the gaps, evenly spaced along the wall **24**. Ribs **34** that would merge into the bars forming the frame **18** are omitted.

Between the two end plates **16** is a spool **40**. The spool **40** has a cylindrical core **42** that fits over the arbors **20** and between the shoulders **22** with a sufficient play to allow the spool **40** to rotate freely, while remaining in position between the end plates **16**. The end plates **16** do not rotate. At each end of the core **42** is an end **44** comprising a radially extending end wall **46**. The end walls **46** may be substantially flat or may diverge radially outwardly, and are smooth on their sides facing the middle of the spool **40**. The radially outer rims of the ends **44** comprise generally cylindrical skirts **48** that face the ring walls **24** on the end plates **16**. The diameter of the skirts **48** is such that the flexible ribs **34** press lightly against the skirts **48**, as will be explained below. As shown in FIG. **4**, the sides of the end walls **46** facing outwards may have stiffening ribs or other structures within the skirts **48**.

As shown in FIG. **2**, the join between the skirt **48** of each spool end **44** and the end wall **46** is slightly closer to the middle of the box **12** than is the inner edge **30** of the wall **24**. The exposed length of the skirt **48** may be sufficient that the axial play of the spool **40** between the shoulders **22** does not result in the ring wall **24** overhanging the end walls **46** of the spool. The exposed length of the skirt **48** may be tapered or rounded to merge smoothly into the end walls **46**.

In use, a length of elongate material **50**, which may be, for example, electrical wire or cable or fiber optic cable, is

wound in a coil round the core **42** of the spool **40**, between the end walls **46**. A free end of the elongate material is led off from the outer surface of the coil generally tangentially, and is fed out through a hole or slot **52** in the box **12**. When a user wants a length of the elongate material, the user pulls on the free end, and draws the material off through the slot **52**. The spool **40** and the coil of material **50** rotate. The arbors **20** inside the ends of the core **42** act as plain bearings, supporting and guiding the spool **40** while permitting the spool to rotate. Especially if the user pulls the free end rapidly, the spool **40** can acquire a substantial angular velocity. Especially if the material **50** is heavy, for example, cable, the spool **40** can acquire a substantial angular momentum.

When the user has drawn off a sufficient length of material, the user may abruptly cease to pull on the free end, and may hold the free end to prevent more material from feeding off the coil. However, the spool **40** tends to continue to rotate, because of its acquired angular momentum. As a result, the outermost turns of the coil of material **50** may become expanded, and may not remain in place on the spool.

In the container **10** shown in the drawings, the flexible ribs **34**, which are fixed to the ring walls **24** and thus to the end plates **16**, press lightly on the skirts **48** of the spool ends **44**. The stiffness of the flexible ribs **34**, the diameter of the skirts **48** and the diameter, when the flexible ribs **34** are unstressed, of the space between the ribs, are selected in combination with the material of the spool and the end plates to select the frictional drag on the spool **40**. The frictional drag is selected so that the user does not feel an excessive resistance to drawing off the material **50**, and the material **50** is not subjected to an undue tension, but so that the braking action stops the rotation of the spool promptly when the user ceases to pull on the free end of the material **50**.

If the outer turns of the coil of material **50** do become expanded and displaced, the flexible ribs **34**, which bridge the gap between the rotatable spool ends **44** and the non-rotatable ring walls **24**, hinder the material **50** from entering the gap and jamming the rotation. The triangular ribs **28** hinder the material **50** from becoming wound round the outside of the ring walls **24**, because the sloping or conical shape defined by the ribs **28** encourages the material to slide off the ribs, and back onto the spool **40**, as soon as a tension is applied to the free end of the material. If the elongate material tends to catch on the exposed part of the skirts **48**, any rounding or taper of these parts of the skirts may encourage the material to slide off the spool ends **44** and back onto the main coil of the material **50**.

To assemble the container **10**, the spool **40** is manufactured and, if necessary, assembled, and the material **50** is wound onto the spool. The free outer end of the material may be attached or secured temporarily to the outer end of the coil. The end plates **16** may be attached to the insides of the ends **14** of the box **12**, for example, with adhesive, or by tabs on the end plates **16** engaging slots in the box **12**, or in any other convenient way. Alternatively, the end plates **16** may simply be a snug fit within the box **12**.

The box **12**, including the end plates **16**, is then assembled round the loaded spool **40**, **50**. Because of the friction ribs **34**, the spool ends **44** are a force fit within the ring walls **24**. However, the rounded or chamfered ends of the ribs **34** assist the spool ends **44** in deflecting the friction ribs **34** and fitting between them. The assembled box **12** may have a top or other flap that can be opened so that, when the material **50** is to be used, the free end can be retrieved and fed out through the slot **52**.

Although specific embodiments have been described, various modifications may be made without departing from the scope and spirit of the invention as defined by the appended claims. For example, depending on the size of the spool **50**, the box **12** may be made of cardboard. The box can alternatively be made from another substantially rigid material, for example, layered paper stock or plastic. The spool **40** and the end plates **16** have been shown in the drawings as being made of molded plastic. The spool and the end plates can alternatively be made of another suitable material, or can be fabricated from components, which may be of different materials. It is not necessary for the box ends **14** and the end plates **16** to be distinct components.

The dispenser **10** has been shown with an end plate at each end, each end plate having an arbor **20** and a ring wall **24**, each ring wall **24** having triangular ribs **28** and having friction ribs **34** bearing on the skirt **48** of the spool **40**. However, arrangements are possible in which some of those features are provided at only one end. In particular, in a dispenser intended to be used with the axis of the spool **40** vertical, and with a definite top and bottom, the material **50** might consistently drop to the bottom end. The triangular ribs **28** might then be wanted only at the bottom end. The ring wall **24** and friction ribs **34** might then be wanted only at the bottom for the purpose of preventing the elongate material from jamming between the spool **40** and the end plate **16**, but might be wanted at the top for their frictional action. The top arbor **20** might still be wanted to stabilize the spool **40**, and the top end plate **16** might still be wanted as a mounting for the top arbor **20** even if the top ring wall **24** was omitted.

The shapes and sizes of the various components may vary depending on the materials used for the container, on the size of the container, and on the properties of the elongate material **50** with which the container is intended to be used. For example, if components are described as straight or cylindrical, and are made of molded plastic, those components may in practice be tapered by several degrees for easier demolding.

As shown in FIG. **2**, the outer edges of the triangular ribs **28** effectively define an imaginary frustoconical surface with a cone half angle of about 300. It is not necessary for the ribs to be triangular, defining a frustoconical surface. For example, the outer edges of the ribs could be concave, defining an imaginary surface that fans out like the bell of a trumpet. The angle of taper, or the minimum angle of taper, is then selected to be sufficient to guide the elongate material **50** off the ribs and back into the spool **40**. An appropriate numerical value for the minimum angle of taper depends on the size of the container **12** and the properties of the material **50**.

As shown in FIG. **2**, there is a short width **60** of the wall **24** between the ends of the ribs **28** and the edge **30** of the wall. It is not necessary for there to be such a width **60** of wall with no ribs. The sloping edges of the ribs **28** may meet the edge **30** of the wall exactly, or the ribs **28** may have a residual height at their narrow ends. If there is a width **60** of wall with no ribs between the ends of the ribs **28** and the edge **30** of the wall **24**, that width **60** should be narrow enough that the material wound on the spool does not lodge stably thereon.

It will be appreciated by those skilled in the art, that the present invention may be practiced in various alternate forms and configurations. The previously detailed description of the disclosed embodiments is presented for purposes of clarity of understanding only, and no unnecessary limitations should be implied therefrom.

I claim:

1. A dispenser for elongate material, comprising:

a support;

at least one end plate, the support fixed to the end plate;

a spool mounted on the support, the spool having a core and two ends extending radially outward from the core;

at least one ring on the end plate, the at least one ring encircling a respective end of the spool, the radial outside of at least one said ring being provided with a formation tapering from the end plate towards the core of the spool.

2. A dispenser according to claim 1, further comprising a pair of end plates, a pair of supports and a pair of rings, each ring encircling a respective end of the spool.

3. A dispenser according to claim 1, wherein said respective spool end has at its periphery a skirt extending axially away from the core of the spool and facing radially outwards, facing the relatively inner surface of the at least one ring.

4. A dispenser according to claim 1, wherein said tapering formation comprises a plurality of guide ribs on the relatively outer surface outside of said at least one ring.

5. A dispenser according to claim 4, wherein the guide ribs are generally triangular.

6. A dispenser according to claim 1, further comprising a plurality of friction ribs extending between at least one said ring and the respective end of the spool.

7. A dispenser according to claim 6, wherein said friction ribs are attached to said ring and press against a rim of said respective end of the spool.

8. A dispenser according to claim 6, wherein the inside of said ring is generally cylindrical, the outside of said rim is generally cylindrical, and said ribs extend axially over the inside of said ring.

9. A dispenser according to claim 6, wherein said fiction, ribs are flexible, are fixed to one of said ring and said core, and press against the other of said ring and said core.

10. A dispenser according to claim 1, wherein the support further comprises a pair of end plates each comprising a support for said spool, at least one of said end plates comprising a respective said ring with said support for said spool at the center of said ring.

11. A dispenser according to claim 10, wherein each said support for said spool comprises an arbor for an end of the core of the spool.

12. A dispenser according to claim 1, further comprising a box enclosing said spool.

13. A dispenser according to claim 12, further comprising a pair of end plates within said box, each end plate comprising a support for said spool, at least one of said end plates comprising a respective said ring with said support for said spool at the center of said ring.

14. A dispenser for elongate material, comprising:

a holder;

a spool rotatably mounted in the holder, the spool having a core and at least one end extending radially outward from the core;

at least one ring on the holder, encircling a respective end of the core; and

a plurality of friction ribs forming a frictional engagement between said at least one ring and the respective end of the core.

15. A dispenser according to claim 14, wherein said at least one ring comprises a pair of rings each encircling a respective end of the spool.

16. A dispenser according to claim 14, wherein said at least one spool end has at its periphery a skirt extending axially away from the middle of the spool and facing radially outwards, facing the respective said ring.

17. A dispenser according to claim 14, wherein said friction ribs are attached to said ring and press against a rim of said respective end of the spool.

18. A dispenser according to claim 14, wherein the inside of said ring is generally cylindrical, the outside of said rim is generally cylindrical, and said ribs extend axially over the inside of said ring.

19. A dispenser according to claim 14, wherein said friction ribs are flexible, are fixed to one of said ring and said spool, and press against the other of said ring and said spool.

20. A dispenser according to claim 14, wherein the holder further comprises a pair of end plates, each comprising one of said rings and each comprising a support for said spool at the center of said ring.

21. A dispenser according to claim 20, wherein each said support for said spool comprises an arbor for an end of the core of the spool.

22. A dispenser according to claim 14, further comprising a box enclosing said spool.

23. A dispenser for elongate material, comprising:

a box;

a pair of end plates within the box, each comprising a ring having a generally cylindrical inside surface and an arbor at the center of said ring;

a spool rotatably mounted on said arbors, the spool having a core and two ends extending radially outward from the core, wherein each said spool end has at its periphery a skirt extending axially away from the middle of the spool, said skirt having a generally cylindrical outside surface facing the inside surface of the respective said ring;

a plurality of generally triangular guide ribs on the outside. of each ring tapering towards the middle of the spool; and

a plurality of flexible friction ribs extending axially on the inside of said ring pressing against the skirt of said respective spool end.

24. An end plate for a dispenser for elongate material, comprising:

a central support to rotatably mount an end of a spool on one side of the end plate;

a ring having a generally cylindrical inside surface concentric with the support;

a plurality of guide ribs on the outside of the ring tapering towards said one side of the end plate; and

a plurality of flexible friction ribs extending axially from the inside of said ring.

25. A dispenser for elongate material, comprising:

a support;

a spool rotatably mounted in the support, the spool having a core and two ends extending radially outward from the core;

a pair of rings on the support, each ring encircling a respective end of the spool, the radial outside of at least one of said rings being provided with a formation tapering towards the middle of the spool.

26. A dispenser for elongate material, comprising:

a support;

a spool rotatably mounted in the support, the spool having a core and two ends extending radially outward from the core;

at least one ring on the support, encircling a respective end of the spool, the radial outside of at least one said ring being provided with a formation tapering towards the middle of the spool; and

said respective spool end has at its periphery a skirt extending axially away from the middle of the spool and facing radially outwards, facing the said at least one ring.

27. A dispenser for elongate material, comprising:

a support;

a spool rotatably mounted in the support, the spool having a core and two ends extending radially outward from the core;

at least one ring on the support, encircling a respective end of the spool, the radial outside of at least one said ring being provided with a formation tapering towards the middle of the spool, said tapering formation comprises a plurality of guide ribs on the outside of said at least one ring.

28. A dispenser according to claim **27**, wherein the guide ribs are generally triangular.

29. A dispenser for elongate material, comprising:

a support;

a spool rotatably mounted in the support, the spool having a core and two ends extending radially outward from the core;

at least one ring on the support, encircling a respective end of the spool, the radial outside of at least one said ring being provided with a formation tapering towards the middle of the spool; and

a plurality of friction ribs extending between said at least one ring and the respective end of the spool.

30. A dispenser according to claim **29**, wherein said friction ribs are attached to said ring and press against a rim of said respective end of the spool.

31. A dispenser according to claim **29**, wherein the inside of said ring is generally cylindrical, the outside of said rim is generally cylindrical, and said ribs extend axially over the inside of said ring.

32. A dispenser according to claim **29**, wherein said fiction ribs are flexible, are fixed to one of said ring and said core, and press against the other of said ring and said core.

33. A dispenser for elongate material, comprising:

a support;

a spool rotatably mounted in the support, the spool having a core and two ends extending radially outward from the core;

at least one ring on the support, encircling a respective end of the spool, the radial outside of at least one said ring being provided with a formation tapering towards the middle of the spool,

the support further comprises a pair of end plates each comprising a support for said spool, at least one of said end plates comprising a respective said ring with said support for said spool at the center of said ring.

34. A dispenser according to claim **33**, wherein each said support for said spool comprises an arbor for an end of the core of the spool.

35. A dispenser for elongate material, comprising:

a spool having a core and two ends extending radially outward from the core;

at least one ring, encircling a respective end of the spool, the radial outside of at least one said ring being provided with a formation tapering towards the middle of the spool;

a box enclosing said spool; and

a pair of end plates within said box, each end plate comprising a support for said spool, at least one of said end plates comprising the ring, with said support for said spool at the center of said ring.

* * * * *