US008016222B2

(12) **United States Patent**
Galgano et al.

(10) **Patent No.: US 8,016,222 B2**
(45) **Date of Patent: Sep. 13, 2011**

(54) **WIRE AND CABLE DISPENSING CONTAINER AND SYSTEMS**

(75) Inventors: **Richard Galgano**, Naperville, IL (US); **Mark K. Winkel**, Indian Head Park, IL (US); **Martin C. McGuire**, Burr Ridge, IL (US); **Martin J. McGuire**, Downers Grove, IL (US)

(73) Assignee: **Windy City Wire Cable and Technology Products, LLC**, Bolingbrook, IL (US)

(*) Notice: Subject to any disclaimer, the term of this patent is extended or adjusted under 35 U.S.C. 154(b) by 200 days.

(21) Appl. No.: **12/103,790**

(22) Filed: **Apr. 16, 2008**

(65) **Prior Publication Data**

US 2008/0191436 A1 Aug. 14, 2008

(51) **Int. Cl.**
B65H 16/02 (2006.01)

(52) **U.S. Cl.** **242/557**; 242/403; 242/594.3; 242/594.4

(58) **Field of Classification Search** 242/614, 242/614.1, 608, 588, 588.3, 588.6, 598.5, 242/596, 596.7, 596.8, 615, 615.3, 128, 129, 242/129.51, 129.53, 557, 403, 594.3, 594.4, 242/533.8; 206/389, 395–397, 403–405, 206/408–409, 413–416

See application file for complete search history.

(56) **References Cited**

U.S. PATENT DOCUMENTS

3,412,847 A 11/1968 Wise et al.
3,680,810 A 8/1972 Jarmalow
3,693,784 A 9/1972 Holmes
3,854,509 A * 12/1974 Bailey 242/594.3
4,367,853 A 1/1983 Kotzur
4,406,419 A 9/1983 Kotzur
4,477,033 A 10/1984 Kotzur et al.
4,741,495 A 5/1988 Kotzur
(Continued)

OTHER PUBLICATIONS

Wire Caddy, Cable Reel Stands—Quick Spooler, downloaded from http://www.guickspooler.com/ on Jul. 14, 2009.

(Continued)

Primary Examiner — William A Rivera
(74) *Attorney, Agent, or Firm* — Momkus McCluskey, LLC; Jefferson Perkins

(57) **ABSTRACT**

A container for the dispensing of wire or cable has an external carton which receives a reel of cable as supported by two caddies. Each caddy has an inwardly extending substantially cylindrical bushing which is received in a central hole of a respective cable reel flange. The cylindrical bushings are disposed on an axis which is a first distance from the upper surface of the bottom panel of the carton. The largest radius of each reel flange is preselected to be smaller than this such that the reel may freely rotate inside of the carton on the bushings. Cable is pulled through a slot in the carton's front panel. Preferably, left and right panels of the carton each have an arbor hole formed therein which receives an axial rod, the rod also extending through the reel and caddies. The axial rod may be used to join two or more containers together and may further serve as a support for attachment of a wheel truck on one end of the joined-together containers and a handle at its other end. An alternative, four-wheeled cart has multiple axial rods. An alternative hand truck likewise receives multiple axial rods through respective container passageways. In one embodiment, cable may be pulled through one or more pass-through slots formed in the tops and bottoms of stacked containers, such that cable from multiple containers is drawn through one slot on the top of the stack.

15 Claims, 12 Drawing Sheets

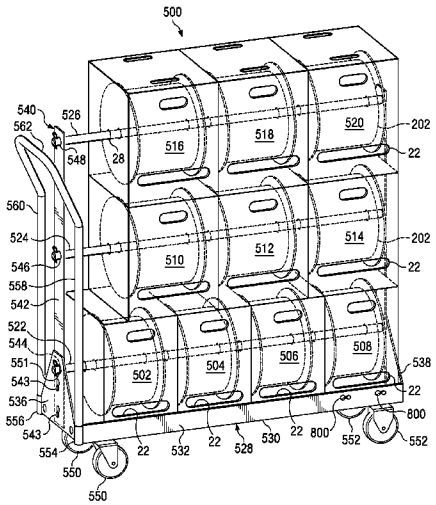

U.S. PATENT DOCUMENTS

5,222,683	A	6/1993	Blackshire	
5,529,186	A	6/1996	Bass	
5,551,647	A	9/1996	Browning	
5,704,479	A	1/1998	Barnett et al.	
5,775,621	A	7/1998	Sauber	
5,967,451	A	10/1999	Radaios	
6,003,667	A	12/1999	Barnett et al.	
6,234,421	B1	5/2001	Cox et al.	
6,523,777	B2	2/2003	Gaudio	
7,025,300	B2	4/2006	Glassey	
7,204,452	B2	4/2007	Wilkinson et al.	
7,311,285	B2	12/2007	Rauchs et al.	
7,347,395	B2	3/2008	Horn	
2002/0125161	A1	9/2002	Cole	
2003/0080011	A1	5/2003	You et al.	
2005/0035240	A1	2/2005	Weck et al.	
2006/0038053	A1*	2/2006	Giovannoni	242/557

OTHER PUBLICATIONS

Welcome to Quickspooler.com ((((((How the Quickspooler was invented)))))), downloaded from http://www.quickspooler.com/QS.html on Jul. 14, 2009.

Cable Pull Stands, Cable Caddy, Rope Stand, downloaded from http://cableorganizer.com/cable-pull-stands/ on Jul. 14, 2009.

Hand Caddy, Data Cable Caddy, GL-9520, Greenlee 9520, downloaded from http://cableorganizer.com/greenlee/hand-caddy/ on Jul. 14, 2009.

Cable Reel Rollers, Wire Spool Caddies & Wire Reel Carts, downloaded from http://www.wctproducts.com/cable_reel_menu.htm on Jul. 14, 2009.

Cable Spool Caddy, Wire Spool Caddy & Wire Spool Carts, downloaded from http://www.wctproducts.com/reel_caddy_page.htm on Jul. 14, 2009.

Paige 1 Pac, downloaded from http://www.paigeelectric.com/onepac.html on Jul. 14, 2009.

BELDEN/8800/Hook-Up Wire Dispenser Rack (Only / Newark.com, downloaded from http://www.newark.com/belden/8800/hook-up-wire-dispenser-rack-only/dp/20M4466 on Jul. 14, 2009.

JONARD/WD-30-Y/Wire Dispenser/Newark.com, downloaded from http://www.newark.com/jonard/wd-30/wire-dispenser/dp10F7539 on Jul. 14, 2009.

Fiber in a Box, AFL Fiber In A Box, Berktek Fiber In A Box, Wholesale Fiber Optic Cable in A . . . , downloaded from http://www.americantechsupply.com/aflfiberinabox.htm on Jul. 14, 2009.

HOTS Jun. 2003, downloaded from http://www.wireville.com/hots/hotsJune03.html on Jul. 14, 2009.

Genesis Cat5 Cable, 1000 Foot Roll in Box—WG-4978210x—SmartHomeUSA.com, downloaded from http://www.smarthomeusa.com/ShopByManufacturer/Genesis/Item/WG-4978210x/ on Jul. 14, 2009.

Fiber Reel-in-Box Cost Savings Analysis, downloaded from http://www.superioressex.com/uploadedFiles/News/Case_Studies/fiber-reel-in%20box.pdf.

Carris Reels 10 Caddy, downloaded from http://www.carris.com/products/caddy10.html on Jul. 17, 2009.

Carris Reels Plastic Reels, downloaded from http://www.carris.com/plasticreels.html on Jul. 17, 2009.

Carris Reels Home Page, downloaded from http://www.carris.com/index.html on Jul. 17, 2009.

About TLE Mfg./dba Reels-USA, downloaded from http://reels-usa.com/ on Jul. 17, 2009.

Examiners Requisition issued by the Canadian Intellectual Property Office on Oct. 26, 2010 in Canadian Patent Application No. 2,646,964.

* cited by examiner

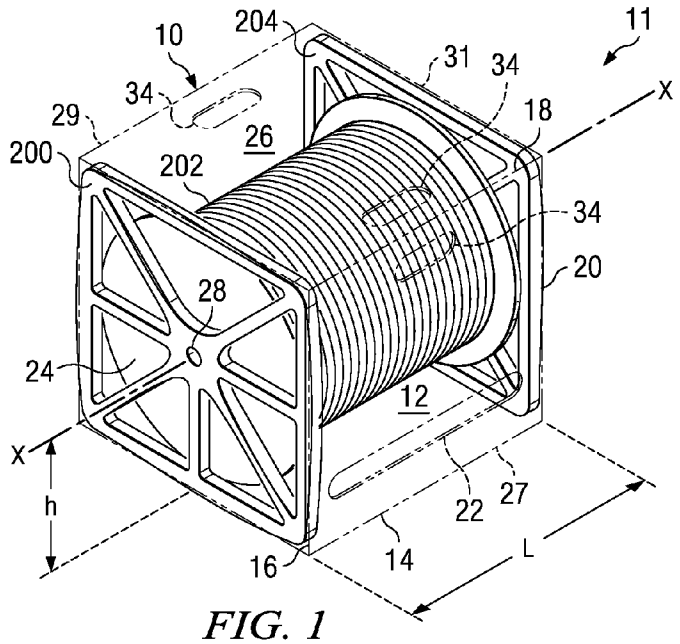

FIG. 1

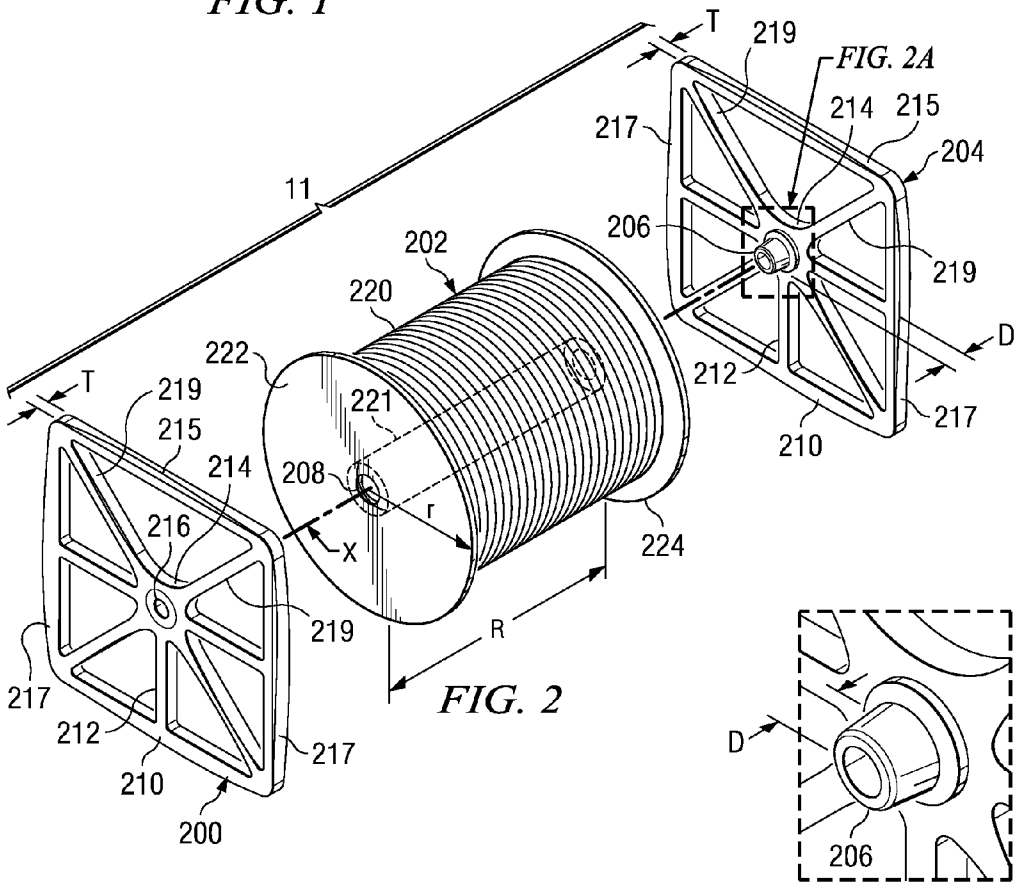

FIG. 2

FIG. 2A

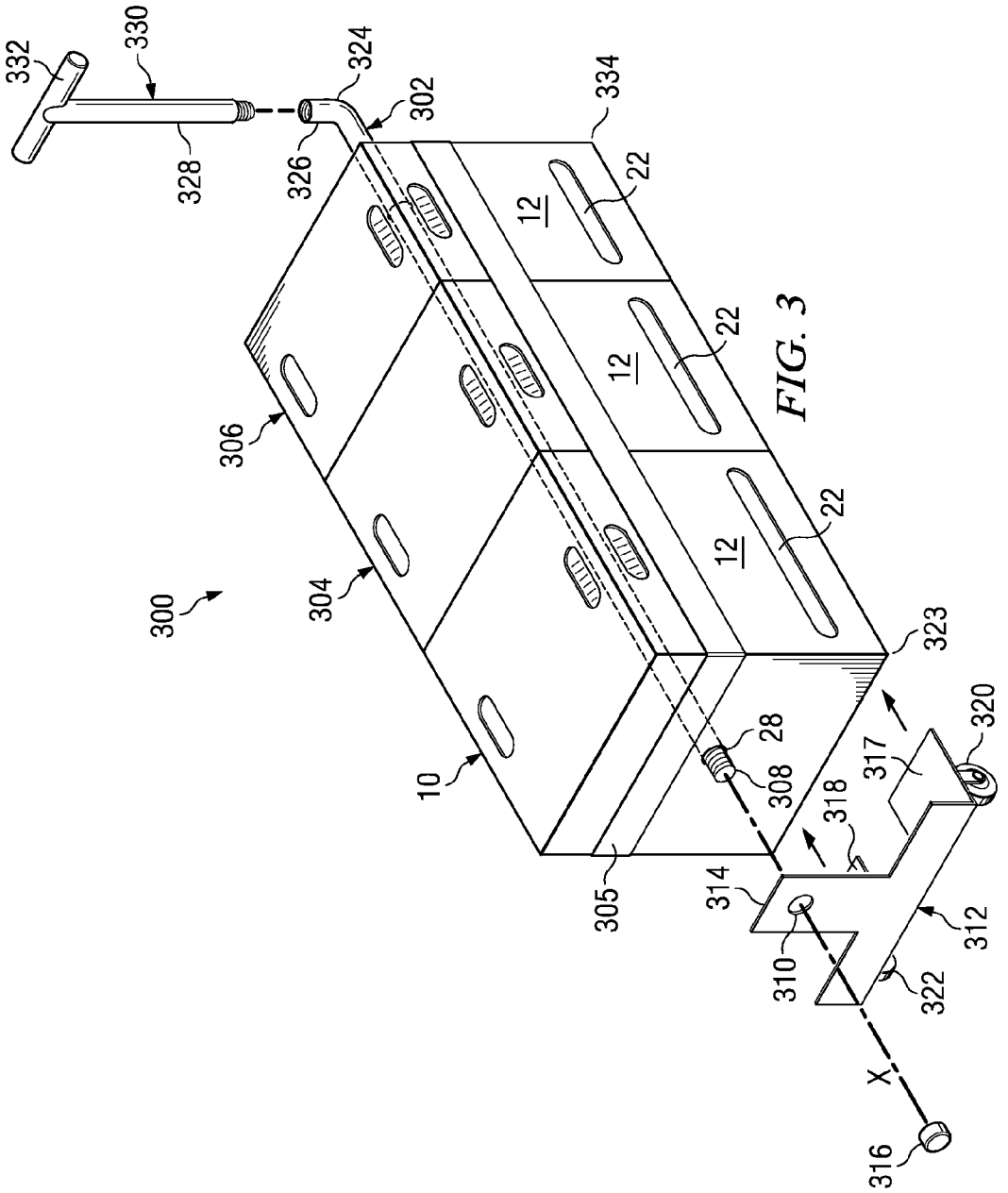
332
330
328
326
324
302
334
22
12
22
12
22
12
306
304
300
10
305
28
308
323
320
317
318
314
310
312
322
X
316

FIG. 3

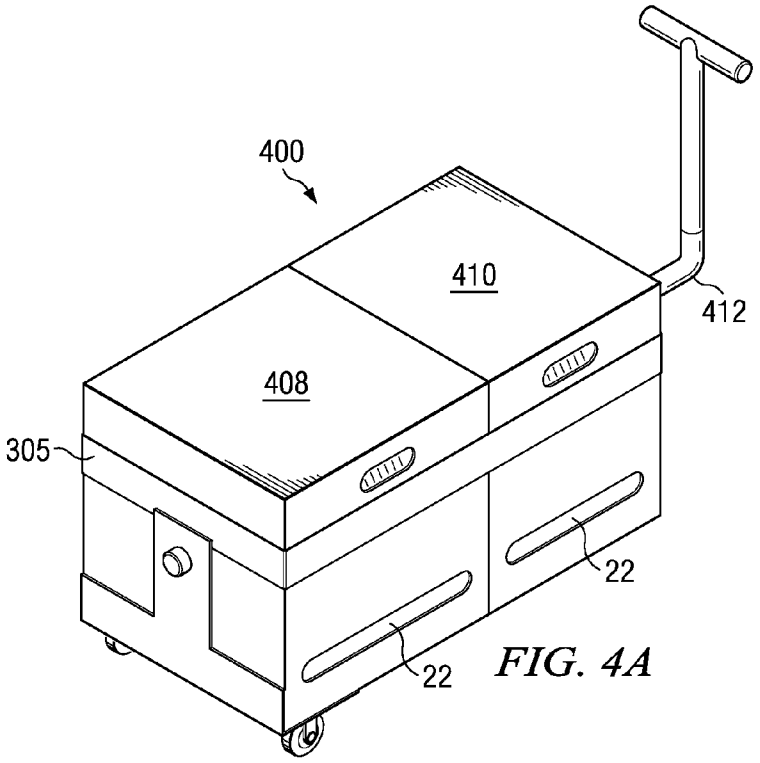

FIG. 4A

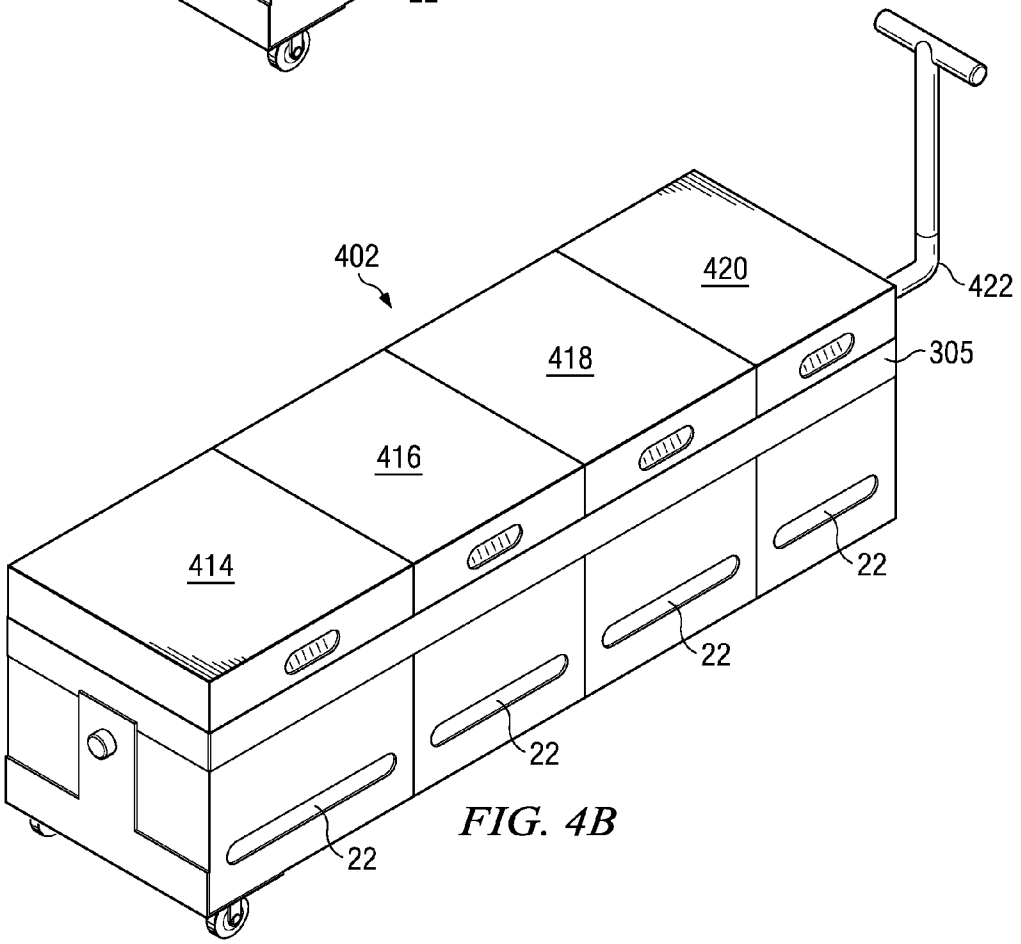

FIG. 4B

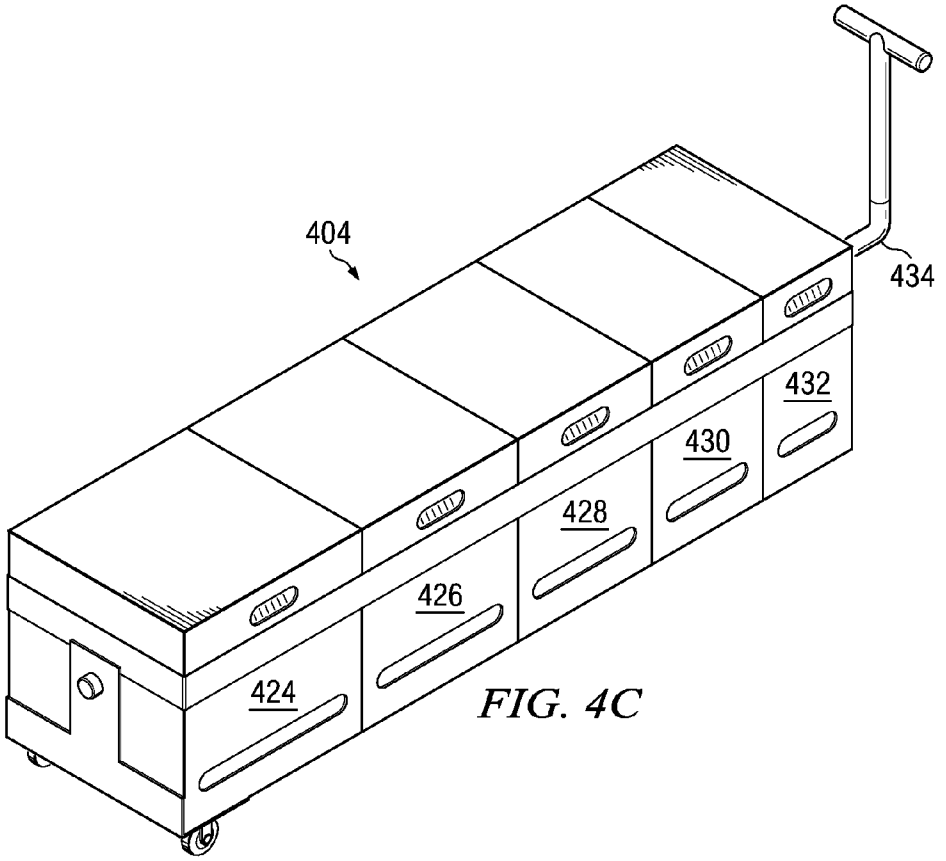

FIG. 4C

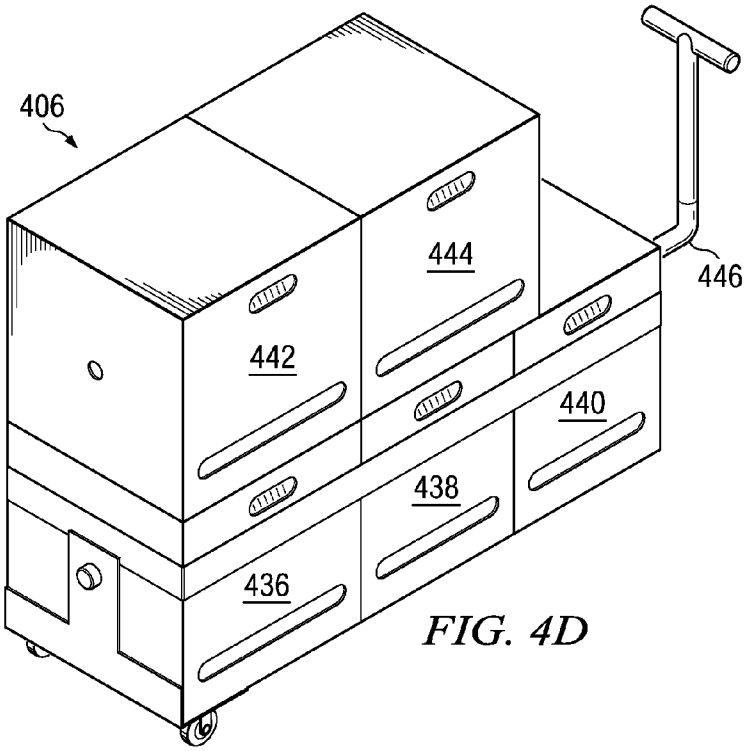

FIG. 4D

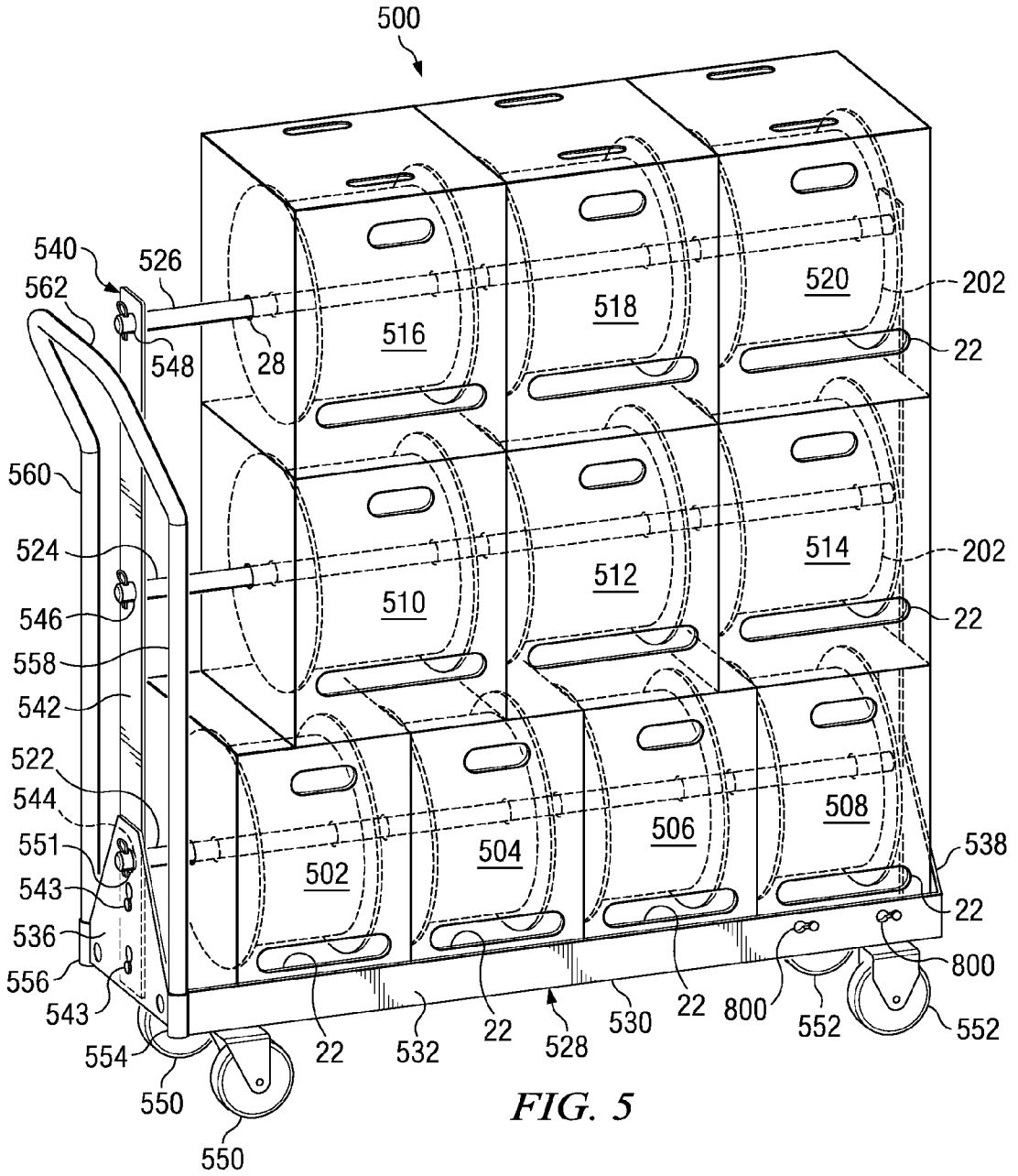
500
540
562
526
548
28
516
518
520
202
22
560
524
546
558
542
522
544
551
543
536
556
543
554
550
550
510
512
514
202
22
502
504
506
508
538
22
22
532
22
528
530
22
800
800
552
552

FIG. 5

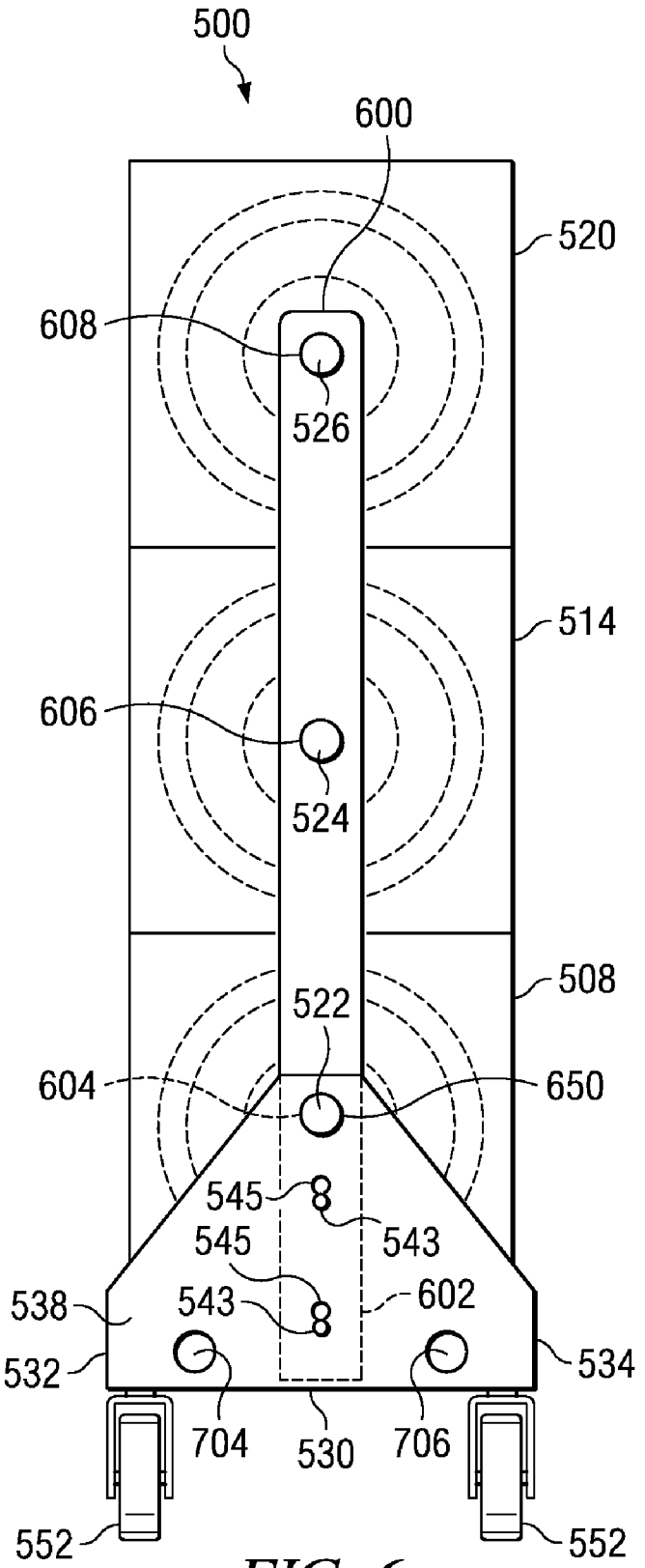
500
600
520
608
526
514
606
524
508
522
604
650
545
543
545
538
543
602
532
534
704
530
706
552
552

FIG. 6

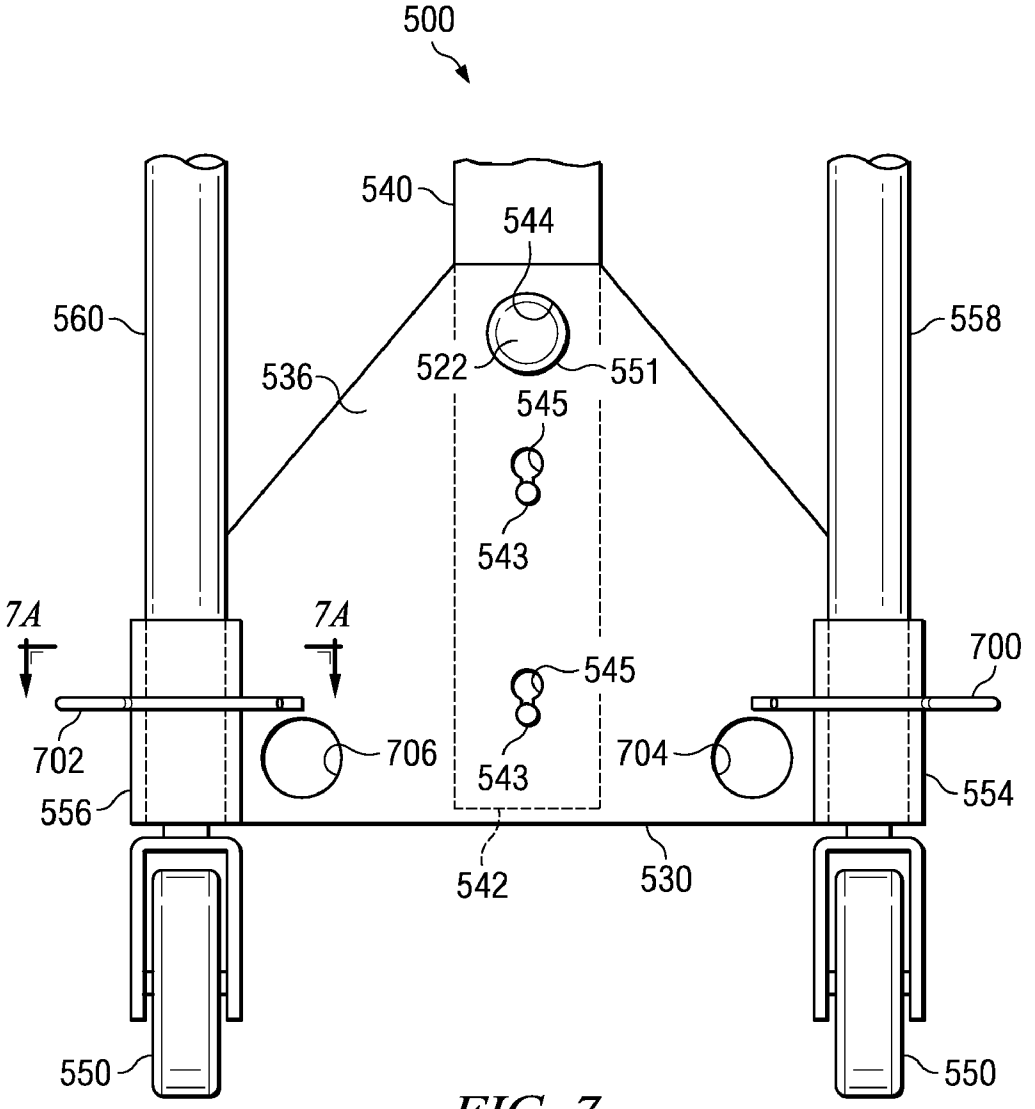
500
540
544
560
558
536
522
551
545
543
7A
7A
700
545
702
706
704
543
556
554
542
530
550
550

FIG. 7

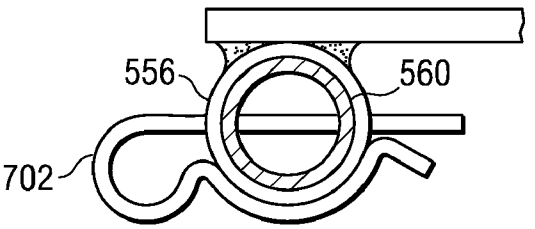
556
560
702

FIG. 7A

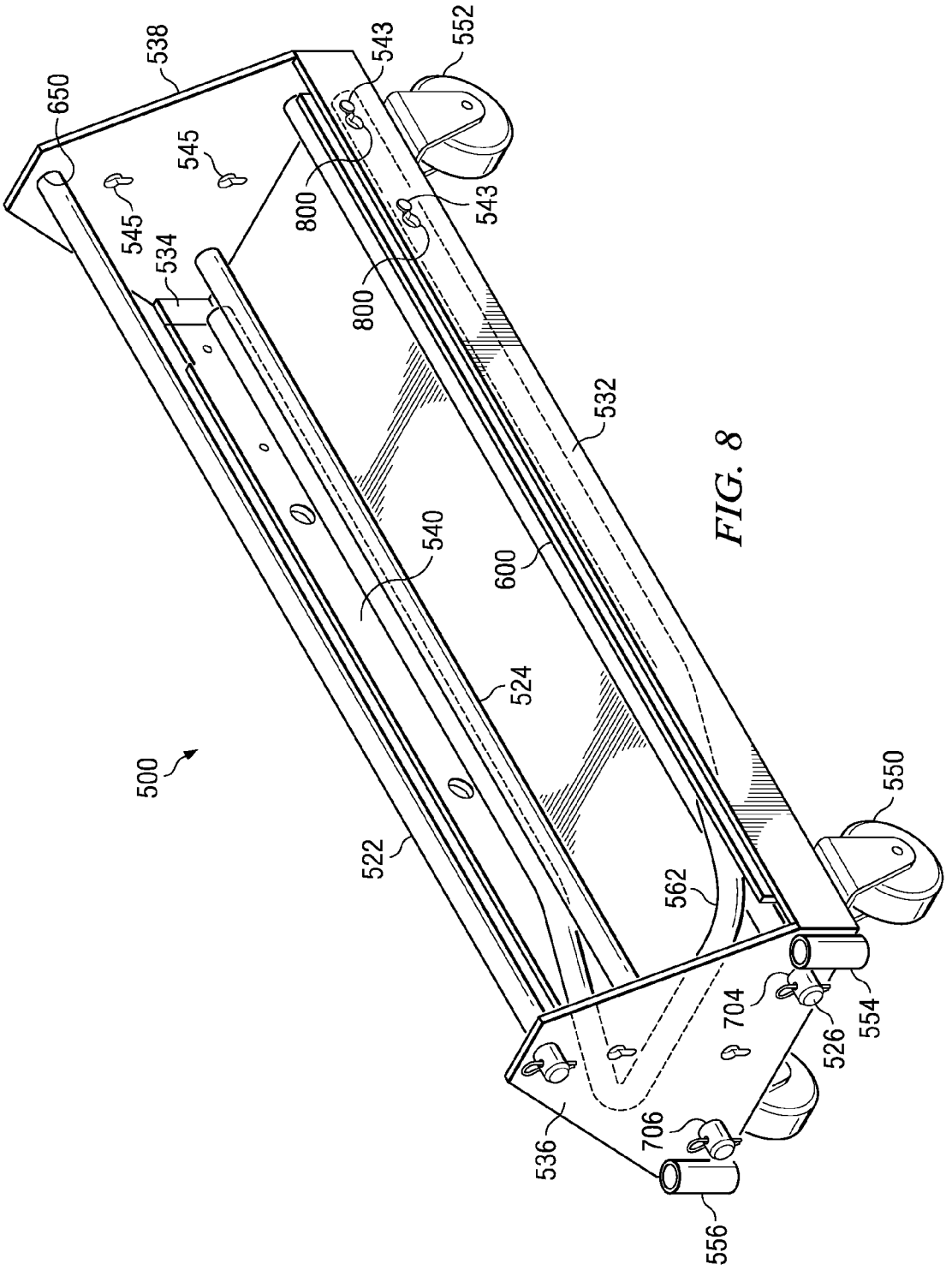
500
538
650
545
545
534
543
552
800
543
800
532
540
600
524
522
562
550
704
526
554
536
706
556

FIG. 8

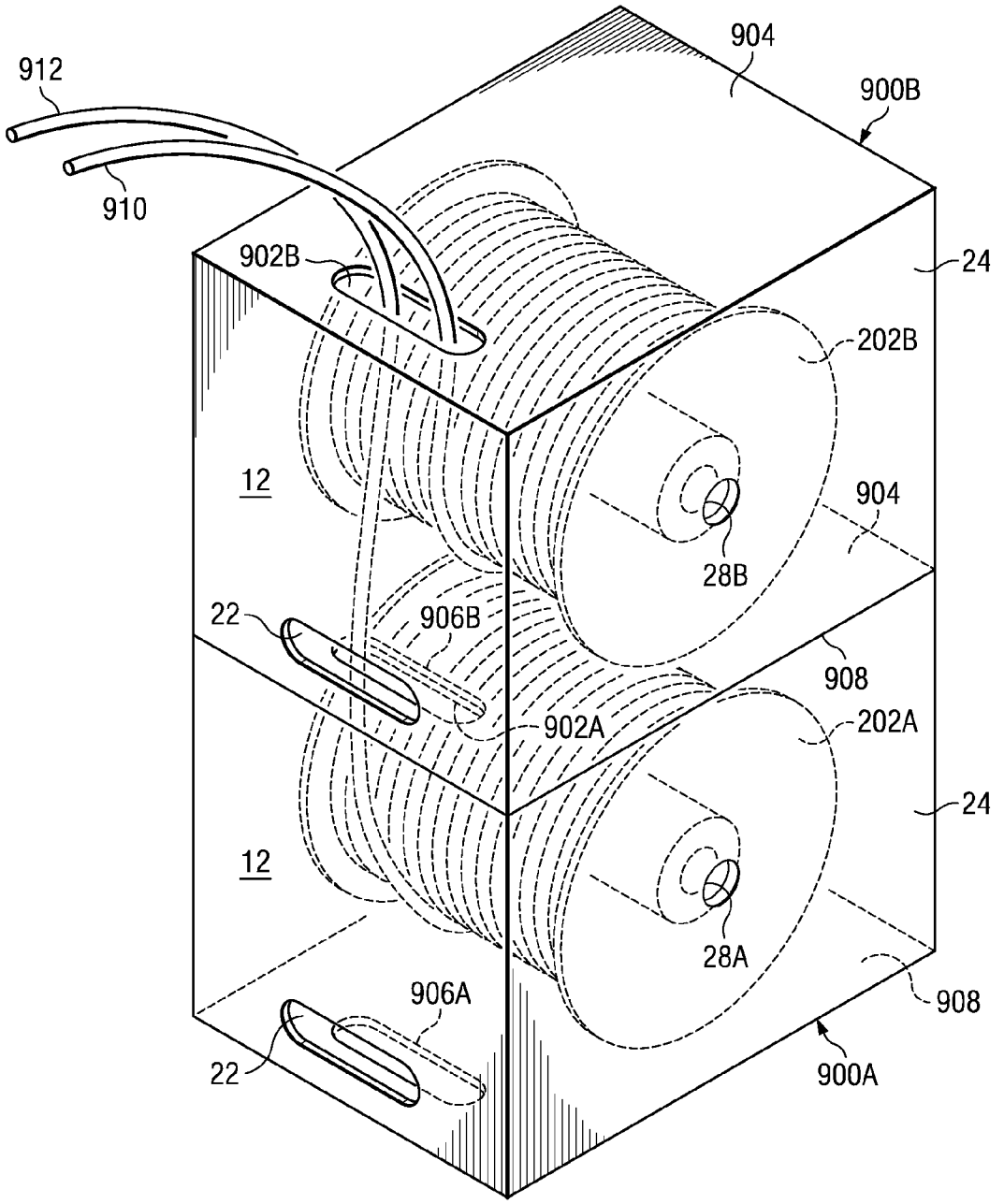
912
910
904
900B
902B
24
202B
12
904
28B
22
906B
908
902A
202A
24
12
28A
906A
908
22
900A

FIG. 9

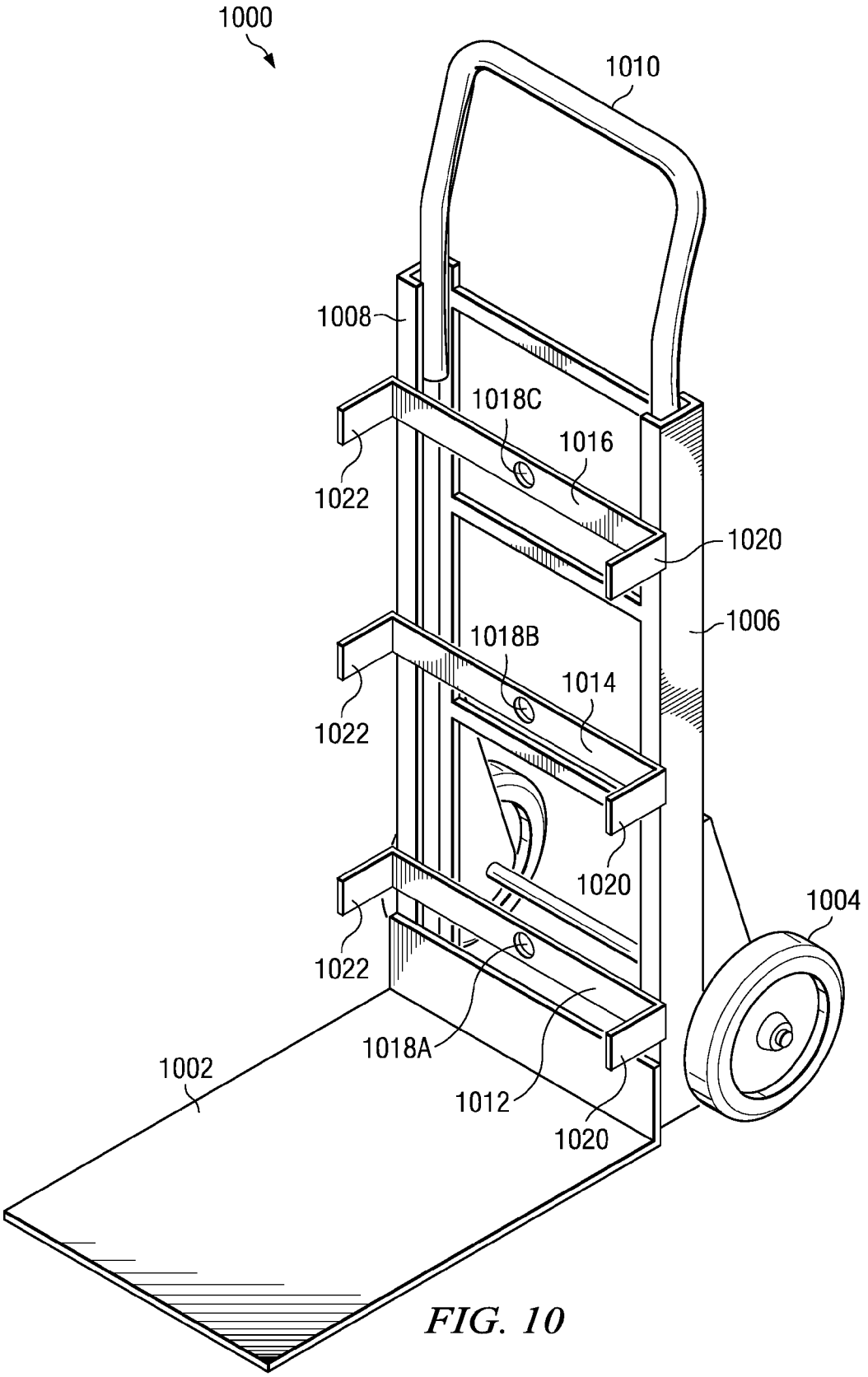
1000
1010
1008
1018C
1016
1022
1020
1006
1018B
1014
1022
1020
1004
1022
1018A
1002
1012
1020

FIG. 10

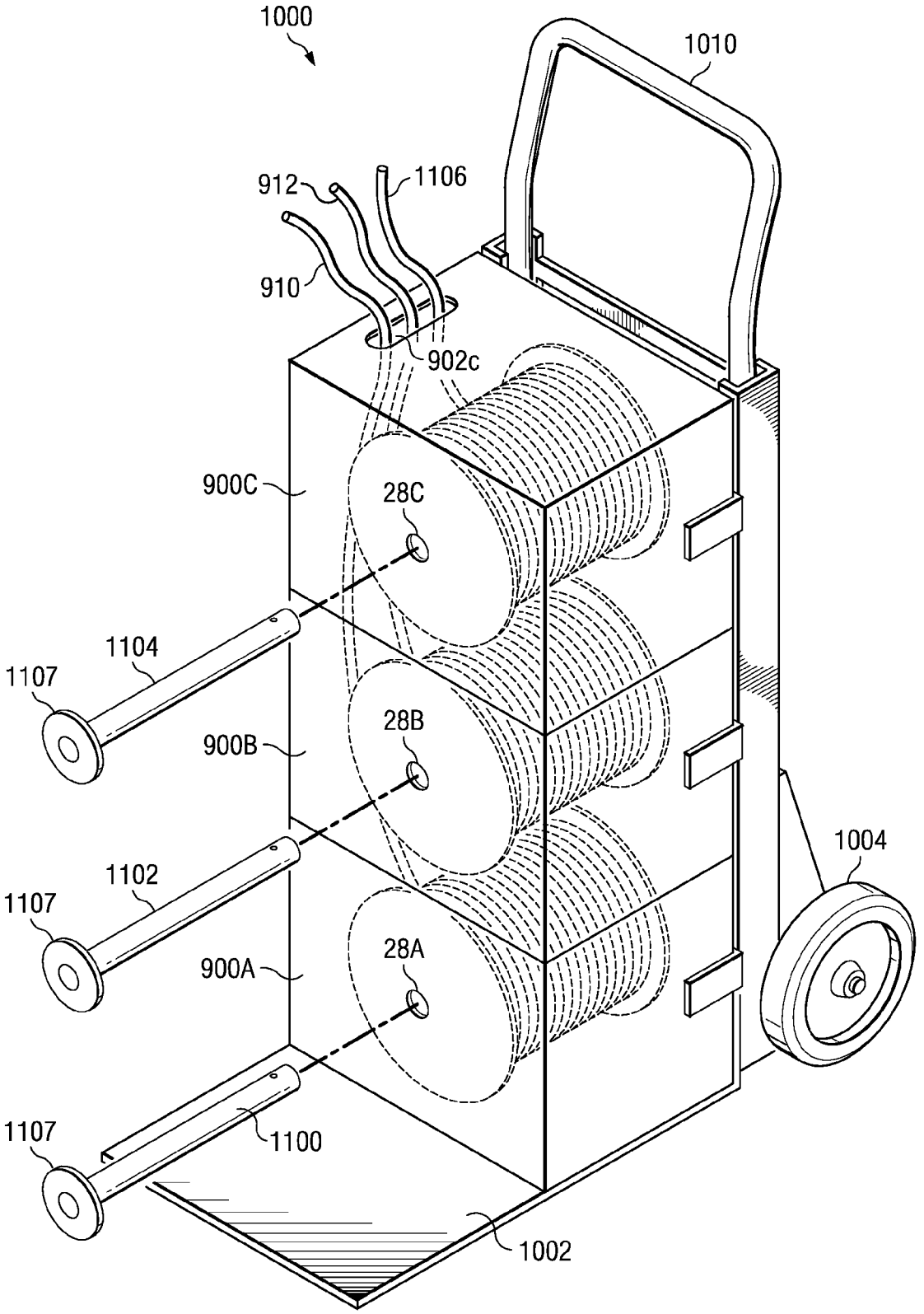
1000
1010
912
1106
910
902c
900C
28C
1104
1107
28B
900B
1004
1102
1107
28A
900A
1107
1100
1002

FIG. 11

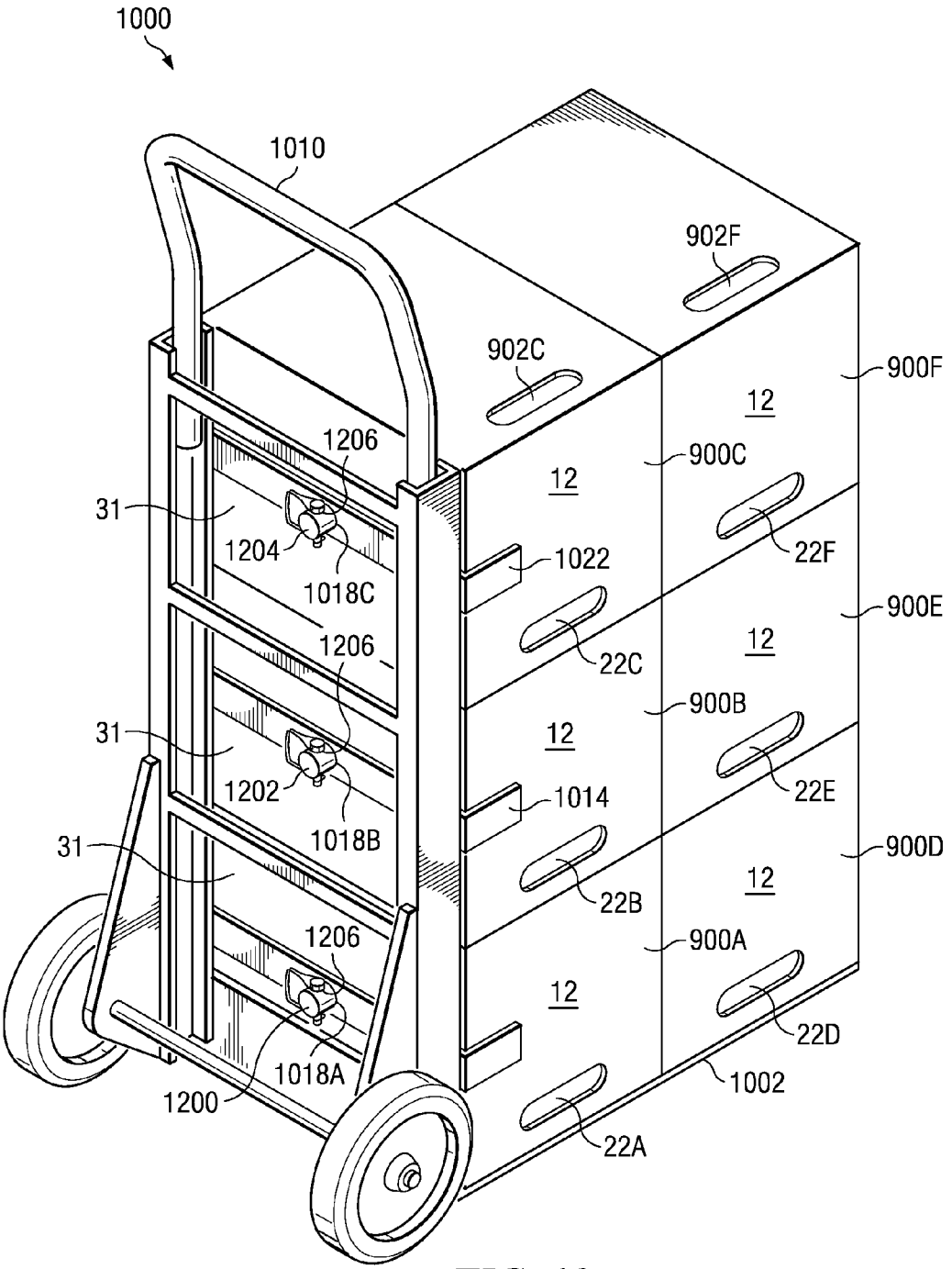
1000
1010
902F
902C
900F
12
900C
1206
12
31
1204
1022
22F
1018C
900E
1206
12
22C
900B
31
12
1202
1014
22E
1018B
900D
31
12
22B
1206
900A
12
22D
1018A
1002
1200
22A

FIG. 12

WIRE AND CABLE DISPENSING CONTAINER AND SYSTEMS

BACKGROUND OF THE INVENTION

Wire and cable for installation in residences and buildings typically comes on cable reels. The types of wire and cable so provided are numerous, and include 110V three-conductor wire, "Romex", and many different kinds of low-voltage, multiconductor insulated communications cable, such as that used for setting up Ethernet networks, intercom systems, entertainment systems and the connection of security sensors and devices. A new building under construction will need many kinds of these cables, and several reels of cable will be used by an installer on-site.

One known technique is to provide coils of such cable in boxes, and to create a hole in a front or top panel of the (typically cardboard) box for pulling out a desired length of cable. This conventional method has a drawback in that the cable may kink inside of the box or otherwise resist being pulled out of the box to such an extent that a cable installer or technician finds that he or she is pulling the box across the floor. Oftentimes the installer has to install several different lengths of cable on a single run. To do this, the installer has had to identify which kinds of cable he or she needs, individually pull cable out of separate boxes and estimate as best as he or she can the amount of cable so pulled.

These boxes of cable are heavy and it takes some effort to move them around. In complex jobs it is easy for one needed box of cable to become physically dissociated from one or more other boxes of cable that will supply lengths of different cable for the same run. A need therefore persists for more efficient methods and apparatus for dispensing cable.

SUMMARY OF THE INVENTION

One aspect of the invention provides a container for the dispensing of cable wound on a cable reel. The container includes a carton having a bottom, left and right panels. A left caddy is disposed in the carton adjacent an interior surface of the left carton panel. A right caddy is disposed in the carton adjacent an interior surface of the right panel. Each of the caddies has a substantially cylindrical bushing surface which extends inwardly along an axis. The axis is parallel to the bottom panel and is disposed at a predetermined first distance therefrom.

The caddies support therebetween a cable reel having a left flange, a right flange and central holes in each. The central flange holes of the cable reel are sized to receive the bushing surfaces of the caddies. The reel flanges have radii which are less than the first distance, permitting the reel of cable to freely rotate inside the carton. Preferably, the front panel of the carton has an elongated slot formed therein to be parallel to the axis, so as to permit the dispensing or drawing out of a length of cable from the reel.

Containers according to the invention may be assembled together to form mobile multiple cable dispensing units or vehicles, from which lengths of several different cables may be withdrawn at the same time. In aid of this each carton preferably has arbor holes in its left and right panels formed on the axis. The left and right caddies of each container likewise have central holes, and a central passageway of the cable reel communicates its central flange holes. Together these holes and reel passageway form an axial passage sized to receive therethrough an axial support rod. Two, three or more cable reel containers are abutted together side by side such that their arbor holes are in axial alignment. An axial support rod, preselected to have a length a little longer than combined lengths of the containers, is inserted through all of them. A wheel truck is affixed to one end of the support rod and a handle is affixed to the other, thereby forming a single unit which may be conveniently wheeled from place to place by a cable installer.

The present invention further provides, as an alternative to the foregoing mobile unit, a cart in which at least two rows of reel containers can be placed, wherein each row of containers is supported and joined together by means of a respective axial support rod. The cart has front and rear ends each having a rod holder that receives ends of the support rods. When not in use, the cart may be broken down into a storage configuration by removing the support rods, vertical support rod holders and preferably an upstanding handle, and installing these in storage locations in the frame bottom, all without using tools.

In yet a further embodiment, there is provided a vehicle, such as a dolly or hand truck, which permits cable from several vertically stacked cartons to be pulled upward from a single carton orifice. A carton is provided in this embodiment which includes bottom and top cutouts pass-through slots such that cable from one carton can be passed completely through at least one carton on top of it.

The present invention permits the easy withdrawal of a length of cable from the cable payout slot formed in the front panel of the carton. When the containers are assembled together in at least one row, an installer may withdraw lengths of cable from each of several containers at once. The heavier reaction mass of the assembled containers permits the installer to pull the cable(s) with more tension, as there will be less of a tendency of the assembled unit (or cart) to move in the direction of pull. When different kinds of cable are to be installed in a run in which the cables will all be of the same length, the present invention permits the installer to withdraw the same length of these different kinds of cable from different containers in the unit or cart, all at the same time.

BRIEF DESCRIPTION OF THE DRAWINGS

Further aspects of the invention and their advantages can be discerned in the following detailed description, in which like characters denote like parts and in which:

FIG. **1** is an isometric view of a single container or carton according to the invention, in which an outer carton wall is shown in phantom to reveal internal components;

FIG. **2** is an exploded view of a cable reel and support caddies used in the container shown in FIG. **1**;

FIG. **2**A is a detail of FIG. **2** showing a preferred caddy bushing;

FIG. **3** is an exploded isometric view of a first mobile cable dispensing system according to the invention, made up in part of cartons similar to those shown in FIGS. **1** and **2**;

FIGS. **4**A-**4**D are variations on the system shown in FIG. **3**, in which the size and number of joined cartons is varied;

FIG. **5** is an isometric view of a second mobile cable dispensing system according to the invention, as including a cart;

FIG. **6** is a rear end view of the cart shown in FIG. **5**;

FIG. **7** is a detail of the front of the cart shown in FIG. **5**;

FIG. **7**A is a detail sectional view taken substantially along line **7**A-**7**A of FIG. **7**;

FIG. **8** is an isometric view of the cart shown in FIG. **5**, in a folded or "broken down" condition in which it can be easily transported or stored;

FIG. **9** is an isometric view of two stacked cartons according to an further embodiment of the invention, showing the function of vertical cable pass-through;

FIG. **10** is an isometric view of two-wheeled hand truck or dolly for use with the cartons shown in FIG. **9**;

FIG. **11** is an exploded isometric view of the hand truck shown in FIG. **10**, showing the loading of a single stack of cartons; and

FIG. **12** is an isometric view from another angle of the hand truck shown in FIG. **10**, as shown with two stacks of cartons.

DETAILED DESCRIPTION

FIGS. **1** and **2** show a cable reel carton indicated generally at **10**, which in turn forms the exterior components of a cable reel container **11**. Carton **10** is preferably formed of a single sheet of corrugated cardboard and includes a front panel **12** having a bottom side **14**, a left side **16**, a top side **18** and a right side **20**. The front panel **12** preferably has, in a lower portion thereof, an elongate die-cut cable dispensing or payout slot **22** through which cable or wire may be pulled. The slot **22** is elongate in a direction parallel to a cable reel axis X and is long enough to permit cable to come off the reel at right angles to the reel axis and through the slot **22**, no matter where on the reel the cable is presently being unspooled. Preferably the length of the slot **22** is selected to be at least roughly the same as the distance between the internal surfaces of the two cable reel flanges (described below).

Carton **10** also includes a left panel **24** which extends rearwardly from side **16** and at right angles to the front panel **12**, and a top panel **26** which extends rearwardly from top side **18** and at right angles to the front panel **12** and left panel **24**. The carton **10** is completed by a bottom panel **27**, a rear panel **29** and a right panel **31**, the last of which is a mirror image of the left panel **24**. An arbor hole **28** is formed in left panel **24** around the horizontal axis X, axis X being a predetermined distance h from an upper surface of the carton bottom panel **27**. The cable payout slot **22** is preferably positioned well below the axis X in order to better approximate the point of departure of the cable from the reel, which will be at some nonzero radius from the axis X. Alternatively the cable payout or dispensing slot **22** could be positioned above axis X. Payout slot **22** may be defined by a closed line of perforations in corrugated cardboard front panel **12**. In this instance, container **11** would be shipped with the payout slot **22** closed. At the installation site, the installer would open slot **22** by punching out the perforation.

Conveniently, handholes **34** may be die-cut into the cardboard panels **12**, **26**, **29** for ease in handling. In alternative embodiments the cable payout slot **22** can be repeated in top panel **26** and/or rear panel **29**, so as to give the user some flexibility in arranging the cartons in the mobile unit or on the cart (later described) and some ability to select how the cable will exit the carton **10**. An embodiment in which the carton has elongate pass-through slots in both the top and bottom panels is described in conjunction with FIG. **9**.

The interior components of container **11** are shown in exploded view in FIG. **2**. A preferably spoked left caddy **200** is, in use, disposed interiorly adjacent an inner surface of the left carton panel **24**. Caddy **200** may be injection-molded from a tough plastic that at the least is capable of suspending half of the weight of a full cable reel **202** without buckling. A right caddy **204** can be formed from the same mold as the one which makes left caddy **200**. In use, the right caddy or reel support member **204** is positioned interiorly adjacent an inner surface of the right carton panel **31**.

As best seen in FIG. **2**A, each caddy **200**, **204** has a substantially cylindrical bushing **206** which extends axially from a general plane in which the remainder of caddy **200**, **204** is formed toward the other caddy. The bushing **206** could be formed from a surface of rotation other than a straight cylinder; it could, for example, have a terminal lip of increased radius that would run in an annular groove (not shown) in the reel flange central hole **208**. Such a departure from a straight cylinder could allow the caddies **200**, **204** to be snapped to the cable reel **202**. In the illustrated embodiment the bushing surface **206** is slightly tapered toward its free end and has a terminal curved or rounded surface. For the purpose of defining the surface of bushing **206** as "substantially cylindrical", these departures from a perfect mathematical cylinder are to be included in the definition. The taper and terminal curved or rounded surface aid in registering the bushing **206** within the reel flange central holes **208**.

Since caddies **200**, **204** are preferably molded of a hard plastic, the surfaces of bushings **206** tend to have a low amount of friction and can be used without augmentation. In alternative embodiments, the bushings **206** can be either coated or sleeved to present surfaces which have an even lower coefficient of friction relative to the cable reel which is rotatably mounted between them. On the other hand, some resistance to rotation of the reel **202** around axis X is desirable, as this mitigates against the spinning of the reel **202** in the absence of tension on the cable being withdrawn. Were reel **202** to continue to spin a long time without such tension, the cable **220** could spool off of the reel **202** inside of the carton **10**.

The caddies or cable reel support members **200**, **204** have bodies which generally conform in two dimensions to the interior of the carton **10** into which they are designed to be placed, and in general will be of slightly smaller dimension than, but will conform to the shape of, left box panel **24** and right box panel **31**. To save weight it is preferred that the caddies **200**, **204** be spoked instead of be solid plates. The caddies **200**, **204** suspend between them a reel **202** of cable that can weigh many dozens of pounds. Accordingly it is preferred that each caddy **200**, **204** have a horizontal base member **210** which is meant to rest on an upper surface of bottom carton panel **27**. A central, vertically oriented spoke **212** can be formed to extend from the base member **210** to a central portion **214**, from which in turn bushing **206** extends. The spokes **212** will bear most of the weight of the reel **202**. Preferably each caddy has a top rail or horizontal member **215** which in use is disposed adjacent an internal surface of top panel **26** of the carton **10**. The top rail **215** can in turn be supported by side rails **217** and angled spokes **219**. The top rail **215** is useful in accepting a columnar load imposed by other reel containers **11** placed on top of the particular reel container **11** of which the caddies **200**, **204** are a part. Such container stacking occurs in the use of the cart illustrated in FIGS. **5** and **6** and described below, and also in the embodiment discussed in conjunction with FIGS. **9-12**. In one embodiment (not shown) the spoke **212** is duplicated in a vertical spoke collinear with it which extends from axis X to the top rail **215**.

Preferably the panels of carton **10**, the caddies **200**, **204**, the cable reel **202** and the bushings **206** are so sized that the carton interior prevents the reel **202** from coming off of the bushings **206**. The carton **10** will have an internal length L in between the internal surfaces of side panels **24** and **31**. Most of the distance L will be occupied by the reel **202**, which has a predetermined length R between external surfaces of the reel flanges **222**, **224**. Each caddy **200**, **204** will have a general body thickness T. The bushings **206** extend inwardly from the

general interior surfaces of the caddies **200**, **204** by a distance D. Preferably, the dimensions of these components are selected such that 2T+R is slightly less than L. On the other hand, 2T+R+2D should be somewhat greater than L, such that the cable reel **202** is forced to ride on the bushings **206** while the caddies **200**, **204** and the reel **202** are inside of the carton **10**. This dimensioning would not be necessary in those embodiments in which the caddies are snapped or otherwise affixed to the reel **202** prior to the insertion of all three components into a carton or box **10**. Further, there will be variations in reel lengths according to the amount and kind of cable wound thereon. In at least many cases, the caddies **200**, **204** will be used in many different carton sizes, so that dimension L of the carton **10** should closely follow cable reel length R.

The cable reel **202** is preselected to have a flange radius r which is smaller than axis height h. This will ensure that the reel **202** can rotate freely inside of carton **10** on bushings **206**.

Each caddy **200**, **204** has a central hole **216** sized to receive an axial support rod (later described) therethrough. Each reel **202** has an axial passageway **221** that joins together reel flange central holes **208**. Conveniently this axial passageway **221** can be formed by an interior volume of a tube which also bears the wound cable **220** on its exterior surface. As assembled and in the condition shown in FIG. **1**, each carton **10** therefore has a free passageway all the way along axis X from one side of the box **10** to the other, including a left arbor hole **28**, central hole **216** in caddy **200**, central hole **208** in left cable reel flange **222**, a central passageway between left cable reel flange **222** and right cable reel flange **224**, a central hole **216** in right caddy **204**, and an arbor hole **28** in the right carton panel **31**.

In many instances a user or installer will wish to pull the same length of different kinds of cable at the same time, usually to be installed along the same run. FIG. **3** illustrates a first cart or vehicle **300** which makes this very convenient to do. The center or backbone of the cart **300** is made up by a rigid support rod or pipe **302** that can be formed of tubular steel and in any event is strong enough to withstand buckling when supporting a hundred pounds or more of weight. The support rod **302** is threaded through the arbor holes **28**, central caddy holes **216** and reels **202** of each of a plurality of cartons **10**, **304** and **306** (three shown in FIG. **3**). The unit **300** can be formed of containers having different lengths in an axial direction. The length of the axial rod **302** used is preselected to be a little longer than the combined exterior axial length of cartons **10**, **304** and **306**, which are arranged along rod **302** to abut each other and preferably to present front faces or panels **12** in the same direction (although one or more could be reversed). After the user or cable supplier selects cartons **10**, **304**, **306** which are to be combined, they can be taped together with tape **305** or the like to better unify them such that they will not rotate around axis X independently of each other.

A base end **308** of the rod **302** is preferably threaded and is received into a hole **310** in a wheel truck or base **312**. An upstanding panel **314** of the wheel truck **312** is affixed between a left panel **24** of an end carton **10** and a cap **316**, which screws onto the base end **308** of the rod **302**. In an alternative embodiment (not shown), rod **312** may have opposed holes drilled through the sidewall of rod **302**, at right angles to and intersecting rod **302**'s axis, near base end **308**. These holes would receive a cotter pin or clevis of the kind described elsewhere herein. The wheel truck **312**, which conveniently can be fabricated of a single piece of sheet steel, further has at least one horizontal panel **317** (in the illustrated embodiment, there are two such panels **317** and **318**) which receive a lower left corner **323** of the leftmost carton **10**. Separate casters **320**, **322** may be affixed by welding or riveting to lower surfaces of the horizontal panels **317** and **318**. Once carton **10** has been received by horizontal panels **317** and **318**, the three cartons **10**, **304** and **306** will be prevented from rotating around axis X.

A front end **324** of the axial rod **302** is fitted with or formed to have an ell **326** which may be internally threaded. The ell **326** threadably accepts a vertical member **328** of a handle **330** which may have a horizontal member **332** at its top end. After assembly, an installer can move unit **300** from place to place by pulling up on handle **330**. Half of the weight of the unit **300** will be borne by wheel truck **312**. The installer may set down the unit **300** such that axial rod **302** is at about right angles to the direction of cable pull. Casters **320**, which preferably are of the nonturning type (that is, they stay in alignment with axis X), and the forward corner **334** of carton **306** will exhibit enough friction with the floor surface that the unit **300** will resist being drawn in the direction of the cable pull.

FIGS. **4**A-**4**D show variations on how integrated mobile multicontainer units **400**, **402**, **404** and **406** may be assembled. Unit **400** is composed of just two containers **408**, **410**. The containers **408** and **410** may be of different lengths, as would be the case where cable of smaller length or thickness was being stored in container **410** than in container **408**. A relatively short axial support rod **412** is selected for assembling the unit **400**. In contrast, unit **402** (FIG. **4**B) is assembled from four reel containers **414**-**420** and a longer axial support rod **422**. A five-container unit **404** is shown in FIG. **4**C, as composed of containers **424**-**432** and an even longer axial support rod **434**. FIG. **4**D shows a unit **406** in which containers **436**-**440** are assembled together as supported by axial support rod **446**, while additional containers **442**, **444** are mounted on top of containers **436**-**440**.

FIGS. **5**-**8** show a four-wheeled cart **500** to which containers **502**-**520** can be mounted in up to three parallel rows, one each for respective axial support rods **522**, **524** and **526**. The support rods **522**-**526** are preferably parallel to but vertically spaced apart from each other so as to each be coaxial with a respective row of containers through which they are inserted. FIG. **5** shows cart **500** in a use configuration; when not in use it may be collapsed to a storage configuration, as explained in conjunction with FIG. **8**. The cart **500** is built on an elongate rectangular frame **528** which has a bottom plate **530**, left and right side panels or plates **532** and **534** which extend upwardly from the longitudinal edges of bottom panel **530** and which are preferably orthogonal to panel **530**, and front and rear panels **536** and **538** which extend upwardly from the transverse edges of bottom panel **530** and preferably are orthogonal to plates **530**-**534** and parallel to each other. Panels **530**-**538** can be formed from a single blank of sheet steel and together form a shallow box sized to receive the first row of reel containers **502**-**508**. The height of left side panel **532** is chosen to be somewhat less than the height of cable payout slots **22** above the bottom panels of the containers **502**-**508**, such that the cables being withdrawn from slots **22** will not be occluded or abraded by the side panel **532**. The height of right side panel **534** can be preselected to be taller than this, or can be the same height, in case that the installer chooses to face the slots **22** (or even just some of them) the opposite way.

A vertical, elongate, preferably flat front support rod holder **540** can have its lower end **542** affixed as by riveting or welding to front panel **536**. The front support rod holder more preferably is affixed to the front panel **536** by flat-headed studs **543** formed to extend from a front flat surface of holder **540** and keyed slots **545** formed in panel **536** which have top openings sized and shaped to receive therethrough a head of a respective stud **543**, and a slot depending from this opening which accepts only a shaft of the stud **543**. Other user-oper-

able fasteners such as pins or nuts and bolts could alternatively be employed. As assembled to cart **500**, the front support rod holder **540** extends upwardly from the front panel **536** at least beyond the horizontal level of the third and highest support rod **526**. Holes **544**, **546**, **548** are made in support rod holder **540** to be sized and positioned to slidably receive ends of respective ones of the axial support rods **522**, **524**, **526**. The support rods **522-526** are preferably straight and have through-holes drilled through their sidewalls near their ends, so as to received clevis pins (not shown; see FIG. **8**) after insertion of the rods through respective holder holes **544-548**. In an alternative embodiment (not shown); see FIG. **3**) the rods are threaded on the ends, so as to threadably receive female threaded caps after insertion through respective holder holes **544-548**.

Similarly, in a use configuration a vertical elongate rear support rod holder **600** (FIG. **6**) has a lower end **602** affixed to rear plate **538** as by riveting, welding or (preferably) user-operable fasteners such as studs **543** received into respective keyed slots **545**. The rear support rod holder extends upwardly from the rear panel **538** at least beyond the horizontal level of the third support rod **526**. Holes **604**, **606** and **608** are made in support rod holder **600** and are sized and positioned to slidably receive rear ends of the respective ones of the axial support rods **522**, **524** and **526**. Clevis pins (not shown; see FIG. **8**) may be inserted through diametrically opposed holes drilled in the sidewalls of the rods near their ends in order to fasten the rods in place. Alternatively caps (not shown; see representative cap **316** in FIG. **3**) may be threaded onto the (in this instance, threaded) rear ends of the support rods **522-526** so as to secure the reel containers **502-520** between rod holders **540** and **600**.

In a preferred embodiment, the front panel **536** and the rear panel **538** extend upwardly beyond the level of the lowest axial support rod **522**. Holes **551**, **650** are made in the front and rear panels **536**, **538** to slidably receive therethrough the axial support rod **522**. Extending the front and rear panels **536**, **538** upwardly in this manner obviates any transverse deflection of the support rod holders **540**, **600** at this height, and enhances the resistance to such deflection at locations higher up on the support rod holders **540**, **600**. The upward extension of front and rear panels **536**, **538** also permits the formation of holes **551**, **650** therein to receive the lowest support rod **522** therethrough while the cart **500** is in a storage configuration, as will be hereinafter described.

The bottom panel **530** of the cart **500** has affixed thereto, as by riveting or welding, two front casters **550** which turn on their vertical axes, and two rear casters **552** which don't. In one embodiment some or all of the casters **550-552** may be of the type which are equipped with foot-actuated brakes (not shown), so that the cart **500** may be parked in one place.

At the front corner of left panel **532** and front panel **536** there is provided a left socket **554**, which may be joined to left panel **532** and front panel **536** by welding. Similarly, at the front corner of right panel **532** and front panel **536** there is provided a right socket **556**. Sockets **554** and **556** are vertical cylindrical sleeves meant to slidably receive respective left and right legs **558**, **560** of a handle **562**.

As shown in the detail of FIG. **7**, the left and right legs **558**, **560** of the handle **562** can be affixed to respective sockets **554**, **556** by means of cotter or clevis pins **700**, **702**. A shaft of each clevis pin **700**, **702** is inserted into a hole in a respective socket **554** or **556**, a hole in a respective handle leg **558**, **560**, a hole in the opposite wall of handle leg **558** or **560** (which conveniently can be formed of tubular steel), and finally through an inboard hole in a respective socket **554** or **556**. Another, curved leg of each clevis pin **700**, **702** meanwhile fits around the curved external surface of socket **554** or **556**, thereby locking the pin **700** or **702** in place.

FIG. **7** also provides a close-up view of left and right storage holes **704**, **706** which are not used when the cart **500** is loaded with cartons, but which are used to receive ends of support rods **524**, **526** when the cart **500** is being separately transported or stored.

FIG. **8** shows cart **500** in a "knocked down" condition. The support rod holders **540**, **600** are stored on the left and right sides of the cart interior. Keyed storage slots **800** are formed in sides **532**, **534** so as to receive studs **543** of the support rod holders **540**, **600**, affixing them in place in a storage configuration. Support rods **526**, **528** are threaded through storage holes **704**, **706**, and like storage holes in the rear panel **538**, and affixed in place as by means of cotter or clevis pins, so they don't slide out. The legs **558**, **560** of cart handle **562** are removed from respective sockets **554**, **556** and laid into the interior of the cart **500**. The lowest support rod **522** is reattached in the same position that it takes when cartons are mounted to it, but is now used as a handle to carry the cart **500**.

Returning to FIGS. **5** and **6**, cart **500** permits the stacking of containers **502-520** three rows high, and in alternative embodiments (not shown) a fourth or even more rows could be added, as long as the entire cart **500** is not in danger of tipping over. The containers **502-520** have a lessened danger of tipping over when cable is pulled from them than they otherwise would, as during a cable pull the cable is being pulled off of rotating spools **202** internal to the cartons **502-520**. The rotation of spools in the cartons **502-520** around their respective axes relieves most of the tension caused by pulling the cables, and as such the shear force experienced by the whole structure will be less than it otherwise would be. The combination of the cart **500** and the containers **502-520** create a wall or two-dimensional array of reels from which cable may be pulled.

In use, the installer installs one, two or three rows of containers **502-520** on cart **500**, employing one, two or three axial support rods **522-526**. If only one row of containers **502-508** is to be used, the support rod holders **540** and **600** aren't necessary and don't have to be installed. Otherwise the support rod holders **540** and **600** are bolted on or otherwise fastened to the front and rear plates **536** and **538**, preferably in advance of loading a first row of reel containers **502-508** onto the bottom plate **530**. The lowest support rod **522** is then threaded through plate **536**, support rod holder **540**, containers **502-508**, rear plate **538** and rear support rod holder **600**, and is fastened in place by means of threaded end caps (not shown) or clevis pins. Then, a second row of containers **510-514** is installed in a similar manner, using second support rod **524**. If needed, a third row of containers **516-520** is installed using third support rod **526**. Legs **558**, **560** of the handle **562** are then installed in respective sleeves **554** and **556**.

The cart **500** is then rolled to a desired location and is parked (as by setting its caster brakes) such that its long axis (and therefore the axes of the support rods) is at a substantial angle (such as a right angle) to the direction of cable pull. The combined mass of cart **500** and its payload provides a massive anchor against which cable can be pulled out of containers **502-520** through slots **22**.

FIGS. **9-12** depict an embodiment permitting the dispensing of cable from each reel in a vertical stack of containers **900**A, **900**B. Each container **900**A,B is like container **10** (FIG. **1**) in most respects and each such container **900**A, **900**B houses a reel **202**A, **202**B of cable as supported by reel caddies or mounting plates (omitted from FIGS. **9-12** for clarity). Each container **900**A,B has an arbor hole **28**A or **28**B

in each of its side panels and a clear passageway between them, as before. Each container **900**A,B further has a front panel cable dispensing slot **22**.

The containers **900**A,B are different from containers **10** in that each additionally has an elongate top pass-through slot **902**A or **902**B in a top panel **904** thereof, and an elongate bottom pass-through slot **906**A, **906**B in a bottom panel **908** thereof. The top pass-through slot **902**A, **902**B should be positioned in top panel **904** in a way which is similar to the positioning of bottom pass-through slot **906**A, **906**B in bottom panel **908**. This is so a top pass-through slot **902**A in one container **900**A will communicate with a bottom pass-through slot **906**B in the container **900**B immediately on top of it. As in front slots **22**, it is preferred that top and bottom slots **902**A,B, **906**A,B be offset from the middle of the panel and to be parallel to but offset from the vertical plane which the reel axes will tend to occupy. Said another way, a plane containing the centers of all pass-through slots **902-906** in the stack will be parallel to but spaced from the plane containing the reel axes in the stack.

The pass-through slots **902**A,B, **906**A,B permit cables from different reels to exit out the top one of the slots **902**B in common. By way of example, in FIG. **9** a first cable **910** originates from a lower cable reel **202**A. The cable **910** is fed through a pass-through slot **902**A prior to the upper container **900**B being placed all the way onto the lower container **900**A. The cable **910** is fed through the bottom pass-through slot **906**B in the upper container **900**B, and thence out the top pass-through slot **902**B. A cable **912** originates from an upper reel **202**B, and is simply threaded out of the top slot **902**B. The wide extent of the slots **902**A,B, **906**A,B allows multiple cables **910**, **912** (only two such shown here) to be pulled out of the top of the stack with little resistance and with little interference with each other.

FIG. **10** shows a two-wheeled dolly or hand truck **1000** adapted to receive and hold at least one vertical stack of the containers **900**A,B. The hand truck **1000** has a bottom shelf **1002** which will receive most or all of the weight of the containers, wheels **1004**, a left vertical frame member **1006** and a right vertical frame member **1008**, both extending upwardly from the shelf **1002**. The left and right vertical frame members **1006**, **1008** may be terminated at their upper ends by a handle **1010** which may, as shown, join together the vertical frame members **1006**, **1008**.

The hand truck **1000** further includes horizontally disposed cross members **1012**, **1014**, **1016** each of which join together and bridge vertical frame members **1006** and **1008**. The elevations of the cross members **1012**, **1014** and **1016** are chosen to be at about the centers of the first, second and third containers stacked on the shelf **1002**; the containers (such as containers **900**A,B in FIG. **9**) should therefore be of uniform height, even if they can be of different widths. In the center of each elongate horizontal cross member **1012-1016** there is formed a hole **1018**A, **1018**B, **1018**C for the receipt of a respective support rod, as will be described below.

Preferably at the same elevations as horizontal cross members **1012-1016** are left and right side retaining plates **1020**, **1022**. Each side retaining plate **1020** or **1022** is joined to one of the vertical frame members **1006** and **1008**, has a flat and vertical inwardly facing surface, and extends forwardly therefrom in a direction orthogonal to the plane in which cross members **1012-1016** reside. The retaining plates **1020**, **1022** help keep the containers mounted the cart **1000** from sliding off in a transverse direction.

FIG. **11** shows cart **1000** as holding a single stack of the containers **900**A-**900**C. For this use a set of relatively short support rods **1100**, **1102** and **1104** are used to mount the containers **900**A-**900**C to the cart **1000**. First, a container **900**A is placed on shelf **1002**. If vertical dispensing is desired from this stack, a cable **910** from container **900**A is threaded through a top pass-through slot such as **902**A in FIG. **9**, and thence into a bottom slot **906**B in container **900**B. Container **900**B is then stacked on container **900**A. A cable or conductor **912** is threaded through a top pass-through slot **902**B together with cable **910**. Then both cables **910**, **912** are fed through a bottom pass-through slot (not shown; similar to slots **906**A,B) in a third container **900**C. Container **900**C is then placed on top of container **900**B. Cables **910** and **912**, respectively originating from containers **900**A and **900**B, are joined by a further cable or conductor **1106** and all are threaded through a top pass-through slot **902**C.

To firmly secure the containers **900**A-C to the hand truck **1000**, rod **1100** is inserted through arbor hole **28**A, rod **1102** is inserted through arbor hole **28**B and rod **1104** is inserted through arbor hole **28**C. The rods **1100-1104** continue to be inserted through the caddy holes, reel flange holes, and communicating reel passageways to and through the opposing carton sides and into and through respective cross member holes **1018**A, **1018**B and **1018**C. The inserted ends of the rods **1100-1104** may be drilled to receive respective clevis pins (not shown) to prevent their withdrawal. At the other end thereof, each of the rods **1100-1104** has an enlargement **1106** (such as a disk) that is large enough to not be admitted into a respective arbor hole **28**A-C, and which is also large enough to sufficiently distribute some of the weight of the loaded container (which the rod enlargement **1106** may experience if the hand truck **1000** is tipped forwardly) throughout its disk area without tearing or "perforating through" the typically cardboard carton panel which will be pressing against it.

FIG. **12** shows hand truck **1000** as loaded with two stacks of containers **900**A-C and **900**D-F. The reel axis inside of container **900**A should be substantially coaxial with the reel axis inside of container **900**D, and this coaxial pairing should also take place for containers **900**B, **900**E and **900**C, **900**F. This will create a continuous straight passageway for an axial rod **1200**, **1202** or **1204** from a cross member hole **1018**A-C, through all intervening carton walls, caddies, reel flanges and reel passageways, and out an arbor hole **28** located on the remote side of the remoter one **900** D-F (with respect to the cross member) of the two containers. Axial rods **1200-1204**, which are in general similar to axial rods **1100-1104** but longer, can be inserted through respective ones of these continuous horizontal passageways. A remote end of each of the axial rods **1200-1204** will have an enlargement like enlargement **1107** on rods **1100-1104**, and a near end of the axial rods **1200-1204** will be drilled to receive a respective clevis pin **1206** after the near end has been inserted through a respective one of the cross member holes **1018**A-C.

The cables from the reels inside of containers **900**A-C may be fed through a top pass-through slot **902**C, after being threaded through zero, one or two intervening pairs of pass-through slots in the containers **900**A-C, depending on the identity of the reel from which the cable is being paid off. Alternatively, the cables from respective containers **900**A-C may be threaded in parallel out respective front slots **22**A, **22**B, **22**C. Cable from containers **900**D-F may similarly all be drawn through top pass-through slot **902**F, or alternatively through the front slots **22**D, **22**E and **22**F thereof. The way in which cable is drawn from each stack may be the same as the way used for the other stack, or intentionally may be chosen to be different.

The pass-through-slotted containers **900** A-F may also be used with the four-wheeled cart **500**, with cables drawn out of

top pass-through slots in the top row of containers affixed together by top support rod **526**.

In summary, a cable container has been provided in which a reel of cable rotates freely on caddies inside of a carton as cable is being drawn out of an offset elongate slot provided for this purpose. With the aid of an axial support rod threaded through multiple ones of these containers, two or more such containers can be combined into a single mobile cable pulling unit. For larger jobs, a cart is provided by which multiple rows of such containers are secured to the cart by respective axial support rods. A dolly or hand truck is also provided to create one or two stacks of these containers, and pass-through slots may be formed in the stacked containers to permit the pulling of all cables in the stack in a vertical direction out of one top slot.

While illustrated embodiments of the present invention have been described and illustrated in the appended drawings, the present invention is not limited thereto but only by the scope and spirit of the appended claims.

We claim:

1. A system for dispensing wire or cable from reels, comprising:

a plurality of cable reel cartons each containing a reel of wire or cable, each carton having a bottom panel with opposing left and right sides, a left panel extending upwardly from the left side and a right panel extending upwardly from the right side, arbor holes formed in each of the left and right panels and around an axis so that for each carton, the arbor holes are disposed at a single predetermined first distance from an upper surface of the bottom panel, arbor holes formed in each of the left and right panels and around an axis, an outer surface of the right panel being a predetermined length from an outer surface of the left panel, each carton having a front panel parallel to the axis and extending upwardly from the bottom panel and connecting the left and right panels, a cable payout slot formed in the front panel so as to permit the withdrawal of cable from the carton at a substantial angle to the axis;

each reel having an axial passageway therethrough to communicate with the arbor holes;

at least first and second ones of the cable reel cartons positioned side by side such that the arbor holes thereof are aligned on the axis, a first axial rod inserted through the arbor holes and the axial passageways of the cable reels of the first and second ones of the cable reel cartons, the cable reel cartons having respective lengths in the axial direction, a length of the first axial rod preselected to be longer than the sum of the lengths of said least first and second ones of the cable reel cartons so as to define first and second free ends of the axial rod which extend beyond said at least first and second ones of the cable reel cartons; and

a cart frame which is elongate in the axial direction, a plurality of wheels mounted to the cart frame, ones of the wheels being fixed to roll in the axial direction, the cart frame having opposed, axially spaced apart front and rear ends, a first upstanding rod holder affixed to the front end of the frame, a second upstanding rod holder affixed to the rear end of the frame, a first end of the axial rod affixed to the first rod holder, a second end of the first axial rod affixed to the second rod holder, such that the first and second ones of the cable reel cartons through which the first axial rod is inserted are mounted thereby to the cart, an elongate bottom panel of the frame extending between the front end of the frame and the rear end of the frame, bottom panels of said at least first and second cable reel cartons supported by the bottom panel of the frame so as to prevent rotation of said at least first and second cable reel cartons around the axis; such that wire or cable can be withdrawn simultaneously from the first and second ones of the cable reel cartons in a direction which is at a substantial angle to the axis.

2. The system of claim **1**, wherein each of said cable reel cartons comprises

a left caddy disposed in the carton adjacent the left panel and to extend upwardly from an upper surface of the bottom panel, a substantially cylindrical bushing of the left caddy extending inwardly toward the right panel, the bushing formed around an axis which is parallel to the bottom panel and which is disposed at a first distance measured orthogonally from the upper surface of the bottom panel, the bushing being formed substantially at a first radius from the axis;

a right caddy disposed in the carton to be adjacent the right panel and to extend upwardly from the upper surface of the bottom panel, a substantially cylindrical bushing of the right caddy extending inwardly toward the left panel and formed around the axis, the bushing of the right caddy being formed substantially at the first radius from the axis;

the reel having spaced-part left and right flanges, the left flange having a central hole, the right flange having a central hole, the central holes of the left and right flanges each formed around the axis and having a second radius which is greater than said first radius, such that the bushing of the left caddy may be received in the central hole of the left flange and the bushing of the right caddy may be received in the central hole of the right flange, a greatest radius of the left flange and a greatest radius of the right flange being less than said first distance so as to permit the rotation of the reel around the axis inside of the carton;

wherein an inner surface of the left panel is spaced from an inner surface of the right panel by an internal carton length, the left and right caddies each having a general thickness, the bushings of the caddies extending axially inwardly by a second distance beyond the general thickness, the cable reel having a reel length as measured from an outer surface of the left flange to an outer surface of the right flange, the sum of the general thicknesses of the caddies and the reel length being less than the internal carton length, the sum of the general thicknesses of the caddies, the reel length and twice the second distance being greater than the internal carton length.

3. The system of claim **2**, wherein the caddies are formed of plastic.

4. The system of claim **2**, wherein each caddy has a base extending along the upper surface of the bottom panel and at least one spoke extending from the base to the bushing surface.

5. The system of claim **1**, wherein the bottom, front, left and right panels of each carton are formed of corrugated cardboard.

6. The system of claim **1**, wherein the slot in the front panel of each cable reel carton is elongate in an axial direction, a height of the elongated slot above the upper surface of the bottom panel being less than a vertical distance from the upper surface of the bottom panel to an axis passing through the arbor holes of the carton.

7. The system of claim **1**, wherein the first axial rod is inserted through more than two cable reel cartons.

8. The system of claim **1**, and further comprising:

At least third and fourth ones of the cable reel cartons positioned side by side such that the arbor holes and axial cable reel passageways thereof are aligned on a second axis vertically spaced from and parallel to said axis, the second axis vertically spaced from said axis by a distance substantially equal to twice said predetermined first distance, a second axial rod inserted through the arbor holes of the third and fourth ones of the cable reel cartons, a length of the second axial rod inserted through the arbor holes and the axial passageways of the cable reels of the third and fourth ones of the cable reel cartons, a length of the second axial rod preselected to be longer than the sum of the lengths of said at least third and fourth ones of the cable reel cartons so as to define first and second free ends of the second axial rod which extend beyond said at least third and fourth ones of the cable reel cartons.

9. The system of claim **8**, and further comprising at least a fifth cable reel carton, a third axial rod inserted through arbor holes and an axial passageway of a cable reel of the fifth cable reel carton, a first end of the third axial rod affixed to the first rod holder, a second end of the third axial rod affixed to the second rod holder, such that the fifth cable reel carton is affixed by the third axial rod to the cart, the third axial rod being disposed in parallel to the first and second axial rods and vertically spaced from the second axial rod by a distance substantially equal to twice said first predetermined distance.

10. The system of claim **9**, wherein the fifth cable reel carton is one of a plurality of cartons through which the third axial rod is inserted, axial passageways of the last said plurality of cartons being in alignment with each other.

11. The system of claim **10**, wherein the third axial rod is inserted through more than two cable reel cartons.

12. The system of claim **8**, wherein bottoms of the third and fourth cable reel cartons rest on tops of the first and second cable reel cartons.

13. The system of claim **1**, wherein ones of the wheels mounted to the frame of the cart are casters.

14. The system of claim **1**, wherein the lengths of the cable reel cartons may be preselected to be different from each other.

15. The system of claim **1**, wherein the bottom panel of the frame has parallel sides extending between the front and rear ends, an upstanding side panel of the frame extending upwardly from one of the parallel sides of the bottom panel of the frame, each cable payout slot being elongate in an axial direction, a height of the side panel preselected to be less than a height of said cable payout slot, such that cable may be pulled out of the slot without occlusion or abrasion by the side panel of the frame.

* * * * *