US 20200194911A1

(19) United States
(12) Patent Application Publication
Ayzenberg et al.
(10) Pub. No.: US 2020/0194911 A1
(43) Pub. Date: Jun. 18, 2020

(54) **HIGH PERFORMANCE CABLE TERMINATION**

(71) Applicant: **Amphenol Corporation**, Wallingford, CT (US)

(72) Inventors: **Mark M. Ayzenberg**, Hudson, NH (US); **Khwajahussain Gadwal Mohammed**, Nashua, NH (US); **Erdem Matoglu**, Stratham, NH (US)

(73) Assignee: **Amphenol Corporation**, Wallingford, CT (US)

(21) Appl. No.: **16/716,176**

(22) Filed: **Dec. 16, 2019**

Related U.S. Application Data

(60) Provisional application No. 62/780,504, filed on Dec. 17, 2018.

Publication Classification

(51) **Int. Cl.**

H01R 12/53	(2011.01)
H01R 13/6581	(2011.01)
H01R 13/6594	(2011.01)
H01R 13/6471	(2011.01)
H01R 13/6592	(2011.01)
H05K 1/11	(2006.01)

(52) **U.S. Cl.**

CPC ***H01R 12/53*** (2013.01); ***H01R 13/6581*** (2013.01); ***H01R 13/6594*** (2013.01); *H05K 2201/10356* (2013.01); ***H01R 13/6592*** (2013.01); ***H05K 1/117*** (2013.01); ***H01R 13/6471*** (2013.01)

(57) **ABSTRACT**

A cable assembly comprising a connector with a termination that enables high density and high signal integrity. Shields of cables are terminated to a paddle card via a conductive structure attached to a surface of the paddle card. The signal conductors of the cables are terminated to pads on the paddle card that are exposed within openings of the conductive structure. Such a structure creates a ground structure per cable that provides low insertion loss and low crosstalk, even when multiple cables are aligned side by side and terminated in one or more rows. The cables may be drainless, enabling a large number of cables, such as eight cables, to be packed within the width of a paddle card specified in high density standards such as QSFP-DD or OSFP. The cables may nonetheless have large diameter signal conductors, enabling 2.5 or 3 meter assemblies with less than 17 dB insertion loss.

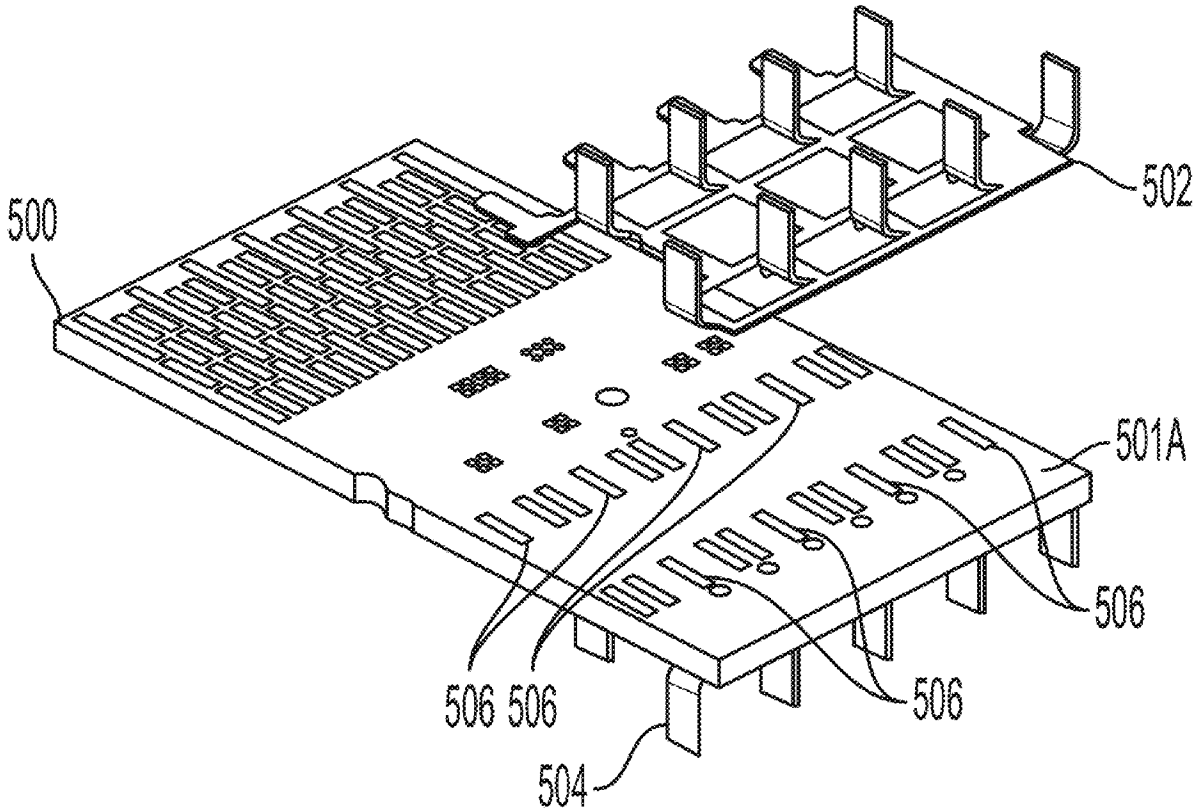

Amphenol Exhibit 1010
Amphenol v. Credo

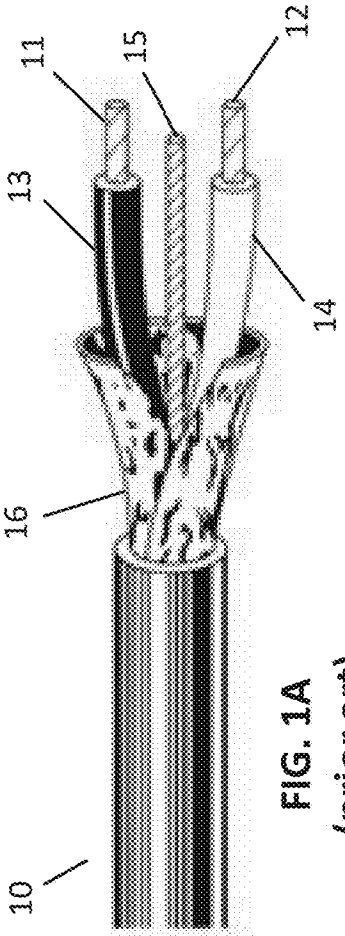

FIG. 1A
(prior art)

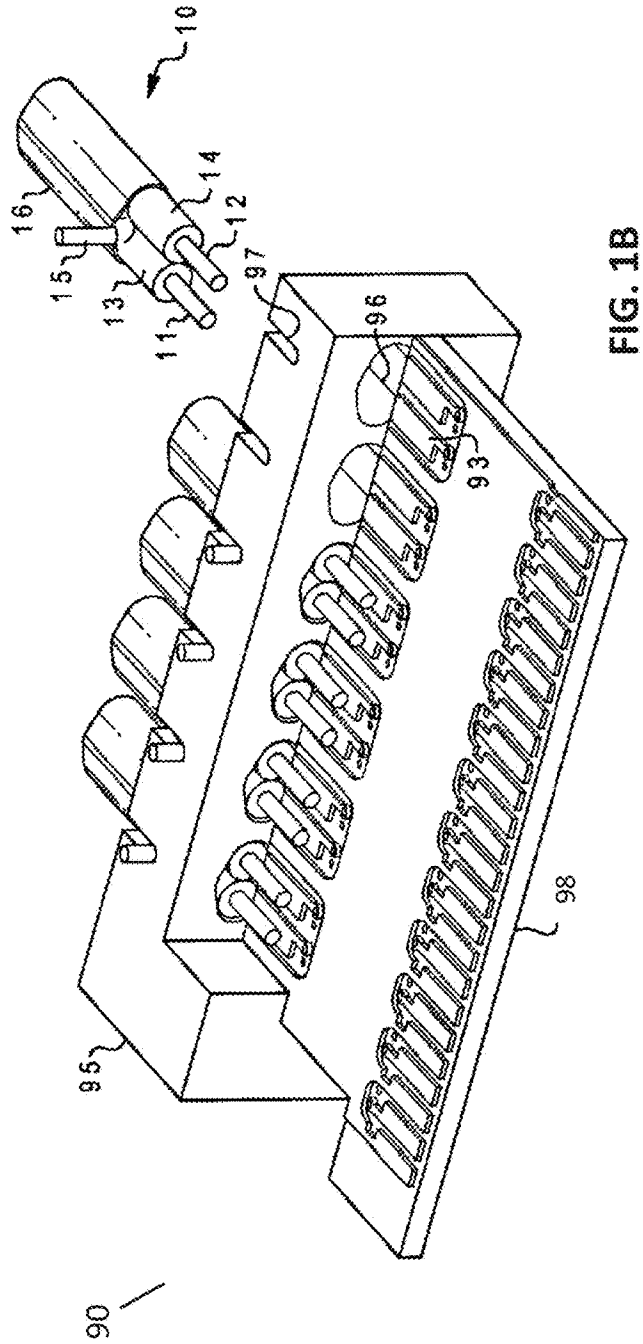

FIG. 1B
(prior art)

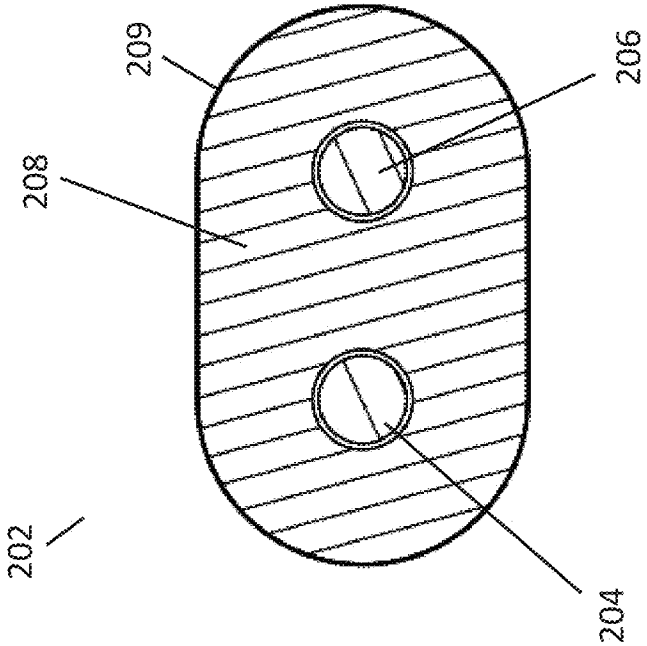

FIG. 2B

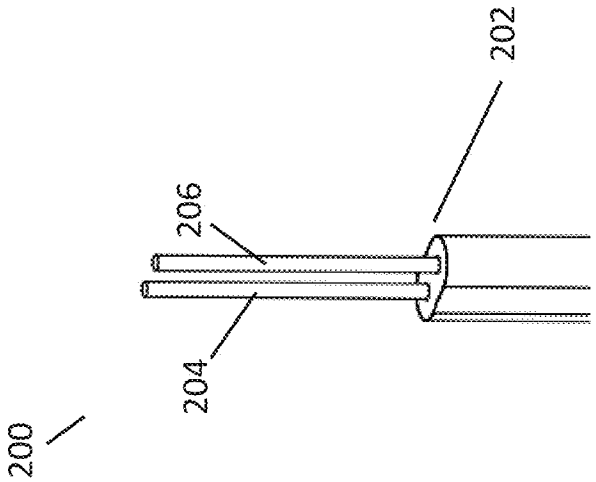

FIG. 2A

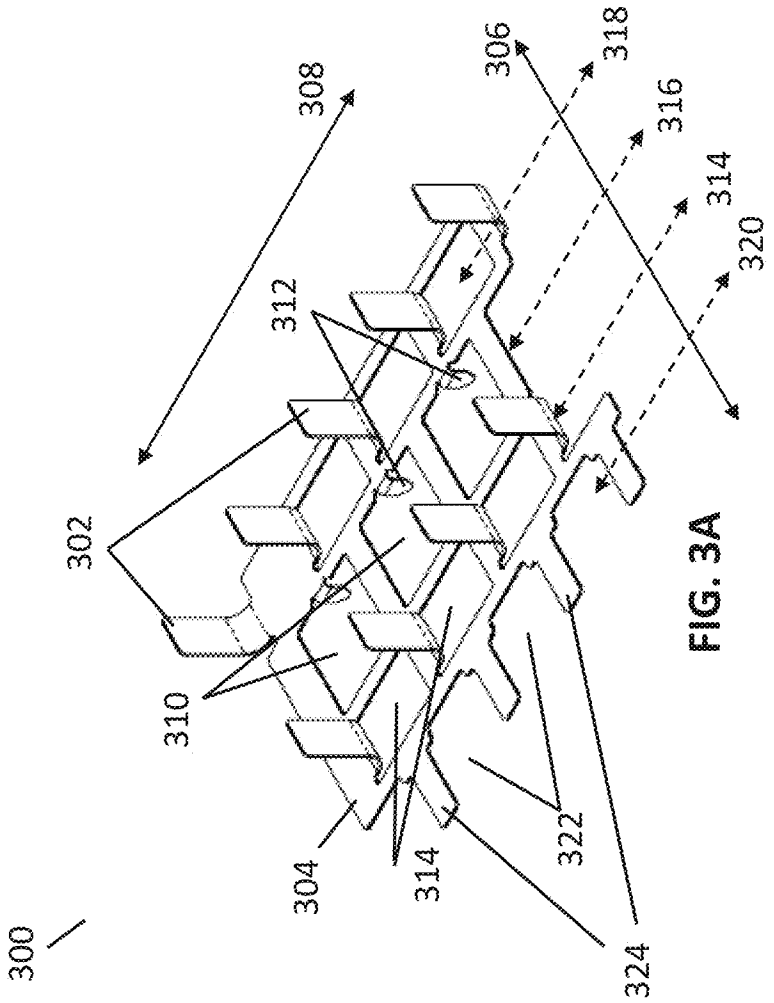

FIG. 3A

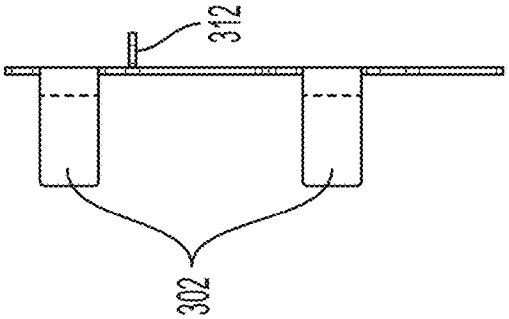

FIG. 3B

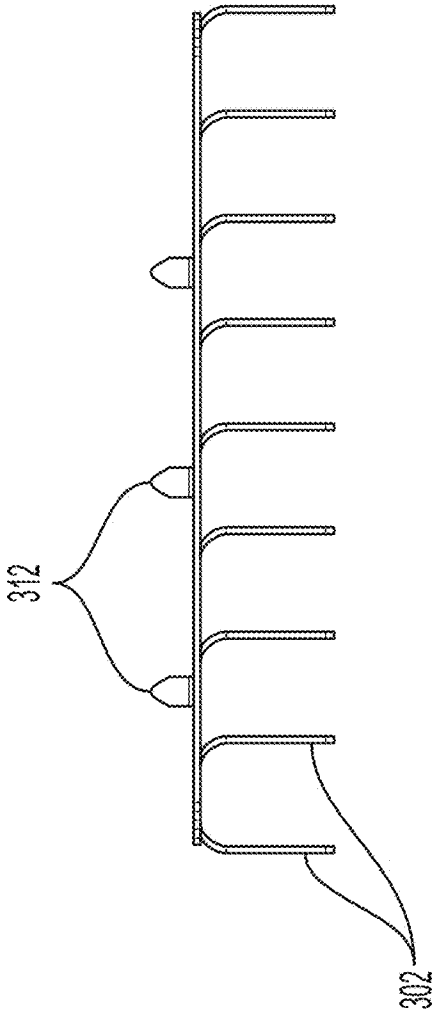

FIG. 3C

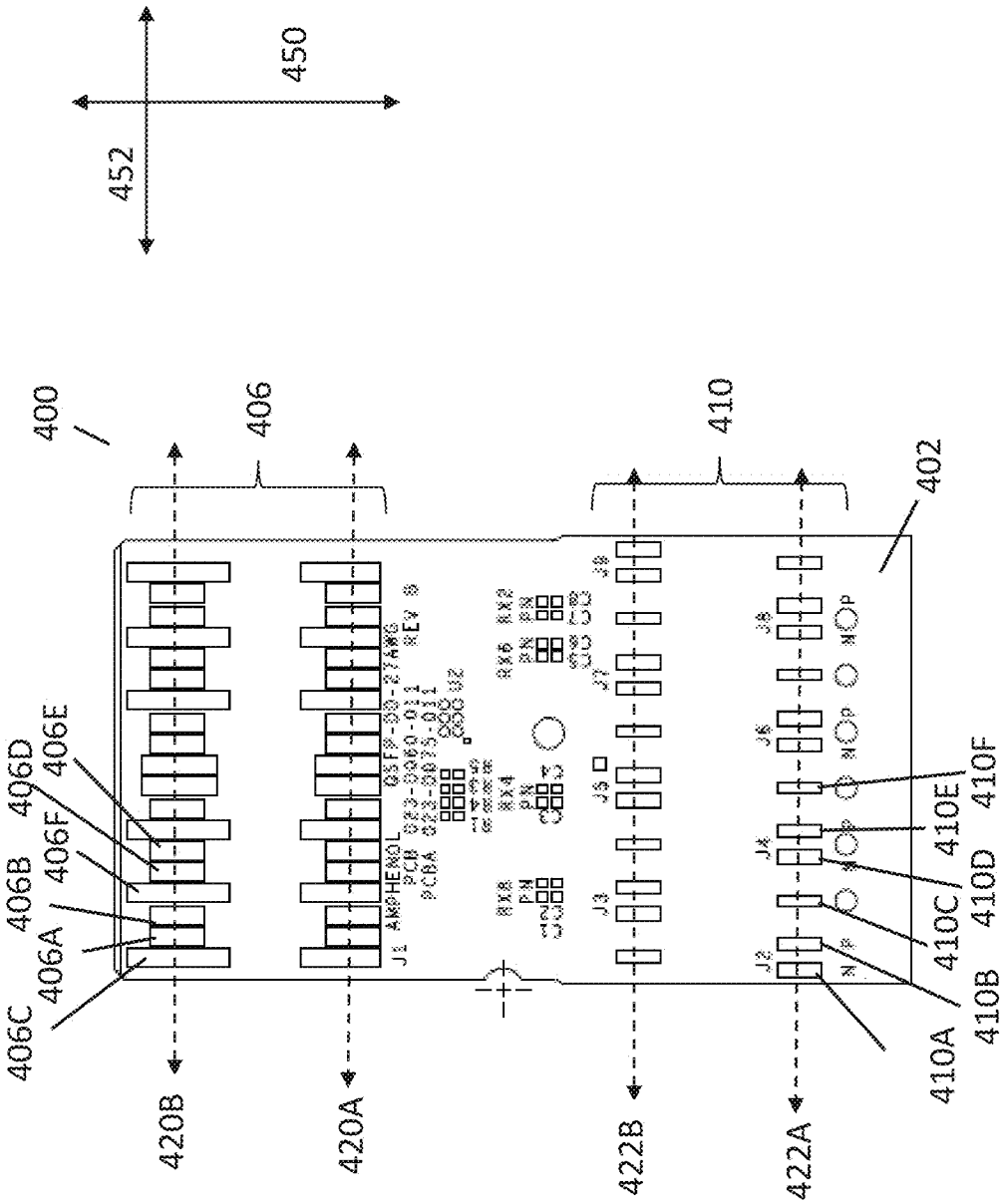
400
406
410
402
450
452
406A
406B
406C
406D
406E
406F
410A
410B
410C
410D
410E
410F
420A
420B
422A
422B

FIG. 4A

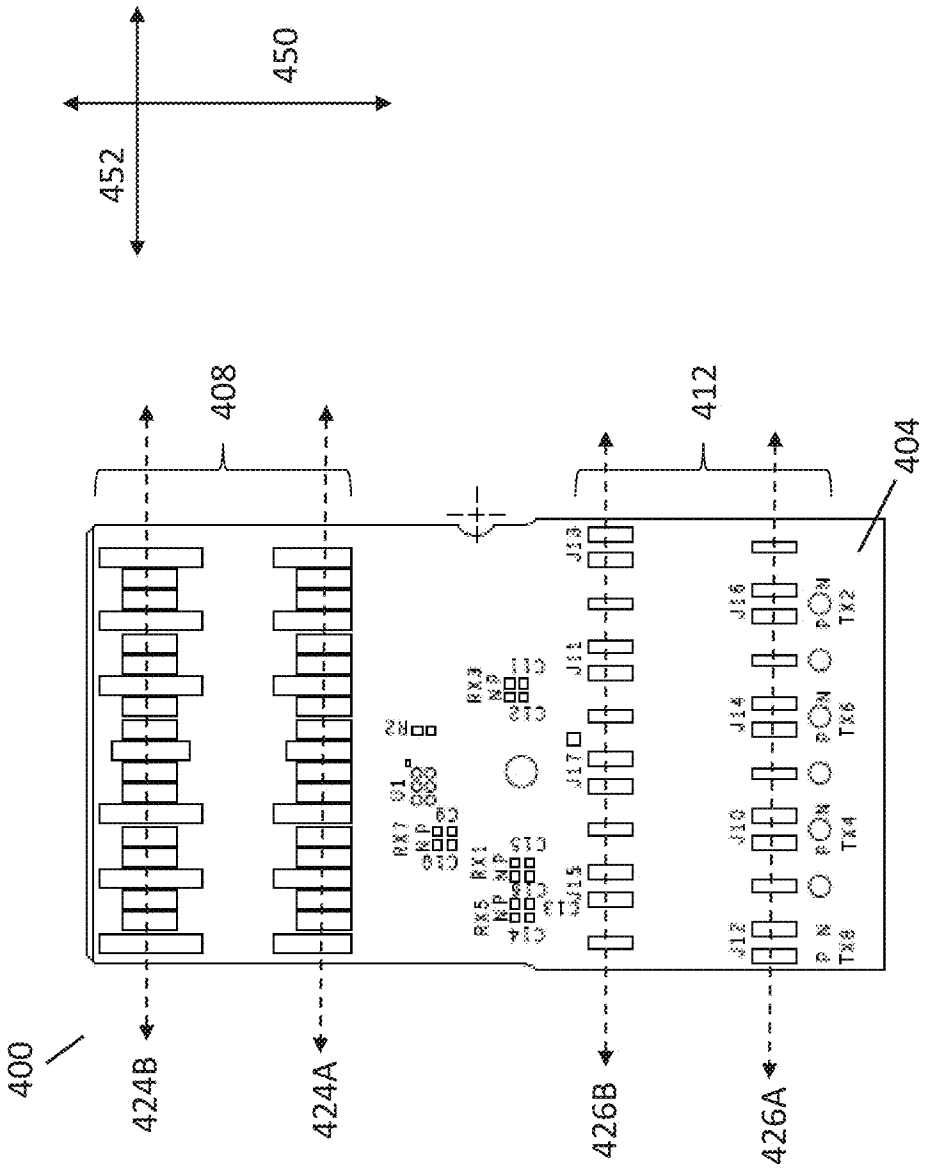

FIG. 4B

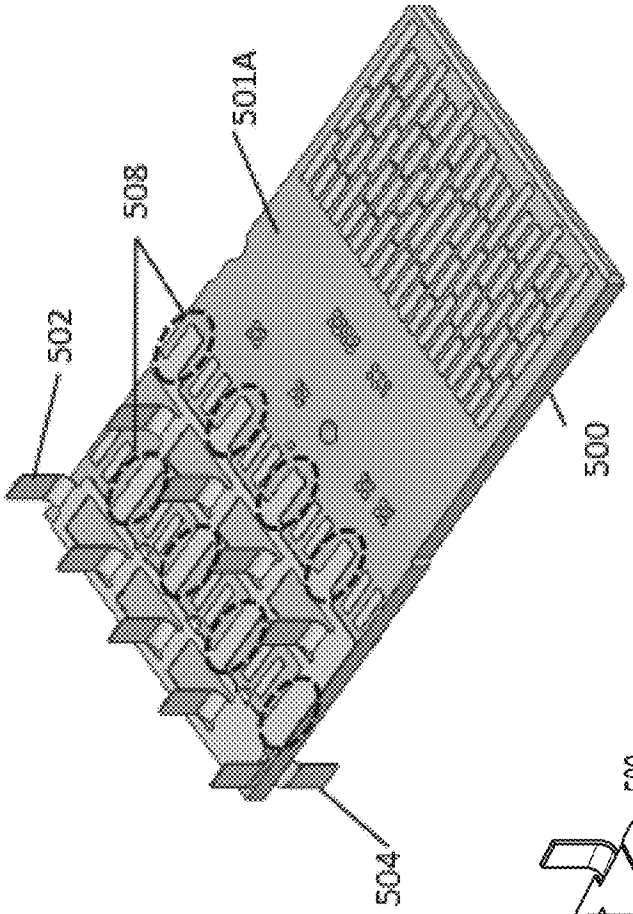

FIG. 5B

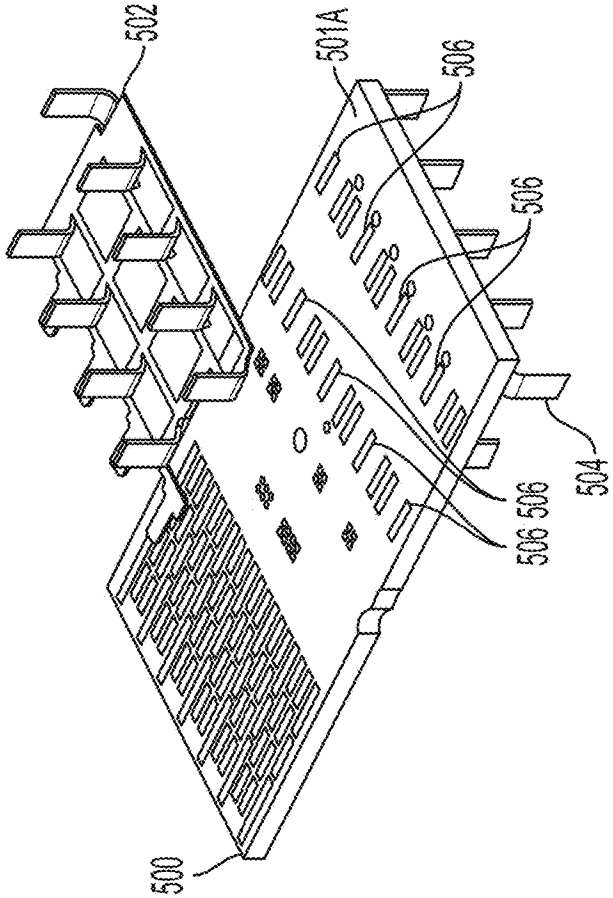

FIG. 5A

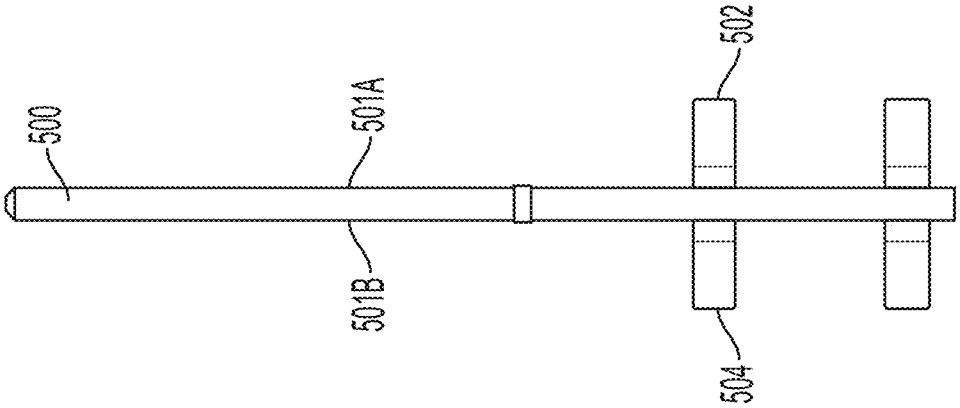

FIG. 5D

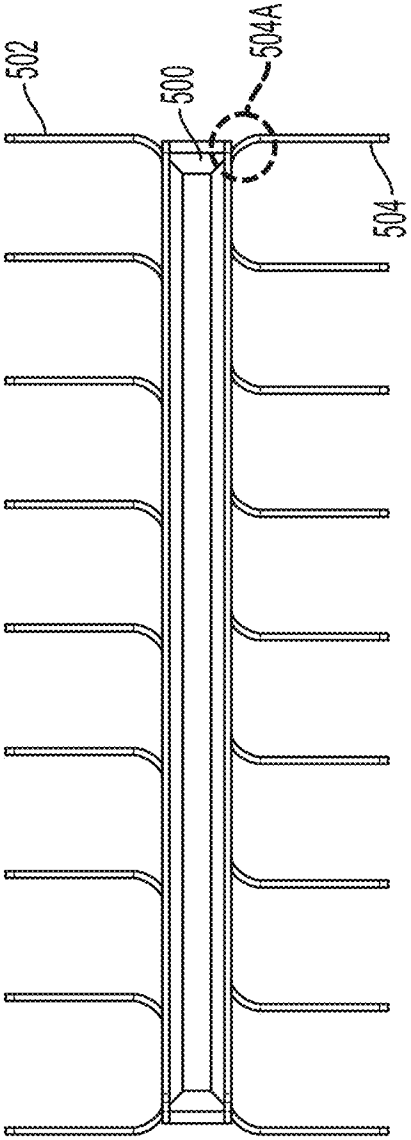

FIG. 5C

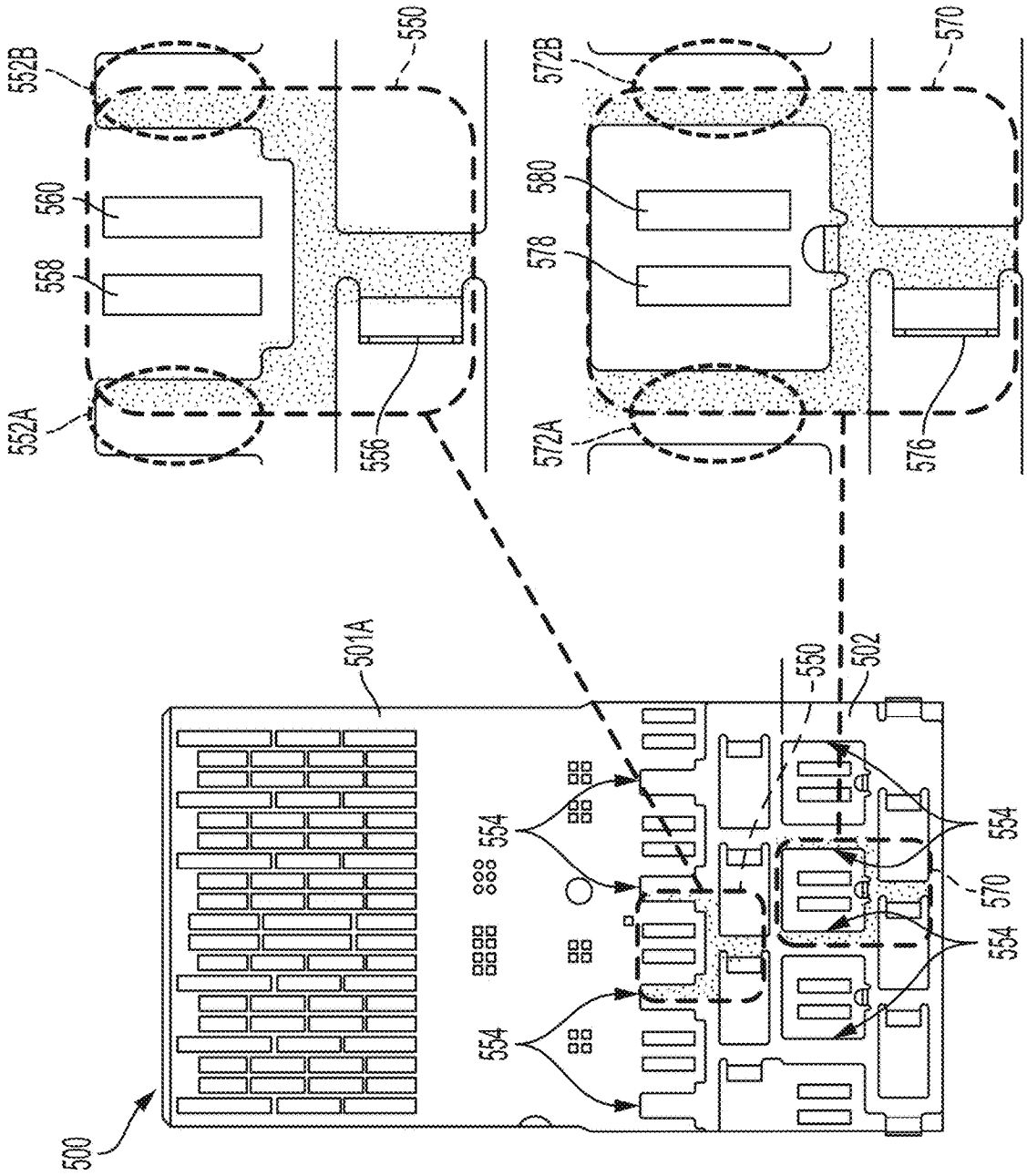
552B
560
558
552A
556
550
572B
580
578
572A
576
570
501A
500
554
554
550
502
554
570
554

FIG. 5E

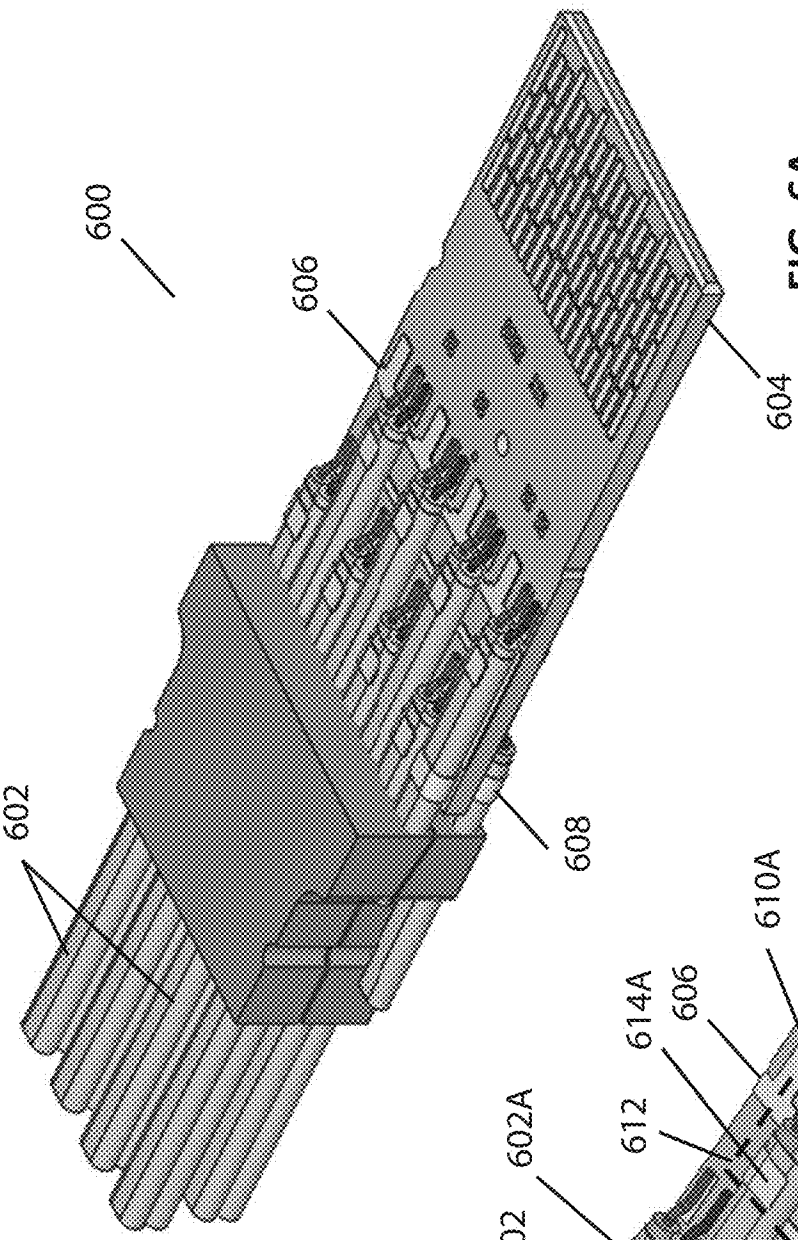

FIG. 6A

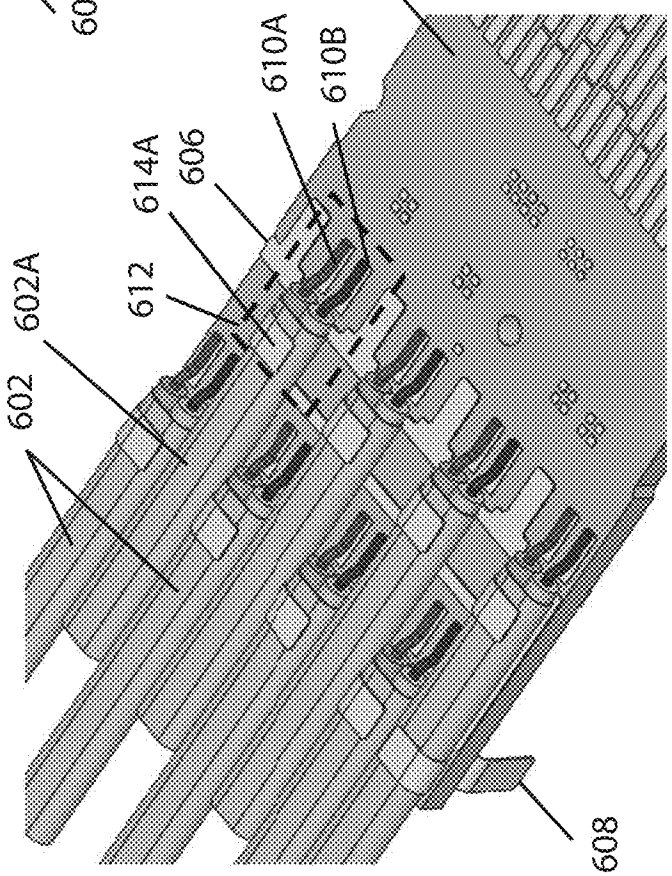

FIG. 6B

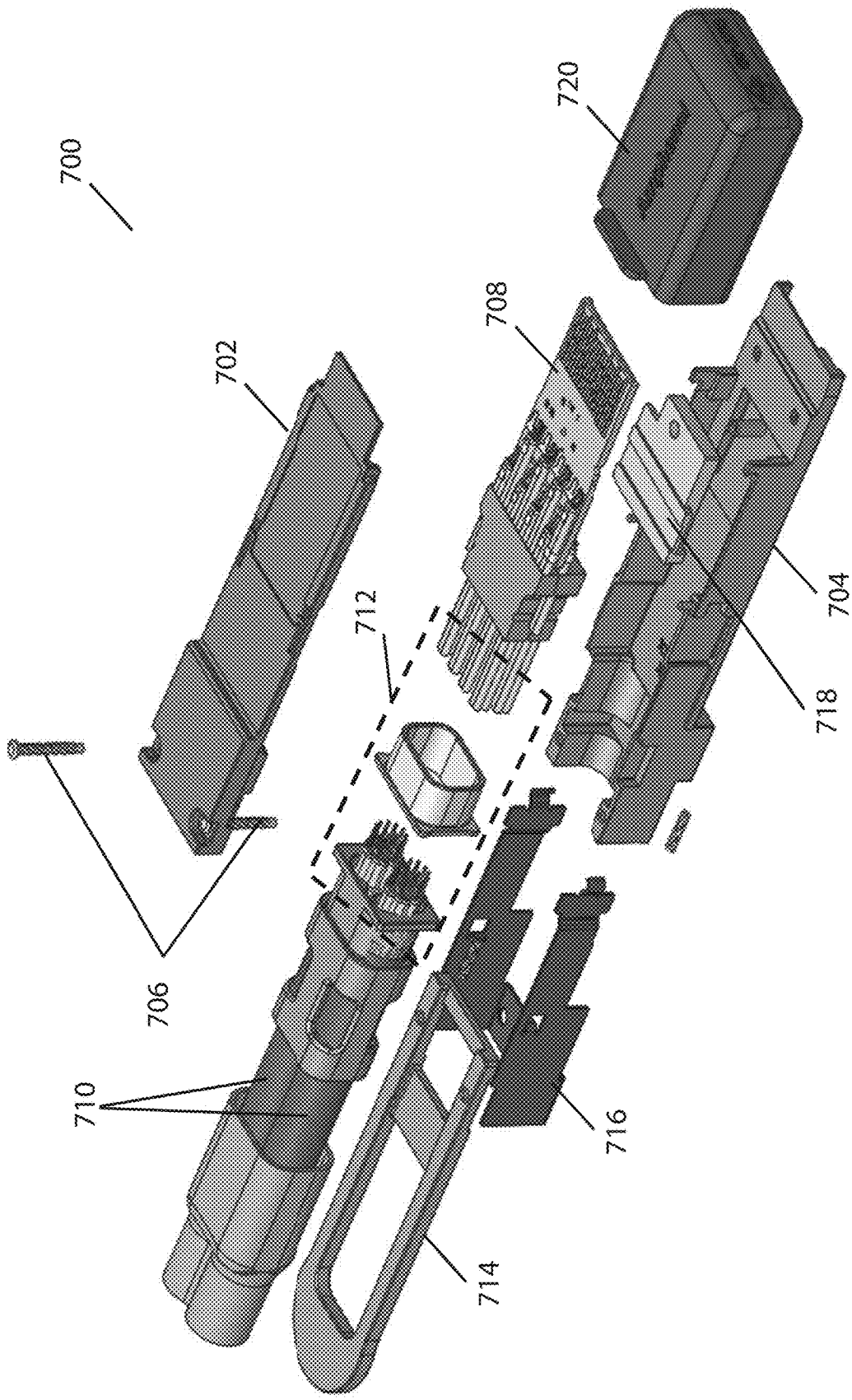

FIG. 7

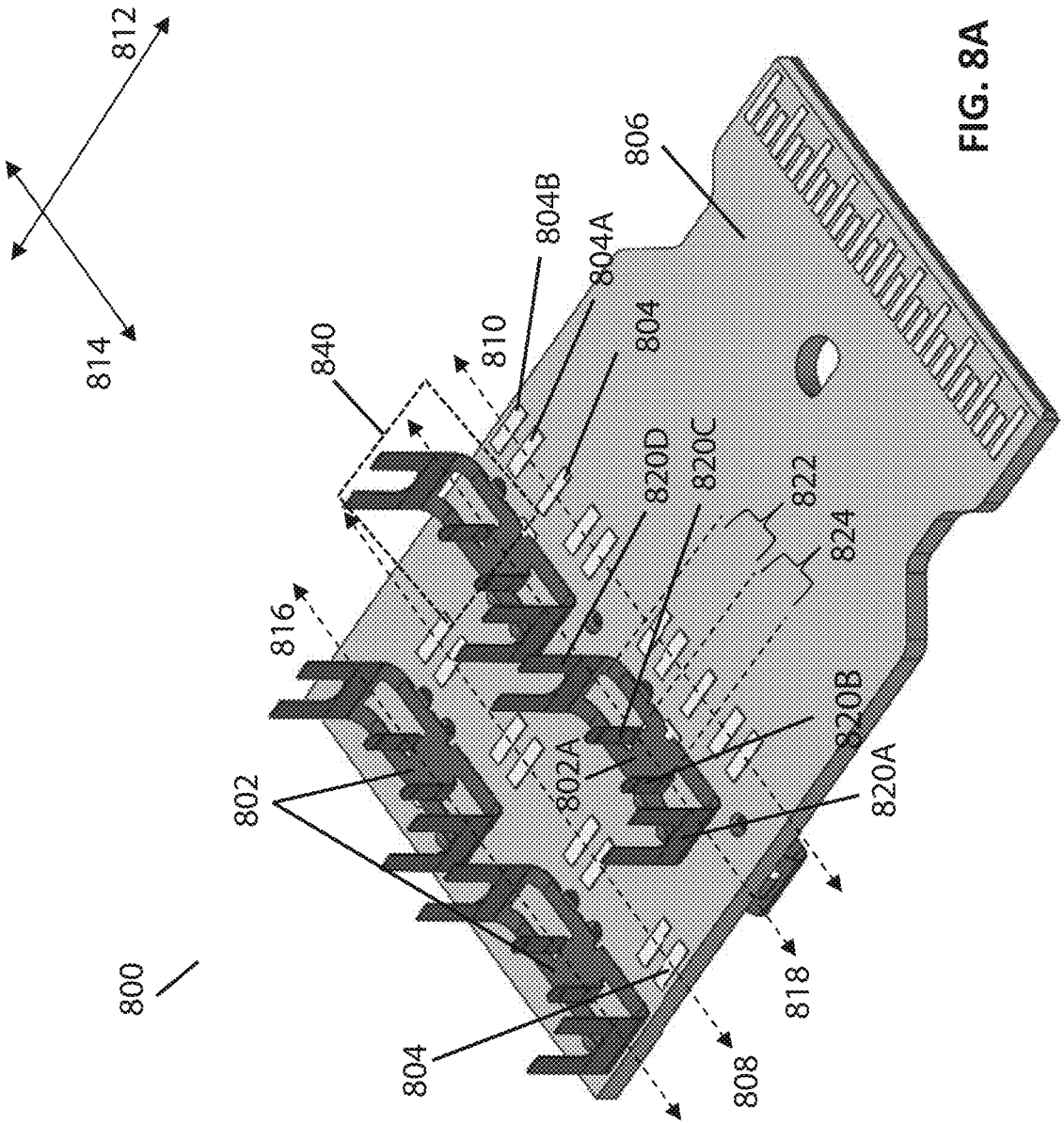
800
802
802A
804
804A
804B
806
808
810
812
814
816
818
820A
820B
820C
820D
822
824
840

FIG. 8A

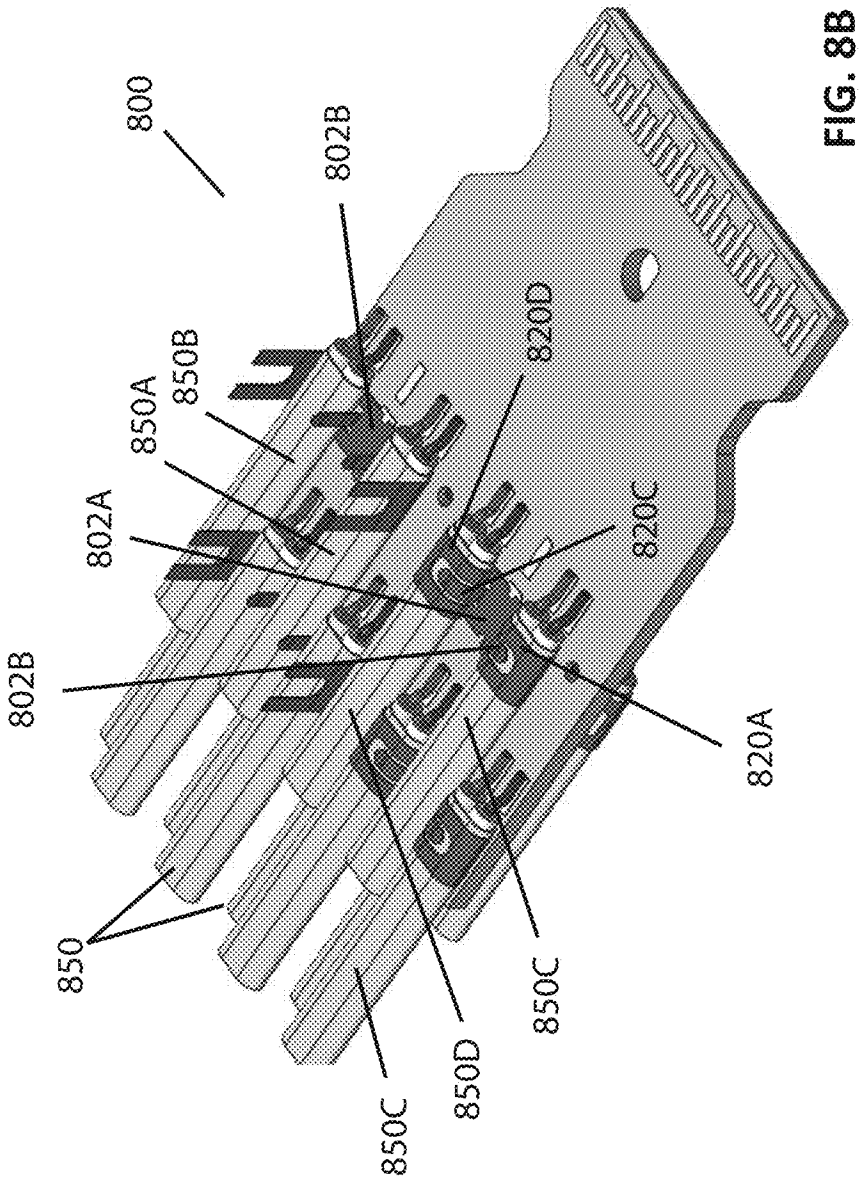
800
802B
850B
850A
802A
802B
850
850C
850D
850C
820D
820C
820A

FIG. 8B

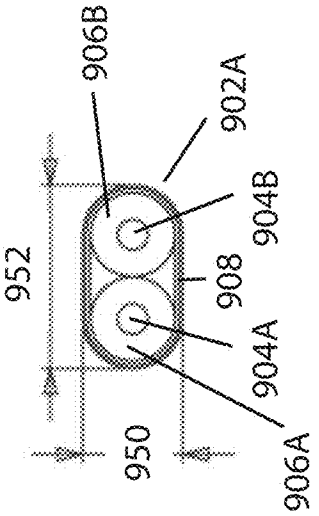
906B
902A
952
904B
908
904A
950
906A

FIG. 9B

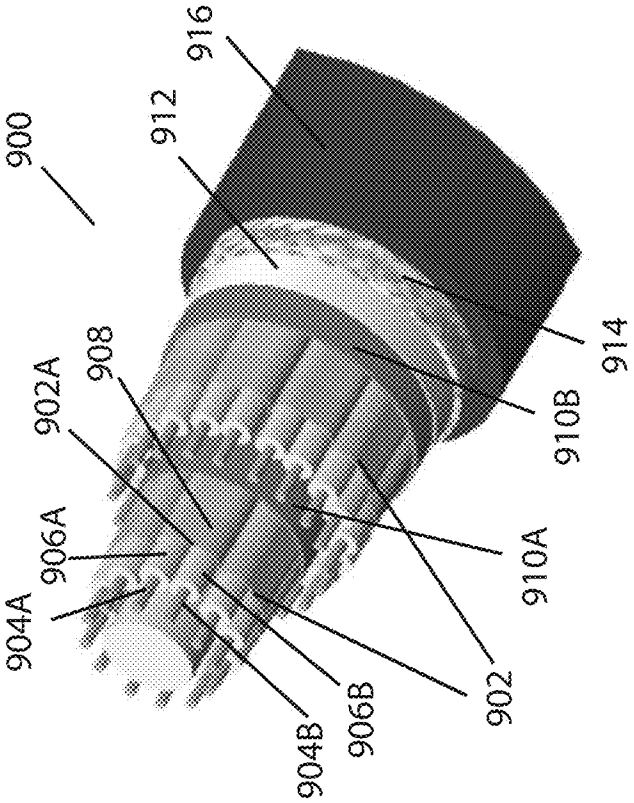
900
916
912
902A
908
906A
904A
914
910B
910A
902
906B
904B

FIG. 9A

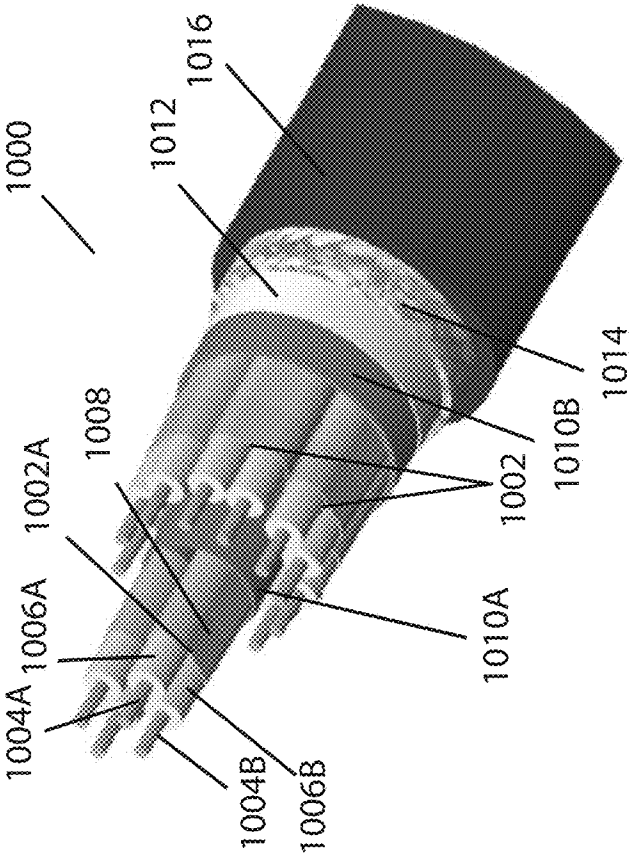

FIG. 10A

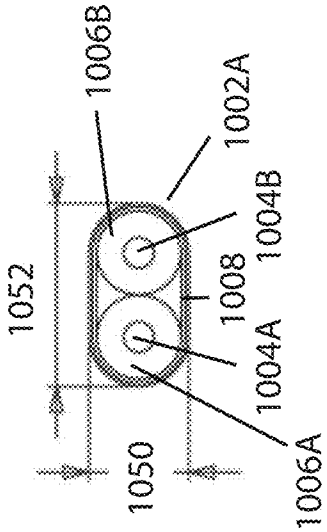

FIG. 10B

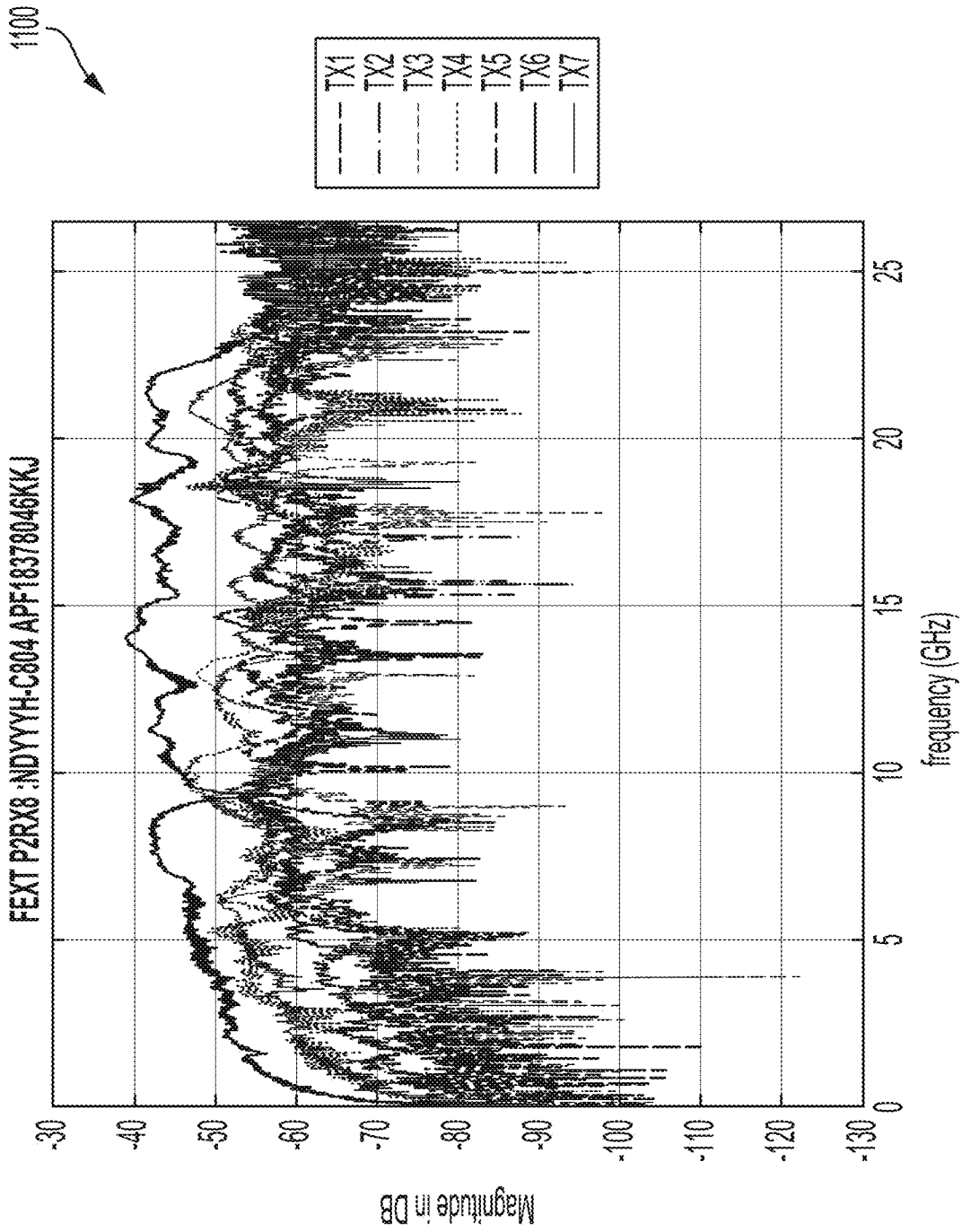
1100
FEXT P2RX8 :NDYYYH-C804 APF18378046KKJ
TX1
TX2
TX3
TX4
TX5
TX6
TX7
-30
-40
-50
-60
-70
-80
-90
-100
-110
-120
-130
Magnitude in DB
0
5
10
15
20
25
frequency (GHz)

FIG. 11

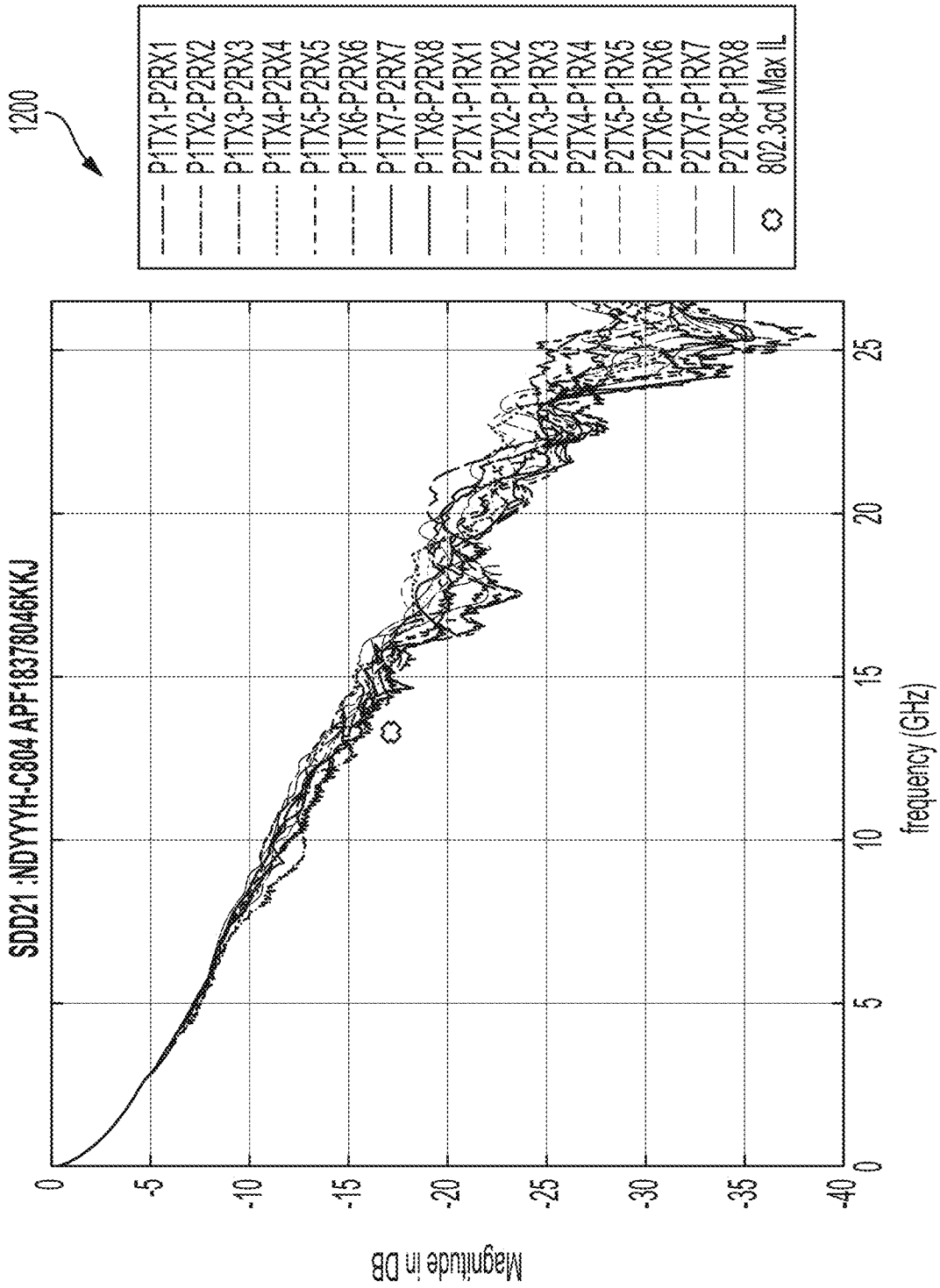
1200
SDD21 :NDYYYH-C804 APF18378046KKJ
P1TX1-P2RX1
P1TX2-P2RX2
P1TX3-P2RX3
P1TX4-P2RX4
P1TX5-P2RX5
P1TX6-P2RX6
P1TX7-P2RX7
P1TX8-P2RX8
P2TX1-P1RX1
P2TX2-P1RX2
P2TX3-P1RX3
P2TX4-P1RX4
P2TX5-P1RX5
P2TX6-P1RX6
P2TX7-P1RX7
P2TX8-P1RX8
802.3cd Max IL
0
-5
-10
-15
-20
-25
-30
-35
-40
Magnitude in DB
0
5
10
15
20
25
frequency (GHz)

FIG. 12

HIGH PERFORMANCE CABLE TERMINATION

CROSS-REFERENCE TO RELATED APPLICATIONS

[0001] This application claims priority to and the benefit under 35 U.S.C. § 119(e) of U.S. Provisional Patent Application Ser. No. 62/780,504, filed on Dec. 17, 2018, entitled "HIGH PERFORMANCE CABLE TERMINATION," which is hereby incorporated herein by reference in its entirety.

BACKGROUND

[0002] The techniques described herein relate generally to electrical cable assemblies used to transmit signals between electronic devices, such as servers, routers and switches.

[0003] Cables are often terminated at their ends with electrical connectors that mate with corresponding connectors on the electronic devices, enabling quick interconnection of the electronic devices.

[0004] A cable provides signal paths with high signal integrity, particularly for high frequency signals, such as those under 28 Gbps using a non-return-to-zero (NRZ) protocol, above 50 Gbps using a pulse amplitude modulation (PAM) protocol, and/or the like. Each cable has one or more signal conductors, which is surrounded by a dielectric material, which in turn is surrounded by a conductive layer. A protective jacket, often made of plastic, may surround these components. Additionally the jacket or other portions of the cable may include fibers or other structures for mechanical support.

[0005] The components of the cable that predominately impact signal propagation, i.e., the signal conductor, the dielectric and conductive layer, are generally uniform over the length of the cable. Non-uniformities on a signal path, such as might be created by changes in shape or material of the components, give rise to changes in impedance or promote mode conversion, which reduce signal integrity, as these effects are manifested as insertion loss, crosstalk or other undesirable effects.

[0006] The signal conductor, dielectric and conductive layer are flexible, giving rise to a desirable property of cables. The flexibility enables uniform cable properties to be maintained even if the cable is routed with many bends, promoting signal transmission with high integrity.

[0007] One type of cable, referred to as a "twinax cable," is constructed to support transmission of a differential signal and has a balanced pair of signal wires, embedded in dielectric material, and encircled by a conductive layer. In addition to uniform dimensions of the signal wires over the length of the cable, the spacing of the wires relative to each other and to the conductive layer is maintained over the length of the cable because those components are positioned by the dielectric. Such a cable may be formed by extruding the dielectric material around the signal wires.

[0008] The conductive layer is usually formed using foil, such as aluminized Mylar, or wire braid wrapped around the surface of the dielectric. The conductive layer influences the characteristic impedance in the cable and provides shielding that reduces crosstalk between signal conductors in twinax cables that may be routed together as a cable bundle. The conductive layer also forms the cable ground reference.

[0009] A twinax cable can also have a drain wire. Unlike a signal wire, which is generally coated with a dielectric to prevent electrical contact with other conductors in the cable, the drain wire may be uncoated so that it contacts the conductive layer at multiple points over the length of the cable. At an end of the cable, where the cable is to be terminated to a connector or other terminating structure, the protective jacket, dielectric and the foil may be removed, leaving portions of the signal wires and the drain wire exposed at the end of the cable. These wires may be attached to a terminating structure, such as a paddle card of a connector. The signal wires may be attached to conductive elements serving as mating contacts in the connector. The drain wire may be attached to a ground conductor in the terminating structure. In this way, any ground return path may be continued from the cable to the terminating structure.

SUMMARY

[0010] According to one aspect of the present application, a paddle card is provided. The paddle card may comprise a surface comprising a plurality of pads on the surface. The paddle card may comprise at least one conductive structure electrically and physically connected to pads of the plurality of pads, wherein the at least one conductive structure comprises a plurality of tabs, each tab extending upward from the surface, and each tab of the plurality of tabs is configured for electrical contact with an exposed shield of an associated cable.

[0011] According to another aspect of the present application, a cable assembly is provided. The cable assembly may comprise a paddle card comprising a surface, wherein the paddle card comprises a first plurality of pads and a second plurality of pads on the surface. The cable assembly may comprise a plurality of cables, wherein each cable of the plurality of cables comprises at least one conductor and a shield foil, wherein conductors of the at least one conductor are electrically and mechanically connected to pads of the first plurality of pads. The cable assembly may comprise at least one conductive structure electrically and physically connected to pads of the second plurality of pads, wherein the at least one conductive structure comprises a plurality of tabs, and each tab of the plurality of tabs at least partially wraps around a cable of the plurality of cables and is electrically connected to the shield foil of the cable.

[0012] The foregoing is a non-limiting summary of the invention, which is defined by the appended claims.

BRIEF DESCRIPTION OF DRAWINGS

[0013] The accompanying drawings are not intended to be drawn to scale. In the drawings, each identical or nearly identical component that is illustrated in various figures is represented by a like numeral. For purposes of clarity, not every component may be labeled in every drawing. In the drawings:

[0014] FIG. **1**A is an isometric view of an electrical cable including a drain wire;

[0015] FIG. **1**B is an isometric view of a connector configured to operate in connection with the electrical cable of FIG. **1**A;

[0016] FIG. **2**A is a view of an end of an exemplary drainless electrical cable;

[0017] FIG. **2**B is a cross sectional view of an exemplary drainless electrical cable;

[0018] FIG. **3**A is an isometric view of an exemplary conductive structure, in accordance with some embodiments;

[0019] FIG. **3**B is a first side view of the exemplary conductive structure of FIG. **3**A;

[0020] FIG. **3**C is a second side view of the exemplary conductive structure of FIG. **3**A;

[0021] FIG. **4**A is a plan view of a surface of an exemplary paddle card;

[0022] FIG. **4**B is a plan view of the opposite side of the exemplary paddle card of FIG. **4**A;

[0023] FIG. **5**A is a partially exploded view of an exemplary paddle card with conductive structures, in accordance with some embodiments;

[0024] FIG. **5**B is an isometric view of the exemplary paddle card with conductive structures, of FIG. **5**A;

[0025] FIG. **5**C is an end view of the exemplary paddle card with conductive structures of FIG. **5**A

[0026] FIG. **5**D is a side view of the exemplary paddle card with conductive structures of FIG. **5**A;

[0027] FIG. **5**E is a top view of the exemplary paddle card with a conductive structure of FIG. **5**A, with two portions broken out and enlarged;

[0028] FIG. **6**A is an isometric view of a portion of a cable assembly, in accordance with some embodiments;

[0029] FIG. **6**B is an isometric view of the portion of the cable assembly of FIG. **6**A where the cables connect to the paddle card and conductive structure, in accordance with some embodiments;

[0030] FIG. **7** is an isometric view of a cable assembly, partially cut away, in accordance with some embodiments;

[0031] FIG. **8**A is an isometric view of an exemplary paddle card with conductive structures, in accordance with some embodiments;

[0032] FIG. **8**B is an isometric view of the exemplary paddle card with conductive structures of FIG. **8**A, with cables;

[0033] FIG. **9**A show a first exemplary cable bundle, according to some embodiments;

[0034] FIG. **9**B shows an exemplary cross-sectional view of a cable of the cable bundle of FIG. **9**A, according to some embodiments;

[0035] FIG. **10**A shows a second exemplary cable bundle, according to some embodiments;

[0036] FIG. **10**B shows an exemplary cross-sectional view of a cable of the cable bundle of FIG. **10**A, according to some embodiments;

[0037] FIG. **11** is a performance plot showing far-end crosstalk for a cable assembly, according to some embodiments; and

[0038] FIG. **12** is a performance plot showing insertion loss for a cable assembly, according to some embodiments.

DETAILED DESCRIPTION

[0039] The inventors have recognized and appreciated structures for providing a high frequency, compact cable assembly. The structures may include a conductive structure, such as one or more straps, which includes a plurality of tabs that are configured for electrical contact with an exposed shield of an associated cable of the high frequency compact cable assembly. The conductive structure may be physically mounted to a surface of a printed circuit board (PCB), such that each tab extends upward from the surface of the PCB. The PCB may be a paddle card of a connector, and may include multiple pads at least partially disposed on the surface, such that at least one conductive structure is electrically and physically connected to some of the pads.

[0040] The conductive structure may be electrically connected to a ground structure within the PCB, providing conductive paths between shields of the cables and the ground structure within the PCB. In some embodiments, the conductive structure may have a plurality of portions, each portion connecting to (a) a ground pad of the ground structure that is associated with a pair of signal pads of the PCB to which a pair of signal conductors are connected, and (b) to the shield of the cable terminated to that pair of signal pads. The portions may be configured such that crosstalk is low where the cables are terminated to the PCB, leading to low crosstalk in the cable assembly. The portion may be integrally formed from the same conductive material and may have, for each high speed cable, an attachment to a ground structure of the printed circuit board. The ground structure of the PCB may include a pad on the surface of the PCB near or adjacent the signal pads to which the cable is terminated. Each portion may provide a return path for common mode signals in a cable. The conductive structure may have openings, exposing the signal pads on the PCB, and facilitating close proximity between the signal conducts and an associated return path.

[0041] In some embodiments, the tabs of the conductive structure may include a first set of tabs and a second set of tabs. The first set of tabs may be in a first row, and the second set of tabs may be in a second row parallel to the first row. In some embodiments, the cable assembly may include a plurality of conductive structures. Each conductive structure may be electrically and physically connected to ground pads of a subset of the pads. The plurality of conductive structures may include one or more U-shaped tabs, one or more single finger tabs at an interior portion of the conductive structure, or both.

[0042] The paddle card of the cable assembly may include signal pads and ground pads on the surface of the PCB. The cable assembly may include a plurality of cables that each includes at least one signal conductor and a shield foil surrounding the signal conductors. The signal conductors may be electrically and mechanically connected to signal pads. The conductive structures may be electrically and mechanically connected to the ground pads, and each tab may at least partially wrap around a cable to electrically connect to the shield foil of the cable.

[0043] The end of the cable may include an exposed portion of the shield foil, which surrounds, at least in part, the at least one conductor. In some embodiments, each cable may include at least two conductors and the shield foil, such as a twinax cable. The cable may have no drain wire. The cables may be electrically and physically mounted to the PCB in different rows along the PCB, so that connections for neighboring cables are staggered along the width of the PCB. One row may include cables used for transmitting signals, and one row may include cables for receiving signals. Cables with a plurality of conductors may be physically and electrically mounted to the PCB, with the conductors for a particular cable mounted side-by-side on the PCB.

[0044] A termination structure as described herein may provide low crosstalk between signal paths, including low

crosstalk between adjacent cable terminations of rows of cable terminations on the paddle card. Such a termination structure may alternatively or additionally provide low crosstalk between transmit and receive signal paths, which may be terminated in different rows on the paddle card. In some embodiments, the far end crosstalk may be less than 35 dB over a frequency range of 1 to 20 GHz. In some embodiments, the far end crosstalk may be less than 40 dB over substantially all of the frequency range, such as more than 90% of that frequency range. Such crosstalk may be achieved even for compact cable assemblies, such as those sufficiently compact to include a paddle card having a width and/or other aspects/dimensions as defined in the OSFP or QSFP-DD standards.

[0045] Alternatively or additionally, cable terminations as described herein may enable low loss cable assemblies. For example, a cable assembly may have cables with a length ranging from 2.5 meters to 3.5 meters, and a signal loss ranging from 15 dB to 20 dB at Nyquist frequency. As a specific example, a cable assembly may exhibit end to end attenuation of less than 17 dB at 13.28 GHz with a cable length of 2.5 meters or in some embodiments 3 meters. Such low insertion loss may be achieved with a drainless cable. One or more conductors of each cable can have a gauge ranging between 34 American Wire Gauge (AWG) to 24 AWG, nonetheless, as a result of the cable termination techniques described herein, these terminations may be sufficiently compact to fit within a paddle card having a width as defined in the OSFP or QSFP-DD standards. Those techniques enable closely spaced terminations and use of drainless cables. As a specific example, an OSFP cable assembly supporting signaling up to 56 Gbps may have cables with 25 AWG signal conductors, a length of, and a nominal impedance of 100 ohms, with 17 dB or less of insertion loss at a 3 meter cable length. As another specific example, a QSFP-DD cable assembly supporting signaling up to 56 Gbps per lane may have cables with 27 AWG signal conductors, and a nominal impedance of 100 ohms, with 17 dB or less of insertion loss at a 3 meter cable length.

[0046] Cable assemblies as described herein may be configured to support signals having any suitable electric bandwidth, such as more than 20 GHz, more than 30 GHz or more than 40 GHz. For an illustrative example, PAM4 signaling for Ethernet can achieve 53.12 Gbps. The baud-rate (signaling rate) is 26.56 GBaud. The communicating devices can be intentionally cut-off at 75% of the 26.56 GBaud signaling rate with low-pass filters (e.g., to ensure a sufficient signal-to-noise ratio). As a result, the effective achievable bandwidth in GHz is 0.75*26.56 Gbaud=19.92 GHz. Cable assemblies as described herein may support that signaling rate in each of multiple channels.

[0047] FIG. **1**A illustrates a conventional electrical cable. Electrical cable **10**, also referred to as "twinax cable", comprises signal wires **11** and **12**, which are covered by dielectric coating **13** and **14** respectively. The signal wires **11** and **12** may be configured to carry a differential signal, in some embodiments. The cable further comprises a third, uncovered wire **15**, referred to as "drain wire". Signal wires **11** and **12** and drain wire **15** are surrounded by conductive layer **16**, which is configured to serve as an electric shield. The drain wire **15** electrically contacts the conductive layer **16** at multiple locations along the cable (not shown), thus maintaining a ground reference with the conductive layer. As illustrated in FIG. **1**A, the enclosing jacket and the conductive layer have been removed from the end of the cable to permit termination.

[0048] FIG. **1**B illustrates a connector **90** configured to terminate one or more cables **10**. Connector **90** comprises a circuit board **98** and grounding portion **95**. Grounding portion **95** includes a plurality of openings **96**, each configured to receive a cable **10**. When a cable **10** is inserted into an opening **96**, signal wires **11** and **12** form electrical contacts with contact portions **93**. Furthermore, grounding portion **95** includes a plurality of slots **97**, each slot being configured to receive therein the drain wire of the corresponding cable **10**. The grounding portion may contact the various drain wires, thus keeping the cables grounded and providing a return path from the paddle card to the wire. While the use of drain wires ensures signal integrity throughout the length of the cable, having to include an additional wire may add weight, may reduce the flexibility of the cable, may take up additional space, and/or the like.

[0049] FIG. **2**A is a view of an exemplary cable end **202** of cable **200**. The cable **200** may comprise a pair of signal conductors **204** and **206**. As shown, the signal conductors **204** and **206** may extend outward at the cable end **202**. Any suitable approach may be used to configure the end **202** of the cable **200** in this way. A known technique for terminating a cable is to strip away, at the end of the cable, components of the cable to expose the signal conductors. In accordance with some embodiments, different components may be stripped away to expose different components of the cable. For example, the jacket, a conductive layer and dielectric may be stripped away at the distal end of the cable to expose signal conductors at the distal end of the cable. In other regions, only the jacket may be removed, exposing the conductive layer.

[0050] FIG. **2**B is a cross sectional view of the cable **200** at the end **202**. As illustrated, signal conductors **204** and **206** may be surrounded by a dielectric material **208**, which may be configured to prevent the signal conductors from contacting one another. Alternatively, or additionally, the signal conductors may be coated with a dielectric material. Signal conductors **204** and **206** may be formed from copper or from a copper alloy, such as copper-zinc, copper-nickel, copper-magnesium, copper-iron, etc. Dielectric material **208** may be enclosed within a conductive layer **209**, which may comprise a foil, such as aluminized Mylar foil, or wire braid wrapped around the surface of the dielectric material. Conductive layer **209** may be configured to provide shielding so as to reduce crosstalk between adjacent signal conductor pairs. As illustrated, cable **200** may be drainless as it does not include drain wires in the illustrated embodiment.

[0051] According to one aspect of the present application, the electrical properties at the termination of the cables (e.g., crosstalk) can be improved using a conductive member providing ground connections between cables and a PCB to which those cables are terminated. As discussed further herein, the conductive member can provide individual ground paths for each cable, which can result in improved electrical properties at the termination (e.g., compared to connectors without conductive members). FIG. **3**A is an isometric view of an exemplary conductive structure **300**, in accordance with some embodiments. FIGS. **3**B and **3**C show a side view and an end view of the exemplary conductive structure **300**, in accordance with some embodiments. The conductive structure **300** includes a surface **304** that extends

along a first direction **306** and a second direction **308**. FIG. **3**B shows the side of the conductive structure **300** when viewing the conductive structure **300** in the second direction **308**. FIG. **3**C shows an end of the conductive structure **300** when viewing the conductive structure **300** in the first direction **306**.

[0052] The conductive structure **300** includes a plurality of tabs **302**, each of which extends upwards from the surface **304** of the conductive structure **300**. In this exemplary embodiment, the tabs **302** extend orthogonal to the surface **304** and include a bent portion where the tab meets the surface **304** of the conductive structure **300**.

[0053] As discussed in conjunction with FIGS. **5**A-**5**B, the conductive structure can be designed so that when the conductive structure is mounted to a PCB, the conductive structure is electrically and physically connected to certain portions of the PCB (e.g., ground pads), while not being in electrical and/or physical connection with other portions of the PCB (e.g., signal pads). To avoid physical contact with such portions, the conductive structure can include openings that extend in directions **306** and **308**. In the example shown in FIG. **3**A, the conductive structure **300** includes a plurality of openings **310** in the surface **304**, which are defined on all sides by the conductive structure **300** such that the conductive structure **300** entirely surrounds the openings **310**. However, it is not a requirement that the openings be completely surrounded. The conductive structure **300** includes a plurality of openings **322** in the surface **304**, which are defined on three sides by the conductive structure **300**, such that the conductive structure **300** partially surrounds each of the openings **322**, including by projections **324** of the conductive structure **300**. While not shown in FIG. **3**A, in some embodiments the conductive structure can entirely surround the openings **322** (e.g., similar to openings **310**).

[0054] As shown in this example, one or more of the openings **310** can include a protrusion **312** that extends downward into a corresponding opening **310**. In some embodiments, the protrusions **312** are used to align the conductive structure **300** onto a PCB, such as by fitting into holes in the PCB. In some embodiments, the protrusions **312** may be soldered to the ground structure of the PCB.

[0055] In some embodiments, the tabs and openings can be formed and/or disposed in rows of the conductive structure **300**. As shown in the exemplary conductive structure **300**, a first set of tabs **302** are in the row indicated by arrow **314**, and second set of tabs **302** are in the row indicated by arrow **318**, with both rows extending along direction **308**. The openings **310** are in the row indicated by arrow **316**, and the openings **322** are in the row indicated by arrow **320**, with both rows also extending along direction **308**. As shown by the arrows **314**, **316**, **318** and **320**, the rows are orthogonal to the direction **306**. As also shown by the arrows **314**, **316**, **318** and **320**, the rows are spaced from each other along the direction **306**.

[0056] The conductive structure can be formed from a sheet of metal. For example, the conductive structure can be stamped from a sheet and then portions into the shape shown in FIGS. **3**A-**3**C from a sheet of metal. The conductive structure **300** includes, for example, a plurality of voids **314** from which a subset of the tabs **302** are stamped. The conductive structure can be made of any type of conductive material, such as stainless steel or other metal.

[0057] As discussed herein, the conductive structure can be used in various applications, such as for standard-based connectors (e.g., for OSFP, QSFP-DD, etc.). The conductive structure can be mounted (e.g., soldered) to a PCB serving as a paddle card in a plug connector prior to connection of the cables, so that the conductive structure sits between the cables and the PCB. The conductive structure can be used to provide individual ground paths to cables, such as cables without drain pads. Some standards specify dimensions of various aspects of the connectors, such as the dimensions of a paddle card, the number, size and location of solder pads, etc. The conductive structures discussed herein can be used to provide individual ground paths to cables that do not have drain wires, which can reduce crosstalk across cables of the connector. Being able to omit drain wires from the cables while still providing sufficient electrical characteristics at the terminations can allow the cables to be thinner, to use a thicker (e.g., lower gauge) wire (e.g., for less loss than thinner wire), and/or both.

[0058] FIG. **4**A is a plan view of a first side **402** of an exemplary paddle card **400**, and FIG. **4**B is a plan view of the opposite side **404** of the exemplary paddle card **400**. The paddle card extends along a first direction **450** and a second direction **452**. The width of the paddle card **4**A (here shown as being in the second direction **452**) may be specified by the associated standard, at least at the mating interface where contact pads **406** are located. For example, in some embodiments, the width may range between 13.25 and 19.75 millimeters, between 19.5 and 29 millimeters, and/or the like. In many commercial implications, the paddle card will have the same width over its entire length.

[0059] Each side **402** and **404** has contact pads **406** and **408** shown in FIGS. **4**A-**4**B. Each side **402** and **404** also has solder pads **410** and **412**. The pads can be implemented in various ways, such as by a layer of metal disposed on the surface of the paddle card **400** over or otherwise connected to a via within the paddle card **400** or as the top of a via within the paddle card **400**.

[0060] The solder pads **410** are arranged along two rows shown by dotted arrows **422**A and **422**B, and the solder pads **412** are similarly arranged along two rows shown by dotted arrows **426**A and **426**B. Like the contact pads **406** and **408** as discussed below, the solder pads **410** and **412** include sets of solder pads. There may be a set of solder pads per cable. FIG. **4**A shows a first set of solder pads J**2**, which includes signal solder pads **410**A and **410**B and ground solder pad **410**C disposed to the right of the signal solder pads **410**A and **410**B. In this exemplary embodiment, the solder pads **410**A, **410**B and **410**C are used to electrically and physically connect to the pair of signal wires (denoted "n" and "p" in the figure) and the ground of an associated transmit cable (e.g., the first transmit cable), respectively. FIG. **4**A also shows a second set of solder pads J**4**, which includes signal solder pads **410**D and **410**E and ground solder pad **410**F disposed to the right of the signal solder pads **410**A and **410**B. In this exemplary embodiment, the solder pads **410**D, **410**E and **410**F are used to electrically and physically connect to the n and p signal wires and the ground of an associated transmit cable (e.g., the third transmit cable), respectively. The ground solder pads and pairs of signal solder pads in each row may alternate. For example, the pair of signal solder pads **410**D and **410**E are disposed between

ground solder pads **410**C and **410**F, and ground solder pad **410**C is disposed between signal solder pad pairs **410**A/**410**B and **410**D/**410**E.

[0061] In some embodiments, paddle card **400** may be constructed such that at least one of the ground solder pads adjacent a pair of signal pads is attached to a portion of the ground structure within the paddle card to which the traces attached to the pair of signal pads are referenced. If there is a common mode signal on the pair of traces, for example, there will be a corresponding return current flow through the ground structure to which those traces are referenced. In a paddle card, for example, ground planes may be interleaved between layers carrying signal traces such that the traces are referenced to an adjacent ground plane, which may be the closest ground plane to the traces.

[0062] The contact pads **406** and **408** are in electrical communication with the solder pads **410** and **412**, respectively, through the interior of the paddle card. For example, a trace within the paddle card connects solder pad **410**A with contact pad **406**A; a second trace within the paddle card connects solder pad **410**B with contact pad **406**B; and a ground plane within the paddle card may connect solder pad **410**C with the solder pad **410**C. As another example, a third trace may connect solder pad **410**D with contact pad **406**D; a fourth trace may connect solder pad **410**E with the contact pad **406**E. The same, or a different ground plane, may connect solder pad **410**F with solder pad **410**F. Thus, like the contact pads **410** and **412**, the contact pads **406** and **408** can be logically grouped into sets of contact pads associated with the cables terminated to the paddle card.

[0063] For example, each set of contact pads in the contact pads **406** may include a pair of signal pads and a ground pad, which facilitate connection of the signals from the associated cable to corresponding contacts of a mating connector. For example, FIG. **4**A shows a first set of contact pads, which includes signal contact pads **406**A and **406**B and ground contact pad **406**C. In the illustrated embodiment, the ground contact pads, such as **406**C, are longer than the signal contact pads, such as contact pads **406**A and **406**B. FIG. **4**A also shows a second set of contact pads, which includes signal contact pads **406**D and **406**E and ground contact pad **406**F. FIG. **4**A and **4**B show other contact pads that are not numbered for simplicity. The contact pads **406** are arranged along two rows shown by dotted arrows **420**A and **420**B, and the contact pads **408** are similarly arranged along two rows shown by dotted arrows **424**A and **424**B. Each row includes a plurality of sets of contact pads.

[0064] The ground contact pads and pairs of signal contact pads in each row may alternate. For example, the pair of signal contact pads **406**A and **406**B are disposed between ground contact pads **406**C and **406**F, and ground contact pad **406**F is disposed between signal pairs **406**A/**406**B and **406**D/**406**E. As shown, there is a space between the contact pads **406** and **408** (e.g., the space between rows **420**A and **420**B in FIG. **4**A). In some configurations, pre-wipe pads may be disposed between the rows of contact pads **406** and **408** or may be disposed between some or all of the contact pads in a row proximate an edge of the paddle card and that edge (e.g., as shown in FIGS. **5**A-**5**B).

[0065] While not shown in FIGS. **4**A-**4**B, active components can be attached to the paddle card **400**. For example, the paddle card **400** can be sized sufficiently such that active components can be attached to the paddle card **400** in the space between the row **420**A of contact pads and the row **422**B of contact pads shown in FIG. **4**A. For example, filters, amplifiers, transceivers, and/or the like are examples of active components that can be attached to the paddle card **400**. For example, in some applications it can be desirable to convert from the communication protocol being used on the cable to a different communication protocol (e.g., to convert between different communication standards). Active components can be included on the paddle card **400** to perform the conversion on the paddle card **400**, such that a different protocol is provided to a mating connector.

[0066] In some embodiments, the conductive structures may be electrically and physically mounted to the solder pads of either or both sides of the paddle card. In particular, as discussed further herein, the conductive structures may be sized for electrical and physical connection (e.g., via soldering) to the ground solder pads of the paddle card. FIG. **5**A is a partially exploded view of an exemplary paddle card **500** with conductive structures **502** and **504**, in accordance with some embodiments. Paddle card **500** may be constructed like paddle card **400**, except with a different configuration of contact pads.

[0067] As shown in this example, the conductive structure **504** is mounted on the bottom side of the paddle card **500**. The conductive structure **502** is electrically and physically connected to the ground solder pads **506** of the top side of the paddle card **500**. FIG. **5**B is an isometric view of the exemplary paddle card **500**, showing the conductive structure **502** electrically and physically connected to the paddle card **500**. Since the conductive structure **502** is connected to the paddle card **500**, the ground solder pads **506** in FIG. **5**A are not visible in FIG. **5**B. FIG. **5**B highlights where the conductive structure **502** is electrically and physically connected to the ground solder pads **506** using dotted areas **508**.

[0068] FIG. **5**C is a first side view of the paddle card, in accordance with some embodiments. FIG. **5**C is a view of the end of the paddle card **500**, when viewing the side of the paddle card **500** in the first direction **450** that is opposite the side at which the conductive structures **502** and **504** are connected to the paddle card **500**. FIG. **5**D is a side view of the paddle card **500**, in accordance with some embodiments. FIG. **5**D is a view along the second direction **452** of the left side of the paddle card. As shown, the tabs **504** extend orthogonal to the surface of the conductive structure, and include a bent portion **504**A where the tab **504** meets the surface of the conductive structure. As shown in FIGS. **5**C and **5**D, the conductive structures **502** and **504** are mounted at locations opposite each other on the respective sides **501**A and **501**B of the paddle card **500**.

[0069] In some circumstances, it may be desirable to control the electrical properties if a cable assembly such as far-end crosstalk. Crosstalk, and other undesirable electrical properties may arise as a result of the manner in which the cables of the assembly are terminated to the paddle card. A mechanical discontinuity necessarily occurs where the cables, including the signal wires and drain wire (or shield) are connected to the paddle card. For example, as discussed in conjunction with FIG. **2**A, in order to connect cables to the paddle card (e.g., at the solder pads), the layers of the cable (e.g., the conductive layer and the dielectric coatings on the signal wires) are removed so that the signal wire terminations can be connected (e.g., soldered) to the paddle card. Such a discontinuity can give rise to one or more effects that impact the integrity with which a signal passes through the cable assembly. For example, the propagating

mode of some of the signal energy carried by a cable may change such that not all of the energy in the signal cable will transition to the paddle card (or vice versa). Some of the energy that does not transition into the paddle card may be radiated, giving rise to crosstalk. Additionally, the mechanical discontinuity can create the potential for reflections of the signal, which can cause further attenuation because the signal energy travels backwards through the signal wires instead of into the paddle card.

[0070] The conductive structure may be configured to provide a cable termination that has a small impact on signal integrity. The conductive structure may include portions that create separate ground paths for each cable (e.g., for each pair of signal wires). The conductive structure may be shaped and positioned to act as the closest ground conductor to a signal conductor in the cable or connector terminating the cable. The conductive structure may be shaped to provide a ground path for each cable or each signal pair. The conductive structure connects to the ground portion of the cable (e.g., the shield of a cable). Moreover, the conductive structure may be shaped and positioned to provide a spacing between signal conductors and the nearest ground in the cable termination that smooths any impedance transition between the signal conductors in the cable and the traces in the paddle card to which those signal conductors are connected. The conductive structure may be shaped and positioned to provide an impedance in the signal path at the termination that approximates the impedance within the signal conductors or within the traces or that transitions between the impedance in the cable and in the paddle card. Alternatively or additionally, the conductive structure may be shaped and positioned relative to the signal path to approximate the spacing between the signal conductors and the nearest ground in the cable.

[0071] Alternatively or additionally, the conductive structures may be shaped and positioned to provide separate ground paths for each signal conductor or pair of signal conductors that approximates the separate ground paths for the signal conductors as exists within a cable. For example, for a twinax cable with no drain wire, the tabs of the conductive structure mechanically and electrically connect to the exposed shields of the cables of the assembly to complete the conducting path from the cable shields to the ground structure of the paddle card. That connection may be made to the portion of the ground structure to which the traces in the paddle card coupled to the signal conductors of the same cable are referenced. The separate ground paths may reduce crosstalk because there is less coupling of ground return paths of the cables that are terminated to the paddle card.

[0072] FIG. **5**E is a top view of the exemplary paddle card **500** with conductive structure **502** mounted to side **501**A, in accordance with some embodiments. Like with FIG. **5**B, since the conductive structure **502** is connected to the paddle card **500**, the ground solder pads are not visible in FIG. **5**B. FIG. **5**E shows where the conductive structure **502** is electrically and physically connected to the ground solder pads **506** using arrows **554** (the dotted areas **508** used in FIG. **5**B are not included in FIG. **5**E for clarity and simplicity). The conductive structure **502** includes a plurality of portions that create separate ground paths for associated signal pads, two of which are shown as portion **550** and portion **570**. Each portion is electrically and physically connected to a ground solder pad that is adjacent an associated pair of signal solder pads. For example, portion **550** is electrically and physically connected to ground solder pads at the portions shown by dotted areas **552**A and **552**B, and in particular the ground pad at area **552**A is associated with the signal pads **558** and **560**. Portion **570** is electrically and physically connected to ground solder pads at the portions shown by dotted areas **572**A and **572**B, and in particular the ground pad at area **572**B is associated with the signal pads **578** and **580**. Each portion also includes a tab that is aligned with the pair of signal pads, which, as is discussed in conjunction with FIGS. **6**A-**6**B, is configured to make electrical contact with an exposed shield of a cable terminated to the respective pair of signal pads. For example, portion **550** includes tab **556** that is aligned with the pair of signal pads **558** and **560**. Portion **570** includes tab **576** that is aligned with the pair of signal pads **578** and **580**. Thus, in some embodiments, each portion can associate a return path from the paddle card to the cable that has its signal conductors electrically and physically connected to the pair of signal pads within the portion. As discussed further herein, when assembled, the tab aligned with the pair of signal pads folds over the shield of the wire to complete the conducting path between the shield of the cable and the ground structure within the paddle card via the portion of the conductive structure.

[0073] FIG. **6**A is an isometric view of a portion of a cable assembly **600**, in accordance with some embodiments. The cable assembly **600** includes a plurality of cables **602** (sixteen cables, in this illustrative example). The cable assembly **600** includes a paddle card **604** with two conductive structures **606** and **608**. FIG. **6**B is an isometric view of the portion of the cable assembly **600** where the cables **602** connect to the paddle card **604** and conductive structure **606**. For each cable, the ends of the signal wires are soldered to respective signal solder pads. For example, for cable **602**A, the end of the first signal wire **610**A is soldered to a first signal solder pad, and the end of the second signal wire **610**B is soldered to a second signal solder pad. The conductive structure **606** also includes a plurality of tabs **614**, each of which is folded onto a shield of a respective cable. For example, tab **614**A is folded onto the exposed shield of the cable **602**A so that the tab is in physical and electrical contact with the shield. The tabs can be bent around the shields of the cables using, for example, a tool configured to sufficiently bend and press each of the tabs into physical and electrical contact with the shield without damaging the cable or conductive member (e.g., without crushing the cable). Pressing the tab in a shape to conform to that of the cable, with shield exposed, may provide adequate coupling between the conductive member and the shield of the cable. In other embodiments, an attachment material may be added, including conductive adhesive or solder.

[0074] As discussed in conjunction with FIG. **5**E, the conductive structure includes a portion for each cable that provides a ground path for each cable. For example, the portion **612** of the conductive structure **606** creates a ground path for the cable **602**A. These ground paths are largely or wholly disjoint, reducing crosstalk between cables. While not being bound by any particular theory of operation, the inventors believe that shaping the conductive structure in this way reduces mode conversion and impedance discontinuities. Ground paths that are largely or wholly disjoint is also believe to reduce crosstalk between cables. The conductive structure can be shaped to allow cables to connect to the paddle cards in different rows (e.g., one row with all

transmit signals, and another row with receive signals). Using multiple rows can also help reduce the effect of crosstalk because cables can be grouped into rows by signal level (e.g., higher transmit signals can be grouped in one row, and lower receive signals can be grouped in another row) such that a further separation can be achieved between cables with different signal levels (e.g., to avoid crosstalk overwhelming lower signal cables). The ground paths through the conductive structure associated with cables in separate rows are completely disjoint, which provides good electrical separation between conductors most likely to generate harmful crosstalk (e.g. crosstalk from cables with higher signal levels in one row that could have a substantial impact on lower level signals carried by conductors in another row).

[0075] FIG. **7** is an isometric view of a cable assembly **700**, in accordance with some embodiments. The cable assembly **700** includes outer portions **702** and **704** of a plug housing, which are fixed to each other using screws **706**. The outer portions **702** and **704** surround the paddle card **708**, which includes the conductive structures and cable terminations, as discussed in conjunction with FIGS. **6**A-**6**B. The cable assembly **700** includes two cable bundles **710**. In region **712** signal wires and other portions of the cables of the cable assembly **700** have been cutaway for illustrative purposes. The cable assembly **700** also includes a tab **714** connected to latch release member **716**, which can be pulled to release latches of a cage into which cable assembly **700** may be inserted to enable removal of the cable assembly **700** from the cage. The cable assembly **700** includes a stabilization portion **718**, which is used to hold the cables relative to paddle card **708** so as to reduce strain on the cable terminations that might be caused by forces on the cable. Stabilization portion **718** may also provide a housing to facilitate mounting of paddle card **708** in the plug housing. The cable assembly **700** also includes a removable cap **720**.

[0076] In some embodiments, connector modules may be attached to cables, creating cable assemblies that may be used to connect electronic devices. Each module may comprise one or more conductive members to terminate one or more cables in the manner described above. The modules may comprise mating contact portions configured to mate with mating contact portions in a mating connector. In the embodiment illustrated, the mating contact portions are rectangular and at the end of the paddle card. The mating contact portions may include signal and ground pads, and may be configured to mate with mating contact portions in a receptacle.

[0077] The plug of cable assembly **700** may mate with a receptacle connector mounted in an electronic device. For example, the receptacle connector may be mounted on a printed circuit board (PCB) in an electronic device. The cable assembly **700** may be configured to connect any suitable electronic device to any other suitable device, such as a first computer to a second computer, a computer to a server, and/or the like. The cable assembly **700**, including the cables of the cable bundles **710**, may have characteristics selected for the types of signals to pass between the connected devices.

[0078] FIG. **8**A is an isometric view of an exemplary paddle card **800** with conductive structures **802**, in accordance with some embodiments. In contrast to the embodiment of FIG. **5**A, for example, in which the conductive structure on each surface of a paddle card was a unitary member, the conductive structure in the embodiment of FIG. **8**A has conductive structures formed from multiple separate members attached to each surface of the paddle card.

[0079] The first side **806** of the paddle card **800** has four conductive structures **802**. While not shown, the opposite side (the bottom side opposite side **806**) also has four conductive structures **802**, in the illustrated embodiment. The paddle card **800** includes solder pads **804**, which are in a first row **808** and a second row **810**. The first row **808** and second row **810** extend along a second direction **814** orthogonal to the first direction **812** and are spaced in the first direction **812**. The conductive structures **802** are electrically and physically connected to the paddle card **800** such that two conductive structures **802** are in a third row **816** and two conductive structures **802** are in a fourth row **818**. The third row **816** and fourth row **818** extend along the second direction **814** and are spaced from each other along the first direction **812**. The conductive structures **802** are electrically and physically connected to the paddle card **800** through respective ground pads in rows **816** and **818**. Alternatively, each conductive structure **802** may be electrically and physically connected to the paddle card **800** through a single ground pad. In some embodiments, each conductive structure **802** is electrically and physically connected to the paddle card **800** through a plurality of ground pads.

[0080] Each conductive structure **802** includes tabs disposed along the row to which the conductive structure **802** is electrically and physically connected. For example, conductive structure **802**A includes four tabs **820**A-D along row **818**. Tabs **820**A and **820**D are each formed at a respective end of the conductive structure **802**A, and are U-shaped. Tabs **820**B and **820**C include single fingers formed at the interior of the conductive structure **802**A. The tabs of the conductive structures **802** extend upwards in a direction orthogonal to the surface of the first side **806**. The tabs of the conductive structures **802** include a width that extends along the first direction **812**.

[0081] Each conductive structure **802** includes a plurality of portions, such as portion **840** (e.g., two portions). Each portion connects to a ground pad of the ground pad structure of the paddle card **800**. Each portion is associated with a pair of signal pads (e.g., signal pads **804**A and **804**B for portion **840**) to which a pair of signal conductors are connected. Each portion is connected to the shield of the cable terminated to that pair of signal pads, including by the finger tab and U-shaped tab of the portion. The portions may be configured such that crosstalk is low where the cables are terminated to the PCB, leading to low crosstalk in the cable assembly.

[0082] FIG. **8**B is an isometric view of the exemplary paddle card **800** with conductive structures **802** and cables **850**. As discussed herein, the tabs of the conductive structures are configured for electrical and physical connection to the shield of a cable. The conductive structures **802** are shown in FIG. **8**B both prior to connection to the conductive shield of the cables as well as after connection to the shield of the cables. For example, conductive structure **802**B is shown prior to connection of its associated tabs to the conductive shields of cables **850**A and **850**B, while conductive structure **802**A is shown with its associated tabs **820**A-**820**D in physical and electrical contact with the conductive shields of cables **850**C and **850**D. As shown for conductive structure **802**A, each pair of neighboring U-shaped tabs and single finger tabs (e.g., the pair of U-shaped tab **820**A and

single finger tab **820**B) are configured for connection to a same cable, such that when the pair of tabs are folded around a cable, the single finger tab is disposed within the U-shaped tab.

[0083] Each of the conductive structures **802** includes a space portion separating the tabs of each pair, such as the space **822** between tabs **820**C and **820**D shown in FIG. **8**A. The space portions separating the tabs of each pair are sized sufficiently wide enough in the second direction **814** to accommodate a cable, as shown in FIG. **8**B (e.g., with the cable **850**D disposed between the tabs **820**C and **820**D). Each of the conductive structures **802** also includes a space portion (e.g., the space portion **822** of conductive structure **802**A in FIG. **8**A) disposed between the two pairs of tabs. The space portion between the pairs of tabs is sized sufficiently wide enough in the second direction **814** to allow a cable to pass there between, depending on the row (e.g., rows **816** or **818**) in which the conductive structure is mounted to the paddle card. For example, as shown in FIGS. **8**A and **8**B, the conductive structures **802** in row **816** include cables that pass through the conductive structure without connecting to the conductive structure, so that the cables can be mounted to the paddle card in parallel, in a manner such that neighboring cables connect to solder pads in different rows (e.g., rows **808** or **810**).

[0084] While not shown in FIGS. **6**A-**8**B, in some embodiments a securing member can be included in the cable assembly to maintain the tabs in electrical and physical communication with the cable shields (e.g., as part of the connector). The securing member can be sized sufficient to maintain the tabs in electrical and physical communication with the cables without damaging the cables and/or tabs. The securing member can be made of a dielectric material, such as a plastic or rubber material.

[0085] Various types of cables and/or cable bundles may be used with the techniques discussed herein. The inventors have discovered techniques that enable using a lower gauge wire, which will have less loss in the cables, while still maintaining the same (if not smaller) cross-sectional area when compared to cables with higher gauge signal conductors. For example, for as the frequency of a signal passing through a cable is increased, the attenuation of that signal may also increase. Thus, while a lower gauge wire may be larger than a higher gauge wire, it can allow for higher frequency applications or longer cable assemblies because the lower gauge wire can provide better attenuation at such frequencies.

[0086] The cable assemblies described herein can be designed to achieve cables of certain lengths that provide certain cable properties (e.g., impedance, frequency operation, loss, etc.) even when the space available for terminating the cables is constrained by standards that lead to paddle cards of limited width. For example, it may be desirable to provide three (3) meter long end-to-end 100 ohm cables with only 17 dB of loss via the use of 25 or 27 AWG signal conductors. The configuration of the cables and/or cable bundle can be designed to achieve such cable properties and such cables may be terminated to a paddle card of limited width using techniques as described herein. In some embodiments, the cables may be constructed without drain wires and the size and type of dielectric material around the signal conductors may be selected to provide cables of a width that may be terminated to a paddle card in accordance with a high density standard. It should be appreciated, however, that the size of the dielectric material cannot be arbitrarily changed to meet mechanical (e.g. size) requirements of a standard because selection of a material size may impact other cable properties, such as impedance. Nonetheless, the inventors have achieved desired size and electrical characteristics of cable assemblies using techniques as described herein.

[0087] FIGS. **9**A-**9**B show a first exemplary cable bundle **900**, according to some embodiments. The cable bundle **900** includes eight cables **902**, each with a respective pair of signal conductors. For example, cable **902**A includes signal conductors **904**A and **904**B. The signal conductors may be made of various conductive materials. For example, the signal conductors may be made of copper, silver, gold, a plated copper (e.g., silver plated copper), a copper alloy (e.g., such as copper-zinc, copper-nickel, copper-magnesium, copper-iron, etc.) and/or the like. The signal conductors may be of various gauges, such as a gauge ranging from approximately 34-27 AWG. For example, for a cable assembly that meets the QSFP-DD standard, the wires may be 34-27 AWG (e.g., where otherwise the signal conductors are often 34-25 AWG, or higher).

[0088] Each signal conductor is surrounded by a dielectric material. For example, the signal conductors **904**A and **904**B of cable **902**A are each surrounded by a dielectric material **906**A and **906**B, respectively. The dielectric material may be made of any dielectric, such as a polymer (e.g., a foamed fluorinated polymer).

[0089] For each cable, the signal conductors and associated dielectrics are surrounded by a conductive foil. For example, the cable **902**A surrounds the signal conductors **904**A, **904**B and associated dielectric materials **906**A, **906**B, with conductive foil **908**. The conductive foil may be made of any conductive material, such as aluminum, an aluminum coated polyester (e.g., aluminized Mylar), a wire braid, and/or the like. The conductive foil may also include an additional layer over the conductive foil, such as a clear polyester layer.

[0090] Various groups of cables and/or layers of cables may be surrounded by a buffer. For example, in the cable bundle **900**, two buffers **910**A and **910**B are included. The buffer may be made out of a tape, such as polyolefin or polyester tape. Each cable bundle may include one or more outer shields. Cable bundle **900** includes an inner shield **912** and an outer shield **914**. The inner shield **912** may be made of a conductive material, such as aluminum, an aluminum coated polyester, or the like. The outer shield **914** may be made of a braided material, such as a copper braid, a tinned copper braid, or the like. The wires used in the braid may be of various gauges, such as 36-40 AWG, such as 38 AWG. The outer jacket **916** may be a protective material, such as PVC, polyester or the like.

[0091] As shown in FIG. **9**B for exemplary cable **902**A, the signal conductors **904**A, **904**B, dielectric material **906**A, **906**B, conductive foil **908** and outer coating (e.g., clear polyester, if present), may be configured to achieve certain dimensions for each cable. The first dimension **950** in the vertical direction may be in the range of 1.25-1.6 millimeters, such as 1.40 millimeters. The second dimension **952** in the horizontal direction may be 2.5-2.7 millimeters, such as 2.62 millimeters. Cables designed as shown in FIG. **9**A-**9**B may achieve, for example, an impedance of 100 ohms and support signals of up to 23 GHz.

[0092] FIGS. **10**A-**10**B show a second exemplary cable bundle **1000**, according to some embodiments. The cable bundle **1000** includes eight cables **1002**, each with a respective pair of signal conductors. Similar to the cables in FIGS. **9**A-**9**B, cable **1002**A includes signal conductors **1004**A and **1004**B, dielectric material **906**A and **906**B, conductive foil **1008**, buffers **1010**A and **1010**B, inner shield **1012** and an outer shield **1014**, and outer jacket **916**. The signal conductors in the exemplary able bundle **1000** may be a gauge of approximately 25-34 AWG, such as 27 AWG.

[0093] As shown in FIG. **10**B for exemplary cable **1002**A, the signal conductors **1004**A, **1004**B, dielectric material **1006**A, **1006**B, conductive foil **1008** and outer coating (e.g., clear polyester, if present), may be configured to achieve certain dimensions for each cable. The first dimension **1050** in the vertical direction may be 1.05-1.25 millimeters, such as 1.17 millimeters. The second dimension **1052** in the horizontal direction may be 2.05-2.25 millimeters, such as 2.16 millimeters. Cables designed as shown in FIG. **10**A-**10**B may achieve, for example, an impedance of 100 ohms and support signals up to 23 GHz.

[0094] The techniques disclosed herein can be used, for example, for data rate applications specified by the IEEE802.3cd 56 Gbps/lane PAM4 Ethernet Standard, which is hereby incorporated by reference herein in its entirety. An external I/O cable assembly, with a test card using conductive structures as discussed herein, was built in compliance with the IEEE802.3cd standard for testing. The test card signal conductors were 27 AWG, and the test card was compliant with QSFP-DD. The test card used two ground clips, one on each side of the paddle card.

[0095] FIG. **11** is a performance plot **1100** showing the far-end crosstalk (FEXT) for the test assembly, according to some embodiments. The performance plot **1100** shows FEXT for the eighth receive line (RX**8**) for side P2 (one of the end of the cable assembly, where P1 refers to the other end of the cable assembly) when each of the first through the seventh transmit lines (TX**1** through TX**7**) are driven. The performance plot **1100** shows plots for TX**1** through TX**7** at a frequency ranging from 0-26.5 GHz. As shown in the plot **1100**, the FEXT of the transmit lines is substantially less than 40 dB over a frequency range of 0-26.5 GHz (e.g., for over 90% of the frequency range), with crosstalk for most of the transmit lines being less than 40 dB over the range. The worst case crosstalk, for TX**1**, exceeds 40 dB by only a few dB (e.g. less than 2) for a small subrange of the frequencies.

[0096] FIG. **12** is a performance plot **1200** showing the differential insertion loss (SDD21), or insertion loss (IL), for the test assembly, according to some embodiments. The performance plot **1200** shows IL for lines **1**-**8** when transmitting from both side P1 to side P2 as well as from side P2 to P1. For example, P1TX1-P2RX1 shows the differential insertion loss from side P1 on TX**1** to the RX end of line TX**1** at side P2 (P2RX1). As another example, P2TX1-P1RX1 represents a transmission from side P2 on TX**1** to side P1, which is the RX end of line TX**1** (P1RX1)). The performance plot **1200** shows traces for each transmission at a frequency range from 0-27 GHz. The performance plot **1200** also shows the 802.3cd Max IL. As shown in plot **1200**, for both transmit and receive signaling, the IL increases as the frequency increases, starting at around 0 and increasing to an IL ranging between approximately 27-36 dB, with one line showing an IL that exceeds that by a small amount (e.g. a few dB) around 25 GHz.

[0097] Crosstalk and IL as shown in FIGS. **11**-**12** reveal a cable assembly well suited for use for high frequency signals, including those in the range of 0-27 GHz, in an assembly with multiple lanes, such as those that meet the OSFP or QSFP-DD standards. Such cable assemblies may, for example, meet the QSFP-DD standard with 27 AWG signal conductors that are 2.5 meters with end to end attenuation of less than 17 dB. As another example, a cable assembly may meet the OSFP standard with 25 AWG signal conductors that are 3.0 meters with end to end attenuation of less than 17 dB.

[0098] Having thus described several aspects of at least one embodiment of this invention, it is to be appreciated that various alterations, modifications, and improvements will readily occur to those skilled in the art.

[0099] For example, embodiments are described that meet the requirements of OSFP and QSFP-DD standards. Techniques as described herein may be applied to cable assemblies that meet other standards or are custom configurations that are not designed for specific standards.

[0100] Similarly, embodiments are described for use with double density configurations in which contact pads on a paddle card are arrayed in two rows. The same techniques may be used in other configurations, including with paddle cards with a single row or more than two rows of contact pads and/or solder pads.

[0101] As another example, a round cable bundle is illustrated. Techniques as described herein may be used with ribbon cables or cable bundles in other configurations. Likewise, cables are described as having two signal conductors that are wrapped with a shield.

[0102] Other cable configurations may be used, such as ribbon cables in which two shielding films are pinched on either side of each of multiple sets of signal conductors.

[0103] Such alterations, modifications, and improvements are intended to be part of this disclosure, and are intended to be within the spirit and scope of the invention. Further, though advantages of the present invention are indicated, it should be appreciated that not every embodiment of the invention will include every described advantage. Some embodiments may not implement any features described as advantageous herein and in some instances. Accordingly, the foregoing description and drawings are by way of example only.

[0104] Various aspects of the present invention may be used alone, in combination, or in a variety of arrangements not specifically discussed in the embodiments described in the foregoing and is therefore not limited in its application to the details and arrangement of components set forth in the foregoing description or illustrated in the drawings. For example, aspects described in one embodiment may be combined in any manner with aspects described in other embodiments.

[0105] Also, the invention may be embodied as a method, of which an example has been provided. The acts performed as part of the method may be ordered in any suitable way. Accordingly, embodiments may be constructed in which acts are performed in an order different than illustrated, which may include performing some acts simultaneously, even though shown as sequential acts in illustrative embodiments.

[0106] Also, circuits and modules depicted and described may be reordered in any order, and signals may be provided to enable reordering accordingly.

[0107] Computer-executable instructions may be in many forms, such as program modules, executed by one or more computers or other devices. Generally, program modules include routines, programs, objects, components, data structures, etc. that perform particular tasks or implement particular abstract data types. Typically, the functionality of the program modules may be combined or distributed as desired in various embodiments.

[0108] Also, data structures may be stored in non-transitory computer-readable storage media in any suitable form. For simplicity of illustration, data structures may be shown to have fields that are related through location in the data structure. Such relationships may likewise be achieved by assigning storage for the fields with locations in a non-transitory computer-readable medium that convey relationship between the fields. However, any suitable mechanism may be used to establish relationships among information in fields of a data structure, including through the use of pointers, tags or other mechanisms that establish relationships among data elements.

[0109] Use of ordinal terms such as "first," "second," "third," etc., in the claims to modify a claim element does not by itself connote any priority, precedence, or order of one claim element over another or the temporal order in which acts of a method are performed, but are used merely as labels to distinguish one claim element having a certain name from another element having a same name (but for use of the ordinal term) to distinguish the claim elements.

[0110] All definitions, as defined and used herein, should be understood to control over dictionary definitions, definitions in documents incorporated by reference, and/or ordinary meanings of the defined terms.

[0111] The indefinite articles "a" and "an," as used herein in the specification and in the claims, unless clearly indicated to the contrary, should be understood to mean "at least one."

[0112] As used herein in the specification and in the claims, the phrase "at least one," in reference to a list of one or more elements, should be understood to mean at least one element selected from any one or more of the elements in the list of elements, but not necessarily including at least one of each and every element specifically listed within the list of elements and not excluding any combinations of elements in the list of elements. This definition also allows that elements may optionally be present other than the elements specifically identified within the list of elements to which the phrase "at least one" refers, whether related or unrelated to those elements specifically identified.

[0113] The phrase "and/or," as used herein in the specification and in the claims, should be understood to mean "either or both" of the elements so conjoined, i.e., elements that are conjunctively present in some cases and disjunctively present in other cases. Multiple elements listed with "and/or" should be construed in the same fashion, i.e., "one or more" of the elements so conjoined. Other elements may optionally be present other than the elements specifically identified by the "and/or" clause, whether related or unrelated to those elements specifically identified. Thus, as a non-limiting example, a reference to "A and/or B", when used in conjunction with open-ended language such as "comprising" can refer, in one embodiment, to A only (optionally including elements other than B); in another embodiment, to B only (optionally including elements other than A); in yet another embodiment, to both A and B (optionally including other elements); etc.

[0114] As used herein in the specification and in the claims, "or" should be understood to have the same meaning as "and/or" as defined above. For example, when separating items in a list, "or" or "and/or" shall be interpreted as being inclusive, i.e., the inclusion of at least one, but also including more than one, of a number or list of elements, and, optionally, additional unlisted items. Only terms clearly indicated to the contrary, such as "only one of" or "exactly one of," or, when used in the claims, "consisting of," will refer to the inclusion of exactly one element of a number or list of elements. In general, the term "or" as used herein shall only be interpreted as indicating exclusive alternatives (i.e. "one or the other but not both") when preceded by terms of exclusivity, such as "either," "one of," "only one of," or "exactly one of." "Consisting essentially of," when used in the claims, shall have its ordinary meaning as used in the field of patent law.

[0115] Also, the phraseology and terminology used herein is for the purpose of description and should not be regarded as limiting. The use of "including," "comprising," or "having," "containing," "involving," and variations thereof herein, is meant to encompass the items listed thereafter and equivalents thereof as well as additional items.

What is claimed is:

1. A paddle card comprising:

a surface comprising a plurality of pads on the surface; and

at least one conductive structure electrically and physically connected to pads of the plurality of pads, wherein:

the at least one conductive structure comprises a plurality of tabs, each tab extending upward from the surface; and

each tab of the plurality of tabs is configured for electrical contact with an exposed shield of an associated cable.

2. The paddle card of claim **1**, wherein:

the plurality of pads comprises pairs of signal pads and ground pads disposed between adjacent pairs of signal pads; and

the at least one conductive structure comprises a plurality of portions, each portion:

being electrically and physically connected to a ground pad of the plurality of pads adjacent a respective pair of signal pads of the plurality of pads; and

comprising a tab of the plurality of tabs aligned with the respective pair of signal pads so as to make electrical contact with an exposed shield of a cable terminated to the respective pair of signal pads.

3. The paddle card of claim **1**, further comprising:

a second surface opposite the first surface comprising a second plurality of pads at least partially disposed on the second surface; and

at least one second conductive structure electrically and mechanically connected to the second plurality of pads.

4. A paddle card comprising:

a surface comprising a plurality of pads on the surface;

a ground structure within the paddle card; and

at least one conductive structure electrically connected to the ground structure, wherein:

the at least one conductive structure comprises a plurality of tabs, each tab extending upward from the surface;

each tab of the plurality of tabs is configured for electrical contact with an exposed shield of an associated cable;

the paddle card comprises a plurality of mating contacts adjacent a first edge, and the mating contacts are elongated in a first direction orthogonal to the first edge; and

the at least one conductive structure extends across the surface in a second direction orthogonal to the first direction of the paddle card, such that the at least one conductive structure is sized to electrically connect to shields of a plurality of cables; and

when aligned in parallel in the first direction and disposed side-by-side in the second direction.

5. The paddle card of claim **1**, wherein:

the paddle card further comprises a plurality of openings in the surface; and

the at least one conductive structure further comprises a plurality of protrusions that extend into corresponding openings in the plurality of openings.

6. The paddle card of claim **1**, wherein:

the paddle card comprises a plurality of contact pads adjacent a first edge, and the pads are elongated in a first direction orthogonal to the first edge;

the plurality of tabs of the at least one conductive structure comprise a first set of tabs and a second set of tabs;

the first set of tabs are in a first row extending along a second direction parallel to the first edge of the paddle card; and

the second set of tabs are oriented along a second row, wherein the second row extends along the first direction and the second row is spaced from the first row in the second direction.

7. The paddle card of claim **6**, wherein the at least one conductive structure further comprises a plurality of openings, wherein each opening of the plurality extends along the surface in the first direction and the second direction.

8. The paddle card of claim **7**, wherein:

the plurality of openings are oriented along a third row extending along the second direction; and

the third row is between the first row and the second row in the first direction.

9. The paddle card of claim **7**, wherein each opening of the plurality of openings surrounds a pad from a second set of pads at least partially disposed on the surface, such that the at least one conductive structure is not in mechanical contact with the second set of pads.

10. The paddle card of claim **7**, wherein:

the plurality of pads are disposed in a first row and a second row spaced from the first row in the first direction, wherein:

the first and second rows extend along the second direction;

the first and second rows are in a second region adjacent a second edge opposite the first edge; and

the first and second rows comprise sets of pads that comprise a pair of signal pads and an associated ground pad adjacent the signal pads; and

the conductive structure is electrically and physically connected to the ground pads of the first and second rows of pads, and each opening of the plurality of openings is shaped to surround a pair of signal pads in the first and second rows of pads on at least three sides.

11. The paddle card of claim **10**, wherein the plurality of openings comprises:

a first plurality of openings disposed along a third row extending along the second direction, wherein the third row is between the first row and the second row; and

a second plurality of openings disposed along a fourth row extending along the second direction, wherein the fourth row is adjacent the second row.

12. The paddle card of claim **6**, wherein the at least one conductive structure further comprises a set of fingers extending along the surface in the second direction.

13. The paddle card of claim **6**, wherein:

the plurality of openings are disposed along a third row extending along the first direction;

the third row is spaced from the first row and the second row in the second direction; and

the third row is located closer to the first edge of the paddle card than the first row and the second row.

14. The paddle card of claim **1**, wherein the at least one conductive structure comprises a plurality of conductive structures, each conductive structure of the plurality of conductive structures electrically and mechanically connected to an associated subset of pads from the plurality of pads.

15. The paddle card of claim **14**, wherein:

the paddle card comprises a plurality of contact pads adjacent a first edge, and the pads are elongated in a first direction orthogonal to the first edge;

each conductive structure of the plurality of conductive structures comprises tabs of the plurality of tabs in a first row, wherein the first row extends along a second direction orthogonal to the first direction.

16. The paddle card of claim **15**, wherein the plurality of tabs of the plurality of conductive structures comprise one or more U-shaped tabs.

17. The paddle card of claim **15**, wherein the plurality of conductive structures comprise one or more tabs at an interior portion of the conductive structure.

18. The paddle card of claim **15**, wherein the plurality of conductive structures are disposed along the first row.

19. The paddle card of claim **15**, further comprising a second plurality of pads, wherein:

the second plurality of pads are oriented along a second row, wherein the second row extends along the first direction;

the second row is spaced from the first row in the mating direction of the paddle card.

20. The paddle card of claim **1**, wherein:

the paddle card comprises a length that extends along a first direction;

the paddle card comprises a first end comprising a first width that extends along a second direction orthogonal to the first direction; and

the paddle card comprises a second end opposite the first end comprising a second width that extends along the second direction;

wherein the first width, the second width, or both, are between 13.25 and 19.75 millimeters.

21-34. (canceled)

* * * * *