This document was developed by the SFF Committee prior to it becoming the SFF TA (Technology Affiliate) TWG (Technical Working Group) of the SNIA (Storage Networking Industry Association) in 2016.

The information below should be used instead of the equivalent herein.

POINTS OF CONTACT: SFF TA TWG Chair Email: sff-chair@snia.org.
LOCATION OF SFF DOCUMENTS: http://www.snia.org/sff/specifications.

Suggestions for improvement of this specification are welcome and should be submitted to http://www.snia.org/feedback.

If you are interested in participating in the activities of the SFF TA TWG, additional information and the membership application can be found at: http://www.snia.org/sff.

Amphenol Exhibit 1025
Amphenol v. Credo

SFF Committee documentation may be purchased in electronic form.
SFF specifications are available at ftp://ftp.seagate.com/sff

SFF Committee

SFF-8436

Specification for

QSFP+ 4X 10 Gb/s Pluggable Transceiver

Rev 4.9 August 31, 2018

Secretariat: SFF Committee

Abstract: This specification defines the electrical (copper), the optical and the mechanical characteristics of the pluggable Quad SFP+ Module/direct attach cable plug and connector.

This document provides a common specification for systems manufacturers, system integrators, and suppliers of drives. This is an internal working document of the SFF Committee, an industry ad hoc group. This specification is intended to supersede INF-8438 by adding support for 10 Gb/s data rates and updates to the mechanical specification

This specification is made available for public review, and written comments are solicited from readers. Comments received by the members will be considered for inclusion in future revisions of this specification.

Support: This specification is supported by the identified member companies of the SFF Committee.

POINTS OF CONTACT:

Tom Palkert
Technical Editor
Luxtera
2320 Camino Vida Roble
Carlsbad CA 92011
Ph: 952-200-8542
tpalkert at luxtera dot com

I. Dal Allan
Chairman
SFF Committee
14426 Black Walnut Court
Saratoga, CA 95070
Ph: 408-867-6630
endlcom at acm dot org

EXPRESSION OF SUPPORT BY MANUFACTURERS

The following member companies of the SFF Committee voted in favor of this industry specification.

Amphenol
Cinch
EMC
Emulex
ENDL
ETRI
FCI
Finisar
Hewlett Packard
HGST
JDS Uniphase
Lotes Tech
Luxtera
Mellanox
Molex
NetApp
NetLogic uSyst
Oclaro
Panduit
Sumitomo
Sun Microsystems
TE Connectivity
Volex

The following member companies of the SFF Committee voted against this industry specification.

Avago
QLogic

The following member companies of the SFF Committee voted to abstain on this industry specification.

Dell Computer
Foxconn
Intel
LSI
Luxshare-ICT
Sandisk
Seagate
Toshiba
Xyratex

The user's attention is called to the possibility that implementation to this Specification may require use of an invention covered by patent rights. By distribution of this specification, no position is taken with respect to the validity of a claim or claims or of any patent rights in connection therewith. Members of the SFF Committee which advise that a patent exists are required to provide a statement of willingness to grant a license under these rights on reasonable and non-discriminatory terms and conditions to applicants desiring to obtain such a license.

Change History:

Changes from Revision 3.5 to 3.6:

Section 1.1: Added descriptions for clauses 4 thru 7

Section 3:
Table 1 and 2: Added X to 10GFC column to match the 10GBE column.
Changed 'The overall package dimension shall conform to the indicated dimensions and tolerances and the mounting features.' to: The overall package dimension shall conform to the indicated dimensions and tolerances indicated in clause 5. The mounting features...
Changed from 'The electrical and optical specifications shall be compatible with….'
to 'The electrical and optical specifications may be compatible with …..'
Section 3 page 10 line 19: Add: '"For speeds above 6Gb/s the compliance board methodology of IEEE802.3ba, FC-PI4 and SFF8431 should be used. Measurements taken with QSFP+ compliance boards should be corrected for any difference between the loss of these compliance boards and the loss of the compliance boards specified in the standard.'

Section 4:
4.1.1.2: changed 'post' to 'asserting "low"'
4.1.1.5: Added the following text: 'The INTL pin is de-asserted "High" when byte 2 bit 0 (Data Not Ready)is read unless a flag is set (see 7.6.1.2).'
4.1.3.1: Changed 'Clause 6.6.5.2' to 'Clause 7.6.5.2'
4.1.3.2: Changed " For operation above 6 Gb/s see the appropriate specification for required voltage swings. Note: for 10G Ethernet reference SFF-8431. For 40G Ethernet operation reference 802.3ba." to "For operation above 6 GBd see the appropriate specification, e.g. 802.3ba, FC-PI-4, FC-PI-5 or the InfiniBand specification. For 10G Ethernet, see SFF-8431."
Deleted '(absolute value)' after '1600mv'.
4.2.1: Change "… filtering shown in Figure 4", to "… filtering equivalent to that shown in Figure 4".
4.2.1: In Table 6, added a reference to Figure 5 in the Condition column for Sustained peak current at hot plug ... & Module Maximum Current Inrush....
4.2.1: At line 9, add a sentence "It is recommended that the 22 uF capacitors each have an equivalent series resistance of 0.22 ohm."

Section 5:
5.1: Updated the two bottom images to show the same keying structure as the two top images (modules).
5.3: Enlarged the scale of Fig. 8 to make it easier to read the dimensions and notes.
Figure 8: Added missing dimensions at the bottom of figure.
5.3.1: Figure 10: Change pad width from '0.60 +/-0.03' to '0.55 -0, +0.08'
Figure 10 detail 2: Change the tolerances from '0.08 +/- 0.015' to '0.10 +/-0.05'.
Figure 14: Deleted the MX1 product code
Figure 17A and 17B: Changed the dimension in section Y-Y from '.2mm' to '2.0 mm'.
5.10: Updated IEC-xxx reference to IEC 61754-20. Updated TIA reference for dual LC to TIA/EIA-604-10A.

Section 7:
7.1:Added the following text: 'This QSFP+ specification is based on the INF8438 specification however it is not backward compatible. Address 128 Page00 is used to indicate the use of the QSFP+ memory map rather than the QSFP memory map.'
7.2.1: Changed reference from 'clause 3.1.2' to 'clause 4.1.2'.
7.4: Changed reference from 'clause 6.6' to 'clause 7.6' ; changed reference from 'clause 3.1.1.1' to 'clause 4.1.1.1' ; changed reference from 'clause 3.1.2' to 'clause 4.1.2'.
7.6: Changed the last byte designation in page 00 from '126' to '128'
7.6: Changed 'Page 03 is required if byte 2, bit 2 in the lower page is set high' to 'Page 03 is required if byte 2, bit 2 in the lower page is low.'

7.6.1: Consolidated 3 columns in tables 17-47: single column now reads: Passive copper, active copper and active optical.
7.6.1.2: Added: 'These flags may be masked. (See 7.6.1.6) '
7.6.1.4: Changed reference from ‘clause 6.6.1.3’ to ‘clause 7.6.1.3’
Table 24: Address 88: changed ‘RX’ to ‘TX’
7.6.2 Table 29: Added to byte 146 "Link length supported for 50/125 um fiber (OM4), units of 2 m) when Byte 147 declares 850 nm VCSEL as defined in Table 37."
Table 38: Changed reserved bytes from ‘7-4 to ‘7-5’. Added 'Reserved for' in front of FDR for bit 3 and in front of EDR for bit 4
Table 41: Address 220 changed from ‘FEC BER’ to ‘reserved’
Table 43: Added references to table 44.
Table 45: For Address 226 - 239, in the Description column, changed the entry (2 Bytes) to (14 Bytes).
Table 46: address 208-223: Changed byte column from ‘8’ to ‘16’.
7.6.5.2: changed ‘clause 3.1.3’ to ‘clause 4.1.3’

Changes from revision 3.6 to 3.7:

Changed the title from ‘Qsfp+ Copper And Optical Modules’ to ‘QSFP+ 4X 10 Gbs Pluggable Transceiver’

Section 2:
2.1 and 2.2: Added references.

Section 4:
4.1.1.5: The host needs to read both byte 2 and the flag field after completion of reset. Defined bit 0 of Byte 6 in Table 20 to be Initialization complete Flag. Designated Byte 103 bit 0 as the mask bit for Initialization complete flag.

4.3: Added ‘Where ESD performance is not otherwise specified, e.g. in the InfiniBand specification,’

Section 5:
5.3: Figure 9: Added ‘component free area’ to drawing
5.3.1: Figure 10: The accepted Rev 3.6 comment to change pad width from „0.60 +/-0.03" to „0.55 -0, +0.08"" was not implemented in Fig 10.

Added LPMode Deassert time to Table 15

Parameter	Symbol	Max	Unit	Conditions
LPMode Deassert Time	toff_LPMode	300	ms	Time for deassertion of LPMode (Vin: LPMode=Vil) until module until the module is fully functional[3]

Changes from revision 3.7 to 3.8:
- Editorial review of formatting and font consistency throughout.
- Bitmapped figures 24-29 were reconstructed as tables.
- Identified figures that have been patched by Text Boxes need to be re-drawn.

Changes from revision 3.8 to 3.9:
- Replaced Figure 30
- Corrected sub-levels in Section 7.5
- Deleted bitmapped figures 24-29 which had been left for comparison in 3.8

Changes from revision 3.9 to 4.0:
- Changed 'Module Maximum Current with LPMode Pin asserted' and 'Module Maximum Current with LPMode Pin deasserted' to 'Maximum instantaneous current with LPMode asserted' and

'Maximum instantaneous current with LPMode deasserted'
- Changed "The QSFP+ module and host contacts with exception of the module and host high speed signal contacts shall withstand 1000 V electrostatic discharge ..." to "The QSFP+ module and host high speed signal contacts shall withstand 1000 V electrostatic discharge ..."
- In Table 8 change the definition for datum B from, "Centerline of bezel" to "Inside surface of bezel".
- In Figure 10 (top-left corner) changed from "0.55 -0 + 0.08", back to, "0.60 +/- 0.13 x 45° 2 PLACES"
- In Table 15, for LPMode Deassert Time, add a reference in the conditions column to a new note, Note 5, and add to the table "Note 5. Does not apply to Power Level 1 devices."
- In Table 25, for byte 103, change bit column entry from '3 - 0' to '3 - 1'.

Changes from revision 4.0 to 4.1:
- Global change to improve legibility: subscripts replaced with regular fonts
- Renumbered 7.5.3.4 to 7.5.3.3
- Added SFF-8472 to 2.1 References and deleted 7.6 "APPLICABLE DOCUMENTS" paragraph
- Reorganized 2.1 References into a list
- Reserved Table 33 Byte 133 bits 3-0 and Byte 134 bits 7-4

Changes from revision 4.1 to 4.2:
- Figures 7, 8, 9, 10, 11, 12, 13A, 13B, 17A & 17B redrawn
- Pad width on Figure 10 changed back to 0.60±0.03 from 0.55±0.08

Changes from revision 4.2 to 4.3:
- Figure 8 redrawn
  - Note 4 was clarified
  - Note 9 re higher wattage models added
  - length of transceiver outside of cage restored to the 20 Max of the MSA
- Figure 9 redrawn
  - Corrected Section B-B drafting error on dimensioning of Component Free Area
  - Added R 0.3 Max, 2 Plc to two radii (needed for hard stop to function properly)
  - Reversed crosshatching of Section J-J to clarify latch point and surface areas
- Figure 17A redrawn
  - Note 9 re higher wattage models added
- Figure 19 redrawn
  - Re-dimensioned thermal contact area to coincide with opening in top of cage

August 20
- Figure 10 redrawn
  - Note re solder mask was incomplete

To be verified
- Figure 17A
  - As redrawn includes three sets of dimensions which include that of 17B.
  - Figure 17B deleted and Figure 17A renumbered as Figure 17.

Change from Revision 4.3 to 4.4:
- Table 30 Identifier Values and Table 34 Encoding Values modified to point to SFF-8024 as the reference for later values and codes.

Change from Revision 4.4 to 4.5
- ACK and NACK modified per user request (Figures 27, 28, 29)
- Verified that Figure 17A was comprehensive, deleted 17B, and renamed 17A as 17.

Change from Revision 4.5 to 4.6
- Removed Ref from upper left of Figure 17 (valid for only one of the configurations)
- Moved notes from body to below figure.

Change from Revision 4.6 to 4.7
- Corrected editorial error on Figure 28 and Figure 29 (Host NACK to Device ACK)

Change from Revision 4.7 to 4.8
- Replaced Figure 8, Figure 9, Figure 13A, Figure 17, and Figure 19 with improved drawings
- Updated Table 9 Latch Retention spec from 180N to 125N

Rev 4.9 (August 31, 2018)
- Document to be withdrawn from EIA; other than the changes to the header and cover page, no content or formatting changes have been made since Rev 4.8 of this document.

Foreword

The development work on this specification was done by the SFF Committee, an industry group. The membership of the committee since its formation in August 1990 has included a mix of companies which are leaders across the industry.

When 2 1/2" diameter disk drives were introduced, there was no commonality on external dimensions e.g. physical size, mounting locations, connector type, and connector location, between vendors.

The first use of these disk drives was in specific applications such as laptop portable computers and system integrators worked individually with vendors to develop the packaging. The result was wide diversity, and incompatibility.

The problems faced by integrators, device suppliers, and component suppliers led to the formation of the SFF Committee as an industry ad hoc group to address the marketing and engineering considerations of the emerging new technology.

During the development of the form factor definitions, other activities were suggested because participants in the SFF Committee faced more problems than the physical form factors of disk drives. In November 1992, the charter was expanded to address any issues of general interest and concern to the storage industry. The SFF Committee became a forum for resolving industry issues that are either not addressed by the standards process or need an immediate solution.

Those companies which have agreed to support a specification are identified in the first pages of each SFF Specification. Industry consensus is not an essential requirement to publish an SFF Specification because it is recognized that in an emerging product area, there is room for more than one approach. By making the documentation on competing proposals available, an integrator can examine the alternatives available and select the product that is felt to be most suitable.

SFF Committee meetings are held during T10 weeks (see www.t10.org), and Specific Subject Working Groups are held at the convenience of the participants. Material presented at SFF Committee meetings becomes public domain, and there are no restrictions on the open mailing of material presented at committee meetings.

Most of the specifications developed by the SFF Committee have either been incorporated into standards or adopted as standards by EIA (Electronic Industries Association), ANSI (American National Standards Institute) and IEC (International Electrotechnical Commission).

If you are interested in participating or wish to follow the activities of the SFF Committee, the signup for membership and/or documentation can be found at:

www.sffcommittee.com/ie/join.html

The complete list of SFF Specifications which have been completed or are currently being worked on by the SFF Committee can be found at:

ftp://ftp.seagate.com/sff/SFF-8000.TXT

If you wish to know more about the SFF Committee, the principles which guide the activities can be found at:

ftp://ftp.seagate.com/sff/SFF-8032.TXT

Suggestions for improvement of this specification will be welcome. They should be sent to the SFF Committee, 14426 Black Walnut Ct, Saratoga, CA 95070.

TABLE OF CONTENTS

1. Scope 9
1.1 Description of Clauses 9
2. References 9
2.1 Industry Documents 9
2.2 SFF Specifications 9
2.3 Sources 9
2.4 Conventions 10
3 Introduction 11
4 Electrical Specification 13
4.1 Electrical Connector..... 13
4.1.1 Low Speed Electrical Hardware Pins..... 17
4.1.1.1 ModSelL..... 18
4.1.1.2 ResetL..... 18
4.1.1.3 LPMode..... 18
4.1.2 Low Speed Electrical Specification..... 19
4.1.3 High Speed Electrical Specification..... 20
4.1.3.1 Rx(n)(p/n)..... 20
4.1.3.2 Tx(n)(p/n)..... 20
4.2 Power Requirements..... 21
4.2.1 Host Board Power Supply Filtering..... 21
4.3 ESD..... 23
5 Mechanical and Board Definition 24
5.1 Introduction..... 24
5.2 QSFP+ Datums and Component Alignment..... 24
5.3 QSFP+ Module Mechanical Package Dimensions..... 26
5.3.1 Mating of QSFP+ Module PCB to QSFP+ Electrical Connector 29
5.4 Host PCB Layout..... 30
5.4.1 Insertion, Extraction and Retention Forces for QSFP+ Modules..... 31
5.5 Color Coding and Labeling of QSFP+ Modules..... 32
5.6 Bezel for Systems Using QSFP+ Modules..... 32
5.6.1 Bezel for the Thru Bezel Cage Assembly Version..... 33
5.6.2 Bezel for the Behind the Bezel Cage Assembly Version..... 34
5.7 QSFP+ Electrical Connector Mechanical..... 35
5.8 Individual QSFP+ Cage Assembly Versions..... 36
5.8.1 QSFP+ Heat Sink Clip Dimensions..... 39
5.8.2 QSFP+ Heat Sink Dimensions..... 39
5.8.3 Light Pipes..... 40
5.9 Dust / EMI Cover..... 41
5.10 Optical Interface..... 41
6 Environmental and Thermal 44
6.1 Thermal Requirements..... 44
7 Management Interface 44
7.1 Introduction..... 44
7.2 Timing Specification..... 44
7.2.1 Introduction..... 44
7.2.2 Management Interface Timing Specification..... 44
7.2.3 Serial Interface Protocol..... 45
7.2.3.1 Management Timing Parameters..... 46
7.3 Memory Interaction Specifications..... 46
7.3.1 Timing for Soft Control and Status Functions..... 47
7.4 Device Addressing and Operation..... 49
7.5 Read/Write Functionality..... 51
7.5.1 QSFP+ Memory Address Counter (Read AND Write Operations)..... 51
7.5.2 Read Operations..... 51
7.5.2.1 Current Address Read..... 51

7.5.2.2 Random Read..... 52
7.5.2.3 Sequential Read..... 53
7.5.2.4 Sequential Read from Random Start Address..... 54
7.5.3 Write Operations..... 55
7.5.3.1 BYTE Write..... 55
7.5.3.2 Sequential Write..... 56
7.5.3.3 Acknowledge Polling..... 57
7.6 QSFP+ Memory Map..... 57
7.6.1 Lower Memory Map..... 59
7.6.1.1 Status Indicator Bits..... 59
7.6.1.2 Interrupt Flags..... 60
7.6.1.3 Module Monitors..... 64
7.6.1.4 Channel Monitoring..... 65
7.6.1.5 Control Bytes..... 67
7.6.1.6 Module and Channel Masks..... 68
7.6.1.7 Rate Select (Byte 87-88)..... 69
7.6.1.8 Password Entry and change..... 71
7.6.2 Upper Memory Map Page 00h..... 71
7.6.2.1 Identifier (Address 128)..... 73
7.6.2.2 Extended Identifier (Address 129)..... 73
7.6.2.3 Connector (Address 130)..... 74
7.6.2.4 Specification compliance (Address 131-138)..... 74
7.6.2.5 Encoding (Address 139)..... 76
7.6.2.6 BR, nominal (Address 140)..... 76
7.6.2.7 Extended RateSelect Compliance (Address 141)..... 76
7.6.2.8 Length (Standard SM Fiber)-km (Address 142)..... 77
7.6.2.9 Length (OM3) (Address 143)..... 77
7.6.2.10 Length (OM2) (Address 144)..... 77
7.6.2.11 Length (OM1) (Address 145)..... 77
7.6.2.12 Cable Assembly Length (Copper or active cable) (Address 146)..... 77
7.6.2.13 Device Tech (Address 147)..... 77
7.6.2.14 Vendor Name (Address 148-163)..... 78
7.6.2.15 Extended Module Codes (Address 164)..... 78
7.6.2.16 Vendor OUI (Address 165-167)..... 79
7.6.2.17 Vendor PN (Address 168-183)..... 79
7.6.2.18 Vendor Rev (Address 184-185)..... 79
7.6.2.19 Wavelength (Address 186-187)..... 79
7.6.2.20 Wavelength Tolerance (Address 188-189)..... 79
7.6.2.21 Max Case Temp (Address 190)..... 80
7.6.2.22 CC_BASE (Address 191)..... 80
7.6.2.23 Options (Address 192-195)..... 80
7.6.2.24 Vendor SN (Address 196-211)..... 81
7.6.2.25 Date Code (Address 212-219)..... 81
7.6.2.26 Diagnostic Monitoring Type (Address 220)..... 82
7.6.2.27 Enhanced Options (Address 221)..... 82
7.6.2.28 CC_EXT (Address 223)..... 83
7.6.2.29 Vendor Specific (Address 224-255)..... 83
7.6.3 Upper Memory Map Page 01h..... 84
7.6.4 User Writable and Vendor Specific Memory..... 84
7.6.5 Upper Memory Page 03h..... 84
7.6.5.1 Module and Channel Thresholds..... 84
7.6.5.2 Optional Channel Controls..... 86
7.6.5.3 Channel Monitor Masks..... 87

SFF Committee --

QSFP+ 4X 10 Gb/s Pluggable Transceiver

1. Scope

In an effort to broaden the applications for storage devices, an ad hoc industry group of companies representing system integrators, peripheral suppliers, and component suppliers decided to address the issues involved.

The SFF Committee was formed in August, 1990 and the first working document was introduced in January, 1991.

1.1 Description of Clauses

Clause 1 contains the Scope and Purpose

Clause 2 contains Referenced and Related Standards and SFF Specifications

Clause 3 begins the specification

Clause 4 contains electrical specifications

Clause 5 contains mechanical specifications and printed circuit board recommendations

Clause 6 contains environmental and thermal considerations

Clause 7 is a description of the management interface and management register contents.

2. References

The SFF Committee activities support the requirements of the storage industry, and it is involved with several standards.

2.1 Industry Documents

- GR-253-CORE
- IEEE Std 802.3-2012
- InfiniBand Architecture Specifications
- FC-PI-2
- FC-PI-3
- FC-PI-4
- SAS 2.0/2.1
- INF-8438 QSFP (Quad SFP) 4 Gbs 4X Transceiver
- SFF-8636 Shielded Cables Common Management Interface
- SFF-8431 SFP+ (Chapter 3 high speed serial interface)
- SFF-8472 Diagnostic Monitoring Interface for Optical Transceivers

2.2 SFF Specifications

There are several projects active within the SFF Committee. The complete list of specifications which have been completed or are still being worked on are listed in the specification at ftp://ftp.seagate.com/sff/SFF-8000.TXT

2.3 Sources

Those who join the SFF Committee as an Observer or Member receive electronic copies of the minutes and SFF specifications (http://www.sffcommittee.com/ie/join.html).

Copies of ANSI standards may be purchased from the InterNational Committee for Information Technology Standards (http://tinyurl.com/c4psg).

Copies of SFF, ASC T10 (SCSI), T11 (Fibre Channel) and T13 (ATA/SATA) standards and standards still in development are available on the HPE version of CD_Access (http://tinyurl.com/85fts).

2.4 Conventions

The ISO convention of numbering is used i.e., the thousands and higher multiples are separated by a space and a period is used as the decimal point. This is equivalent to the English/American convention of a comma and a period.

AMERICAN	FRENCH	ISO
0.6	0,6	0.6
1,000	1 000	1 000
1,323,462.9	1 323 462,9	1 323 462.9

3 Introduction

This Specification covers the following items:

a) electrical interfaces (including pinouts for data control, status, configuration and test signals) and the electrical connector and recommended host PCB layout requirements.

b) management interfaces encompassing features from the current SFP MSA and includes specific multi-data rate and multi-protocol implementations.

c) optical interfaces (including the optical connector receptacle and mating fiber optic connector plug and recommended breakout cable assembly.) The optical specifications are left to the applicable standards for each protocol.

d) mechanical including package outline with latching detail and optical connector receptacle detail, electrical connector mechanical details for both the module and host PCB halves, front panel cut-out recommended dimensions and a blocking key solution to prevent damage from XFP modules.

e) thermal requirements (case temperatures)

f) electromagnetic interference (EMI) recommendations(including necessary shielding features to seal the OEM chassis front panel output with and without the QSFP+ module installed in the cage.)

g) electrostatic discharge (ESD) requirements solely to the extent disclosed in the Specification where the sole purpose of such disclosure is to enable products to operate, connect or communicate as defined within the Specifications.

The overall package dimension shall conform to the indicated dimensions and tolerances indicated in clause 5.The mounting features shall be located such that the products are mechanically interchangeable with the cage and connector system. In addition, the overall dimensions and mounting requirements for the cage and connector system on a circuit board shall be configured such that the products are mechanically and electrically interchangeable and the overall dimensions and insertion requirements for the optical connector and corresponding fiber optic cable plug shall be such that the products are mechanically and optically interchangeable.

The electrical and optical specifications may be compatible with those enumerated in the ITU-T Recommendation G.957 (STM-1, STM-4 and STM-16), Telcordia Technologies GR-253-CORE (OC-3, OC-12, OC-48 and OC-192), Ethernet IEEE 802.3 (Gigabit, 10Gigabit and 40Gigabit Ethernet), InfiniBand Architecture Specifications (SDR, DDR and QDR), SFF-8431, or Fibre Channel-PI-3/4 (2GFC, 4GFC, 8GFC) and 10GFC. Electrical and optical specifications may be compatible with standards under development.

The Specifications will provide a common solution for combined four-channel ports that support SONET/SDH and/or Ethernet and/or InfiniBand and/or Fibre Channel specifications. This specification encompasses design(s) capable of supporting multimode, single mode Modules, passive copper, active copper and active optical cables.

Table 1 - Multimode Fiber Applications

	Fiber Type	IEE 802.3			Fibre Channel- FC-PI-2/3/4				InfiniBand		
Distance	Core Diameter MHZ*km	1GE	10 GE	40 GE	2 GFC	4 GFC	8 GFC	10 GFC	SDR	DDR	QDR
275m	62.5/200	X									
220m	62.5/160	X									
26m	62.5/160		X					X			
33m	62.5/200		X					X			
150m	62.5/200				X						
75m	62.5/200								X		
70m	62.5/200					X					
50m	62.5/200									X	
21m	62.5/200						X				
550m	50/500	X									
500m	50/400	X									
66m	50/400		X					X			
82m	50/500		X					X			
300m	50/2000		X					X			
300m	50/500				X						
150m	50/500					X					
125m	50/500								X		
75m	50/500									X	
50m	50/500						X				
200m	50/2000				X				X		
380m	50/2000					X					
150m	50/2000						X			X	
100m	50/2000			X							X
150m	50/4700			X							

Table 2 – Single mode Fiber Applications

		IEEE 802.3			Fibre Channel FC-PI-2/3/4				InfiniBand		
Distance	Fiber type	1 GE	10 GE	40 GE	2 GFC	4 GFC	8 GFC	10 GFC	SDR	DDR	QDR
1.4km	SM						X				
2km	SM										
4km						X					
10km	SM	X	X	X	X	X	X	X	X	X	X
30km	SM		X					X			
40km	SM		X					X			

An application reference Model, See Figure 1, shows the high-speed data interface between an ASIC (SerDes) and the QSFP+ module. Only one data channel of the interface is shown for simplicity. Either parallel MPO or duplex LC fiber connectors can be used for the optical interface.

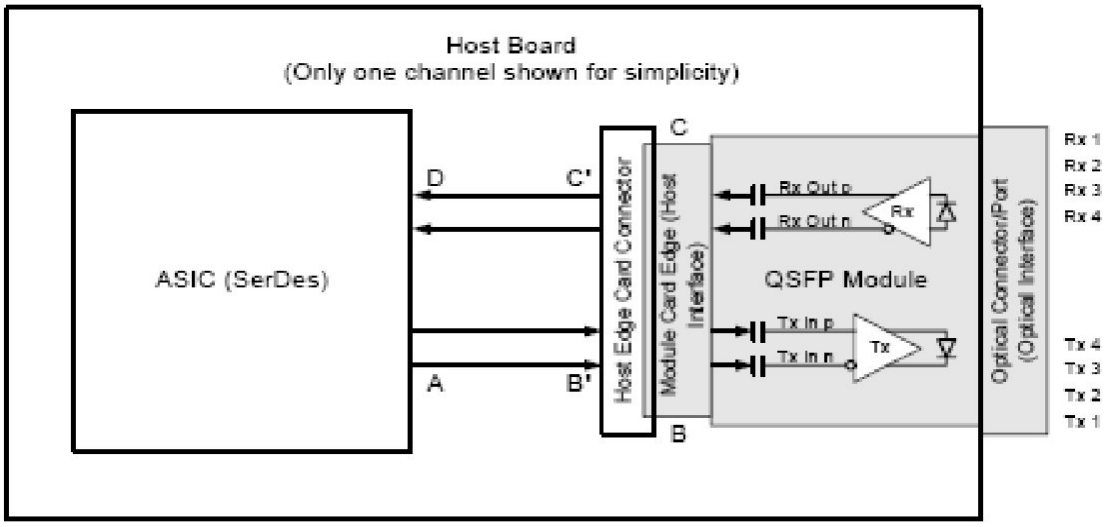

Figure 1 – Application Reference Model

QSFP+ reference points for 6Gb/s and lower speeds are as follows:

A: Host ASIC transmitter output at ASIC package pin on a DUT board

B: Host ASIC transmitter output across the Host Board and Host Edge Card connector at the Module Card Edge interface

B’: Host ASIC transmitter output across the Host Board at Host Edge Card Connector

C: QSFP+ receiver output at the Module Card Edge interface

C’: QSFP+ receiver output at Host Edge Card Connector

D: QSFP+ receiver output at Host ASIC package receiver input pin on a DUT board

Note: For speeds above 6Gb/s the compliance board methodology of IEEE802.3ba, FC-PI4 and SFF8431 should be used. Measurements taken with QSFP+ compliance boards should be corrected for any difference between the loss of these compliance boards and the loss of the compliance boards specified in the standard.

4 Electrical Specification

This clause contains pin definition data for the QSFP+ Module. The pin definition data is generic for gigabit -per-second datacom applications such as Fibre Channel and Gigabit Ethernet and SONET/ATM applications. Compliance Points for high-speed signal electrical measurements are defined in Figure 1. Compliance Points for all other electrical signals are at comparable points at the host edge card connector.

4.1 Electrical Connector

Figure 2 shows the signal symbols and contact numbering for the QSFP+ Module edge connector. The diagram shows the module PCB edge as a top and bottom view. There are 38 contacts intended for high speed, low speed signals, power and ground connections. Table 3 provides more information about each of the 38 contacts.

For EMI protection the signals to the connector should be shut off when the QSFP+ Module is removed. Standard board layout practices such as connections to Vcc and GND with Vias, use of short and equal-length differential signal lines, use of microstrip-lines and 50 Ohm terminations are recommended. The chassis ground (case common) of the QSFP+ module

should be isolated from the module's circuit ground, GND, to provide the equipment designer flexibility regarding connections between external electromagnetic interference shields and circuit ground, GND, of the module.

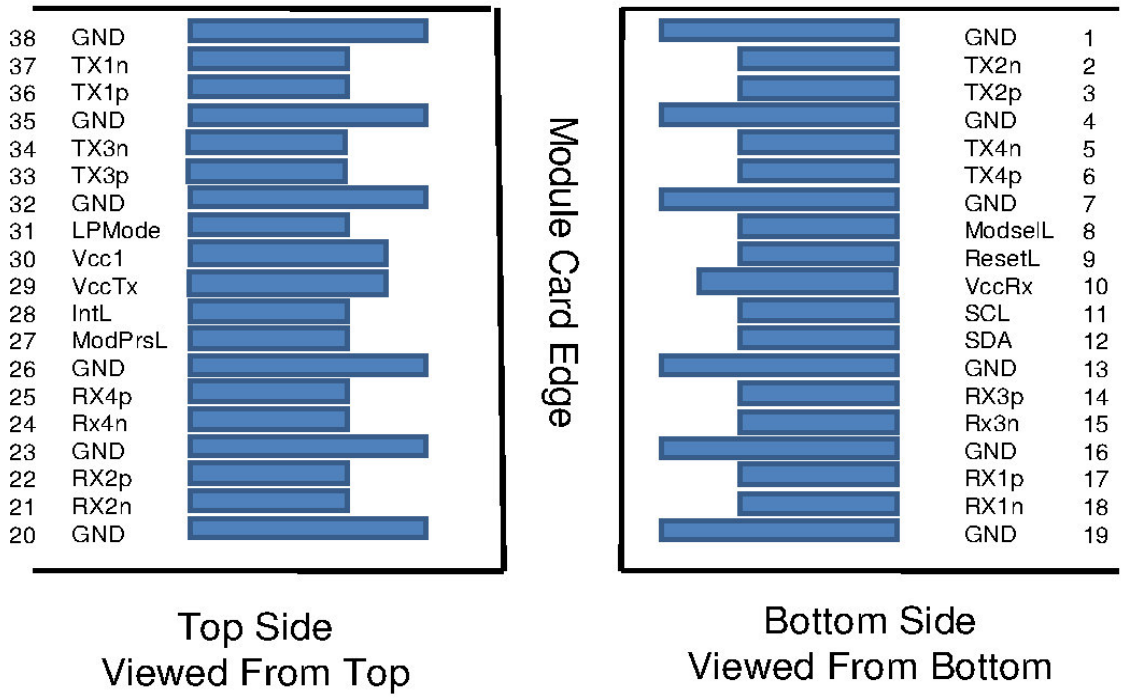

Figure 2 QSFP+ Module Pad Layout

Table 3: Pin Function Definition (See Figure 10 for pad dimensions)

Pin	Logic	Symbol	Description	Plug Sequence	Notes
1		GND	Ground	1	1
2	CML-I	Tx2n	Transmitter Inverted Data Input	3	
3	CML-I	Tx2p	Transmitter Non-Inverted Data Input	3	
4		GND	Ground	1	1
5	CML-I	Tx4n	Transmitter Inverted Data Input	3	
6	CML-I	Tx4p	Transmitter Non-Inverted Data Input	3	
7		GND	Ground	1	1
8	LVTTL-I	ModSelL	Module Select	3	
9	LVTTL-I	ResetL	Module Reset	3	
10		Vcc Rx	+3.3V Power Supply Receiver	2	2
11	LVCMOS-I/O	SCL	2-wire serial interface clock	3	
12	LVCMOS-I/O	SDA	2-wire serial interface data	3	
13		GND	Ground	1	1
14	CML-O	Rx3p	Receiver Non-Inverted Data Output	3	
15	CML-O	Rx3n	Receiver Inverted Data Output	3	
16		GND	Ground	1	1
17	CML-O	Rx1p	Receiver Non-Inverted Data Output	3	
18	CML-O	Rx1n	Receiver Inverted Data Output	3	
19		GND	Ground	1	1
20		GND	Ground	1	1
21	CML-O	Rx2n	Receiver Inverted Data Output	3	
22	CML-O	Rx2p	Receiver Non-Inverted Data Output	3	
23		GND	Ground	1	1
24	CML-O	Rx4n	Receiver Inverted Data Output	3	
25	CML-O	Rx4p	Receiver Non-Inverted Data Output	3	
26		GND	Ground	1	1
27	LVTTL-O	ModPrsL	Module Present	3	
28	LVTTL-O	IntL	Interrupt	3	
29		Vcc Tx	+3.3V Power supply transmitter	2	2
30		Vcc1	+3.3V Power supply	2	2
31	LVTTL-I	LPMode	Low Power Mode	3	
32		GND	Ground	1	1
33	CML-I	Tx3p	Transmitter Non-Inverted Data Input	3	
34	CML-I	Tx3n	Transmitter Inverted Data Input	3	
35		GND	Ground	1	1
36	CML-I	Tx1p	Transmitter Non-Inverted Data Input	3	
37	CML-I	Tx1n	Transmitter Inverted Data Input	3	
38		GND	Ground	1	1
Note 1: GND is the symbol for signal and supply (power) common for the QSFP+ module. All are common within the QSFP+ module and all module voltages are referenced to this potential unless otherwise noted. Connect these directly to the host board signal-common ground plane.					
Note 2: Vcc Rx, Vcc1 and Vcc Tx are the receiver and transmitter power supplies and shall be applied concurrently. Requirements defined for the host side of the Host Edge Card Connector are listed in Table 6. Recommended host board power supply filtering is shown in Figures 3 and 4. Vcc Rx Vcc1 and Vcc Tx may be internally connected within the QSFP+ Module in any combination. The connector pins are each rated for a maximum current of 500 mA.					

Figure 3 shows an example of a complete QSFP+ host PCB schematic with connections to SerDes and control ICs.

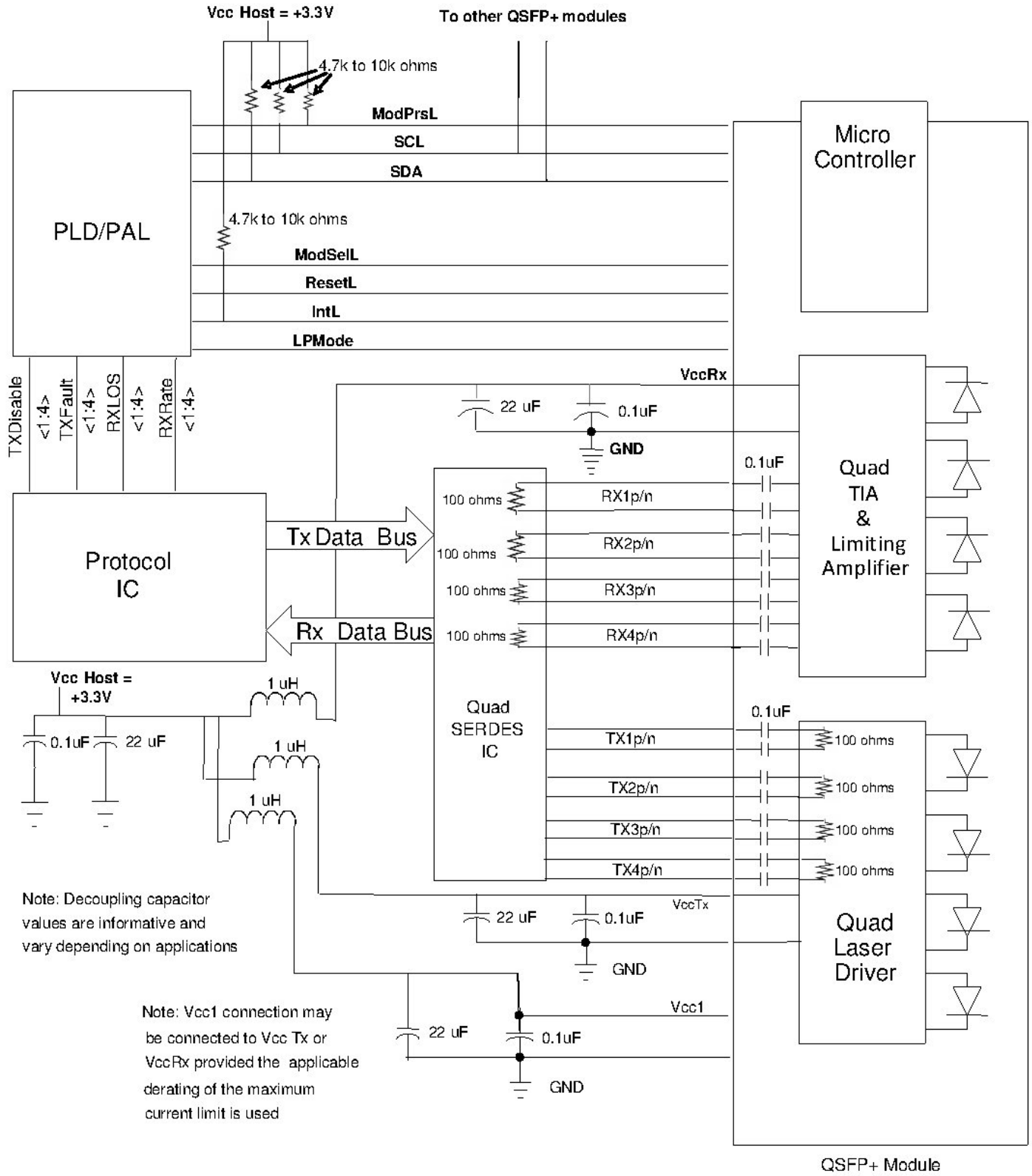

Figure 3a: Example QSFP+ Host Board Schematic For Optical Modules

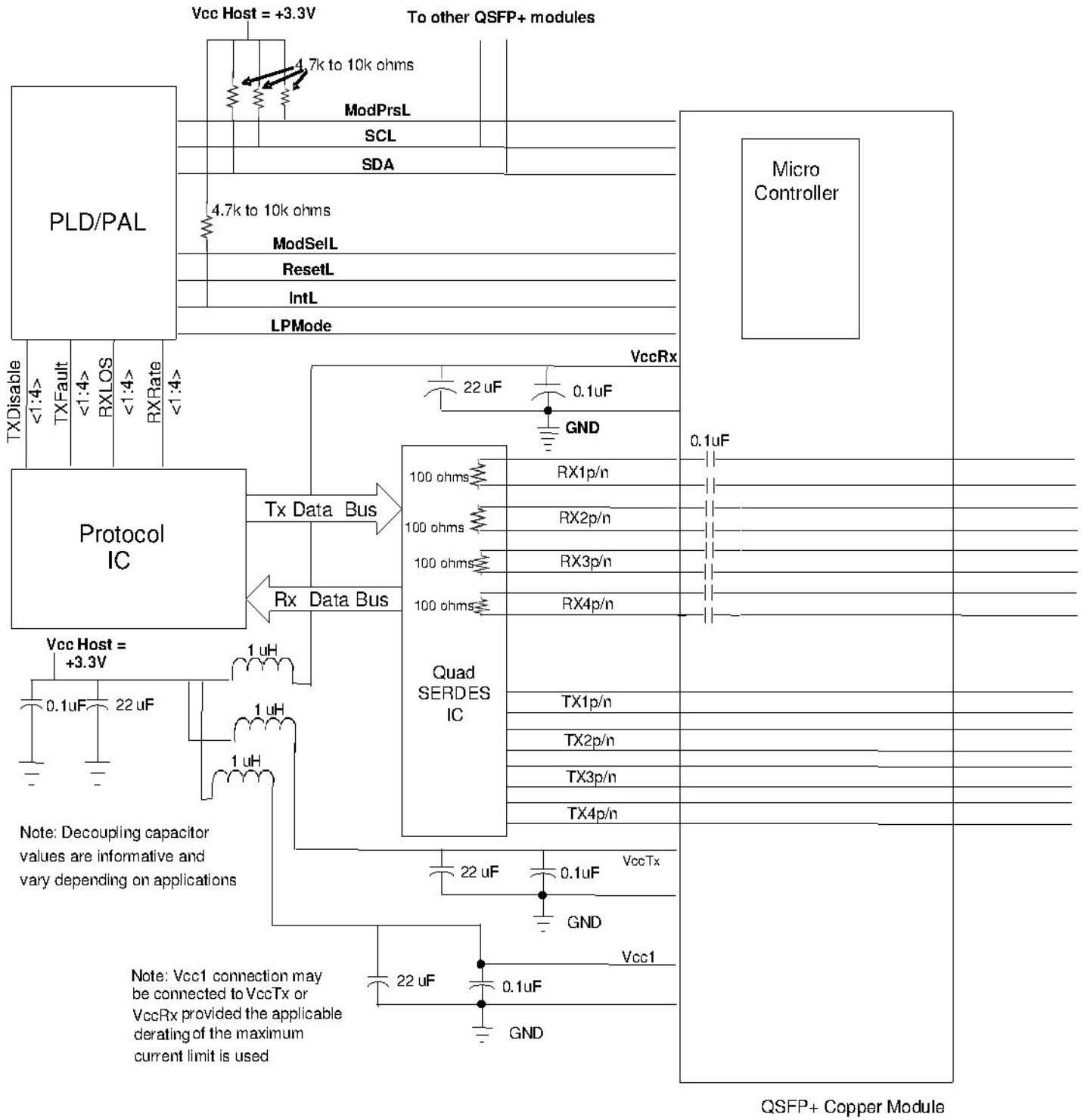

Figure 3b Example QSFP+ Host Board Schematic for passive copper cables

4.1.1 Low Speed Electrical Hardware Pins

In addition to the 2-wire serial interface the module has the following low speed pins for control and status:

ModSelL
ResetL
LPMode

ModPrsL
IntL

4.1.1.1 ModSelL

The ModSelL is an input pin. When held low by the host, the module responds to 2-wire serial communication commands. The ModSelL allows the use of multiple QSFP+ modules on a single 2-wire interface bus. When the ModSelL is "High", the module shall not respond to or acknowledge any 2-wire interface communication from the host. ModSelL signal input node must be biased to the "High" state in the module.

In order to avoid conflicts, the host system shall not attempt 2-wire interface communications within the ModSelL de-assert time after any QSFP+ modules are deselected. Similarly, the host must wait at least for the period of the ModSelL assert time before communicating with the newly selected module. The assertion and de-asserting periods of different modules may overlap as long as the above timing requirements are met.

4.1.1.2 ResetL

The ResetL pin must be pulled to Vcc in the QSFP+ module. A low level on the ResetL pin for longer than the minimum pulse length (t_Reset_init) initiates a complete module reset, returning all user module settings to their default state. Module Reset Assert Time (t_init) starts on the rising edge after the low level on the ResetL pin is released. During the execution of a reset (t_init) the host shall disregard all status bits until the module indicates a completion of the reset interrupt. The module indicates this by asserting "low" an IntL signal with the Data_Not_Ready bit negated. Note that on power up (including hot insertion) the module should post this completion of reset interrupt without requiring a reset.

4.1.1.3 LPMode

The LPMode pin shall be pulled up to Vcc in the QSFP+ module. This function is affected by the LPMode pin and the combination of the Power_over-ride and Power_set software control bits (Address A0h, byte 93 bits 0,1).

The module has two modes a low power mode and a high power mode. The high power mode operates in one of the four power classes.

When the module is in a low power mode it has a maximum power consumption of 1.5W. This protects hosts that are not capable of cooling higher power modules, should such modules be accidentally inserted.

The modules 2-wire serial interface and all laser safety functions must be fully operational in this low power mode. The module shall still support the completion of reset interrupt in this low power mode.

If the Extended Identifier bits (Page 00h, byte 129 bits 6-7) indicate a power consumption greater than 1.5W and the module is in low power mode it must reduce its power consumption to less than 1.5W while still maintaining the functionality above. The exact method of accomplishing low power is not specified, however it is likely that either the Tx or Rx or both will not be operational in this state.

If the Extended Identifier bits (Page 00h, byte 129 bits 6-7) indicate that its power consumption is less than 1.5W then the module shall be fully functional independent of whether it is in low power or high power mode.

The Module should be in low power mode if the LPMode pin is in the high state, or if the Power_ override bit is in the high state and the Power_set bit is also high. The module should be in high power mode if the LPMode pin is in the low state, or the Power_override bit is high and the Power_set bit is low. Note that the default state for the Power_override bit is low.

A truth table for the relevant configurations of the LPMode and the Power_over-ride and Power_set are shown in Table 4.

Table 4 - Power Mode Truth Table

LPMode	Power_overide Bit	Power_set Bit	Module Power Allowed
1	0	X	Low Power
0	0	X	High Power
X	1	1	Low Power
X	1	0	High Power

At Power up, the Power_override and Power_set bits shall be set to 0.

4.1.1.4 ModPrsL

ModPrsL is pulled up to Vcc_Host on the host board and grounded in the module. The ModPrsL is asserted "Low" when inserted and deasserted "High" when the module is physically absent from the host connector.

4.1.1.5 IntL

IntL is an output pin. When "Low", it indicates a possible module operational fault or a status critical to the host system. The host identifies the source of the interrupt using the 2-wire serial interface. The IntL pin is an open collector output and must be pulled to host supply voltage on the host board. The INTL pin is deasserted "High" after completion of reset, when byte 2 bit 0 (Data Not Ready)is read with a value of '0' and the flag field is read (see 7.6.1.2).

4.1.2 Low Speed Electrical Specification

Low speed signaling other than SCL and SDA is based on Low Voltage TTL (LVTTL) operating at Vcc. Vcc refers to the generic supply voltages of VccTx, VccRx, Vcc_host or Vcc1. Hosts shall use a pull-up resistor connected to Vcc_host on each of the 2-wire interface SCL (clock), SDA (data), and all low speed status outputs. The SCL and SDA is a hot plug interface that may support a bus topology. During module insertion or removal, the module may implement a pre-charge circuit which prevents corrupting data transfers from other modules that are already using the bus.

Note 1-Timing diagrams for SCL and SDA are included in Subclause 6.2.2.

The QSFP+ low speed electrical specifications are given in Table 5. This specification ensures compatibility between host bus masters and the 2-wire interface.

Table 5 - Low Speed Control and Sense Signals

Parameter	Symbol	Min	Max	Unit	Condition
SCL and SDA	VOL	0	0.4	V	IOL(max)=3.0mA
	VOH	Vcc-0.5	Vcc+0.3	V	
SCL and SDA	VIL	-0.3	Vcc*0.3	V	
	VIH	VCC*0.7	Vcc + 0.5	V	
Capacitance for SCL and SDA I/O pin	Ci		14	pF	
Total bus capacitive load for SCL and SDA	Cb		100	pF	3.0 k Ohms Pullup resistor, max
			200	pF	1.6 k Ohms pullup resistor max
LPMode, Reset and ModSelL	VIL	-0.3	0.8	V	|Iin|<=125 uA for 0V<Vin,Vcc
	VIH	2	VCC+0.3	V	
ModPrsL and IntL	VOL	0	0.4	V	IOL=2.0mA
	VOH	VCC-0.5	VCC+0.3	V	

4.1.3 High Speed Electrical Specification

4.1.3.1 Rx(n)(p/n)

Rx(n)(p/n) are QSFP+ module receiver data outputs. Rx(n)(p/n) are AC-coupled 100 Ohm differential lines that should be terminated with 100 Ohm differentially at the Host ASIC(SerDes). The AC coupling is inside the QSFP+ module and not required on the Host board. When properly terminated, the differential voltage swing shall be less than or equal to 1600 mVpp or the relevant standard, whichever is less.

Note: Due to the possibility of insertion of QSFP modules into a host designed for QSFP+, it is recommended that the damage threshold of the host input be at least 1600 mV peak to peak differential.

Output squelch for loss of optical input signal, hereafter Rx Squelch, is required and shall function as follows. In the event of the optical signal on any channel becoming equal to or less than the level required to assert LOS, then the receiver data output for that channel shall be squelched or disabled. In the squelched or disabled state output impedance levels are maintained while the differential voltage swing shall be less than 50 mVpp.

In normal operation the default case has Rx Squelch active. Rx Squelch can be deactivated using Rx Squelch Disable through the 2-wire serial interface. Rx Squelch Disable is an optional function. For specific details refer to Subclause 7.6.5.2.

4.1.3.2 Tx(n)(p/n)

Tx(n)(p/n) are QSFP+ module transmitter data inputs. They are AC-coupled 100 Ohm differential lines with 100 Ohm differential terminations inside the QSFP+ module. The AC coupling is inside the QSFP+ module and not required on the Host board. For operation at 6 Gb/s and below the inputs will accept single-ended voltage swings between 250 mV to 800 mV and differential voltage swings between 500 mVpp to 1600 mVpp. For best EMI results, single-ended swings between 250 mV and 600 mV and differential voltage swings between 500 mVpp to 1200 mVpp are recommended. For operation above 6 Gb/s see the appropriate specification, e.g. 802.3ba Annex 86A, FC-PI-4, FC-PI-5 or the InfiniBand specification. For 10G Ethernet reference SFF-8431.

Due to the possibility of insertion of QSFP+ modules into a host designed for QSFP interface per INF-8438i the damage threshold of the module input shall be at least 1600 mV peak to peak differential.

Output squelch, hereafter Tx Squelch, for loss of input signal, hereafter Tx LOS, is an optional function. Where implemented it shall function as follows. In the event of the differential, peak-to-peak electrical signal on any channel becomes less than 50 mVpp, then the transmitter optical output for that channel shall be squelched or disabled and the associated TxLOS flag set.

Where squelched, the transmitter OMA shall be less than or equal to -26 dBm and when disabled the transmitter power shall be less than or equal to -30 dBm. For applications, e.g. Ethernet, where the transmitter off condition is defined in terms of average power, disabling the transmitter is recommended and for applications, e.g. InfiniBand, where the transmitter off condition is defined in terms of OMA, squelching the transmitter is recommended.

In module operation, where Tx Squelch is implemented, the default case has Tx Squelch active. Tx Squelch can be deactivated using Tx Squelch Disable through the 2-wire serial interface. Tx Squelch Disable is an optional function. For specific details refer to Clause 7.6.5.2.

4.2 Power Requirements

The power supply has three designated pins, Vcc Tx, Vcc1, and Vcc Rx, in the connector. Vcc1 is used to supplement Vcc Tx or Vcc Rx at the discretion of the module vendor. Power is applied concurrently to these pins.

Since different classes of modules exist with pre-defined maximum power consumption limits, it is necessary to avoid exceeding the system power supply limits and cooling capacity when a module is inserted into a system designed to only accommodate lower power modules. It is recommended that the host, through the management interface, identify the power consumption class of the module before allowing the module to go into high power mode.

A host board together with the QSFP+ module(s) forms an integrated power system. The host supplies stable power to the module. The module limits electrical noise coupled back into the host system and limits inrush charge/current during hot plug insertion.

All specifications shall be met at the maximum power supply current. No power sequencing of the power supply is required of the host system since the module sequences the contacts in the order of ground, supply and signals during insertion.

4.2.1 Host Board Power Supply Filtering

The host board should use the power supply filtering equivalent to that shown in Figure 4.

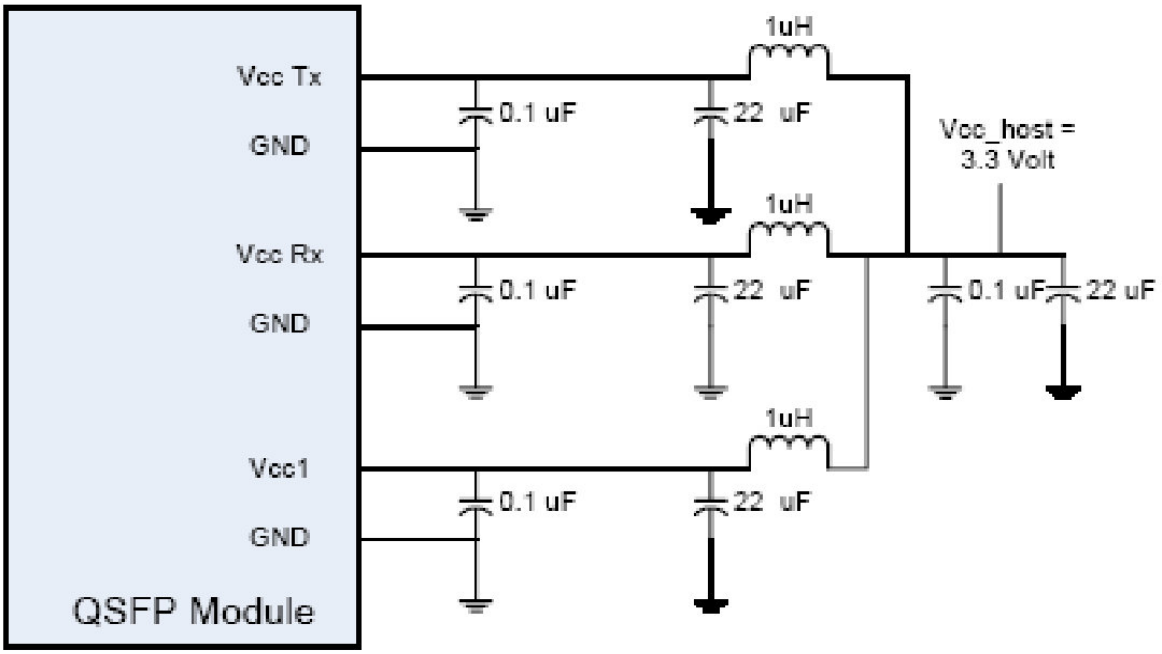

Figure 4 Recommended Host Board Power Supply Filtering

Any voltage drop across a filter network on the host is counted against the host DC set point accuracy specification. Inductors with DC Resistance of less than 0.1 Ohm should be used in order to maintain the required voltage at the Host Edge Card Connector. It is recommended that the 22 uF capacitors each have an equivalent series resistance of 0.22 ohm.

The specification for the power supply is shown in Table 6.

Table 6 - Power Supply Specification

Parameter	MIN	Nominal	Max	Unit	Condition
Vcc		3.3		V	Measured at Vcc Tx, Vcc Rx and Vcc1.
Vcc set point accuracy	-5		5	%	Measured at Vcc Tx, Vcc Rx and Vcc1.
Power Supply Noise including ripple			50	mV	1kHz to frequency of operation measured at Vcc host.
Sustained peak current at hot plug with LPMode Pin asserted			495	mA	See Figure 5
Maximum instantaneous current with LPMode asserted			600	mA	See Figure 5
Module sustained peak current with LPMode Pin deasserted			750	mA	
Maximum instantaneous current with LPMode deasserted			900	mA	

These limits separately apply to the current that flows through each inductor in the power supply filter.

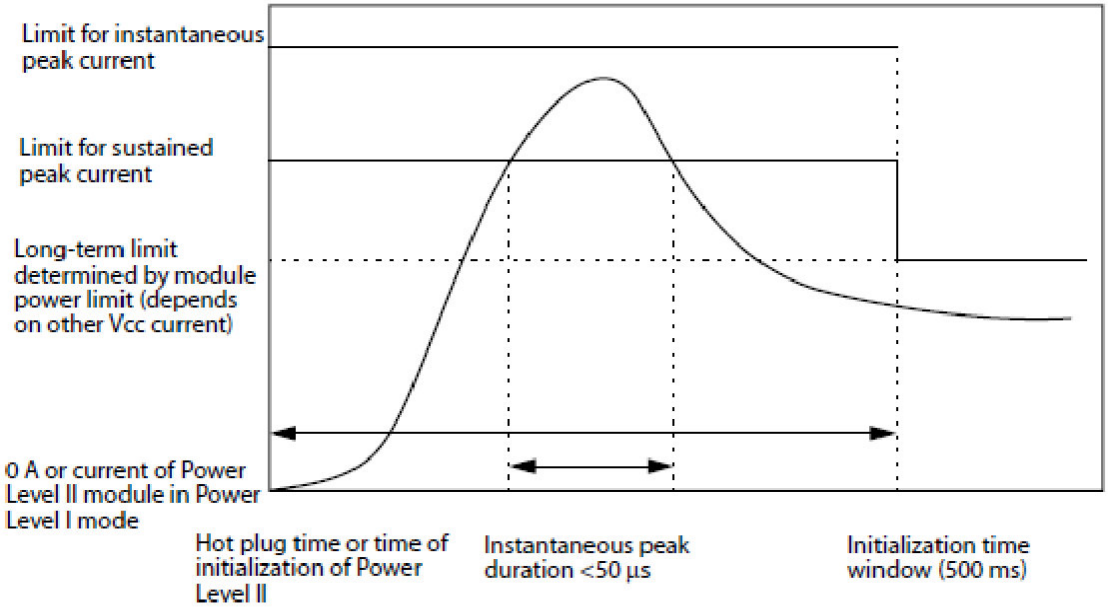

Figure 5 —Instantaneous and sustained peak currents for Vcc1, Vcc Tx or Vcc Rx

Power levels associated with classifications of modules are shown in Table 7.

Table 7 - Power Budget Classification

Power Level	Max Power (W)
1	1.5
2	2
3	2.5
4	3.5

In general, the higher power classification level is associated with higher data rates and longer reach. The system designer is responsible for ensuring that the maximum temperature does not exceed the case temperature requirements.

4.3 ESD

Where ESD performance is not otherwise specified, e.g. in the InfiniBand specification, the QSFP+ module shall meet ESD requirements given in EN61000-4-2, criterion B test specification when installed in a properly grounded cage and chassis. The units are subjected to 15kV air discharges during operation and 8kV direct contact discharges to the case. The QSFP+ module and host high speed signal contacts shall withstand 1000 V electrostatic discharge based on Human Body Model per JEDEC JESD22-A114-B.

The QSFP+ module and all host contacts with exception of the module and host high speed signal contacts shall withstand 2 kV electrostatic discharge based on Human Body Model per JEDEC JESD22-A114-B.

5 Mechanical and Board Definition

5.1 Introduction

The overall module defined in this clause is illustrated in Figure 6. All Pluggable modules and direct attach cable plugs must mate to the connector and cage design defined in this specification. The QSFP+ optical interface shall meet the dimensional specifications of IEC 61754-7 interface 7-3, the MPO adapter interface, and shall optically mate with the plug on the optical fiber cabling. Several cage to bezel options are defined. Both metal spring finger and elastomeric EMI solutions are permitted but must pass customer defined requirements. Heat sink/clip thermal designs are application specific and not specifically defined by this specification, however a general design is given as an example.

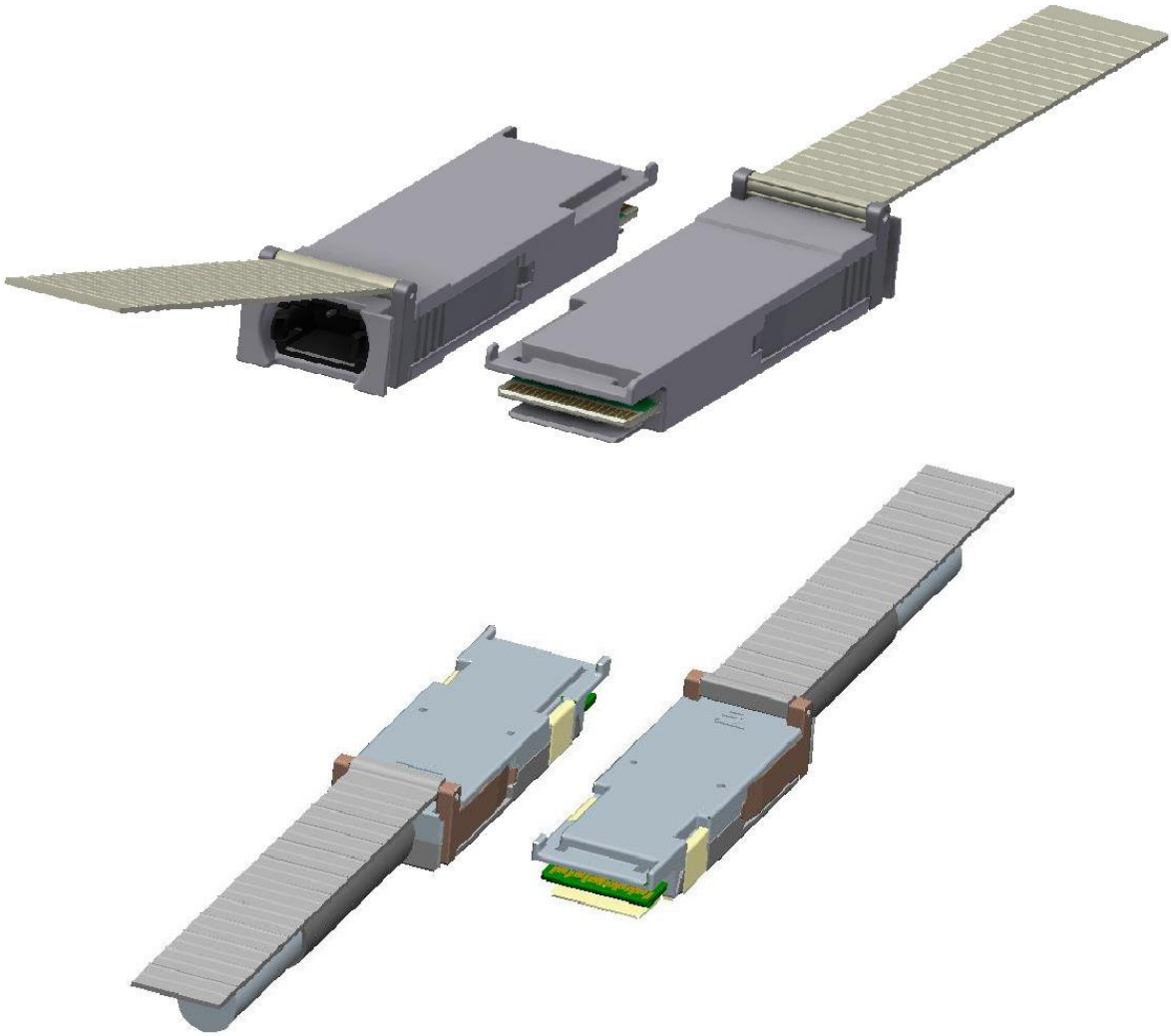

Figure 6 — QSFP+ pluggable and direct attach module rendering

5.2 QSFP+ Datums and Component Alignment

A listing of the datums for the various components is contained in Table 8. The alignments of some of the datums are noted. The relationship of the Module, Cage, and Connector relative to the Host Board and Bezel is illustrated in Figure 7 by the location of the key datums of each of the components. In order to reduce the complexity of the drawings, all dimensions are considered centered unless otherwise specified.

Table 8 — Definition of Datums

Datum	Description
A	Host Board Top Surface
B	Inside surface of bezel
C	**Distance between Connector terminal thru holes on host board
D	*Hard stop on Module
E	**Width of Module
F	Height of Module housing
G	**Width of Module pc board
H	Leading edge of signal contact pads on Module pc board
J	Top surface of Module pc board
K	*Host board thru hole #1 to accept connector guide post
L	*Host board thru hole #2 to accept connector guide post
M	**Width of bezel cut out
N	*Connector alignment pin
P	**Width of inside of cage at EMI gasket (when fully compressed)
R	Height of inside of cage at EMI gasket (when fully compressed)
S	Seating plane of cage on host board
T	*Hard stop on cage
V	Length of heat sink clip
W	Seating surface of the heat sink on the cage
X & Y	Host board horizontal and depth datums
Z	**Width of heat sink surface that fits into clip
AA	**Connector slot width
BB	Seating plane of cage on host board
CC	Length of boss on heat sink that fits inside of the cage
DD	Top surface of connector backshell
*Datums D, K, L, N and T are aligned when assembled (see figure 7) **Centerlines of datums AA, C, E, G, M, P and Z are aligned on the same vertical axis	

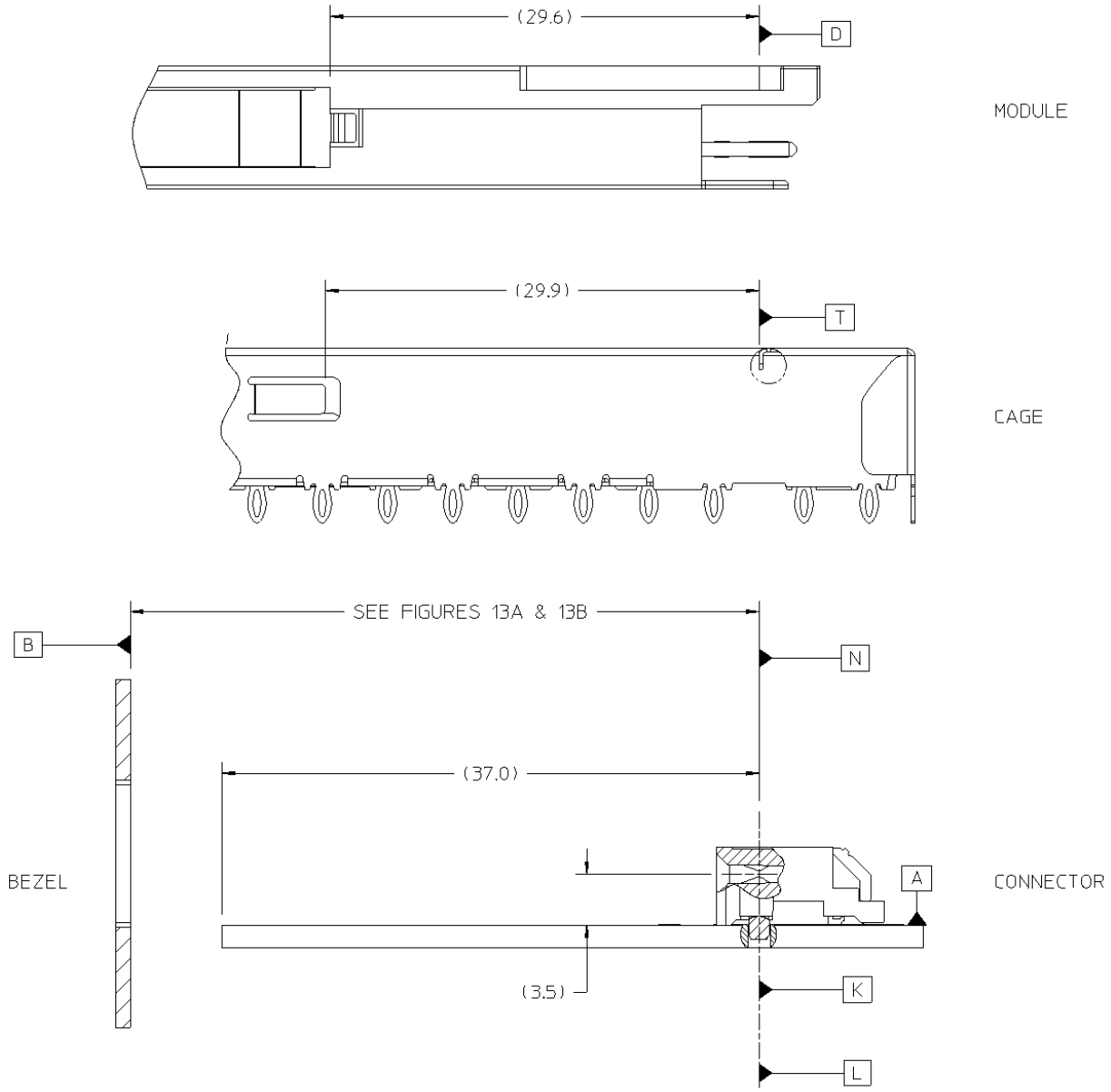

Figure 7 — QSFP+ Datum Alignment, Depth

5.3 QSFP+ Module Mechanical Package Dimensions

A common mechanical outline is used for all QSFP+ Modules and direct attach cables. The preferred method of removing the module from the cage assembly is by a bail type actuation method. The module shall provide a means to self-lock with the cage upon insertion. The package dimensions for the QSFP+ Module are defined in Figure 8 and Figure 9. The dimensions that control the size of the module that extends outside of the cage are listed as maximum dimensions per Note 1 and Note 6 in Figure 8. Note: All dimensions are in mm.

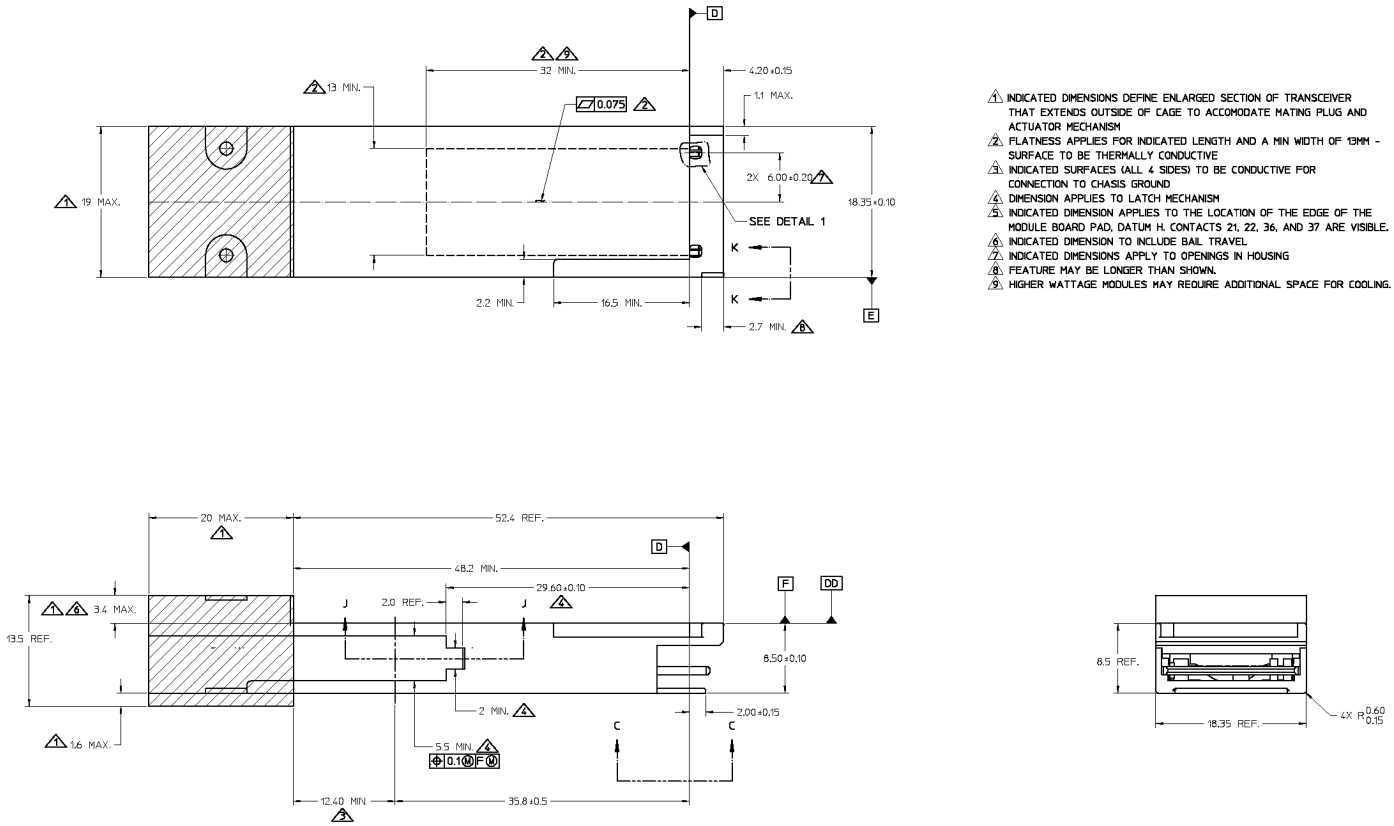

Figure 8 — Drawing of QSFP+ Module

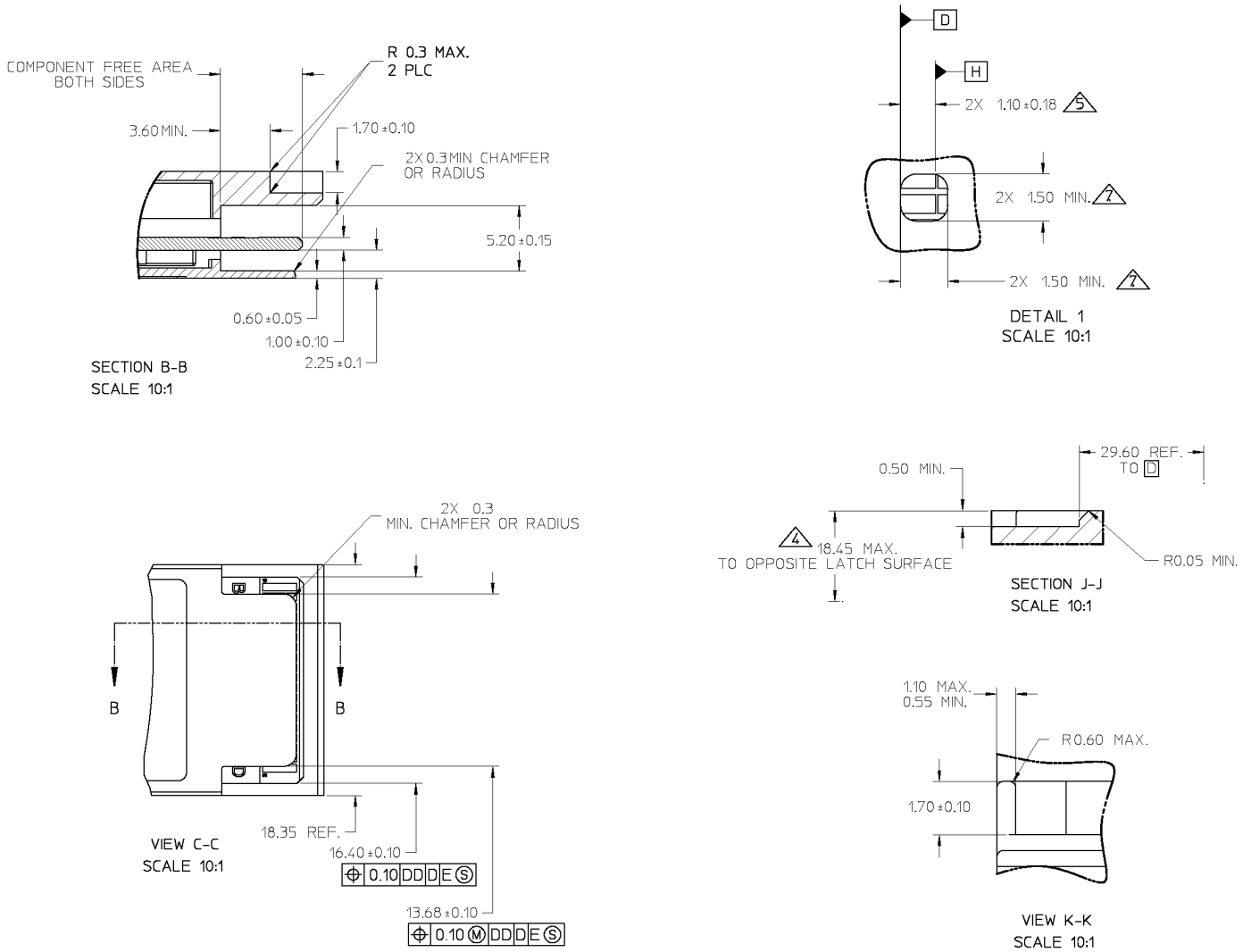

Figure 9 — QSFP+ Module Tab drawings

5.3.1 Mating of QSFP+ Module PCB to QSFP+ Electrical Connector

The QSFP+ Module contains a printed circuit board that mates with the QSFP+ electrical connector. The pads are designed for a sequenced mating:

First mate – ground contacts
Second mate – power contacts
Third mate – signal contacts

The pattern layout for the QSFP+ Printed Circuit Board is shown in Figure 10.

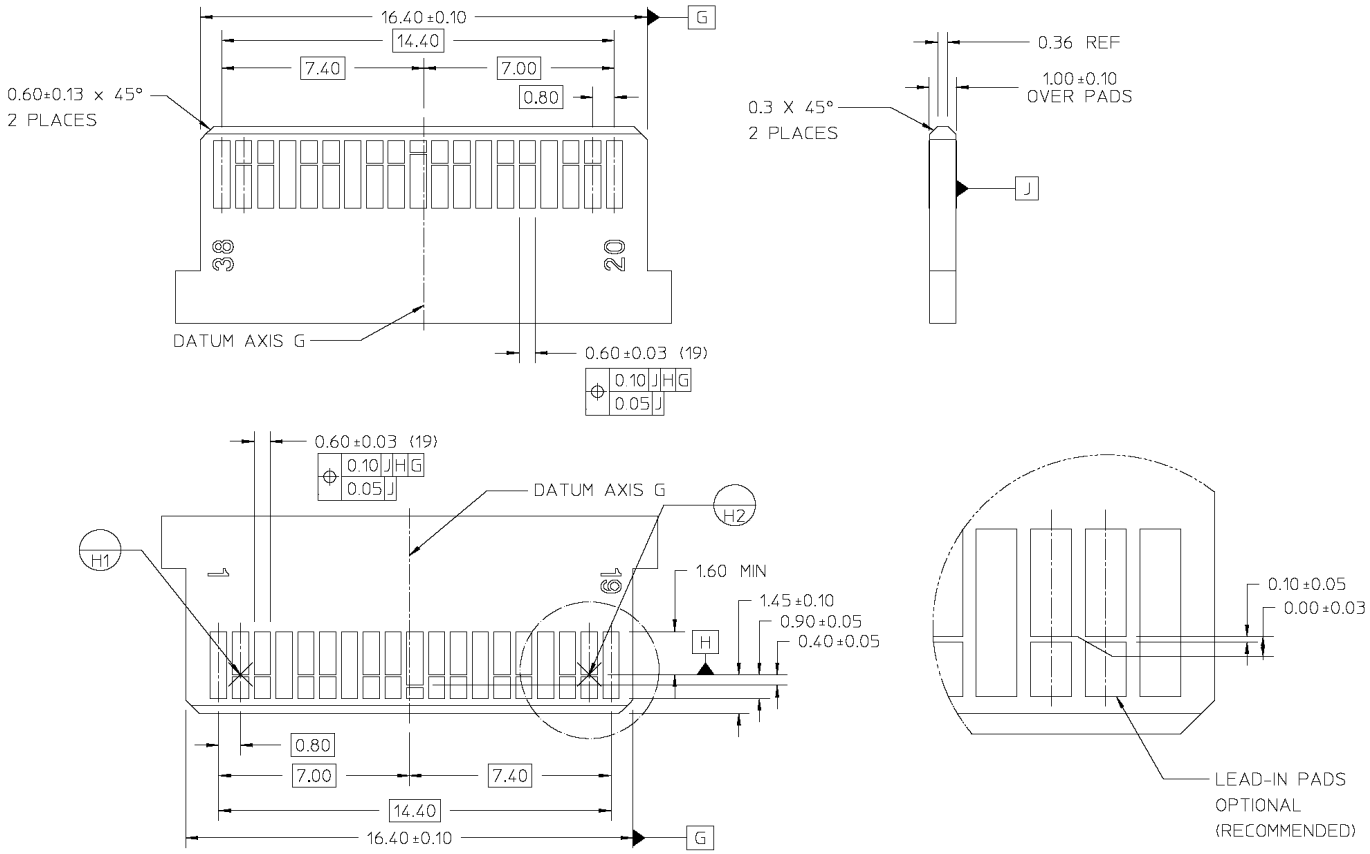

NOTES:
1. CONTACT PAD PLATING
   0.38 MICROMETERS MIN GOLD OVER
   1.27 MICROMETERS MIN NICKEL
2. NO SOLDER MASK WITHIN 0.05 MM OF DEFINED PAD LOCATIONS
3. ALTERNATE CONTACT PAD PLATING
   0.03 MICROMETERS MIN GOLD OVER
   0.30 MICROMETERS MIN PALLADIUM OVER
   1.27 MICROMETERS MIN NICKEL

DATUM H TARGETS ARE DEFINED BY THE RESPECTIVE PAD CENTERLINES AND THE LEADING EDGE OF THE TARGET PADS

Figure 10 — Pattern Layout for QSFP+ Printed Circuit Board

5.4 Host PCB Layout

A typical host board mechanical layout for attaching the QSFP+ Connector and Cage System is shown in Figure 11 and Figure 12. Location of the pattern on the host board is application specific. See Sub-clause 5.6 for details on the location of the pattern relative to the bezel.

To achieve 10 Gb/s performance pad dimensions and associated tolerances must be adhered to and attention paid to the host board layout.

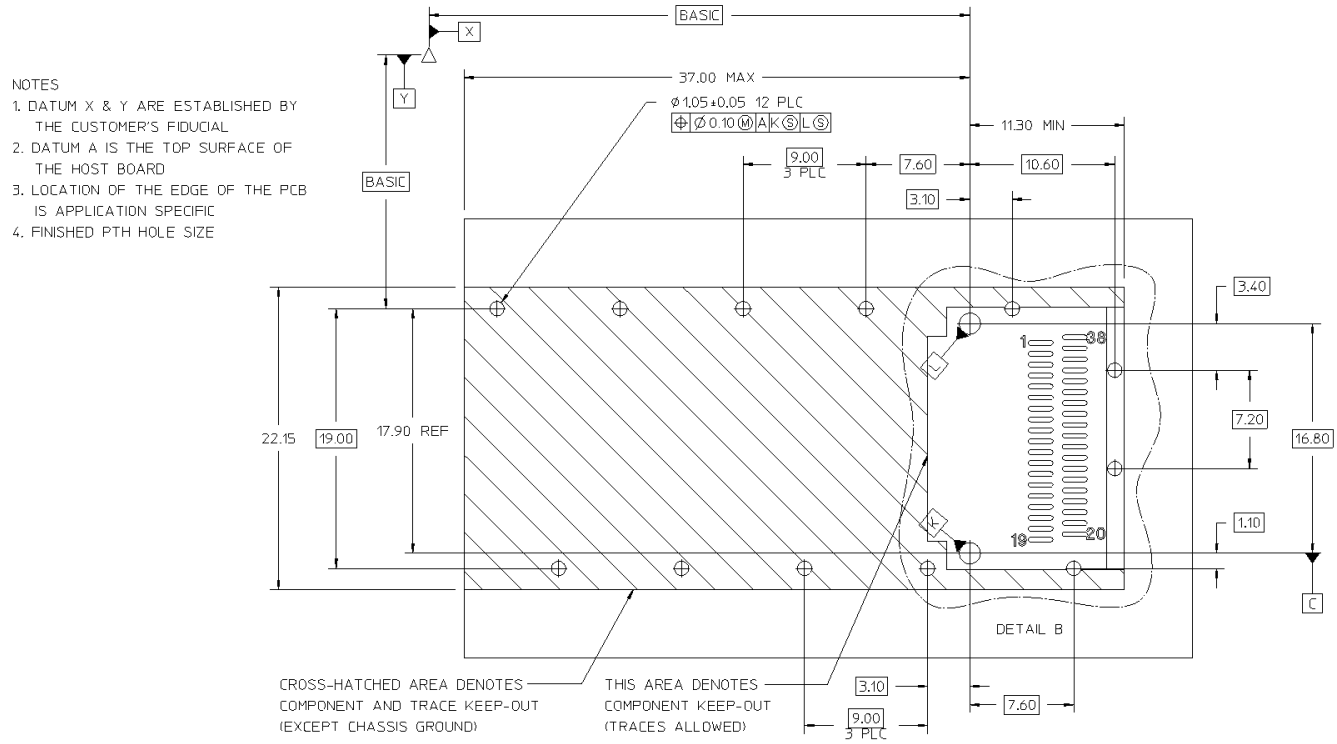

Figure 11 — QSFP+ Host PCB Mechanical Layout

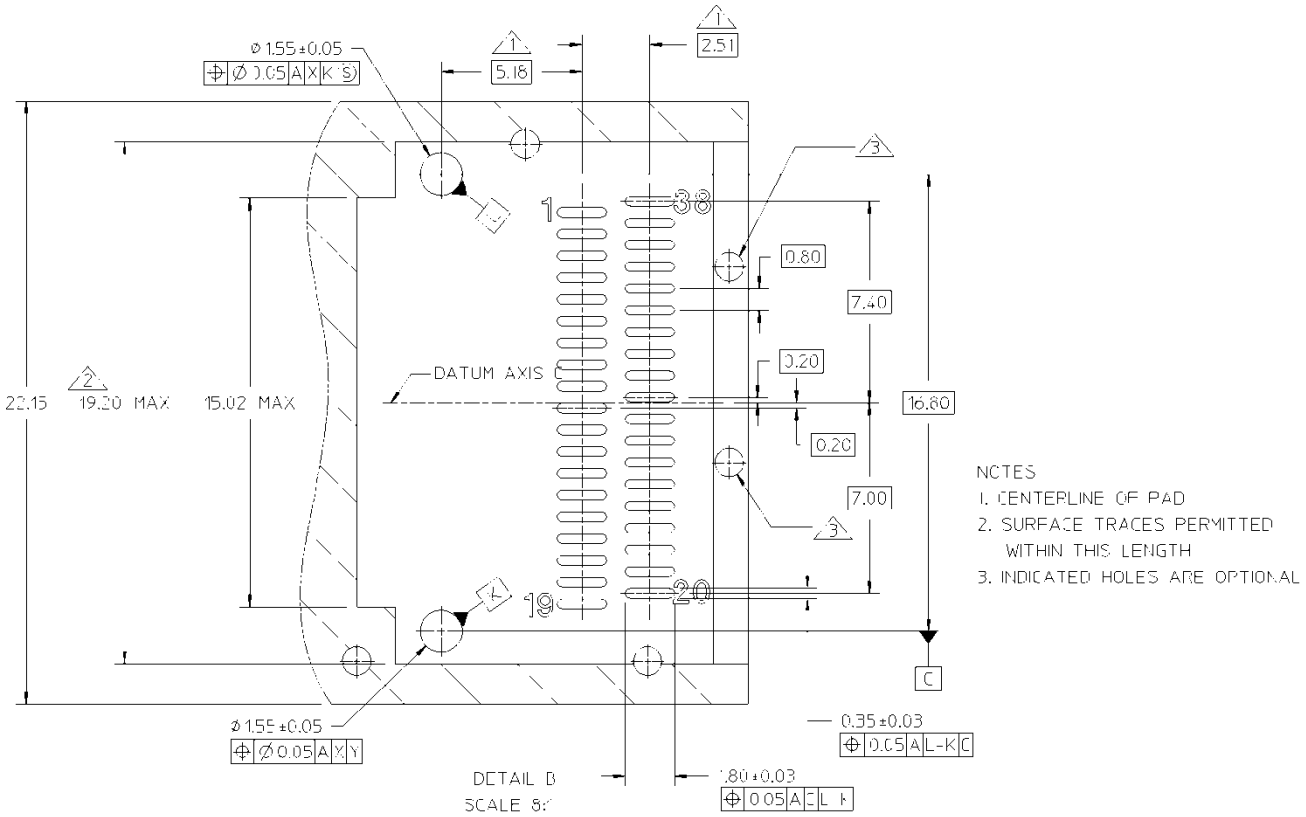

Figure 12 — QSFP+ Host PCB Mechanical Layout, Detail Z

5.4.1 Insertion, Extraction and Retention Forces for QSFP+ Modules

The requirements for insertion forces, extraction forces and retention forces are specified in Table 9. The QSFP+ cage and module design combinations must ensure excessive force applied to a cable does not damage the QSFP+ cage or host connector. If any part is damaged by excessive force, it should be the cable or media module and not the cage or host connector which is part of the host system.

Table 9 — Insertion, Extraction and Retention Forces

Measurement	Min	Max	Units	Comments
QSFP+ Module insertion	0	40	N	
QSFP+ Module extraction	0	30	N	
QSFP+ Module retention	90	N/A	N	No damage to module below 90N
Cage retention (Latch strength)	125	N/A	N	No damage to latch below 125N
Cage retention in Host Board	114	N/A	N	Force to be applied in a vertical direction, no damage to cage
Insertion / removal cycles, connector / cage	100	N/A	Cycles	Number of cycles for the connector and cage with multiple modules.
Insertion / removal cycles, QSFP+ Module	50	N/A	Cycles	Number of cycles for an individual module.

5.5 Color Coding and Labeling of QSFP+ Modules

An exposed feature of the QSFP+ Module (a feature or surface extending outside of the bezel) shall be color coded as follows:

Beige for 850nm
Blue for 1310nm
White for 1550nm

Each QSFP+ Module shall be clearly labeled. The complete labeling need not be visible when the QSFP+ Module is installed and the bottom of the device is the recommended location for the label. Labeling shall include:

Appropriate manufacturing and part number identification
Appropriate regulatory compliance labeling
A manufacturing traceability code

The label should also include clear specification of the external port characteristics such as:

Optical wavelength
Required fiber characteristics
Operating data rate
Interface standards supported
Link length supported

The labeling shall not interfere with the mechanical, thermal or EMI features.

5.6 Bezel for Systems Using QSFP+ Modules

Host enclosures that use QSFP+ devices should provide appropriate clearances between the QSFP+ Modules to allow insertion and extraction without the use of special tools and a bezel enclosure with sufficient mechanical strength. The QSFP+ Module insertion slot should be clear of nearby moldings and covers that might block convenient access to the latching mechanisms, the QSFP+ Module, or the cables that plug directly into the cage.

There are two cage designs defined for use with QSFP+ modules as described in sub-clauses 5.6.1 and 5.6.2. The difference between them is that the front of one cage extends into

or through the opening in the bezel and the other extends up against the back surface of the bezel. While the cage footprint is the same for both designs, its distance from the inside surface of the host bezel may differ depending on gasket selection. The recommended basic dimension from the inside surface of the bezel to Datum K and Datum L on the Host board may be different between designs and is addressed in Figures 13a and 13b.

These designs align with the two versions for cage assemblies as defined in Section 5.8. The minimum recommended host board thickness for belly-to-belly mounting of the assemblies is different for each bezel version as noted in 5.6.1 and 5.6.2.

The bezel thickness range shall be 0.8 mm to 2.6 mm.

5.6.1 Bezel for the Thru Bezel Cage Assembly Version

The front surface of the cage assembly passes through the bezel.

Two EMI solutions may be implemented for this option. If EMI spring fingers are used, they make contact to the inside of the bezel cutouts. If an EMI gasket is used, it makes contact to the inside surface of the bezel. To accept all cage designs, both bezel surfaces must be conductive and connected to chassis ground.

The minimum recommended host board thickness for belly to belly mounting of the connector and cage assemblies is 2.2mm minimum.

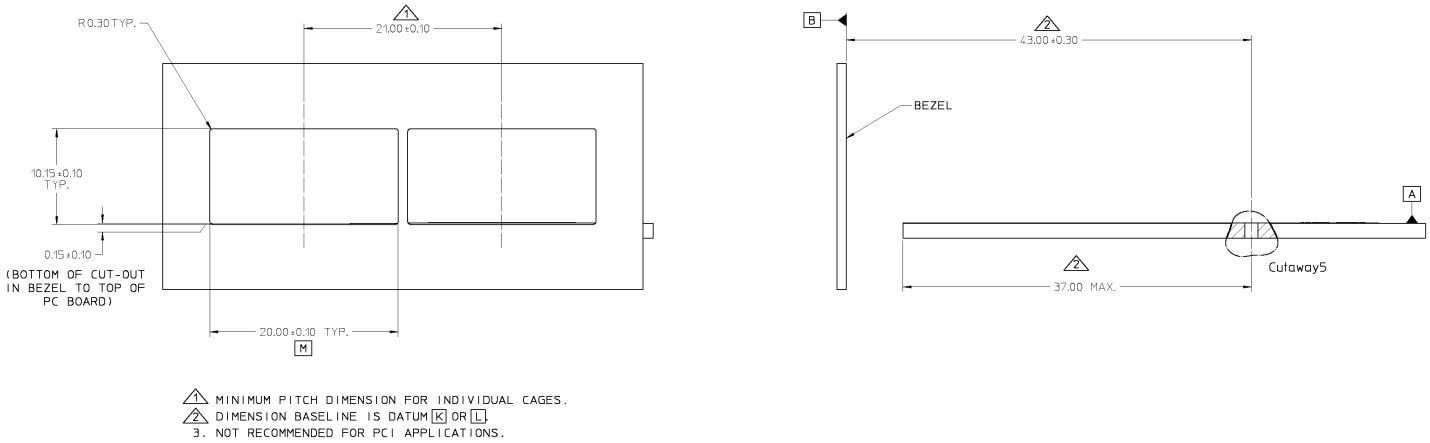

Figure 13A — Recommended Bezel Design for cages that extend into or thru Bezel

5.6.2 Bezel for the Behind the Bezel Cage Assembly Version

There are many options for a bezel EMI gasket that functions as a seal between the bezel and the front of the cage. The design of the bezel EMI gasket and the materials used for the gasket are application specific. The preferred method is to fasten the gasket to the back of the bezel with a pressure sensitive adhesive.

Assembly of the host board to the bezel will compress the gasket to the recommended range specified by the bezel EMI gasket manufacturer. The surface in the back of the bezel that is in contact with the bezel EMI gasket must be low resistance and connected to chassis ground. The minimum recommended host board thickness for belly to belly mounting of the connector and cage assemblies are 2.7mm minimum.

The gasket thickness after compression can be calculated as follows:

GT = BKL - 42.80 +/- 0.25mm.

Where:

• GT is gasket thickness in the compressed state.
• BKL is the distance from the back of the bezel to the centerline of Datums K & L. See Figure 11 and Figure 12 (Note: dimension from front of bezel to centerline of Datums K & L must not exceed 48.25mm).
• The 42.80 +/- 0.25mm dimension is the distance from the front of the cage to the hard stop, Datum T. See Figure 17.

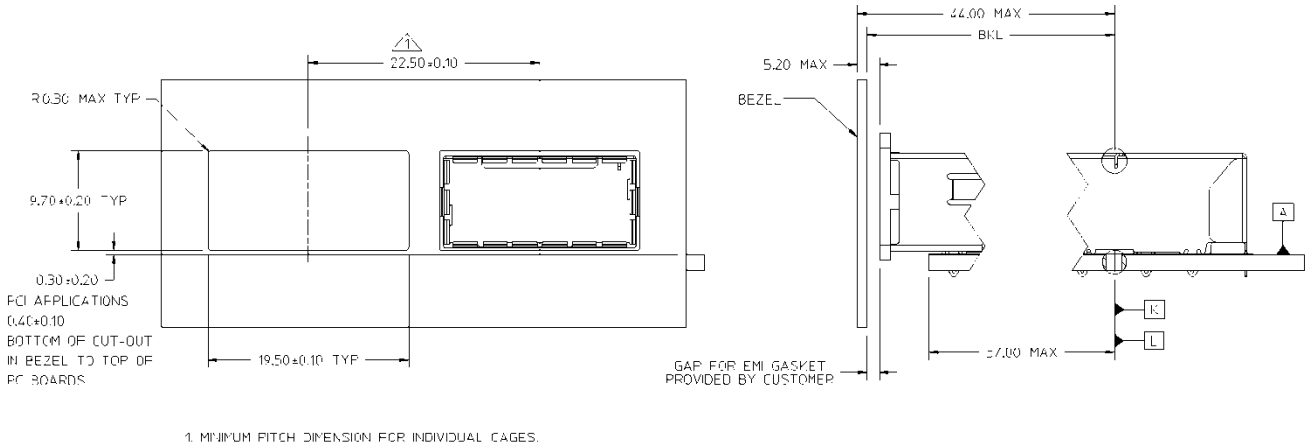

Figure 13B — Recommended Bezel Design for cages that extend up against the inside surface of the Bezel

5.7 QSFP+ Electrical Connector Mechanical

The QSFP+ Connector is a 38-contact, right angle surface mount connector and is shown in Figure 14. The mechanical specifications for the connector are listed in Table 9 and shown in Figure 15.

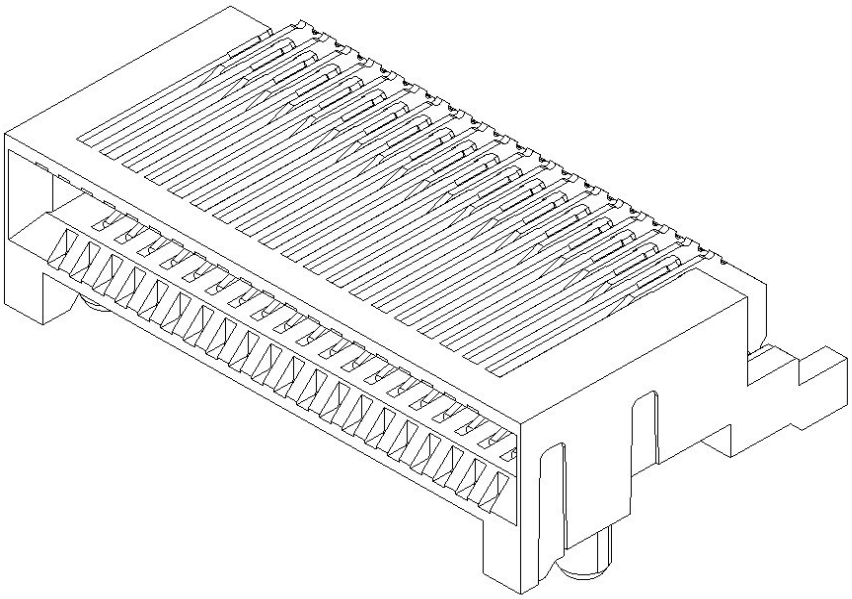

Figure 14 — QSFP+ Module Electrical Connector Illustration

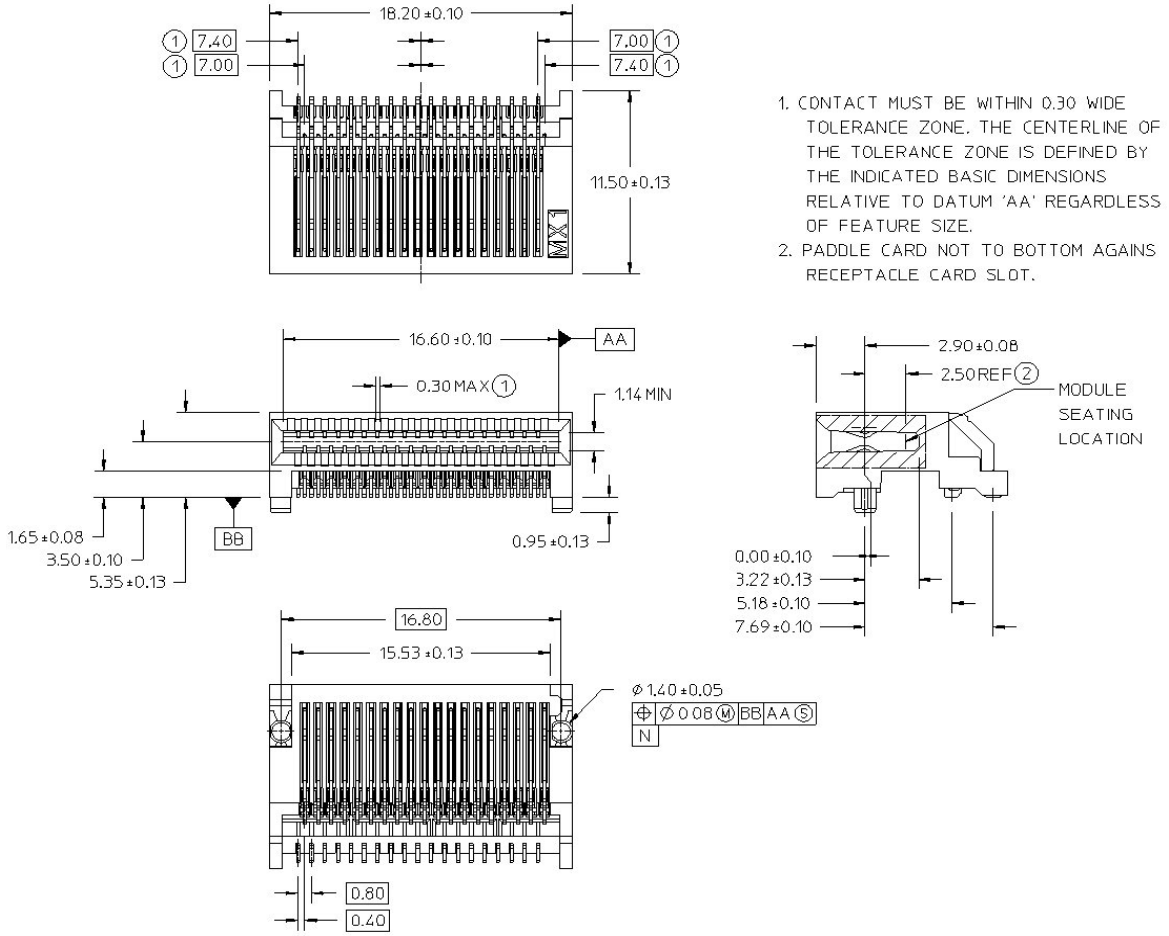

Figure 15 — QSFP+ Electrical Connector Specification

5.8 Individual QSFP+ Cage Assembly Versions

There are two versions for cage assemblies: a Thru Bezel version that passes through the bezel, and a Behind the Bezel version that does not pass through the bezel. An exploded view of both Thru Bezel (left side) and behind the Bezel (right side) cage assemblies is shown schematically in Figure 16.

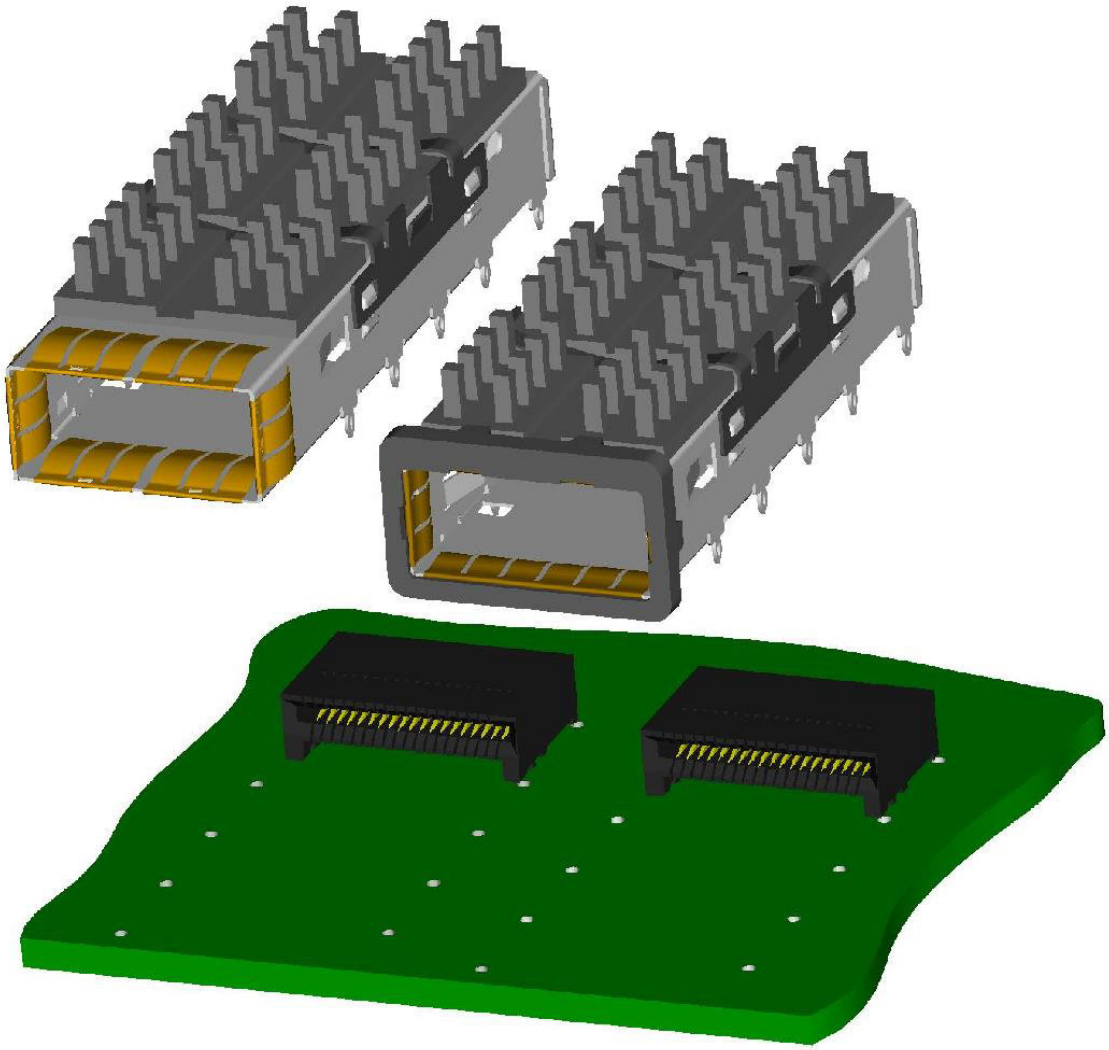

Figure 16 — Thru Bezel (left side) and behind the bezel (right side) Cage and Optional Heat Sink Designs (exploded view)

The cage assembly options are shown in Figure 17.

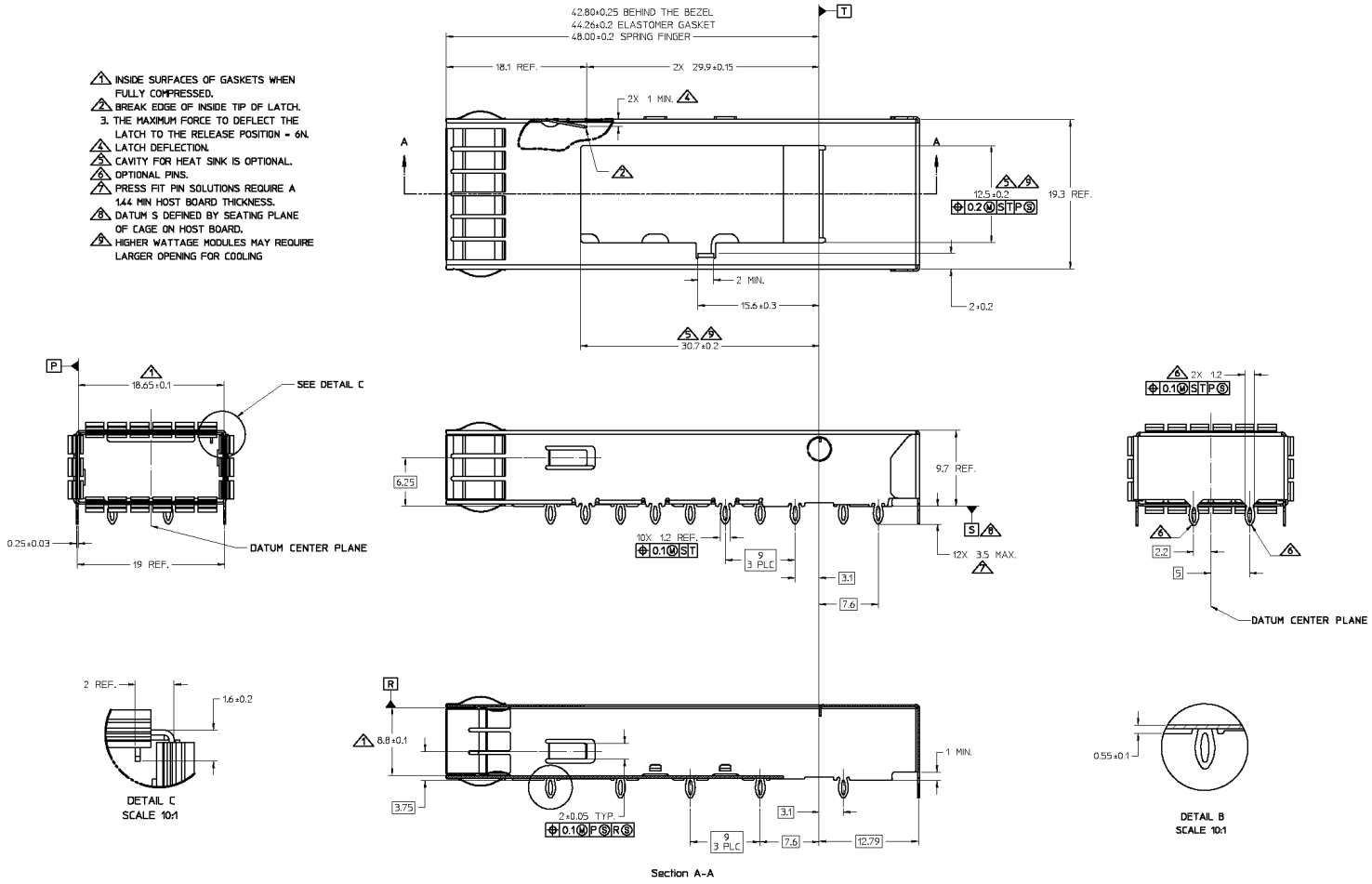

Notes:
1. Inside surfaces of gaskets when fully compressed.
2. Break edge of inside tip of latch.
3. The maximum force to deflect the latch to the release position = 6N.
4. Latch deflection.
5. Cavity for heat sink is optional.
6. Optional pins.
7. Press fit pin solutions require a 1.44 min host board thickness.
8. Datum defined by seating plane of cage on host board.
9. Higher wattage models may require larger opening for cooling

Figure 17 — 1-by-1 Thru Bezel Cage Design

5.8.1 QSFP+ Heat Sink Clip Dimensions

The heat sink clip defined in Figure 18 is for reference only. The design of the heat sink clip, heat sink and their attachment features on the cage assembly are vendor specific and not defined in this document. When fastened to the cage, the clip will provide a minimum force of 5 Newtons at the interface of the heat sink and QSFP+ Module. The clip is designed to permit a heat sink to be fastened into the clip then assembled to the cage and to expand slightly during module insertion in order to maintain a contact force between the module and heat sink.

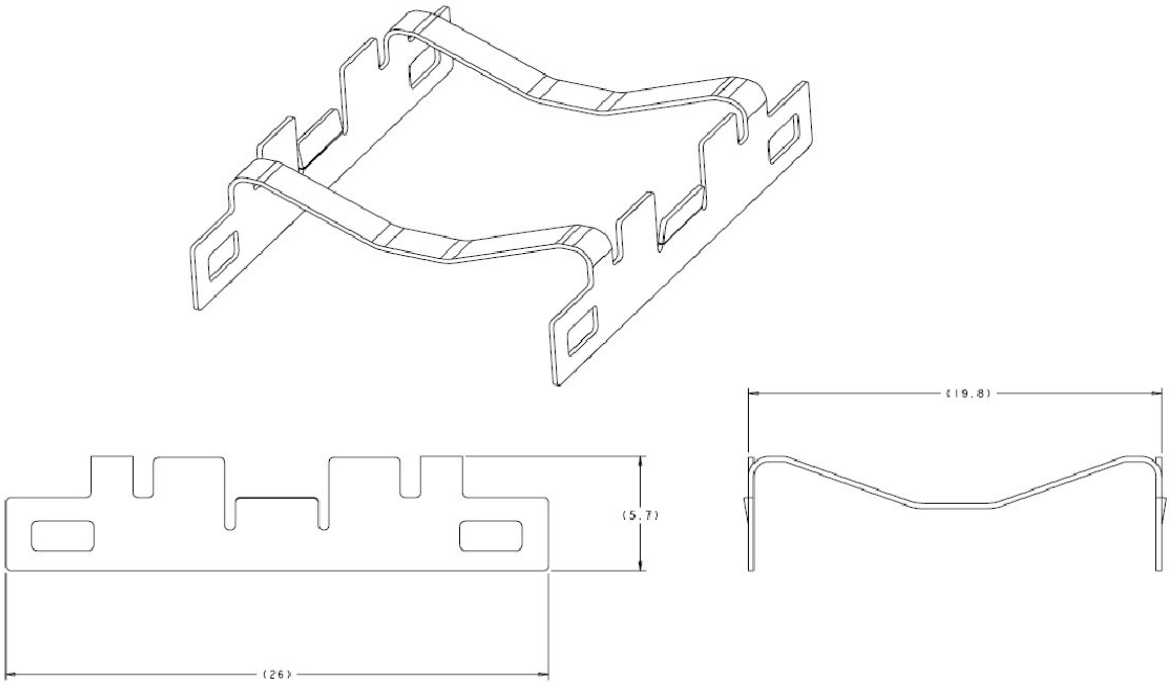

Figure 18 — QSFP+ Heat Sink Clip

5.8.2 QSFP+ Heat Sink Dimensions

The heat sink illustrated in Figure 19 is for reference only. Critical dimensions to ensure that the heat sink will be compatible with the Heat Sink Clip are defined. The configuration of the fins or posts is application specific along with the outside envelope. The heat sink includes a beveled edge which "rides up" the leading edge of the module as the module is inserted into the cage assembly. The recommended material for the heat sink is aluminum and the surface treatment for the module contacting surface can be anodizing or nickel plating.

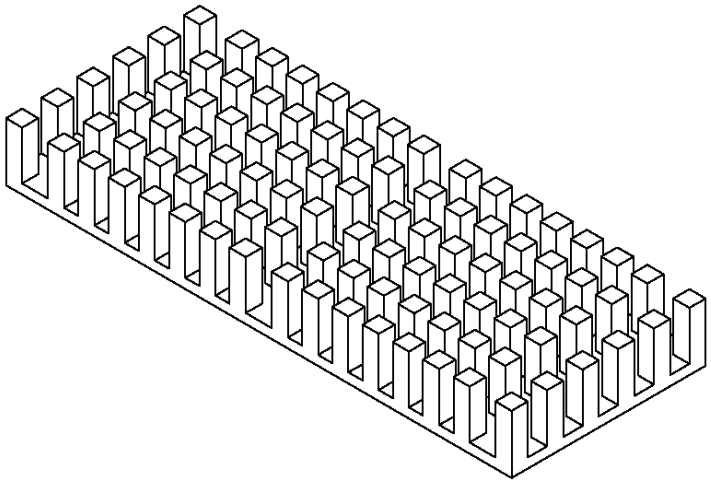

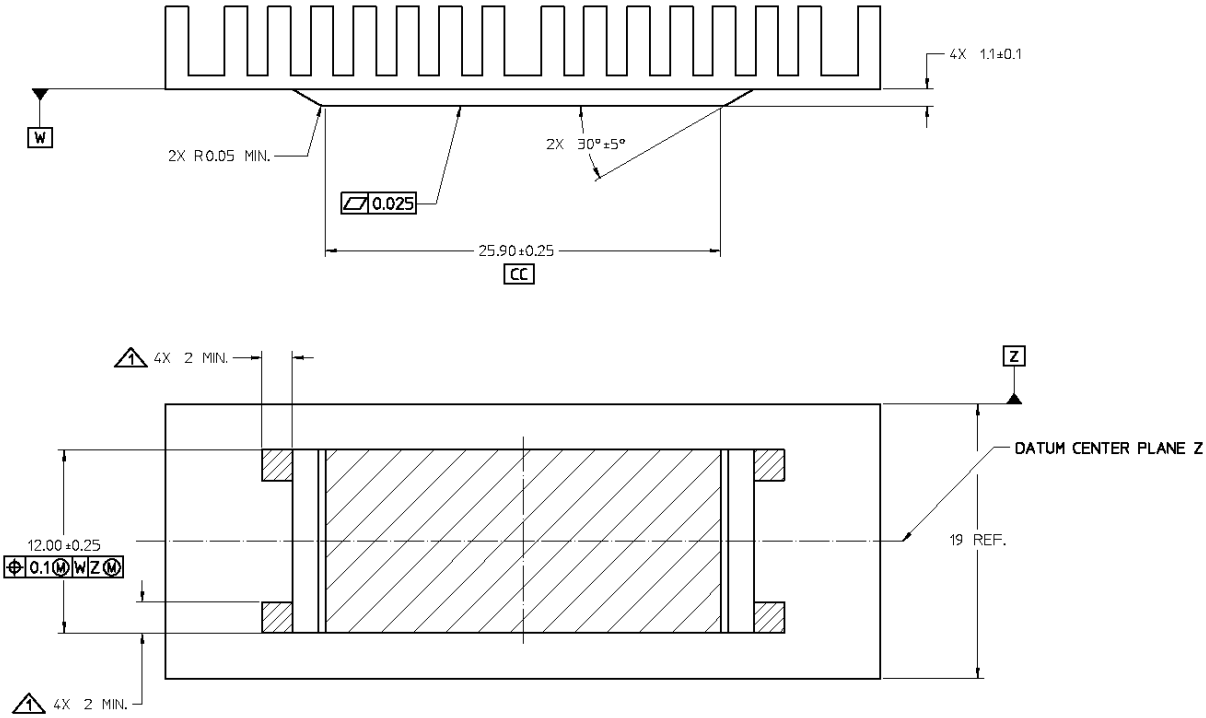

1 PLANE FOR FLATNESS AND HEIGHT MEASUREMENTS ESTABLISHED AT FOUR INDICATED AREAS
2. ALL OTHER DIMENSIONS ARE PER MANUFACTURER DESIGN

Figure 19 — QSFP+ Heat Sink

5.8.3 Light Pipes

The use of light pipes to indicate status of the module is application specific.

5.9 Dust / EMI Cover

In order to prevent contamination of the internal components and to optimize EMI performance, it is recommended that a Dust/EMI Cover be inserted into the cage assembly when no module is present. See Figure 19 for the recommended design. During installation, the front flange on the cover shall be seated against the front surface of the bezel to prevent dust from entering the equipment. The conductivity of the materials should be chosen for the Dust/EMI Cover to block EMI emissions.

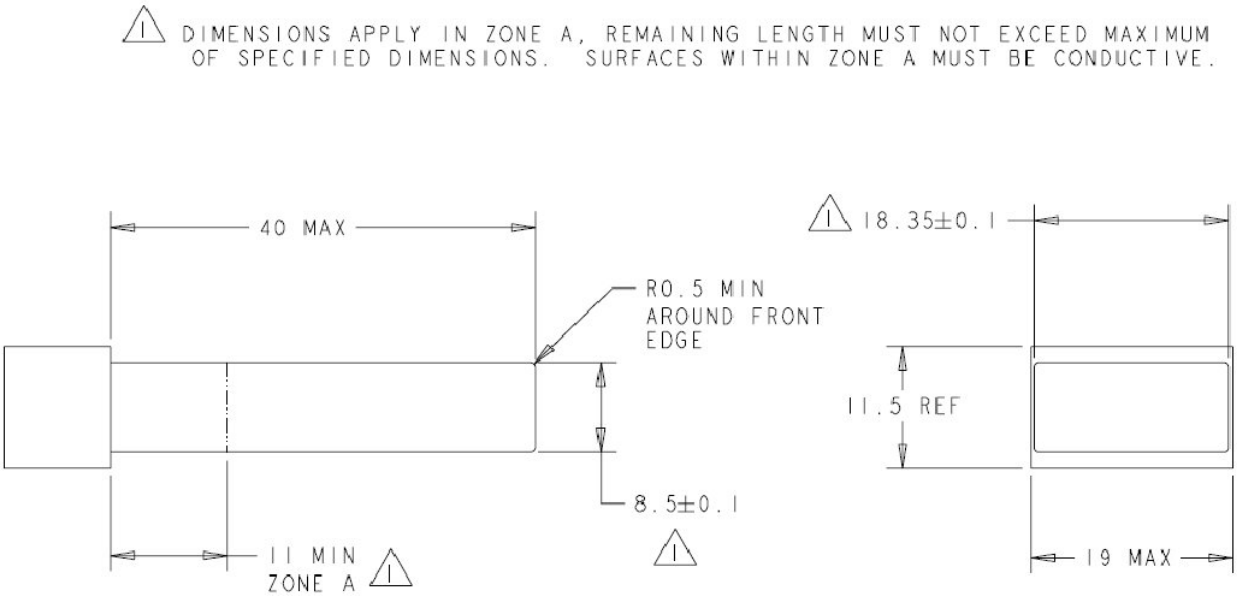

Figure 20 — Dust / EMI Cover

5.10 Optical Interface

The QSFP+ optical interface port shall be either a male MPO connector as specified in IEC 61754-7 (see Figure 21a) or a dual LC as specified in IEC 61754-20 (see Figure 21b).

The four fiber positions on the left as shown in Fig. 20a, with the key up, are used for the optical transmit signals (Channel 1 through 4). The fiber positions on the right are used for the optical receive signals (Channel 4 through 1).

The central four fibers may be physically present.
Two alignment pins are present.

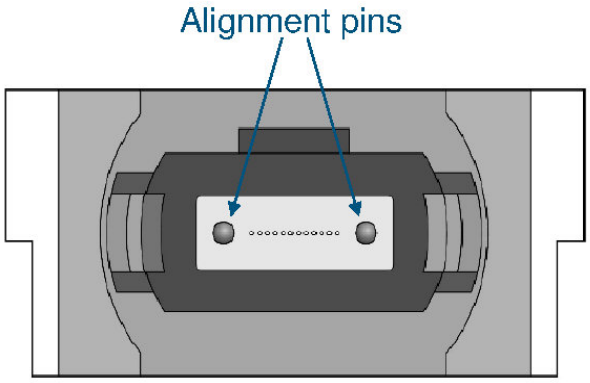

Transmit Channels: 1 2 3 4
Unused positions: x x x x
Receive Channels: 4 3 2 1

Figure 21a – QSFP+ Optical Receptacle and Channel Orientation for MPO connector

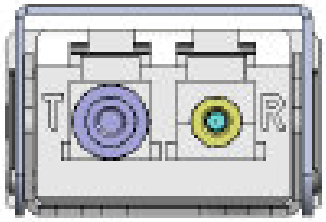

Figure 21b – QSFP+ Optical Receptacle and Channel Orientation for dual LC connector

MPO Optical Cable connection

Aligned key (Type B) MPO patchcords should be used to ensure alignment of the signals between the modules. The aligned key patchcord is defined in TIA-568 and shown in Figure 21c. The optical connector is orientated such that the keying feature of the MPO receptacle is on the top.

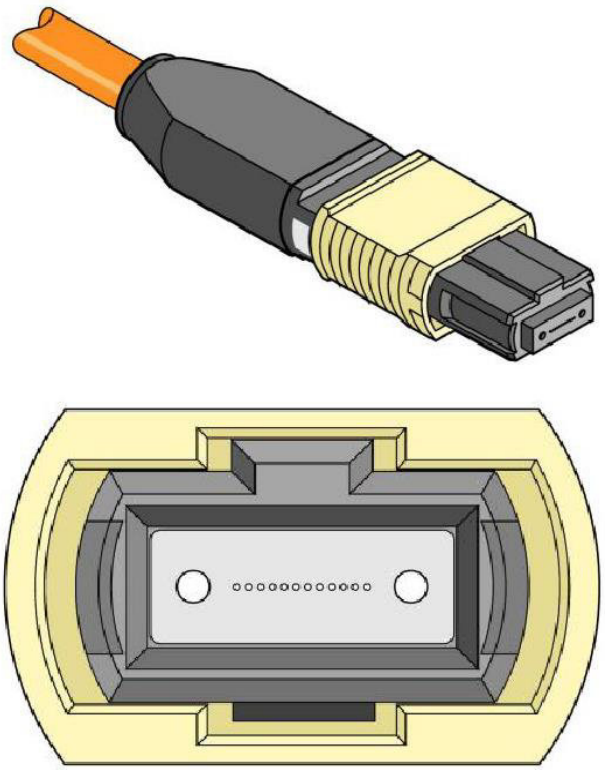

Figure 21c — QSFP+ MPO Optical patchcord

Dual LC Optical Cable connection

The Dual LC optical cable patchcord is defined in TIA/EIA-604-10A and shown in Figure 21d.

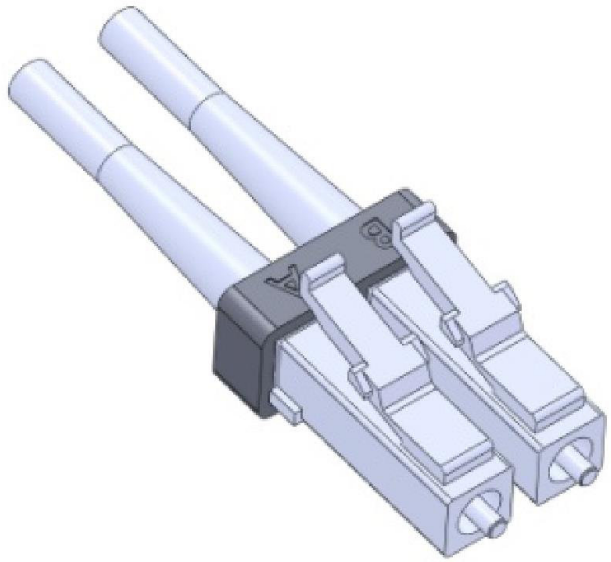

Figure 21d — QSFP+ dual LC Optical patchcord

6 Environmental and Thermal

6.1 Thermal Requirements

The QSFP+ module shall operate within one or more of the case temperatures ranges defined in Table 10. The temperature ranges are applicable between 60m below sea level and 1800m above sea level, (Ref. NEBS GR-63) utilizing the host systems designed airflow.

Table 10 Temperature Range Class of operation

Class	Case Temperature Range
Standard	0 through 70C
Extended	-5 through 85C
Industrial	-40 through 85C

QSFP+ is designed to allow for up to 16 adjacent modules, ganged and/or belly-to-belly, with the appropriate thermal design for cooling / airflow. (Ref. NEBS GR-63)

7 Management Interface

7.1 Introduction

A management interface, as already commonly used in other form factors like GBIC, SFP, and XFP, is specified in order to enable flexible use of the module by the user. The specification has been changed in order to adopt the use of a multi-channel module. Some timing requirements are critical especially for a multi-channel device, so the interface speed has been increased. This QSFP+ specification is based on the INF8438 specification however it is not backward compatible. Address 128 Page00 is used to indicate the use of the QSFP+ memory map rather than the QSFP memory map.

7.2 Timing Specification

7.2.1 Introduction

Low speed signaling is based on Low Voltage CMOS (LVCMOS) operating at Vcc. Hosts shall use a pull-up resistor connected to a Vcc_host on the 2-wire interface SCL (clock) and SDA (Data) signals. Detailed electrical specification is given in Sub-clause 4.1.2. Nomenclature for all registers more than 1 bit long is MSB-LSB.

7.2.2 Management Interface Timing Specification

In order to support a multi-channel device a higher clock rate for the serial interface is considered. The timing requirements are shown in Figure 22 and specified in Table 11. QSFP+ is positioned to leverage 2-wire timing (Fast Mode devices) to align the use of related cores on host ASICs. This subclause closely follows the XFP MSA specification.

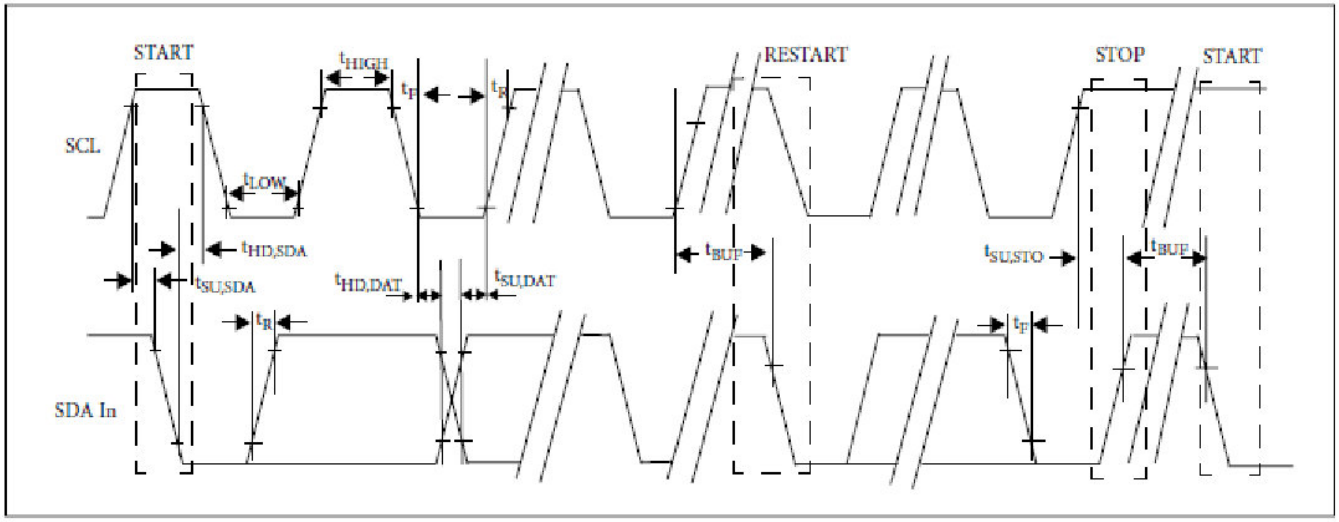

Figure 22 — QSFP+ Timing Diagram

Before initiating a 2-wire serial bus communication, the host shall provide setup time (Host_select_setup -Table 11) on the ModSelL line of all modules on the 2-wire bus. The host shall not change the ModSelL line of any module until the 2-wire serial bus communication is complete and the hold time requirement (Host_select_hold - Table 11) is satisfied. The 2-wire serial interface address of the QSFP+ module is 1010000X (A0h). In order to allow access to multiple QSFP+ modules on the same 2-wire serial bus, the QSFP+ pinout includes a ModSelL or module select pin. This pin (which is pulled high or deselected in the module) must be held low by the host to select the module of interest and allow communication over the 2-wire serial interface. The module must not respond to or accept 2-wire serial bus instructions unless it is selected.

7.2.3 Serial Interface Protocol

The module asserts LOW for clock stretch on SCL.

7.2.3.1 Management Timing Parameters

The timing parameters for the 2-Wire interface to the QSFP+ module are shown in Table 11.

Table 11- Management Interface timing parameters

Parameter	Symbol	Min	Max	Unit	Conditions
Clock Frequency	fSCL	0	400	kHz	
Clock Pulse Width Low	tLOW	1.3		us	
Clock Pulse Width High	tHIGH	0.6		us	
Time bus free before new transmission can start	tBUF	20		us	Between STOP and START and between ACK and ReStart
START Hold Time	tHD.STA	0.6		us	
START Set-up Time	tSU.STA	0.6		us	
Data In Hold Time	tHD.DAT	0		us	
Data in Set-up Time	tSU.DAT	0.1		us	
Input Rise Time (400kHz)	tR.400		300	ns	From (VIL,MAX-0.15) to (VIH, MIN +0.15)
Input Fall Time (400kHz)	tF.400		300	ns	From (VIH,MIN + 0.15) to (VIL,MAX – 0.15)
STOP Set-up Time	tSU.STO	0.6		us	
ModSelL Setup Time	Host_select_setup	2		ms	Setup time on the select lines before start of a host initiated serial bus sequence
ModSelL Hold Time	Host_select_hold	10		us	Delay from completion of a serial bus sequence to changes of Module select status
Aborted sequence – bus release	Deselect _Abort	2		ms	Delay from a host de-asserting ModSelL (at any point in a bus sequence) to the QSFP+ Module releasing SCL and SDA

7.3 Memory Interaction Specifications

QSFP+ memory transaction timings are given in Table 12. Single byte writable memory blocks are given in Table 13. Multiple byte writable memory blocks are defined in Table 14.

Table 12- QSFP+ Memory Specification

Parameter	Symbol	Min	Max	Unit	Conditions
Serial Interface Clock Holdoff "Clock Stretching"	T_clock_hold		500	us	Maximum time the QSFP+ Module may hold the SCL line low before continuing with a read or write operation
Complete Single or Sequential Write	tWR		40	ms	Complete (up to) 4 Byte Write
Endurance (Write Cycles)		50K		cycles	70 ^{0} C

Table 13- Single Byte Writable Memory Block

Page	Address	Volatile or Nonvolatile	Description
A0h	86	Volatile	Control register
A0h	87	Volatile	Rx Rate select register
A0h	88	Volatile	Tx Rate select register
A0h	127	Volatile	Page Select Byte

Table 14- Multiple Byte Writable Memory Block

Address	# Bytes	Volatile/NonVolatile	Description
89-92	4	Volatile	Application select per channel
100-106	7	Volatile	Module Mask
119-122	4	Volatile	Password Change Entry Area (Optional)
123-126	4	Volatile	Password Entry Area (Optional)
128-255	128	Non-Volatile	User Writable memory – Page 02h
225-241	16	Volatile	Vendor Specific Channel Controls– Page 03h
242-253	12	Volatile	Channel Monitor Masks – Page 03h

7.3.1 Timing for Soft Control and Status Functions

Timing for QSFP+ soft control and status functions are described in Table 15.

Table 15- Timing for QSFP+ soft control and status functions

Parameter	Symbol	Max	Unit	Conditions
Initialization time	t_init	2000	ms	Time from power on[2] , hot plug or rising edge of reset until the module is fully functional[3] This time does not apply to non-Power level 0 modules in Low Power State
Reset Init Assert Time	t_reset_init	2	us	A Reset is generated by a low level longer than the minimum reset pulse time present on the ResetL pin
Serial Bus Hardware Ready Time	t_serial	2000	ms	Time from power on[2] until module responds to data transmission over the 2-wire serial bus
Monitor Data Ready Time	t_data	2000	ms	Time from power on[2] to data not ready, bit 0 of Byte 2, deasserted and IntL asserted
Reset Assert Time	t_reset	2000	ms	Time from rising edge on the ResetL pin until the module is fully functional[3]
LPMode Assert Time	ton_LPMode	100	us	Time for assertion of LPMode (Vin: LPMode=Vih)until module power consumption reaches Power Level 1.
LPMode Deassert Time	Toff_LPMode	300	ms	Time for deassertion of LPMode (Vin: LPMode=Vil) until module is fully functional[3],[5]
IntL Assert Time	ton_IntL	200	ms	Time from occurrence of condition triggering IntL until Vout:IntL=Vol
IntL Deassert Time	toff_IntL	500	us	Time from clear on read[4] operation of associated flag until Vout:IntL=Voh. This includes deassert times for Rx LOS, Tx Fault and other flag bits.
Rx LOS Assert Time	ton_los	100	ms	Time from Rx LOS state to Rx LOS bit set (value = 1b) and IntL asserted.
Tx Fault Assert Time	ton_Txfault	200	ms	Time from Tx Fault state to Tx Fault bit set (value=1b) and IntL asserted.
Flag Assert Time	ton_flag	200	ms	Time from occurrence of condition triggering flag to associated flag bit set (value=1b) and IntL asserted.
Mask Assert Time	ton_mask	100	ms	Time from mask bit set (value=1b)[1] until associated IntL assertion is inhibited
Mask Deassert Time	toff_mask	100	ms	Time from mask bit cleared (value=0b)[1] until associated IntL operation resumes
Application or Rate Select Change Time	t_ratesel	100	ms	Time from change of state of Application or Rate Select bit[1] until transmitter or receiver bandwidth is in conformance with appropriate specification
Power_override or Power_set Assert Time	ton_Pdown	100	ms	Time from P_Down bit set (value = 1b)[1] until module power consumption reaches Power Level 1
Power_override or Power_set Deassert Time	toff_Pdown	300	ms	Time from P_Down bit cleared (value = 0b)[1] until the module is fully functional[3]
Note 1. Measured from falling clock edge after stop bit of write transaction				
Note 2. Power on is defined as the instant when supply voltages reach and remain at or above the minimum level specified in Table 6				
Note 3. Fully functional is defined as IntL asserted due to data not ready bit, bit 0 byte 2, deasserted. The module should also meet optical and electrical specifications.				
Note 4. Measured from falling clock edge after stop bit of read transaction				
Note 5. Does not apply to power level 1 modules				

Squelch and disable timings are defined in Table 16.

Table 16 - I/O Timing for Squelch & Disable

Parameter	Symbol	Max	Unit	Conditions
Rx Squelch Assert Time	ton_Rxsq	80	us	Time from loss of Rx input signal until the squelched output condition is reached. See Subclause 4.1.3.1.
Rx Squelch Deassert Time	toff_Rxsq	80	us	Time from resumption of Rx input signals until normal Rx output condition is reached. See subclause 4.1.3.1.
Tx Squelch Assert Time	ton_Txsq	400	ms	Time from loss of Tx input signal until the squelched output condition is reached. See subclause 4.1.3.2.
Tx Squelch Deassert Time	toff_Txsq	400	ms	Time from resumption of Tx input signals until normal Tx output condition is reached. See subclause 4.1.3.2.
Tx Disable Assert Time	ton_txdis	100	ms	Time from Tx Disable bit set (value = 1b)[1] until optical output falls below 10% of nominal
Tx Disable Deassert Time	toff_txdis	400	ms	Time from Tx Disable bit cleared (value = 0b)[1] until optical output rises above 90% of nominal
Rx Output Disable Assert Time	ton_rxdis	100	ms	Time from Rx Output Disable bit set (value = 1b)[1] until Rx output falls below 10% of nominal
Rx Output Disable Deassert Time	toff_rxdis	100	ms	Time from Rx Output Disable bit cleared (value = 0b)[1] until Rx output rises above 90% of nominal
Squelch Disable Assert Time	ton_sqdis	100	ms	This applies to Rx and Tx Squelch and is the time from bit set (value = 0b)[1] until squelch functionality is disabled.
Squelch Disable Deassert Time	toff_sqdis	100	ms	This applies to Rx and Tx Squelch and is the time from bit cleared (value = 0b)[1] until squelch functionality is enabled
Note 1: Measured from falling clock edge after stop bit of write transaction				

7.4 Device Addressing and Operation

Serial Clock (SCL): The host supplied SCL input to QSFP+ Modules is used to positive-edge clock data into each QSFP+ device and negative-edge clock data out of each device. The SCL line may be pulled low by a QSFP+ module during clock stretching.

Serial Data (SDA): The SDA pin is bi-directional for serial data transfer. This pin is open-drain or open-collector driven and may be wire-ORed with any number of open-drain or open collector devices. Master/Slave: QSFP+ Modules operate only as slave devices. The host must provide a bus master for SCL and initiate all read/write communication.

Device Address: Each QSFP+ is hard wired at the device address A0h. See Subclause 7.6 for memory structure within each Module.

Multiple Devices per SCL/SDA: While QSFP+ Modules are compatible with point-to-point SCL/SDA, they can share a single SCL/SDA bus by using the QSFP+ ModSelL line. See Subclause 4.1.1.1,Subclause 4.1.2 and Table 3 for more information.

Clock and Data Transitions: The SDA pin is normally pulled high with an external device. Data on the SDA pin may change only during SCL low time periods. Data changes during SCL high periods indicate a START or STOP condition. All addresses and data words are serially transmitted to and from the QSFP+ in 8-bit words.

Every byte on the SDA line must be 8-bits long. Data is transferred with the most significant bit (MSB) first. START Condition: A high-to-low transition of SDA with SCL high is a START condition, which must precede any other command.

STOP Condition: A low-to-high transition of SDA with SCL high is a STOP condition. Acknowledge: After sending each 8-bit word, the transmitter releases the SDA line for one bit time, during which the receiver is allowed to pull SDA low (zero) to acknowledge (ACK) that it has received each word.

Device address bytes and write data bytes initiated by the host shall be acknowledged by QSFP+ Modules. Read data bytes transmitted by QSFP+ Modules shall be acknowledged by the host for all but the final byte read, for which the host shall respond with a STOP instead of an ACK.

Memory (Management Interface) Reset: After an interruption in protocol, power loss or system reset the QSFP+ management interface can be reset. Memory reset is intended only to reset the QSFP+ Module management interface (to correct a hung bus). No other module functionality is implied.

1) Clock up to 9 cycles.
2) Look for SDA high in each cycle while SCL is high.
3) Create a START condition as SDA is high

Device Addressing: QSFP+ devices require an 8-bit device address word following a start condition to enable a read or write operation. The device address word consists of a mandatory sequence for the first seven most significant bits in Figure 23. This is common to all QSFP+ devices.

1	**0**	**1**	**0**	**0**	**0**	**0**	**R/W**
MSB							**LSB**

Figure 23 – QSFP+ Device Address

The eighth bit of the device address is the read/write operating select bit. A read operation is initiated if this bit is set high and a write operation is initiated if this bit is set low. Upon compare of the device address (with ModSelL in the low state) the QSFP+ Module shall output a zero (ACK) on the SDA line to acknowledge the address.

7.5 Read/Write Functionality

7.5.1 QSFP+ Memory Address Counter (Read AND Write Operations)

QSFP+ devices maintain an internal data word address counter containing the last address accessed during the latest read or write operation, incremented by one. The address counter is incremented whenever a data word is received or sent by the module. This address stays valid between operations as long as QSFP+ power is maintained. The address "roll over" during read and writes operations is from the last byte of the 128-byte memory page to the first byte of the same page.

7.5.2 Read Operations

7.5.2.1 Current Address Read

A current address read operation requires only the device address read word (10100001) be sent, see Figure 24.

		<-- QSFP+ ADDRESS --->																		
HOST	**START**	**MSB**						**LSB**	**READ**										**NACK**	**STOP**
		1	**0**	**1**	**0**	**0**	**0**	**0**	**1**	**0**	**x**	**x**	**x**	**x**	**x**	**x**	**x**	**x**	**1**	
QSFP+										**ACK**	**MSB**							**LSB**		
											<---- DATA WORD ----->									

Figure 24 - QSFP+ Current Address Read Operation

Once acknowledged by the QSFP+, the current address data word is serially clocked out. The host does not respond with an acknowledge, but does generate a STOP condition once the data word is read.

7.5.2.2 Random Read

A random read operation requires a "dummy" write operation to load in the target byte address as shown in Figure 25. This is accomplished by the following sequence.

		<- QSFP+ ADDRESS ->									<- MEMORY ADDRESS ->								
HOST	START	MSB						LSB	WRITE		MSB							LSB	
		1	0	1	0	0	0	0	0	0	x	x	x	x	x	x	x	x	0
QSFP+										ACK									ACK
Begin Figure 25																			

	<- QSFP+ ADDRESS ->																		
START	MSB						LSB	READ										NACK	STOP
	1	0	1	0	0	0	0	1	0	x	x	x	x	x	x	x	x	1	
									ACK	MSB							LSB		
										<---- DATA WORD n---->									
Figure 25 End																			

Figure 25 — QSFP+ Random Read

The target 8-bit data word address is sent following the device address write word (10100000) and acknowledged by the QSFP+. The host then generates another START condition (aborting the dummy write without incrementing the counter) and a current address read by sending a device read address (10100001). The QSFP+ acknowledges the device address and serially clocks out the requested data word. The host does not respond with an acknowledge, but does generate a STOP condition once the data word is read.

7.5.2.3 Sequential Read

Sequential reads are initiated by either a current address read Figure 26 or a random address read Figure 27. To specify a sequential read, the host responds with an acknowledge (instead of a STOP) after each data word. As long as the QSFP+ receives an acknowledge, it shall serially clock out sequential data words. The sequence is terminated when the host responds with a NACK and a STOP instead of an acknowledge.

		<- QSFP+ ADDRESS ->																	
HOST	**START**	**MSB**						**LSB**	**READ**										**ACK**
		1	**0**	**1**	**0**	**0**	**0**	**0**	**1**	**0**	**x**	**x**	**x**	**x**	**x**	**x**	**x**	**x**	**0**
QSFP+										**ACK**	**MSB**							**LSB**	
											<---- DATA WORD n----->								
Begin Figure 26																			

								ACK									**NACK**	**STOP**
x	**x**	**x**	**x**	**x**	**x**	**x**	**x**	**0**	**x**	**x**	**x**	**x**	**x**	**x**	**x**	**x**	**1**	
MSB							**LSB**		**MSB**							**LSB**		
<-- DATA WORD n+1 --->									**<-- DATA WORD n+x --->**									
																		Figure 26 End

Figure 26 — Sequential Address Read Starting at QSFP+ Current Address

7.5.2.4 Sequential Read from Random Start Address

		<- QSFP+ ADDRESS ->									<- MEMORY ADDRESS ->								
HOST	START	MSB						LSB	WRITE		MSB							LSB	
		1	0	1	0	0	0	0	0	0	x	x	x	x	x	x	x	x	0
QSFP+										ACK									ACK
Begin Figure 27																			

	<- QSFP+ ADDRESS ->																	
START	MSB						LSB	READ										ACK
	1	0	1	0	0	0	0	1	0	x	x	x	x	x	x	x	x	0
									ACK	MSB							LSB	
										<---- DATA WORD n---->								
Figure 27 Middle																		

								ACK									NACK	STOP
x	x	x	x	x	x	x	x	0	x	x	x	x	x	x	x	x	1	
MSB							LSB		MSB							LSB		
<-- DATA WORD n+1 --->									<-- DATA WORD n+x --->									
Figure 27 End																		

Figure 27 — Sequential Address Read Starting with Random QSFP+ Read

7.5.3 Write Operations

7.5.3.1 BYTE Write

A write operation requires an 8-bit data word address following the device address write word (10100000) and acknowledgement, see Figure 28.

		<- QSFP+ ADDRESS ->									<- MEMORY ADDRESS ->																		
HOST	START	MSB						LSB	WRITE		MSB							LSB											STOP
		1	0	1	0	0	0	0	0	0	x	x	x	x	x	x	x	x	0	x	x	x	x	x	x	x	x	0	
QSFP+										ACK									ACK	MSB							LSB	ACK	
																				<- DATA WORD ->									

Figure 28 - QSFP+ Write Byte Operation

Upon receipt of this address, the QSFP+ shall again respond with a zero (ACK) to acknowledge and then clock in the first 8-bit data word. Following the receipt of the 8-bit data word, the QSFP+ shall output a zero (ACK) and the host master must terminate the write sequence with a STOP condition for the write cycle to begin. If a START condition is sent in place of a STOP condition (i.e. a repeated START per the 2-wire interface specification) the write is aborted and the data received during that operation is discarded. Upon receipt of the proper STOP condition, the QSFP+ enters an internally timed write cycle, tWR, to internal memory. The QSFP+ disables its management interface input during this write cycle and shall not respond or acknowledge subsequent commands until the write is complete. Note that 2-wire interface “Combined Format” using repeated START conditions is not supported on QSFP+ write commands.

7.5.3.2 Sequential Write

QSFP+'s shall support up to a 4 sequential byte write without repeatedly sending QSFP+ address and memory address information as shown in Figure 29.

		<- QSFP+ ADDRESS ->									<- MEMORY ADDRESS ->								
HOST	START	MSB						LSB	WRITE		MSB							LSB	
		1	0	1	0	0	0	0	0	0	x	x	x	x	x	x	x	x	0
QSFP+										ACK									ACK
Begin Figure 29																			

								ACK									ACK
x	x	x	x	x	x	x	x	0	x	x	x	x	x	x	x	x	0
MSB							LSB		MSB							LSB	
<--- DATA WORD 1 --->									<--- DATA WORD 2 ---->								
Figure 29 Middle																	

								ACK										STOP
x	x	x	x	x	x	x	x	0	x	x	x	x	x	x	x	x	0	
MSB							LSB		MSB							LSB	ACK	
<--- DATA WORD 3 --->									<--- DATA WORD 4 ---->									
Figure 29 End																		

Figure 29 - QSFP+ Sequential Write Operation

A "sequential" write is initiated the same way as a single byte write, but the host master does not send a stop condition after the first word is clocked in. Instead, after the QSFP+ acknowledges receipt of the first data word, the host can transmit up to three more data words. The QSFP+ shall send an acknowledge after each data word received. The host must terminate the sequential write sequence with a STOP condition or the write operation shall be aborted and data discarded. Note that 2-wire interface "combined format" using repeated START conditions is not supported on QSFP+ write commands.

7.5.3.3 Acknowledge Polling

Once the QSFP+ internally timed write cycle has begun (and inputs are being ignored on the bus) acknowledge polling can be used to determine when the write operation is complete. This involves sending a START condition followed by the device address word. Only if the internal write cycle is complete shall the QSFP+ respond with an acknowledge to subsequent commands, indicating read or write operations can continue.

7.6 QSFP+ Memory Map

This subclause defines the Memory Map for QSFP+ Module used for serial ID, digital monitoring and certain control functions. The interface is mandatory for all QSFP+ devices. The interface has been designed largely after the XFP MSA as defined in INF-8077i Rev.4.0. The memory map has been changed in order to accommodate 4 optical channels and limit the required memory space. The single address approach is used as found in XFP. Paging is used in order to enable time critical interactions between host and Module.

The structure of the memory is shown in Figure 30. The memory space is arranged into a lower, single page, address space of 128 bytes and multiple upper address space pages. This structure permits timely access to addresses in the lower page, e.g. Interrupt Flags and Monitors. Less time critical entries, e.g. serial ID information and threshold settings, are available with the Page Select function. The structure also provides address expansion by adding additional upper pages as needed. For example, in Figure 30 upper pages 01 and 02 are optional. Upper page 01 allows implementation of Application Select Table, and upper page 02 provides user read/write space. The lower page and upper page 00 are always implemented. Page 03 is required if byte 2, bit 2 in the lower page is low. See Table 39 for details regarding declaration of optional upper pages 01 and 02.

The interface address used is A0xh and is mainly used for time critical data like interrupt handling in order to enable a “one-time-read” for all data related to an interrupt situation. After an Interrupt, IntL, has been asserted, the host can read out the flag field to determine the effected channel and type of flag.

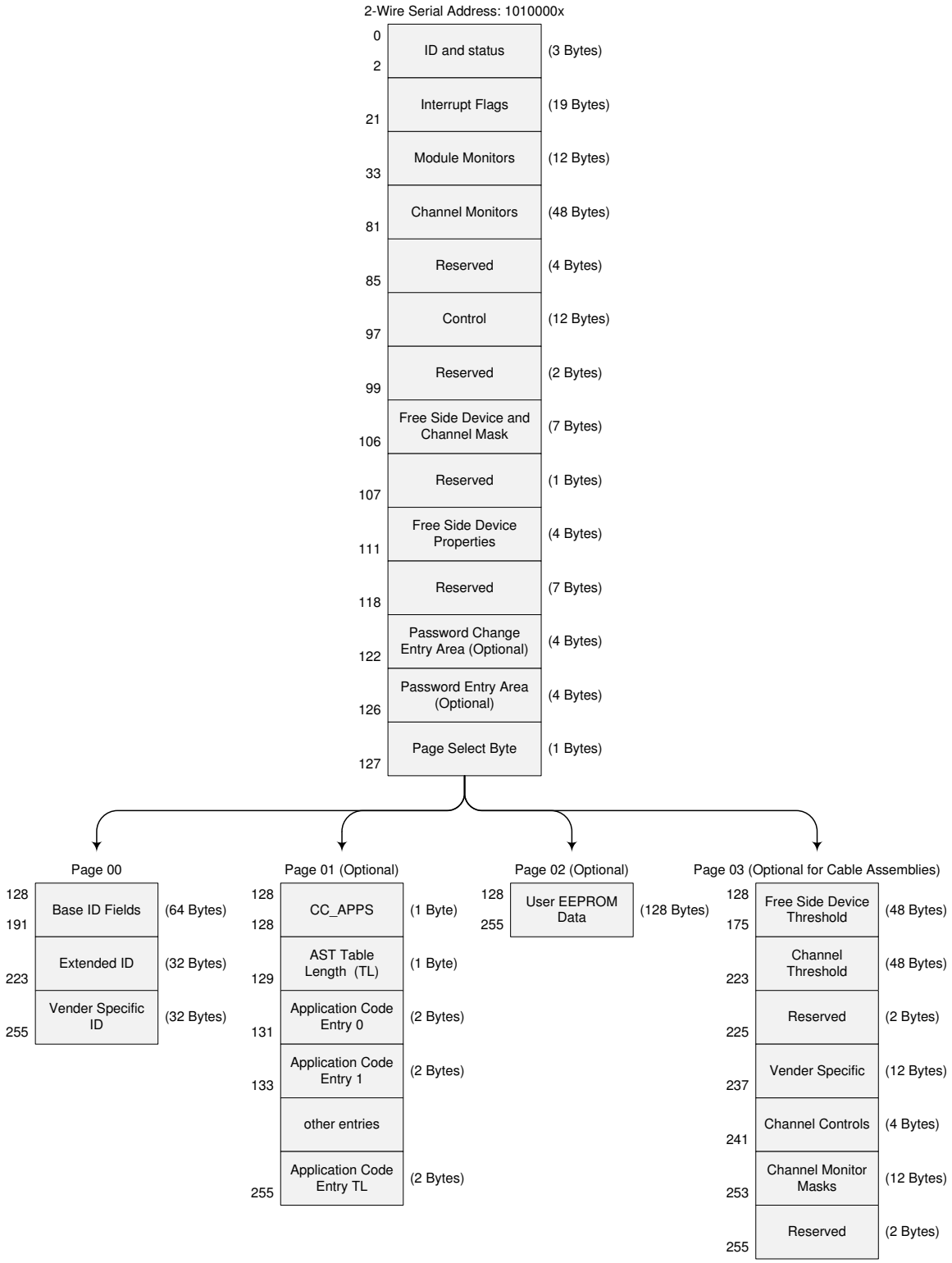

Figure 30 — QSFP+ Memory Map

In order to allow access to multiple QSFP+ Modules on the same 2-wire serial interface, the QSFP+ pinout includes a ModSelL pin which allows the host to select the respective Module for interaction. See Subclause 4.1.1.1 for details on ModSelL and Subclause 4.1.2 for details of the 2-Wire serial interface.

Note: Reserved memory locations are to be filled with logic zeros in all bit locations for reserved bytes, and in reserved bit locations for partially specified byte locations as described in this clause. Optional bits (O) that are not being used are to be filled with logic zeros. Not Applicable bits (NA) shall be filled with logic zeros. The indications of Optional (O), Required (R) and Not Applicable (NA) registers are shown in each table for the appropriate cable types.

7.6.1 Lower Memory Map

The lower 128 bytes of the 2-wire serial bus address space, see Table 17, is used to access a variety of measurements and diagnostic functions, a set of control functions, and a means to select which of the various upper memory map pages are accessed on subsequent reads. This portion of the address space is always directly addressable and thus is chosen for monitoring and control functions that may need to be repeatedly accessed. The definition of Identifier field is the same as page 00h Address Byte 128.

Table 17 — Lower Memory Map (A0h)

Address	Description	Type	Passive Copper, Active Copper, Active Optical	Optical Module
0	Identifier (1 Byte)	Read-Only	R	R
1-2	Status (2 Bytes)	Read-Only	See Table 18	
3-21	Interrupt Flags (19 Bytes)	Read-Only	See Tables 19-21	
22-33	Module Monitors (12 Bytes)	Read-Only	See Table 22	
34-81	Channel Monitors (48 Bytes)	Read-Only	See Table 23	
82-85	Reserved (4 Bytes)	Read-Only	Reserved	
86-97	Control (12 Bytes)	Read/Write	See Table 24	
98-99	Reserved (2 Bytes)	Read/Write	Reserved	
100-106	Module and Channel Masks (7 Bytes)	Read/Write	See Table 25	
107-118	Reserved (12 Bytes)	Read/Write	Reserved	
119-122	Password Change Entry Area (optional) (4 Bytes)	Read/Write	O	O
123-126	Password Entry Area (optional) 4 Bytes	Read/Write	O	O
127	Page Select Byte	Read/Write	R	R

7.6.1.1 Status Indicator Bits

The Status Indicators are defined in Table 18.

Table 18 — Status Indicators (Page A0)

Address	Bit	Name	Description	Passive copper, Active Copper, Active Optical	Optical Module
1	All	Reserved			
2	7	Reserved			
	6	Reserved			
	5	Reserved			
	4	Reserved			
	3	Reserved			
	2	Flat_mem	Upper memory flat or paged. Flat memory: 0= paging, 1= page 0 only	R	R
	1	IntL	Digital state of the IntL Interrupt output pin	O	R
	0	Data_Not_Ready	Indicates Module has not yet achieved power up and memory data is not ready. Bit remains high until data is ready to be read at which time the device sets the bit low.	R	R

The Data_Not_Ready bit is high during module power up and prior to a valid suite of monitor readings. Once all monitor readings are valid, the bit is set low until the device is powered down. If the memory contents are static this bit can be always low.

7.6.1.2 Interrupt Flags

A portion of the memory map (Bytes 3 through 21), form a flag field. Within this field, the status of LOS and Tx Fault as well as alarms and warnings for the various monitored items is reported. For normal operation and default state, the bits in this field have the value of 0b. For the defined conditions of LOS, Tx Fault, module and channel alarms and warnings, the appropriate bit or bits are set, value = 1b. Once asserted, the bits remained set (latched) until cleared by a read operation that includes the affected bit or reset by the ResetL pin.

Fault bits that are cleared while the underlying fault persists MAY be immediately set again by the module. This may or may not cause the IntL to de-assert and then re-assert quickly. Hosts should be tolerant of both behaviors. The Channel Status Interrupt Flags are defined in Table 19. These flags may be masked. (See 7.6.1.6)

Table 19 — Channel Status Interrupt Flags (Page A0)

Address	Bit	Name	Description	Passive copper, Active Copper, Active Optical	Optical Module
3	7	L-Tx4 LOS	Latched TX LOS indicator, channel 4	O	O
	6	L-Tx3 LOS	Latched TX LOS indicator, channel 3	O	O
	5	L-Tx2 LOS	Latched TX LOS indicator, channel 2	O	O
	4	L-Tx1 LOS	Latched TX LOS indicator, channel 1	O	O
	3	L-Rx4 LOS	Latched RX LOS indicator, channel 4	O	O
	2	L-Rx3 LOS	Latched RX LOS indicator, channel 3	O	O
	1	L-Rx2 LOS	Latched RX LOS indicator, channel 2	O	O
	0	L-Rx1 LOS	Latched RX LOS indicator, channel 1	O	O
4	7-4	Reserved			
	3	L-Tx4 Fault	Latched TX fault indicator, channel 4	O	R
	2	L-Tx3 Fault	Latched TX fault indicator, channel 3	O	R
	1	L-Tx2 Fault	Latched TX fault indicator, channel 2	O	R
	0	L-Tx1 Fault	Latched TX fault indicator, channel 1	O	R
5	All	Reserved			

The Module Monitor Interrupt Flags are defined in Table 20.

Table 20 — Module Monitor Interrupt Flags (Page A0)

Address	Bit	Name	Description	Passive copper, Active Copper, Active Optical	Optical Module
6	7	L-Temp High Alarm	Latched high temperature alarm	O	R
	6	L-Temp Low Alarm	Latched low temperature alarm	O	O
	5	L-Temp High Warning	Latched high temperature warning	O	O
	4	L-Temp Low Warning	Latched low temperature warning	O	O
	3-1	Reserved			
	0	Initialization complete flag	Asserted (one) after initialization and/or reset has completed. Returns to Zero when read.	0	0
7	7	L-Vcc High Alarm	Latched high supply voltage alarm	O	O
	6	L-Vcc Low Alarm	Latched low supply voltage alarm	O	O
	5	L-Vcc High Warning	Latched high supply voltage warning	O	O
	4	L-Vcc Low Warning	Latched low supply voltage warning	O	O
	3-0	Reserved			
8	All	Vendor Specific			

The Channel Monitor Interrupt Flags are defined in Table 21.

Table 21 — Channel Monitor Interrupt Flags (Page A0)

Address	Bit	Name	Description	Passive copper, Active Copper, Active Optical	Optical Module
9	7	L-Rx1 Power High Alarm	Latched high RX power alarm, channel 1	O	O
	6	L-Rx1 Power Low Alarm	Latched low RX power alarm, channel 1	O	O
	5	L-Rx1 Power High Warning	Latched high RX power warning, channel 1	O	O
	4	L-Rx1 Power Low Warning	Latched low RX power warning, channel 1	O	O
	3	L-Rx2 Power High Alarm	Latched high RX power alarm, channel 2	O	O
	2	L-Rx2 Power Low Alarm	Latched low RX power alarm, channel 2	O	O
	1	L-Rx2 Power High Warning	Latched high RX power warning, channel 2	O	O
	0	L-Rx2 Power Low	Latched low RX power	O	O

		Warning	warning, channel 2		
10	7	L-Rx3 Power High Alarm	Latched high RX power alarm, channel 3	O	O
	6	L-Rx3 Power Low Alarm	Latched low RX power alarm, channel 3	O	O
	5	L-Rx3 Power High Warning	Latched high RX power warning, channel 3	O	O
	4	L-Rx3 Power Low Warning	Latched low RX power warning, channel 3	O	O
	3	L-Rx4 Power High Alarm	Latched high RX power alarm, channel 4	O	O
	2	L-Rx4 Power low Alarm	Latched low RX power alarm, channel 4	O	O
	1	L-Rx4 Power high Warning	Latched high RX power warning, channel 4	O	O
	0	L-Rx4 Power low warning	Latched low RX power warning, channel 4	O	O
11	7	L-Tx1 Bias High Alarm	Latched high TX bias alarm, channel 1	O	O
	6	L-Tx1 Bias Low Alarm	Latched low TX bias alarm, channel 1	O	O
	5	L-Tx1 Bias high Warning	Latched high TX bias warning, channel 1	O	O
	4	L-Tx1 Bias Low Warning	Latched low TX bias warning, channel 1	O	O
	3	L-Tx2 Bias High Alarm	Latched high TX bias alarm, channel 2	O	O
	2	L-Tx2 Bias Low Alarm	Latched low TX bias alarm, channel 2	O	O
	1	L-Tx2 Bias High Warning	Latched High TX bias warning, channel 2	O	O
	0	L-Tx2 Bias Low Warning	Latched low TX bias warning, channel 2	O	O
12	7	L-Tx3 Bias High Alarm	Latched high TX bias alarm, channel 3	O	O
	6	L-Tx3 Bias Low Alarm	Latched low TX bias alarm, channel 3	O	O
	5	L-Tx3 Bias High Warning	Latched high TX bias warning, channel 3	O	O
	4	L-Tx3 Bias Low Warning	Latched low TX bias warning, channel 3	O	O
	3	L-Tx4 Bias High Alarm	Latched high TX bias alarm, channel 4	O	O
	2	L-Tx4 Bias Low Alarm	Latched low TX bias alarm, Channel 4	O	O
	1	L-Tx4 Bias High Warning	Latched high TX bias warning, channel 4	O	O
	0	L-Tx4 Bias Low Warning	Latched low TX bias warning, channel 4	O	O
13-14	All	Reserved	Reserved channel monitor flags, set 3		
15-16	All	Reserved	Reserved channel monitor flags, set 4		
17-18	All	Reserved	Reserved channel monitor flags, set 5		
19-21	All	Vendor Specific			

7.6.1.3 Module Monitors

Real time monitoring for the QSFP+ module include Module temperature, Module supply voltage, and monitoring for each transmit and receive channel. Channel monitoring functions are described in Subclause 7.6.1.4.

Measured parameters are reported in 16-bit data fields, i.e., two concatenated bytes. These are shown in Table 22. The 16 bit-data fields allow for wide dynamic range. This is not intended to imply that a 16-bit A/D system is recommended or required in order to achieve the accuracy goals stated below. The width of the data field should not be taken to imply a given level of precision. It is conceivable that the accuracy goals herein can be achieved by a system having less than 16 bits of resolution. It is recommended that any low-order data bits beyond the system's specified accuracy be fixed at zero. Overall system accuracy and precision will be vendor dependent.

To guarantee coherency of the diagnostic monitoring data, the host is required to retrieve any multi-byte fields from the diagnostic monitoring data structure by the use of a single two-byte read sequence across the 2-wire serial interface. The Module is required to insure that any multi-byte fields that are updated with diagnostic monitoring data must have this update done in a fashion that guarantees coherency and consistency of the data.

In other words, the update of a multi-byte field by the Module must not occur such that a partially updated multi-byte field can be transferred to the host. Also, the Module shall not update a multi-byte field within the structure during the transfer of that multi-byte field to the host, such that partially updated data would be transferred to the host.
Accuracy requirements specified below shall apply to the operating signal range specified in the relevant standard. The manufacturer's specification should be consulted for more detail on the conditions under which the accuracy requirements are met.

Measurements are calibrated over vendor specified operating temperature and voltage and should be interpreted as defined below. Alarm and warning threshold values should be interpreted in the same manner as real time 16-bit data.

Internally measured Module temperature are represented as a 16-bit signed twos complement value in increments of 1/256 degrees Celsius, yielding a total range of −128C to +128C that is considered valid between −40 and +125C. Temperature accuracy is vendor specific but must be better than ±3 degrees Celsius over specified operating temperature and voltage. Please see vendor specification for details on location of temperature sensor.

Internally measured Module supply voltage are represented as a 16-bit unsigned integer with the voltage defined as the full 16 bit value (0 – 65535) with LSB equal to 100 uVolt, yielding a total measurement range of 0 to +6.55 Volts. Practical considerations to be defined by Module manufacturer will tend to limit the actual bounds of the supply voltage measurement. Accuracy is vendor specific but must be better than ±3% of the manufacturer's nominal value over specified operating temperature and voltage.

Table 22 — Module Monitoring Values (Page A0)

Address	Bit	Name	Description	Passive copper, Active Copper, Active Optical	Optical Module
22	All	Temperature MSB	Internally measured module temperature	O	R
23	All	Temperature LSB		O	R
24-25	All	Reserved			
26	All	Supply Voltage MSB	Internally measured module supply voltage	O	O
27	All	Supply Voltage LSB		O	O
28-29	All	Reserved			
30-33	All	Vendor Specific			

7.6.1.4 Channel Monitoring

Real time channel monitoring is for each transmit and receive channel and includes optical input power and Tx bias current. Module monitoring functions are described in Subclause 7.6.1.3.

Measurements are calibrated over vendor specified operating temperature and voltage and should be interpreted as defined below. Alarm and warning threshold values should be interpreted in the same manner as real time 16-bit data. Table 23 defines the Channel Monitoring.

Measured TX bias current is in mA and are represented as a 16-bit unsigned integer with the current defined as the full 16 bit value (0 – 65535) with LSB equal to 2 uA, yielding a total measurement range of 0 to 131 mA. Accuracy is vendor specific but must be better than ±10% of the manufacturer’s nominal value over specified operating temperature and voltage.

Measured RX received optical power is in mW and can represent either average received power or OMA depending upon how bit 3 of byte 220 (upper memory page 00h) is set. Represented as a 16 bit unsigned integer with the power defined as the full 16 bit value (0 – 65535) with LSB equal to 0.1 uW, yielding a total measurement range of 0 to 6.5535 mW (~-40 to +8.2 dBm). Absolute accuracy is dependent upon the exact optical wavelength.

For the vendor specified wavelength, accuracy shall be better than ±3 dB over specified temperature and voltage. This accuracy shall be maintained for input power levels up to the lesser of maximum transmitted or maximum received optical power per the appropriate standard. It shall be maintained down to the minimum transmitted power minus cable plant loss (insertion loss or passive loss) per the appropriate standard. Absolute accuracy beyond this minimum required received input optical power range is vendor specific.

Table 23 — Channel Monitoring Values (Page A0)

Address	Bit	Name	Description	Passive copper, Active Copper, Active Optical	Optical Module
34	All	Rx1 Power MSB	Internally measured RX input power, channel 1	O	O
35	All	Rx1 Power LSB		O	O
36	All	Rx2 Power MSB	Internally measured RX input power, channel 2	O	O
37	All	Rx2 Power LSB		O	O
38	All	Rx3 Power MSB	Internally measured RX input power, channel 3	O	O
39	All	Rx3 Power LSB		O	O
40	All	Rx4 Power MSB	Internally measured RX input power, channel 4	O	O
41	All	Rx4 Power LSB		O	O
42	All	Tx1 Bias MSB	Internally measured TX bias, channel 1	O	O
43	All	Tx1 Bias LSB		O	O
44	All	Tx2 Bias MSB	Internally measured TX bias, channel 2	O	O
45	All	Tx2 Bias LSB		O	O
46	All	Tx3 Bias MSB	Internally measured TX bias, channel 3	O	O
47	All	Tx3 Bias LSB		O	O
48	All	Tx4 Bias MSB	Internally measured TX bias, channel 4	O	O
49	All	Tx4 Bias LSB		O	O
50-57		Reserved channel monitor set 3			
58-65		Reserved channel monitor set 4			
66-81		Vendor Specific			

7.6.1.5 Control Bytes

Control Bytes are defined in Table 24. These bytes are intended to be written by the host.

Table 24 — Control Bytes (Page A0)

Address	Bit	Name	Description	Passive Copper, Active Copper, Active Optical	Optical Module
86	7-4	Reserved			
	3	Tx4 Disable	Read/Write bit that allows software disable of transmitters[1]	O	R
	2	Tx3 Disable	Read/Write bit that allows software disable of transmitters[1]	O	R
	1	Tx2 Disable	Read/Write bit that allows software disable of transmitters[1]	O	R
	0	Tx1 Disable	Read/Write bit that allows software disable of transmitters[1]	O	R
87	7/6	Rx4_Rate_select	Software rate select. Rx Channel 4 MSB/LSB	O	O
	5/4	Rx3_Rate_select	Software rate select. Rx Channel 3 MSB/LSB	O	O
	3/2	Rx2_Rate_select	Software rate select. Rx Channel 2 MSB/LSB	O	O
	1/0	Rx1_Rate_select	Software rate select. Rx Channel 1 MSB/LSB	O	O
88	7/6	Tx4_Rate_select	Software rate select. Tx Channel 4 MSB/LSB	O	O
	5/4	Tx3_Rate_select	Software rate select. Tx Channel 3 MSB/LSB	O	O
	3/2	Tx2_Rate_select	Software rate select. Tx Channel 2 MSB/LSB	O	O
	1/0	Tx1_Rate_select	Software rate select. Tx Channel 1 MSB/LSB	O	O
89	All	Rx4_Application_Select	Software Application Select per SFF-8078, Rx Channel 4	O	O
90	All	Rx3_Application_Select	Software Application Select per SFF-8078, Rx Channel 3	O	O
91	All	Rx2_Application_Select	Software Application Select per SFF-8078, Rx Channel 2	O	O
92	All	Rx1_Application_Select	Software Application Select per SFF-8078, Rx Channel 1	O	O
93	2-7	Reserved			
93	1	Power set	Power set to Low Power Mode Default 0	R	R
93	0	Power override	Override LP mode signal; power mode set via software; Default 0	R	R

94	All	Tx4_Application_Select	Software application per SFF-8079, Tx Channel 4	O	O
95	All	Tx3_Application_Select	Software application per SFF-8079, Tx Channel 3	O	O
96	All	Tx2_Application_Select	Software application per SFF-8079, Tx Channel 2	O	O
97	All	Tx1_Application_Select	Software application per SFF-8079, Tx Channel 1	O	O
98-99	All	Reserved			
1. Writing '1' disables the laser of the channel					

If software Rate Select is not implemented, the Module ignores the value of Rate Select bits. The registers read all "0"s upon power-up.

7.6.1.6 Module and Channel Masks

The host system may control which flags result in an interrupt (IntL) by setting high individual bits from a set of masking bits in bytes 100-104 for module flags, and bytes 242-253 of page 03h for channel flags. These are described in Table 25 and Table 48. A 1 value in a masking bit prevents the assertion of the hardware IntL pin by the corresponding latched flag bit. Masking bits are volatile and startup with all unmasked (masking bits 0).

The mask bits may be used to prevent continued interruption from on-going conditions, which would otherwise continually reassert the hardware IntL pin. A mask bit is required (indicated by C for Conditional) whenever the associated flag bit is implemented.

Table 25 — IntL Masking Bits for Module and Channel Status Interrupts (Page A0)

Address	Bit	Name	Description	Linear/Passive Active Copper, Active Optical	Optical Module
100	7	M-Tx4 LOS	Masking bit for TX LOS indicator, channel 4	C	C
	6	M-Tx3 LOS	Masking bit for TX LOS indicator, channel 3	C	C
	5	M-Tx2 LOS	Masking bit for TX LOS indicator, channel 2	C	C
	4	M-Tx1 LOS	Masking bit for TX LOS indicator, channel 1	C	C
	3	M-Rx4 LOS	Masking bit for RX LOS indicator, channel 4	C	C
	2	M-Rx3 LOS	Masking bit for RX LOS indicator, channel 3	C	C
	1	M-Rx2 LOS	Masking bit for RX LOS indicator, channel 2	C	C
	0	M-Rx1 LOS	Masking bit for RX LOS indicator, channel 1	C	C
101	7-4	Reserved			
	3	M-Tx4 Fault	Masking bit for TX fault indicator, channel 4	C	R
	2	M-Tx3 Fault	Masking bit for TX fault indicator, channel 3	C	R
	1	M-Tx2 Fault	Masking bit for TX fault indicator, channel 2	C	R
	0	M-Tx1 Fault	Masking bit for TX fault indicator, channel 1	C	R

102	All	Reserved			
103	7	M-Temp High Alarm	Masking bit for high Temperature alarm	C	C
	6	M-Temp Low Alarm	Masking bit for low Temperature alarm	C	C
	5	M- Temp High Warning	Masking bit for high Temperature warning	C	C
	4	M-Temp Low Warning	Masking bit for low Temperature warning	C	C
	3-1	Reserved			
	0	M-Initialization complete flag	Masking bit for initialization complete flag.	C	C
104	7	M-Vcc High alarm	Masking bit for high Vcc alarm	C	C
	6	M-Vcc Low alarm	Masking bit for low Vcc alarm	C	C
	5	M-Vcc High Warning	Masking bit for high Vcc warning	C	C
	4	M-Vcc Low Warning	Masking bit for low Vcc warning	C	C
	3-0	Reserved			
105-106	All	Vendor Specific			

7.6.1.7 Rate Select (Byte 87-88)

Rate Select is an optional control used to limit the receiver bandwidth for compatibility with multiple data rates (most likely Fibre Channel). In addition, rate selection allows the transmitter to be fine-tuned for specific data rate transmissions.

The Module may:

a) Provide no support for rate selection
b) Rate selection using extended rate select
c) Rate selection with application select tables

7.6.1.7.1 No Rate Selection Support

When no rate selection is supported, (page 00h, byte 221, bits 2 and 3) have a value of 0 and Options (page 00h, byte 195, bit 5) have a value of 0. Lack of implementation does not indicate lack of simultaneous compliance with multiple standard rates. Compliance with particular standards should be determined from Module Values (See Table 33).

7.6.1.7.2 Extended Rate Selection

When (page 00h, byte 221, bits 2 and 3) have the values of 0 and 1 respectively and at least one of the bits in the Extended Rate Compliance byte (page 00h, byte 141) have a value of one, the module supports extended rate select. Extended rate selection has reserved two bits per channel in the Rxn_Rate_Select (byte 87) and two bits per channel in the Txn_Rate_Select (byte 88) to denote up to four rates. Table 26 defines the

functionality when bit 0 of byte 141 is 1. All other values of Extended Rate Compliance byte are reserved.

Table 26 — Functionality of byte 87 and 88: xN_Rate_Select with Extended Rate selection Page (A0)

xN_Rate_Select msb Value	xN-Rate_Select Isb Value	Description	Linear/Passive Active Copper, Active Optical	Optical Module
0	0	Optimized for data rates less than 2.2Gb/s	O	O
0	1	Optimized for data rates from 2.2 up to 6.6 Gb/s	O	O
1	0	Optimized for 6.6 Gb/s data rates and above	O	O
1	1	Reserved		

7.6.1.7.3 Rate Selection Using Application Select Tables

Application Select(byte 89) maximizes compatibility with SFF-8079 Part 2 for Modules that are SFF-8472 compliant.

When the Rate Select declaration bits (page 00h, byte 221, bits 2 and 3) have the values of 1 and 0 respectively, the Application Select method defined in Page 01h is used (see Subclause 7.6.3).

The host reads the entire application select table on page 01h to determine the capabilities of the Module. The host controls each channel separately by writing a Control Mode and Table Select (TS) byte to bytes 89-92 and bytes 94-97. The bits of the Rx_Application Select and the Tx_Application Select registers are defined in Table 27.

Table 27--Definition of Application Select (Bytes 89 to 92 and Bytes 94 to 97) (Page A0)

7	6	5	4	3	2	1	0
Control Mode		Table Select TS					

Control Mode defines the application control mode. Table Select selects module behavior from the AST among 63 possibilities (000000 to 111110). Note that (111111) is invalid.

Table 28 — Detailed Description of Control Mode (Page A0)

Bit 7	Bit 6	Function	Address 87, 88 Control	Table Select Control
0	0	Extended rate selection	LSB and MSB are used according to declaration bits.	Ignored
1	Don’t care	Application select	Ignored	field points to application

Note: Default values for control mode is 0,0 and is volatile memory.

7.6.1.8 Password Entry and change

Bytes 119-126 are reserved for an optional password entry function. The Password entry bytes are write only and will be retained until power down, reset, or rewritten by host. This function may be used to control read/write access to vendor specific page 02h. Additionally, module vendors may use this function to implement write protection of Serial ID and other QSFP+ read only information. Passwords may be supplied to and used by Host manufacturers to limit write access in the User EEPROM Page 02h.

Password access shall not be required to access QSFP+ defined data in the lower memory page 00h or in upper pages 00h, 02h and 03h. Note that multiple module manufacturer passwords may be defined to allow selective access to read or write to various sections of memory as allowed above.

Host manufacturer and module manufacturer passwords shall be distinguished by the high order bit (bit 7, byte 123). All host manufacturer passwords shall fall in the range of 00000000h to 7FFFFFFFh, and all module manufacturer passwords in the range of 80000000h to FFFFFFFFh. Host manufacturer passwords shall be initially set to 00001011h in new modules.

Host manufacturer passwords may be changed by writing a new password in bytes 119-122 when the correct current Host manufacture password has been entered in 123-126, with the high order bit being ignored and forced to a value of 0 in the new password.
The password entry field shall be set to 00000000h on power up and reset.

7.6.2 Upper Memory Map Page 00h

Page 00h consists of the Serial ID and is used for read only identification information. The Serial ID is divided into the Base_ID Fields, Extended ID Fields and Vendor Specific ID Fields. The format of the Serial ID Memory Map is shown in Table 29.

Table 29 — Serial ID: Data Fields (Page 00)

Address	Size (Bytes)	Name	Description of Base ID Field	Passive Copper, Active Copper, Active Optical	Optical Module
Base ID fields					
128	1	Identifier	Identifier Type of serial Module	**R**	R
129	1	Ext. Identifier	Extended Identifier of Serial Module	R	R
130	1	Connector	Code for connector type	R	R
131-138	8	Specification compliance	Code for electronic compatibility or optical compatibility	R	R
139	1	Encoding	Code for serial encoding algorithm	R	R
140	1	BR, nominal	Nominal bit rate, units of 100 MBits/s	R	R
141	1	Extended rateselect Compliance	Tags for extended rate select compliance	R	R
142	1	Length(SMF)	Link length supported for SMF fiber in km (note 1)	R	R

143	1	Length(OM3 50 um)	Link length supported for EBW 50/125 um fiber (OM3), units of 2m (note 1)	R	R
144	1	Length(OM2 50 um)	Link length supported for 50/125 um fiber (OM2), units of 1m (note 1)	R	R
145	1	Length(OM1 62.5 um)	Link length supported for 62.5/125 um fiber (OM1), units of 1m (note 1)	R	R
146	1	Length (Copper)	Link length of copper or active cable, units of 1 m (note 1)Link length supported for 50/125 um fiber (OM4), units of 2 m) when Byte 147 declares 850 nm VCSEL as defined in Table 37	R	R
147	1	Device tech	Device technology	R	R
148-163	16	Vendor name	QSFP+ vendor name(ASCII)	R	R
164	1	Extended Module	Extended Module codes for InfiniBand	R	R
165-167	3	Vendor OUI	QSFP+ vendor IEEE company ID	R	R
168-183	16	Vendor PN	Part number provided by QSFP+ vendor(ASCII)	R	R
184-185	2	Vendor rev	Revision level for part number provided by vendor(ASCII)	R	R
186-187	2	Wave length or Copper cable Attenuation	Nominal laser wavelength (wavelength=value/20 in nm) or copper cable attenuation in dB at 2.5GHz (Adrs 186) and 5.0GHz (Adrs 187)	R	R
188-189	2	Wavelength tolerance	Guaranteed range of laser wavelength(+/- value) from nominal wavelength.(wavelength Tol.=value/200 in nm)	R	R
190	1	Max case temp.	Maximum case temperature in degrees C	R	R
191	1	CC_BASE	Check code for base ID fields (addresses 128-190)	R	R
Extended ID fields					
192-195	4	Options	Rate Select, TX Disable, TX Fault, LOS, Warning indicators for: Temperature, VCC, RX power, TX Bias	R	R
196-211	16	Vendor SN	Serial number provided by vendor (ASCII)	R	R
212-219	8	Date Code	Vendor’s manufacturing date code	R	R
220	1	Diagnostic Monitoring Type	Indicates which types of diagnostic monitoring are implemented (if any) in the Module. Bit 1,0	R	R

			Reserved		
221	1	Enhanced Options	Indicates which optional enhanced features are implemented in the Module.	R	R
222	1	Reserved			
223	1	CC_EXT	Check code for the Extended ID Fields (addresses 192-222)	R	R
Vendor Specific ID Fields					
224-255	32	Vendor Specific EEPROM			

Note 1: A value of zero means that the Module does not support the specified technology or that the length information must be determined from the Module technology.

7.6.2.1 Identifier (Address 128)

The identifier value specifies the physical device described by the serial information. This value shall be included in the serial data. The defined identifier values are shown in Table 30. The QSFP+ Module shall use the identifier 0Dh.

Table 30 — Identifier Values (Address 128) (Page 00)

Value	*Description of Physical device*
00h	*Unknown or unspecified*
01h	*GBIC*
02h	*Module/connector soldered to motherboard*
03h	*SFP*
04h	*300 pin XBI*
05h	*XENPAK*
06h	*XFP*
07h	*XFF*
08h	*XFP-E*
09h	*XPAK*
0Ah	*X2*
0Bh	*DWDM-SFP*
0Ch	*QSFP*
0Dh	*QSFP+*
0Eh-7Fh	*Reserved*
80-FFh	*Vendor Specific*
These values were valid at the time of technical balloting. The reference specification for values subsequent to that date is SFF-8024 Cross Reference to Industry Product Names	

7.6.2.2 Extended Identifier (Address 129)

The extended identifier provides additional information about the basic Module types such as whether the Module contains a CDR function and identifies the power consumption class it belongs to.

Table 31 — Extended Identifier Values (Address 129) (Page 00)

Bit	Description of Device Type
7-6	00: Power Class 1 Module (1.5W max. Power consumption)
	01: Power Class 2 Module (2.0W max. Power consumption)
	10: Power Class 3 Module (2.5W max. Power consumption)
	11: Power Class 4 Module (3.5W max. Power consumption)
5	Reserved
4	0: No CLEI code present in Page 02h
	1: CLEI code present in Page 02h
3	0: No CDR in TX , 1: CDR present in TX
2	0: No CDR in RX , 1: CDR present in RX
1-0	Reserved

7.6.2.3 Connector (Address 130)

The Connector value indicates the external connector provided on the interface. This value shall be included in the serial data. The defined connector values are shown in Table 32. Note that 01h – 0Bh are not QSFP+ compatible, and are included for compatibility with other standards.

Table 32 — Connector Values (Address 130) (Page 00)

Value	Description of Connector
00h	Unknown or unspecified
01h	SC
02h	FC Style 1 copper connector
03h	FC Style 2 copper connector
04h	BNC/TNC
05h	FC coax headers
06h	Fiberjack
07h	LC
08h	MT-RJ
09h	MU
0Ah	SG
0Bh	Optical Pigtail
0Ch	MPO
0D-1Fh	Reserved
20h	HSSDC II
21h	Copper pigtail
22h	RJ45
23h	No separable connector
24h-7Fh	Reserved
80-FFh	Vendor specific

7.6.2.4 Specification compliance (Address 131-138)

The following bit significant indicators define the electronic or optical interfaces that are supported by the QSFP+ Module. For Fibre Channel QSFP+s, the Fibre Channel speed, transmission media, transmitter technology, and distance capability shall all be indicated.

Table 33 — Specification compliance (Address 131-138) (Page 00)

Address	Bit	Description of Module data
10/40G Ethernet Compliance Code		
131	7	Reserved
131	6	10GBASE-LRM
131	5	10GBASE-LR
131	4	10GBASE-SR
131	3	40GBASE-CR4
131	2	40GBASE-SR4
131	1	40GBASE-LR4
131	0	40G Active Cable (XLPPI)
SONET Compliance codes		
132	7-4	Reserved
132	3	40G OTN (OTU3B/OTU3C)
132	2	OC 48, long reach
132	1	OC 48, intermediate reach
132	0	OC 48 short reach
SAS/SATA compliance codes		
133	7,6	Reserved SAS
133	5	SAS 6.0G
133	4	SAS 3.0G
133	3-0	Reserved
Gigabit Ethernet Compliant codes		
134	7-4	Reserved
134	3	1000BASE-T
134	2	1000BASE-CX
134	1	1000BASE-LX
134	0	1000BASE-SX
Fibre Channel link length/Transmitter Technology		
135	7	Very long distance (V)
135	6	Short distance (S)
135	5	Intermediate distance (I)
135	4	Long distance (L)
135	3	Medium (M)
135	2	Reserved
135	1	Longwave laser (LC)
135	0	Electrical inter-enclosure (EL)
136	7	Electrical intra-enclosure
136	6	Shortwave laser w/o OFC (SN)
136	5	Shortwave laser w OFC (SL)
136	4	Longwave Laser (LL)
136	0-3	Reserved
Fibre Channel transmission media		
137	7	Twin Axial Pair (TW)
137	6	Shielded Twisted Pair (TP)
137	5	Miniature Coax (MI)
137	4	Video Coax (TV)
137	3	Multi-mode 62.5m (M6)
137	2	Multi-mode 50m (M5)
137	1	Multi-mode 50um (OM3)
137	0	Single Mode (SM)

Fibre Channel Speed		
138	7	1200 Mbytes/Sec
138	6	800 Mbytes/Sec
138	5	1600 Mbytes/Sec
138	4	400 Mbytes/Sec
138	3,1	Reserved
138	2	200 Mbytes/Sec
138	0	100 Mbytes/Sec

7.6.2.5 Encoding (Address 139)

The encoding value indicates the serial encoding mechanism that is the nominal design target of the particular QSFP+ Module. The value shall be contained in the serial data. The defined encoding values are shown in Table 34.

Table 34 — Encoding Values (Address 139) (Page 00)

Code	*Description of encoding mechanism*
00h	*Unspecified*
01h	*8B10B*
02h	*4B5B*
03h	*NRZ*
04h	*SONET Scrambled*
05h	*64B66B*
06h	*Manchester*
07h-FFh	*Reserved*
These values were valid at the time of technical balloting. The reference specification for values subsequent to that date is SFF-8024 Cross Reference to Industry Product Names	

7.6.2.6 BR, nominal (Address 140)

The nominal bit rate (BR, nominal) is specified in units of 100 Megabits per second, rounded off to the nearest 100 Megabits per second. The bit rate includes those bits necessary to encode and delimit the signal as well as those bits carrying data information. A value of 0 indicates that the bit rate is not specified and must be determined from the Module technology. The actual information transfer rate will depend on the encoding of the data, as defined by the encoding value.

7.6.2.7 Extended RateSelect Compliance (Address 141)

The Extended RateSelect Compliance field is used to allow a single QSFP+ Module the flexibility to comply with single or multiple Extended RateSelect definitions. A definition is indicated by presence of a "1" in the specified bit tag position. If exclusive, non-overlapping bit tag definitions are used, Page 00h, byte 141 will allow compliance to 8 (1-8) distinct multi-rate definitions.

Table 35 — Extended RateSelect Compliance Tag Assignment (Address 141) (Page 00)

Address	Bits	Description
141	7-1	Reserved
141	0	QSFP+ Rate Select Version 1. This functionality is different from SFF-8472 and SFF-8431.

Note: Further details of the use of this field can be found in Subclause 7.6.1.7.

7.6.2.8 Length (Standard SM Fiber)-km (Address 142)

Addition to EEPROM data from original GBIC definition. This value specifies the link length that is supported by the QSFP+ Module while operating in compliance with the applicable standards using single mode fiber. Supported link length is as specified in the SFF 8074i standard. The value is in units of kilometers. A value of zero means that the Module does not support single mode fiber or that the length information must be determined from the Module technology. For all direct attach cable assemblies, including active optical cables the value shall be zero.

7.6.2.9 Length (OM3) (Address 143)

This value specifies the link length that is supported by the QSFP+ Module while operating in compliance with the applicable standards using 2000 MHZ*km (850 nm) extended bandwidth 50 micron core multimode fiber. The value is in units of 2 meters. A value of zero means that the Module does not support OM3 fiber or that the length information must be determined from the Module technology. For all direct attach cable assemblies, including active optical cables the value shall be zero.

7.6.2.10 Length (OM2) (Address 144)

This value specifies the link length that is supported by the QSFP+ Module while operating in compliance with the applicable standards using 500 MHz*Km (850 nm and 1310 nm) 50 micron multi-mode fiber. The value is in units of 1 meter. A value of zero means that the Module does not support OM2 fiber or that the length information must be determined from the Module technology. For all direct attach cable assemblies, including active optical cables the value shall be zero.

7.6.2.11 Length (OM1) (Address 145)

This value specifies the link length that is supported by the QSFP+ Module while operating in compliance with the applicable standards using 200 MHz*Km (850 nm) and 500 MHz*Km (1310 nm) 62.5 micron multi-mode fiber. The value is in units of 1 meter. A value of zero means that the Module does not support OM1 fiber or that the length information must be determined from the Module technology. For all direct attach cable assemblies, including active optical cables the value shall be zero.

7.6.2.12 Cable Assembly Length (Copper or active cable) (Address 146)

This value specifies the link length of the Cable assembly passive The value is in units of 1 meter. Link length is as specified in the INF 8074. Link lengths less than 1 meter shall indicate 1 meter. A value of zero means that the Module is not a cable assembly or that the length information must be determined from the Module technology. A value of 255 means that the Module supports a link length greater than 254 m.

7.6.2.13 Device Tech (Address 147)

The technology used in the device is described in Table 36 and Table 37. The top 4 bits of the Device Tech byte describe the device technology used. The lower four bits (bits 7-4) of the Device Tech byte are used to describe the transmitter technology.

Table 36 — Description of Device Technology (Address 147) (Page 00)

Bits	Description of Physical device
7-4	Transmitter technology
3	0: No wavelength control 1: Active wavelength control
2	0: Uncooled transmitter device 1: Cooled transmitter
1	0: Pin detector 1: APD detector
0	0: Transmitter not tunable 1: Transmitter tunable

Table 37 — Transmitter Technology (Address 147 bits 7-4) (Page 00)

Value	Description of physical device
0000b	850 nm VCSEL
0001b	1310 nm VCSEL
0010b	1550 nm VCSEL
0011b	1310 nm FP
0100b	1310 nm DFB
0101b	1550 nm DFB
0110b	1310 nm EML
0111b	1550 nm EML
1000b	Others
1001b	1490 nm DFB
1010b	Copper cable unequalized
1011b	Copper cable passive equalized
1100b	Copper cable, near and far end limiting active equalizers
1101b	Copper cable, far end limiting active equalizers
1110b	Copper cable, near end limiting active equalizers
1111b	Copper cable, linear active equalizers

7.6.2.14 Vendor Name (Address 148-163)

The vendor name is a 16 character field that contains ASCII characters, left-aligned and padded on the right with ASCII spaces (20h). The vendor name shall be the full name of the corporation, a commonly accepted abbreviation of the name of the corporation, the SCSI company code for the corporation, or the stock exchange code for the corporation. At least one of the vendor name or the vendor OUI fields shall contain valid serial data.

7.6.2.15 Extended Module Codes (Address 164)

The Extended Module Codes define the electronic or optical interfaces for InfiniBand that are supported by the QSFP+ Module as shown in Table 38.

Table 38 — Extended Module Code Values (Address 164) (Page 00)

Address	Bit	Description of Module Data
InfiniBand Compliance codes		
164	7-5	Reserved
164	4	Reserved for EDR
164	3	Reserved for FDR
164	2	QDR
164	1	DDR
164	0	SDR

7.6.2.16 Vendor OUI (Address 165-167)

The vendor organizationally unique identifier field (vendor OUI) is a 3-byte field that contains the IEEE Company Identifier for the vendor. A value of all zero in the 3-byte field indicates that the Vendor OUI is unspecified.

7.6.2.17 Vendor PN (Address 168-183)

The vendor part number (vendor PN) is a 16-byte field that contains ASCII characters, left aligned and padded on the right with ASCII spaces (20h), defining the vendor part number or product name. A value of all zero in the 16-byte field indicates that the vendor PN is unspecified.

7.6.2.18 Vendor Rev (Address 184-185)

The vendor revision number (vendor rev) is a 2-byte field that contains ASCII characters, left aligned and padded on the right with ASCII spaces (20h), defining the vendor's product revision number. A value of all zero in the field indicates that the vendor Rev is unspecified.

7.6.2.19 Wavelength (Address 186-187)

Nominal transmitter output wavelength at room temperature. 16 bit hex value with byte 186 as high order byte and byte 187 as low order byte. The laser wavelength is equal to the 16 bit integer value divided by 20 in nm (units of 0.05nm). This resolution should be adequate to cover all relevant wavelengths yet provide enough resolution for all expected DWDM applications. For accurate representation of controlled wavelength applications, this value should represent the center of the guaranteed wavelength range.

If the cable is identified as copper these registers will be used to define the cable attenuation. An indication of 0 dB attenuation refers to the case where the attenuation is not known or is unavailable.

Address 186 (00-FFh) is an 8 bit hex value indicating the copper cable attenuation at 2.5GHz in units of 1 dB

Address 187 (00-FFh) is an 8 bit hex value indicating the copper cable attenuation at 5.0GHz in units of 1 db.

7.6.2.20 Wavelength Tolerance (Address 188-189)

The guaranteed +/- range of transmitter output wavelength under all normal operating conditions. For direct attach cable assemblies the value is zero. 16 bit value with byte 188 as high order byte and byte 189 as low order byte. The laser wavelength is equal to the 16 bit integer value divided by 200 in nm (units of 0.005nm). Thus, the following two examples:

Example 1:

10GBASE-LR Wavelength Range = 1260 to 1355 nm
Nominal Wavelength in bytes 186 - 187 = 1307.5 nm.
Represented as INT(1307.5 nm * 20) = 26150 = 6626h
Wavelength Tolerance in bytes 188 - 189 = 47.5nm.
Represented as INT(47.5 nm * 200) = 9500 = 251Ch

Example 2:

ITU-T Grid Wavelength = 1534.25 nm (195.4 THz) with 0.236 nm (30 GHz) Tolerance
Nominal Wavelength in bytes 186 - 187 = 1534.25 nm.

Represented as INT(1534.25nm * 20) = 30685 = 77DDh
Wavelength Tolerance in bytes 188 - 189 = 0.236 nm.
Represented as INT(0.236 nm * 200) = 47 = 002Fh

7.6.2.21 Max Case Temp (Address 190)

Allows specification of a maximum case temperature other than the standard 70C. Maximum case temperature is an 8-bit value in Degrees C. A value of 00h implies the standard 70C rating.

7.6.2.22 CC_BASE (Address 191)

The check code is a one byte code that can be used to verify that the first 63 bytes of serial information in the QSFP+ Module is valid. The check code shall be the low order 8 bits of the sum of the contents of all the bytes from byte 128 to byte 190, inclusive.

7.6.2.23 Options (Address 192-195)

The bits in the option field shall specify the options implemented in the QSFP+ Module as described in Table 39.

Table 39 — Option Values (Address 192-195) (Page 00)

Address	Bit	Description of option	Linear/Passive Active Copper Active Optical	Optical Module
192	7-0	Reserved		
193	7-1	Reserved		
193	0	RX output amplitude programming, coded 1 if implemented, else 0.	R	R
194	7-4	Reserved		
194	3	Rx Squelch Disable implemented, coded 1 if implemented, else 0.	R	R
194	2	Rx Output Disable capable: coded 1 if implemented, else 0.	R	R
194	1	Tx Squelch Disable implemented: coded 1 if implemented, else 0.	R	R
194	0	Tx Squelch implemented: coded 1 if implemented, else 0.	R	R
195	7	Memory page 02 provided: coded 1 if implemented, else 0.	R	R
195	6	Memory page 01 provided: coded 1 if implemented, else 0.	R	R

195	5	RATE_SELECT is implemented. If the bit is set to 1 then active control of the select bits in the upper memory table is required to change rates. If the bit is set to 0, no control of the rate select bits in the upper memory table is required. In all cases, compliance with multiple rate standards should be determined by Module Codes in Bytes 132, 133, 134 and 135 of Page 00h.	R	R
195	4	Tx_DISABLE is implemented and disables the serial output.	R	R
195	3	Tx_FAULT signal implemented, coded 1 if implemented, else 0	R	R
195	2	Tx Squelch implemented to reduce OMA coded 0, implemented to reduce Pave coded 1.	R	R
195	1	Tx Loss of Signal implemented, coded 1 if implemented, else 0	R	R
195	0	Reserved		

7.6.2.24 Vendor SN (Address 196-211)

The vendor serial number (vendor SN) is a 16-character field that contains ASCII characters, left aligned and padded on the right with ASCII spaces (20h), defining the vendor's serial number for the QSFP+ Module. A value of all zero in the 16-byte field indicates that the vendor SN is unspecified.

7.6.2.25 Date Code (Address 212-219)

The date code is an 8-byte field that contains the vendor's date code in ASCII characters. The date code is mandatory. The date code shall be in the format specified by Table 40.

Table 40 — Date Codes (Address 212-219) (Page 00)

Address	Description of field	Linear/Passive Active Copper, Active Optical	Optical Module
212-213	ASCII code, two low order digits of year. (00=2000)	R	R
214-215	ASCII code digits of month(01=Jan through 12=Dec	R	R
216-217	ASCII code day of month (01-31)	R	R
218-219	ASCII code, vendor specific lot code, may be blank		

7.6.2.26 Diagnostic Monitoring Type (Address 220)

"Diagnostic Monitoring Type" is a 1-byte field with 8 single bit indicators describing how diagnostic monitoring is implemented in the particular QSFP+ Module. Bit indicators are shown in Table 41.

Digital Diagnostic Monitors monitor received power, bias current, supply voltage and temperature. Additionally, alarm and warning thresholds must be written as specified in this document. Auxiliary monitoring fields are optional extensions to Digital Diagnostics.

All digital monitoring values must be internally calibrated and reported in the units defined in this document.

Bit 3 indicates whether the received power measurement represents average input optical power or OMA. If the bit is set, average power is monitored. If not, OMA is monitored.

Table 41 — Diagnostic Monitoring Type (Address 220) (Page 00)

Address	Bits	Description
220	7-4	Reserved
.	.	.
220	3	Received power measurements type. 0=OMA 1=Average Power
220	2	Reserved
220	1-0	Reserved

7.6.2.27 Enhanced Options (Address 221)

The format of the Enhanced Options byte are shown in Table 42. The use of the Enhanced Options field is defined in Subclause 7.6.1.7. The state where the Rate Select declaration bits both have a value of 1 is reserved and should not be used.

Table 42 — Enhanced Options (byte 221)) (Page 00)

Address	Bit	Description	Linear/ Passive Active Copper Active Optical	Optical Module
221	7-4	Reserved		
221	3	Rate Selection Declaration: When this Declaration bit is 0 the module does not support rate selection. When this Declaration bit is 1, rate selection is implemented using extended rate selection. See 7.6.1.7.2	R	R
221	2	Application select table declaration. When this declaration bit is 1, the module supports rate selection using application select table mechanism. When this declaration bit is 0, the module does not support application select and page 01 does not exist	R	R
221	1-0	Reserved		

7.6.2.28 CC_EXT (Address 223)

The check code is a one-byte code that can be used to verify that the first 31 bytes of extended serial information in the QSFP+ Module is valid. The check code shall be the low order 8 bits of the sum of the contents of all the bytes from byte 192 to byte 222, inclusive.

7.6.2.29 Vendor Specific (Address 224-255)

This area may contain vendor specific information, which can be read from the QSFP+ Module. The data is read only. Bytes 224-255 of Page 00h may be used for Vendor Specific ID functions.

7.6.3 Upper Memory Map Page 01h

The format of Page 01h is defined in Table 43.

Table 43 — Application Select Table (Page 01)

Address	Bit Range	Name of Field	Description
128	7-0	CC_APPS	Check code for the AST: the check code shall be the low order bits of the sum of the contents of all the bytes from byte 129 to byte 255, inclusive.
129	7-6	Reserved	
129	5-0	AST Table Length, TL	A 6 bit binary number. TL, specifies how many application table entries are defined in bytes 130-255 addresses. TL is valid between 0 (1 entry) and 62 (for a total of 63 entries)
130,131	7-0,7-0	Application Code 0	Definition of first application supported (See Table 44)
…		Other Table Entries	
130+2*TL 131+2*TL	7-0, 7-0	Application code TL	Definition of last application supported (See Table 44)

Table 44 — Application Code Structure

Low Order Byte								High order Byte							
7	6	5	4	3	2	1	0	7	6	5	4	3	2	1	0
Reserved		Category						Variant							

7.6.4 User Writable and Vendor Specific Memory

Page 02 is optionally provided as user writable EEPROM. The host system may read or write this memory for any purpose. If bit 4 of Page 00 byte 129 is set, however, the first 10 bytes of Table 02h, bytes128-137 will be used to store the CLEI code for the module.

7.6.5 Upper Memory Page 03h

The upper memory map page 03h contains module thresholds, channel thresholds and masks, and optional channel controls. These are shown in Table 45 and described in detail in Subclause 7.6.1, Subclause 7.6.1.6 and Subclause 7.6.1.4.

Table 45 — Upper Memory Map Page 03h

Address	Description	Type
128-175	Module Thresholds (48 Bytes)	Read-Only
176-223	Channel Thresholds (48 Bytes)	Read-Only
224-225	Reserved (2 Bytes)	Read-Only
226-239	Vendor Specific Channel Controls (14 Bytes)	Read/Write
240-241	Optional Channel Controls (2 bytes)	Read/Write
242-253	Channel Monitor Masks (12 Bytes)	Read/Write
254-255	Reserved (2 bytes)	Read/Write

7.6.5.1 Module and Channel Thresholds

These values are stored in read-only memory in bytes 128-223 of the upper memory page 03h as shown in Table 46. Each monitor value has a corresponding high alarm, low alarm, high warning and low warning threshold. For each monitor that is implemented, High and Low Alarms Thresholds are required and are indicated by a C (Conditional) where the monitor

is optional or indicated by an R where the monitor is required. Warning thresholds, High and Low are optional. These factory-preset values allow the user to determine when a particular value is outside of "normal" limits as determined by the Module manufacturer. It is assumed that these values will vary with different technologies and different implementations.

The values reported in the Alarm and Warning Thresholds area may be typical values at some chosen nominal operating conditions and may be temperature compensated or otherwise adjusted when setting warning and/or alarm flags. Any threshold compensation or adjustment is vendor specific and optional. Refer to the vendor's data sheet for use of alarm and warning thresholds.

Table 46 — Module and Channel Thresholds (Page 03)

Address	# Bytes	Name	Description	Passive Copper, Active Copper, Active Optical	Optical Module
128-129	2	Temp High Alarm	MSB at low address	C	R
130-131	2	Temp Low Alarm	MSB at low address	C	C
132-133	2	Temp High Warning	MSB at low address	O	O
134-135	2	Temp Low Warning	MSB at low address	O	O
136-143	8	Reserved			
144-145	2	Vcc High Alarm	MSB at low address	C	C
146-147	2	Vcc Low Alarm	MSB at low address	C	C
148-149	2	Vcc High Warning	MSB at low address	O	O
150-151	2	Vcc Low Warning	MSB at low address	O	O
152-159	8	Reserved			
160-175	16	**Vendor Specific**			
176-177	2	RX Power High Alarm	MSB at low address	C	C
178-179	2	RX Power Low Alarm	MSB at low address	C	C
180-181	2	RX Power High Warning	MSB at low address	O	O
182-183	2	RX Power Low Warning	MSB at low address	O	O
184-185	2	Tx Bias High Alarm	MSB at low address	C	C
186-187	2	Tx Bias Low Alarm	MSB at low address	C	C
188-189	2	Tx Bias High Warning	MSB at low address	O	O
190-191	2	Tx Bias Low Warning	MSB at low address	O	O
192-199	8	Reserved thresholds for channel parameter set 3			
200-207	8	Reserved thresholds for channel parameter set 4			
208-223	16	Vendor Specific			

7.6.5.2 Optional Channel Controls

Upper Memory Page Control Bits are defined in Table 47. (see Table 48 for output amplitude levels)

Table 47 — Vendor Specific and Optional Channel Controls (Page 03)

Address	Bit	Name	Description	Passive Copper, Active Copper, Active Optical	Optical Module
226-237		Vendor Specific			
238	7-4	RX1 output amplitude	Output amplitude levels with no equalization enabled(see Table 48)	O	O
	3-0	RX2 output amplitude	Output amplitude levels with no equalization enabled(see Table 48)	O	O
239	7-4	RX3 output amplitude	Output amplitude levels with no equalization enabled(see Table 48)	O	O
	3-0	RX4 output amplitude	Output amplitude levels with no equalization enabled(see Table 48)	O	O
240	7	Rx4 SQ Disable	Rx Squelch Disable Channel 4	O	O
	6	Rx3 SQ Disable	Rx Squelch Disable Channel 3	O	O
	5	Rx2 SQ Disable	Rx Squelch Disable Channel 2	O	O
	4	Rx1 SQ Disable	Rx Squelch Disable Channel 1	O	O
	3	Tx4 SQ Disable	Tx Squelch Disable Channel 4	O	O
	2	Tx3 SQ Disable	Tx Squelch Disable Channel 3	O	O
	1	Tx2 SQ Disable	Tx Squelch Disable Channel 2	O	O
	0	Tx1 SQ Disable	Tx Squelch Disable Channel 1	O	O
241	7	Rx4 Output Disable	Rx Output Disable channel 4	O	O
	6	Rx3 Output Disable	Rx Output Disable channel 3	O	O
	5	Rx2 Output Disable	Rx Output Disable channel 2	O	O
	4	Rx1 Output Disable	Rx Output Disable channel 1	O	O
	3	Reserved			
	2	Reserved			
	1	Reserved			
	0	Reserved			

Table 48 --- Output amplitude control (address 238-239) (Page 03)

	Code	Receiver Output Amplitude No Output Equalization	
		Nominal	Units
	1xxx	Reserved	
	0111	Reserved	
	0110	Reserved	
	0101	Reserved	
	0100	Reserved	
	0011	600-1200	mV(pk-pk)
	0010	400-800	mV(pk-pk)
	0001	300-600	mV(pk-pk)
	0000	200-400	mV(pk-pk)

Squelch disable and output control functionality are optional; if implemented, squelch disable and output disable are controlled for each channel using bytes 240 and 241 of page 03h. Squelch is normally operational as described in Subclause 4.1.3, High Speed Electrical Specification. Writing a "1" in the Squelch Disable register (byte 240, page 03h) disables the squelch for the associated channel. Writing a "1" in the Output Disable register (byte 241, page 03h) squelches the output of the associated channel. When a "1" is written in both registers for a channel, the associated output is disabled. The registers read all "0"s upon power-up.

7.6.5.3 Channel Monitor Masks

The Masking Bits for the Channel Monitor Functions are defined in Table 49. A mask bit is required whenever a monitor and associated flag is implemented.

Table 49 — Channel Monitor Masks (Page 03)

Address	Bit	Name	Description
242	7	M-Rx1 Power High Alarm	Masking Bit for high RX Power alarm channel 1
	6	M-Rx1 Power Low Alarm	Masking Bit for low RX Power alarm channel 1
	5	M-Rx1 Power High Warning	Masking Bit for high RX Power warning channel 1
	4	M-Rx1 Power Low Warning	Masking Bit for low RX Power warning channel 1
	3	M-Rx2 Power High Alarm	Masking Bit for high RX Power alarm channel 2
	2	M-Rx2 Power Low Alarm	Masking Bit for low RX Power alarm channel 2
	1	M-Rx2 Power High Warning	Masking Bit for high RX Power warning channel 2
	0	M-Rx2 Power Low Warning	Masking Bit for low RX Power warning channel 2
243	7	M-Rx3 Power High Alarm	Masking Bit for high RX Power alarm channel 3
	6	M-Rx3 Power Low Alarm	Masking Bit for low RX Power alarm channel 3
	5	M-Rx3 Power High Warning	Masking Bit for high RX Power warning channel 3
	4	M-Rx3 Power Low Warning	Masking Bit for low RX Power warning channel 3
	3	M-Rx4 Power High Alarm	Masking Bit for high RX Power alarm channel 4
	2	M-Rx4 Power Low Alarm	Masking Bit for low RX Power alarm channel 4
	1	M-Rx4 Power High Warning	Masking Bit for high RX Power warning channel 4
	0	M-Rx4 Power Low Warning	Masking Bit for low RX Power warning channel 4
244	7	M-Tx1 Bias High Alarm	Masking Bit for high TX Bias alarm channel 1
	6	M-Tx1 Bias Low Alarm	Masking Bit for low TX Bias alarm channel 1
	5	M-Tx1 Bias High Warning	Masking Bit for high TX Bias warning channel 1
	4	M-Tx1 Bias Low Warning	Masking Bit for low TX Bias warning channel 1
	3	M-Tx2 Bias High Alarm	Masking Bit for high TX Bias alarm channel 2
	2	M-Tx2 Bias Low Alarm	Masking Bit for low TX Bias alarm channel 2
	1	M-Tx2 Bias High Warning	Masking Bit for high TX Bias warning channel 2
	0	M-Tx2 Bias Low Warning	Masking Bit for low TX Bias warning channel 2
245	7	M-Tx3 Bias High Alarm	Masking Bit for high TX Bias alarm channel 3
	6	M-Tx3 Bias Low Alarm	Masking Bit for low TX Bias alarm channel 3
	5	M-Tx3 Bias High Warning	Masking Bit for high TX Bias warning channel 3
	4	M-Tx3 Bias Low Warning	Masking Bit for low TX Bias warning channel 3
	3	M-Tx4 Bias High Alarm	Masking Bit for high TX Bias alarm channel 4
	2	M-Tx4 Bias Low Alarm	Masking Bit for low TX Bias alarm channel 4
	1	M-Tx4 Bias High Warning	Masking Bit for high TX Bias warning channel 4
	0	M-Tx4 Bias Low Warning	Masking Bit for low TX Bias warning channel 4
246-247	All		
248-249	All		
250-253	All		