SFF Committee documentation may be purchased in hard copy or electronic form.
SFF specifications are available at ftp://ftp.seagate.com/sff

SFF Committee

SFF-8642 Specification

for

MINI MULTILANE SERIES: SHIELDED INTEGRATED CONNECTOR

Rev 2.7 February 26, 2010

Secretariat: SFF Committee

Abstract: This specification defines the physical interface and general performance requirements for the Mini Multilane Shielded Integrated Connector, which is designed for use in high speed serial, interconnect applications at speeds up through 12 Gigabits/second. Usage includes the 120G 12x10 InfiniBand CXP high density external pluggable and the 100G 10x10 Ethernet CXP high density external pluggable.

This specification provides a common reference for systems manufacturers, system integrators, and suppliers. This is an internal working specification of the SFF Committee, an industry ad hoc group.

This specification is made available for public review, and written comments are solicited from readers. Comments received by the members will be considered for inclusion in future revisions of this specification.

The description of a connector in this specification does not assure that the specific component is actually available from connector suppliers. If such a connector is supplied it must comply with this specification to achieve interoperability between suppliers.

Support: This specification is supported by the identified member companies of the SFF Committee.

POINTS OF CONTACT:

Jay Neer
Technical Editor
Molex
2222 Wellington Court
Lisle, Il 60532
Ph: 561-447-2907 x555-3889
Email: jay.neer_at_molex_dot_com

I. Dal Allan
Chairman SFF Committee
14426 Black Walnut Court
Saratoga, CA 95070

Ph: 408-867-6630
Email: endlcom_at_acm_dot_org

Amphenol Exhibit 1026
Amphenol v. Credo

EXPRESSION OF SUPPORT BY MANUFACTURERS

The following member companies of the SFF Committee voted in favor of this industry specification.

EMC
FCI
Fujitsu CPA
Hewlett Packard
Hitachi GST
LSI
Luxtera
Molex
Panduit
Seagate
Toshiba
Tyco

The following member companies of the SFF Committee voted to abstain on this industry specification.

3M
Amphenol
Arista Networks
Cinch
Clariphy
Emulex
ETRI
Finisar
Foxconn
NetApp
OpNext
Panasonic
QLogic
Sandisk/RAD
Vitesse Semiconductor
Volex

The user's attention is called to the possibility that implementation to this Specification may require use of an invention covered by patent rights. By distribution of this Specification, no position is taken with respect to the validity of this claim or of any patent rights in connection therewith. Members of the SFF Committee, which advise that a patent exists, are required to provide a statement of willingness to grant a license under these rights on reasonable and non-discriminatory terms and conditions to applicants desiring to obtain such a license.

Foreword

The development work on this specification was done by the SFF Committee, an industry group. The membership of the committee since its formation in August 1990 has included a mix of companies which are leaders across the industry.

When 2 1/2" diameter disk drives were introduced, there was no commonality on external dimensions e.g. physical size, mounting locations, connector type, and connector location, between vendors.

The first use of these disk drives was in specific applications such as laptop portable computers and system integrators worked individually with vendors to develop the packaging. The result was wide diversity, and incompatibility.

The problems faced by integrators, device suppliers, and component suppliers led to the formation of the SFF Committee as an industry ad hoc group to address the marketing and engineering considerations of the emerging new technology.

During the development of the form factor definitions, other activities were suggested because participants in the SFF Committee faced more problems than the physical form factors of disk drives. In November 1992, the charter was expanded to address any issues of general interest and concern to the storage industry. The SFF Committee became a forum for resolving industry issues that are either not addressed by the standards process or need an immediate solution.

Those companies which have agreed to support a specification are identified in the first pages of each SFF Specification. Industry consensus is not an essential requirement to publish an SFF Specification because it is recognized that in an emerging product area, there is room for more than one approach. By making the documentation on competing proposals available, an integrator can examine the alternatives available and select the product that is felt to be most suitable.

SFF Committee meetings are held during T10 weeks (see www.t10.org), and Specific Subject Working Groups are held at the convenience of the participants. Material presented at SFF Committee meetings becomes public domain, and there are no restrictions on the open mailing of material presented at committee meetings.

Most of the specifications developed by the SFF Committee have either been incorporated into standards or adopted as standards by EIA (Electronic Industries Association), ANSI (American National Standards Institute) and IEC (International Electrotechnical Commission).

If you are interested in participating or wish to follow the activities of the SFF Committee, the signup for membership and/or documentation can be found at:
http://www.sffcommittee.com/ie/join.html

The complete list of SFF Specifications which have been completed or are currently being worked on by the SFF Committee can be found at:
ftp://ftp.seagate.com/sff/SFF-8000.TXT

If you wish to know more about the SFF Committee, the principles which guide the activities can be found at:
ftp://ftp.seagate.com/sff/SFF-8032.TXT

Suggestions for improvement of this specification will be welcome. They should be sent to the SFF Committee, 14426 Black Walnut Ct, Saratoga, CA 95070.

TABLE OF CONTENTS

1. Scope
    1.1 Description of Clauses

2. References
    2.1 Industry Documents
    2.2 SFF Specifications
    2.3 Sources

3. Definitions and Conventions
    3.1 Definitions
    3.2 Conventions

4. Description
    4.1 General View
    4.2 Shielded Integrated Connector Configurations

5. Datum Definitions - Reference

6. Shielded Integrated Connector Dimensional Requirements
    6.1 Shielded Free (Plug) Integrated Connector Paddle Card
    6.2 Shielded Free (Plug) Integrated Cable Connector
    6.3 Shielded Free (Plug) Integrated Cable Connector Pull Tab
    6.4 Shielded Fixed (Receptacle) Right Angle Integrated Connector Dimensions
    6.5 Shielded Fixed (Receptacle) Right Angle Integrated Connector Footprint
    6.6 Shielded Fixed (Receptacle) Right Angle Integrated Connector Ground Pad
    6.7 Shielded Fixed (Receptacle) Right Angle Integrated Connector Panel Cutout
    6.8 Minimum Spacing For Integrated Receptacles
    6.9 Orientation Key
    6.10 Thermal Solution
    6.11 Thermal Interface Definition on Plug
    6.12 Heat Sink Configuration
    6.13 Heat Sink Clip
    6.14 Heat Sink Attach Points on Integrated Receptacle
    6.15 Dust Cover for Integrated Receptacle Ports

7. Performance Requirements
    7.1 Electrical
    7.2 Mechanical
    7.3 Environmental

FIGURES

FIGURE 3.1 Mating Side Gender Definition
FIGURE 4.1 General View Of A Shielded Integrated Connector
FIGURE 5.1 Definition of Datums
FIGURE 6.1 Shielded Free (Plug) Connector Paddle Card Dimensions
FIGURE 6.2 Shielded Free (Plug) Integrated Cable Connector
FIGURE 6.3 Shielded Free (Plug) Integrated Cable Connector Pull Tab
FIGURE 6.4 Shielded Fixed (Receptacle) Right Angle Integrated Connector Dimensions
FIGURE 6.5 Shielded Fixed (Receptacle) Right Angle Integrated Connector Footprint
FIGURE 6.6 Shielded Fixed (Receptacle) Right Angle Integrated Connector Ground Pad Dimensions
FIGURE 6.7 Shielded Fixed (Receptacle) Right Angle Integrated Connector Panel Cutout
FIGURE 6.8 Minimum Horizontal & Vertical Pitch

FIGURE 6.9 Orientation Key
FIGURE 6.10 Integrated Receptacle Connector with Spring-loaded Heat sink & Clip
FIGURE 6.11 Thermal Interface Definition for Integrated Plug Connector
FIGURE 6.12 Heat Sink Thermal Interface Profile for Integrated Receptacle
FIGURE 6.13 Heat Sink Clip Dimensions
FIGURE 6.14 Heat Sink Clip Attach Points
FIGURE 6.15 Dust Cover Dimensions

TABLES

TABLE 5.1 Definition of Datums
TABLE 6.1 Shielded Free (Plug) Connector Paddle Card Dimensions
TABLE 6.2 Shielded Free (Plug) Integrated Cable Connector Dimensions
TABLE 6.3 Shielded Free (Plug) Integrated Cable Connector Pull Tab
TABLE 6.4 Shielded Fixed (Receptacle) Right Angle Integrated Connector Dimensions
TABLE 6.5 Shielded Fixed (Receptacle) Right Angle Integrated Connector Footprint
TABLE 6.6 Shielded Fixed (Receptacle) Right Angle Integrated Connector Ground Pad Dimensions
TABLE 6.7 Shielded Fixed (Receptacle) Right Angle Integrated Connector Panel Cutout Dimensions
TABLE 6.8 Dimensions for Minimum Port Spacing
TABLE 6.9 Key/Keyway Dimensions
TABLE 6.11 Thermal Interface Dimensions for Integrated Plug Connector
TABLE 6.12 Heat Sink Thermal Interface Dimensions
TABLE 6.14 Heat Sink Attach Point Dimensions
TABLE 6.15 Dust Cover Dimensions

SFF Committee

Mini Multilane Shielded Integrated Connector

1. Scope

This specification defines the plug, guide/strain relief shell, and latching requirements for the Mini Multilane Shielded Integrated Connector based upon the mating interface defined herein.

1.1 Description of Clauses

Clause 1 contains the Scope
Clause 2 contains References, Related Standards and SFF Specifications
Clause 3 contains the Definitions and Conventions
Clause 4 contains the Description
Clause 5 defines the Datums
Clause 6 defines the Dimensions

2. References

The SFF Committee activities support the requirements of the storage industry, and it is involved with several standards.

2.1 Industry Documents

The following interface standards and specifications are relevant to this Specification.

- EIA-364 Test Procedures
- SFF-8410 High Speed Serial Testing for Copper Links
- SFF-8643 Mini Multilane Series: Unshielded Integrated HD Connector
- SFF-8644 Mini Multilane Series: Shielded Integrated HD Connector
- InfiniBand Architecture Volume 1.2, Annex 6

2.2 SFF Specifications

There are several projects active within the SFF Committee. The complete list of specifications which have been completed or are still being worked on are listed in the specification at ftp://ftp.seagate.com/sff/SFF-8000.TXT

2.3 Sources

Those who join the SFF Committee as an Observer or Member receive electronic copies of the minutes and SFF specifications (http://www.sffcommittee.com/ie/join.html).

Copies of ANSI standards may be purchased from the International Committee for Information Technology Standards (http://tinyurl.com/c4psg).

3. Definitions and Conventions

3.1 Definitions

For the purpose of SFF Specifications, the following definitions apply:

Fixed: Used to describe the gender of the mating side of the connector that accepts its mate upon mating. This gender is frequently, but not always, associated with the common terminology “receptacle”. Other terms commonly used are “female” and “socket connector”. The term “fixed” is adopted from EIA standard terminology as the gender that most commonly exists on the fixed end of a connection, for example, on the board or bulkhead side. In this specification “fixed” is specifically used to describe the mating side gender illustrated in Figure 2.

Free: Used to describe the gender of the mating side of the connector that penetrates its mate upon mating. This gender is frequently, but not always, associated with the common terminology “plug”. Other terms commonly used are “male” and “pin connector”. The term “free” is adopted from EIA standard terminology as the gender that most commonly exists on the free end of a connection, for example, on the cable side. In this specification “free” is specifically used to describe the mating side gender illustrated in Figure 2.

Height: Distance from board surface to farthest overall connector feature

Mating Side: The side of the connector that joins and separates from the mating side of a connector of opposite gender. Other terms commonly used in the industry are mating interface, separable interface and mating face.

FIGURE 3.1. Mating Side Gender Definition

Press-fit: The connector's press-fit pins are pressed into the plated through holes in the PCB by applying mechanical force. The pins are sized to deform to create a

lasting gas-tight electrical connection between the press-fit pin and the metalized hole. The press-fit pins ensure the mechanical stability and the electrical contact.

Right Angle: A connector design for use with printed circuit board assembly technology where the mating direction is parallel to the plane of the printed circuit board.

Straight: A connector design for use with printed circuit board assembly technology where the mating direction is perpendicular to the plane of the printed circuit board.

Surface Mount: A connector design and a printed circuit board design style where the connector termination points do not penetrate the printed circuit board and are subsequently soldered to the printed circuit board.

Termination Side: The side of the connector opposite the mating side that is used for permanently attaching conductors to the connector. Due to pin numbering differences between mating side genders the termination side shall always be specified in conjunction with a mating side of a specific gender. Other terms commonly used in the industry are: back end, non-mating side, footprint, pc board side, and post side.

Through Hole: A connector design and a printed circuit board design style where the connector termination points penetrates the printed circuit board and are subsequently soldered to the printed circuit board.

3.2 Conventions

The ISO convention of numbering is used i.e., the thousands and higher multiples are separated by a space and a period is used as the decimal point. This is equivalent to the English/American convention of a comma and a period.

English	French	ISO
0.6	0,6	0.6
1,000	1 000	1 000
1,323,462.9	1 323 462,9	1 323 462.9

4. Description

The connector system is based upon a shielded integrated receptacle connector and guide shell. The host board footprint positioning holes contain the critical dimensions for locating the integrated receptacle guide shell. The receptacle guide shell functions as the guide and strain relief for the free (plug) connector interface. This connector system provides positive retention along with ease of insertion and removal.

4.1 General View

FIGURE 4.1 illustrates an example of one configuration of the Shielded Integrated Connector.

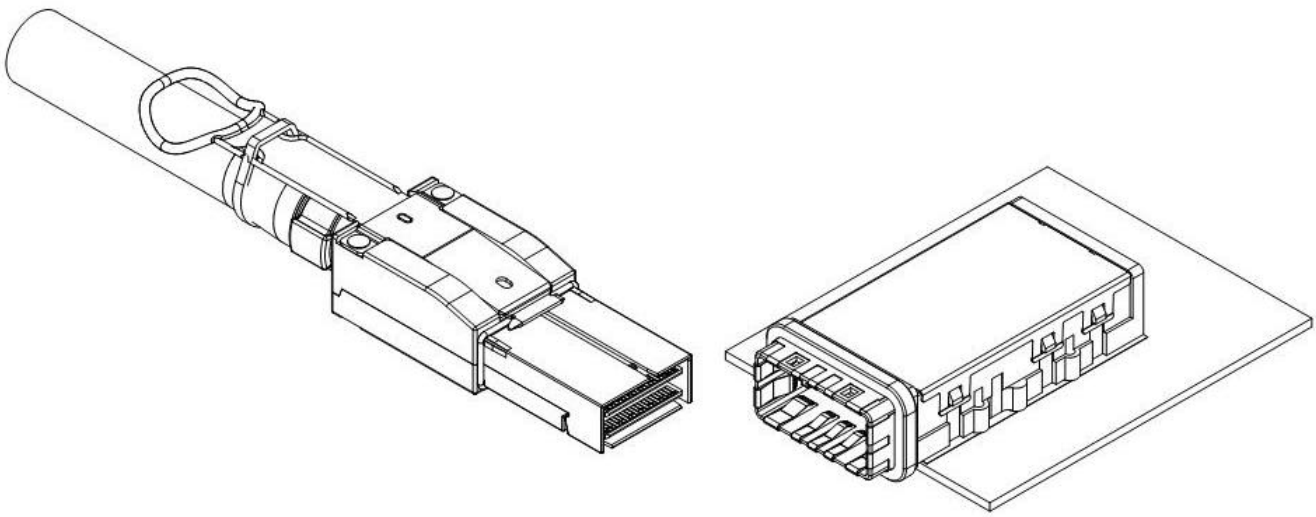

FIGURE 4.1 General View Of A Shielded Integrated Connector

4.2 Shielded Integrated Connector Configurations

The configuration defined in this specification is an integrated right angle 84 position host board receptacle and it’s mating cable plug connector.

5. Datum Definitions - Reference

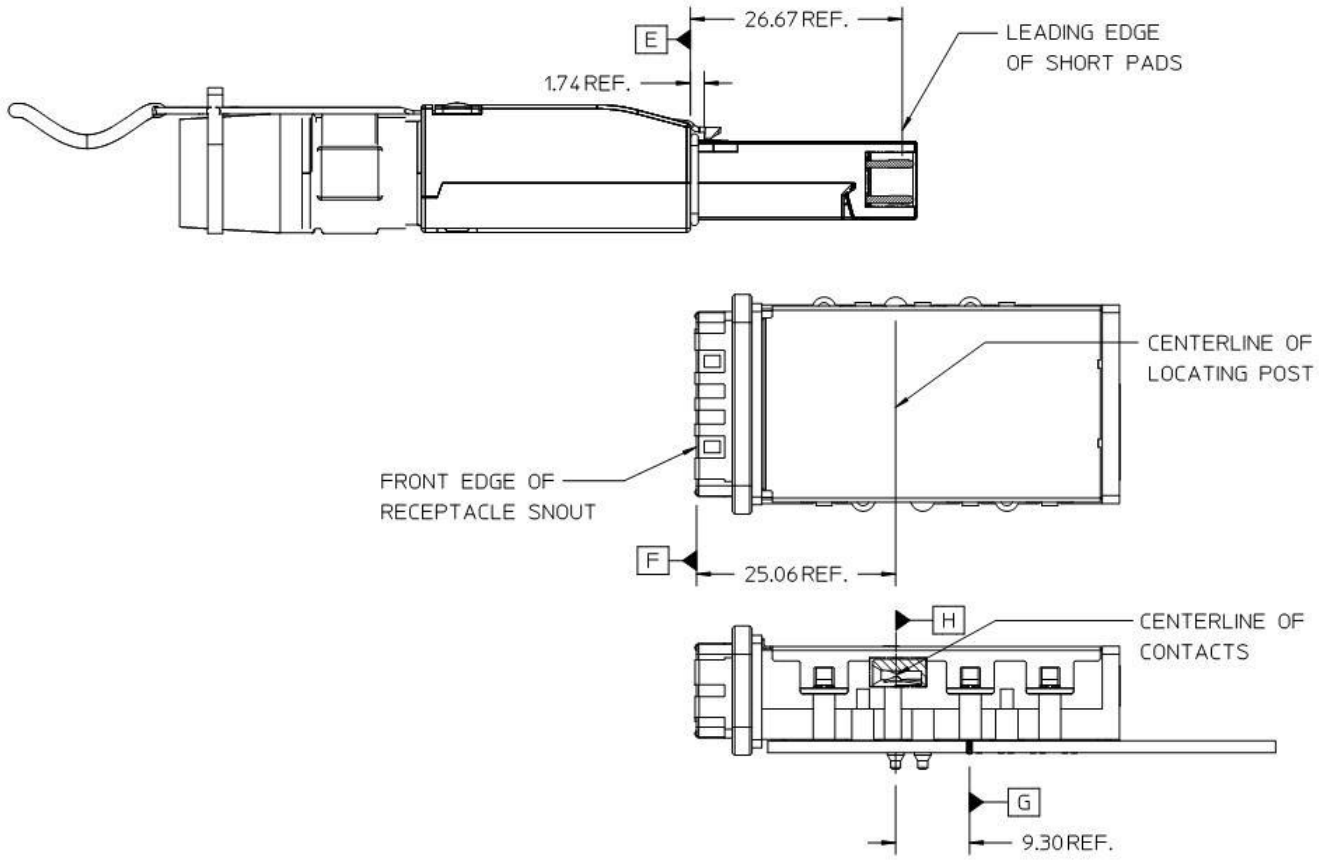

FIGURE 5.1 Definition of Datums

TABLE 5.1 Definition of Datums

Datum	Description
A	Width of Paddle Card
B	Top Surface of Paddle Card
C	Leading Edge of Short Signal Pad on Paddle Card
D	Width of Plug Snout
E	Body of Plug
F	Front Edge of Receptacle Snout (does not include EMI Fingers)
G	Centerline of First Row of Connector Compliant Tails
H	Centerline of Receptacle Contacts
J	Centerline of Outer Holes
K	Centerline of First Row of PCB Holes
L	Surface of PCB
M	Width of Receptacle Snout
N	Bottom of Die Cast Housing
P	Bottom of Plug Snout
X, Y	Reference 0, 0 on Host Board (application specific)

The dimensioning conventions are described in ANSI-Y14.5M, Geometric Dimensioning and Tolerancing. All dimensions are in millimeters.

Dimension related requirements for the connector system addressed in this document are specified in the tables and figures in this clause.

6. Shielded Integrated Connector Dimensional Requirements

6.1 Shielded Free (Plug) Integrated Connector Paddle Card

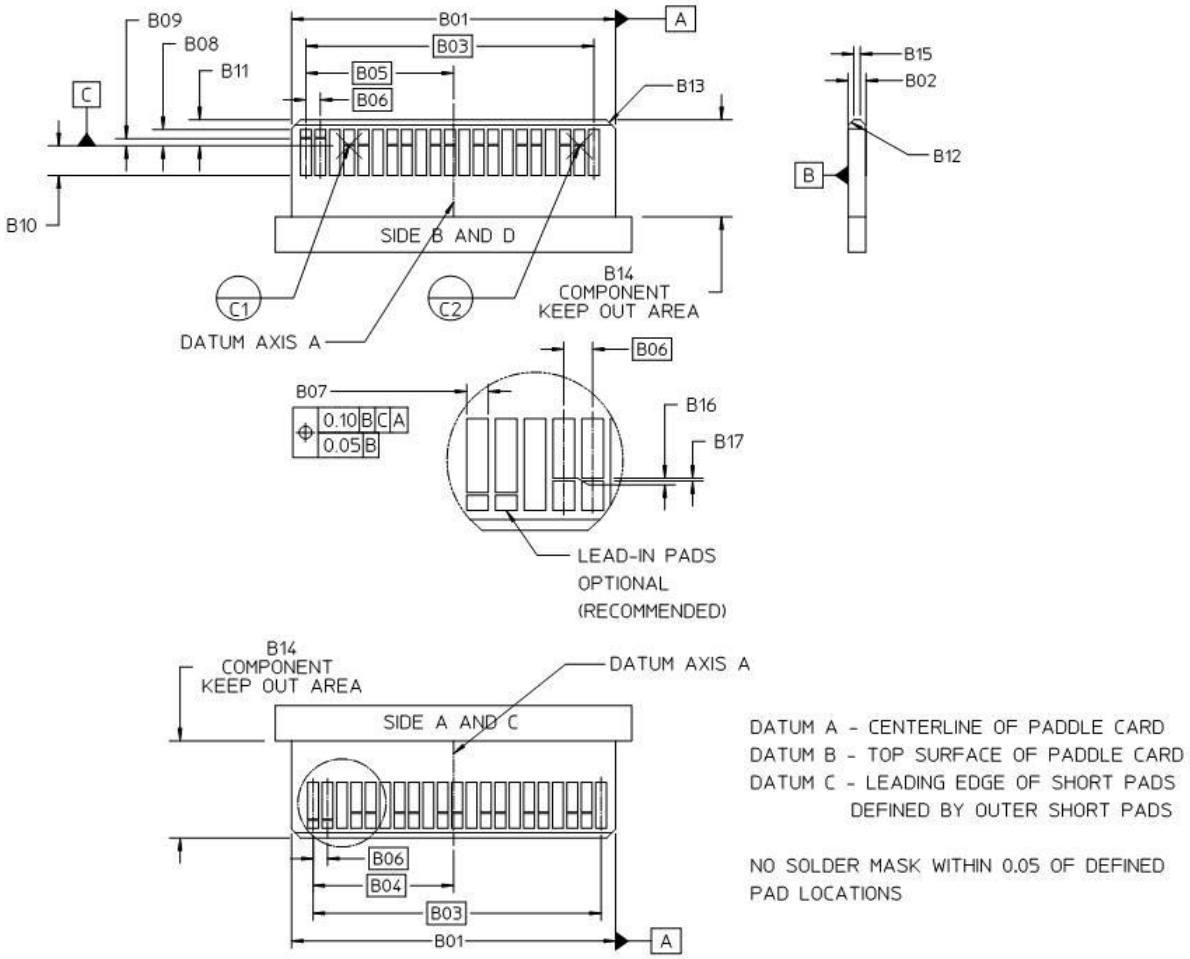

FIGURE 6.1 Shielded Free (Plug) Connector Paddle Card Dimensions

TABLE 6.1 Shielded Free (Plug) Connector Paddle Card Dimensions

Designator	Description	Dimension	Tolerance
B01	Paddle Card Width	18.00	0.10
B02	Paddle Card Thickness	1.00	0.10
B03	Overall Pad Centers	16.00	Basic
B04	Card Center to Outer Pad – Sides A& C	7.80	Basic
B05	Card Center to Outer Pad – Sides B& D	8.20	Basic
B06	Pad Center to Center (Pitch)	0.80	Basic
B07	Pad Width	0.60	0.03
B08	Front Pad Length	0.90	0.05
B09	Front Pad Spacing	0.40	0.05
B10	Pad Length	1.55	Min.
B11	Card Edge to Second Pad	1.45	0.10
B12	Lead-in Chamfer x 45º	0.30	0.05
B13	Lead-in Chamfer x 45º	0.50	0.05
B14	Component Keep Out Area	5.40	Min.
B15	Lead-in Flat	0.36	Ref
B16	Short Pad to Datum C	0.00	0.03
B17	Pad to Lead-in Pad	0.08	0.015

6.2 Shielded Free (Plug) Integrated Cable Connector

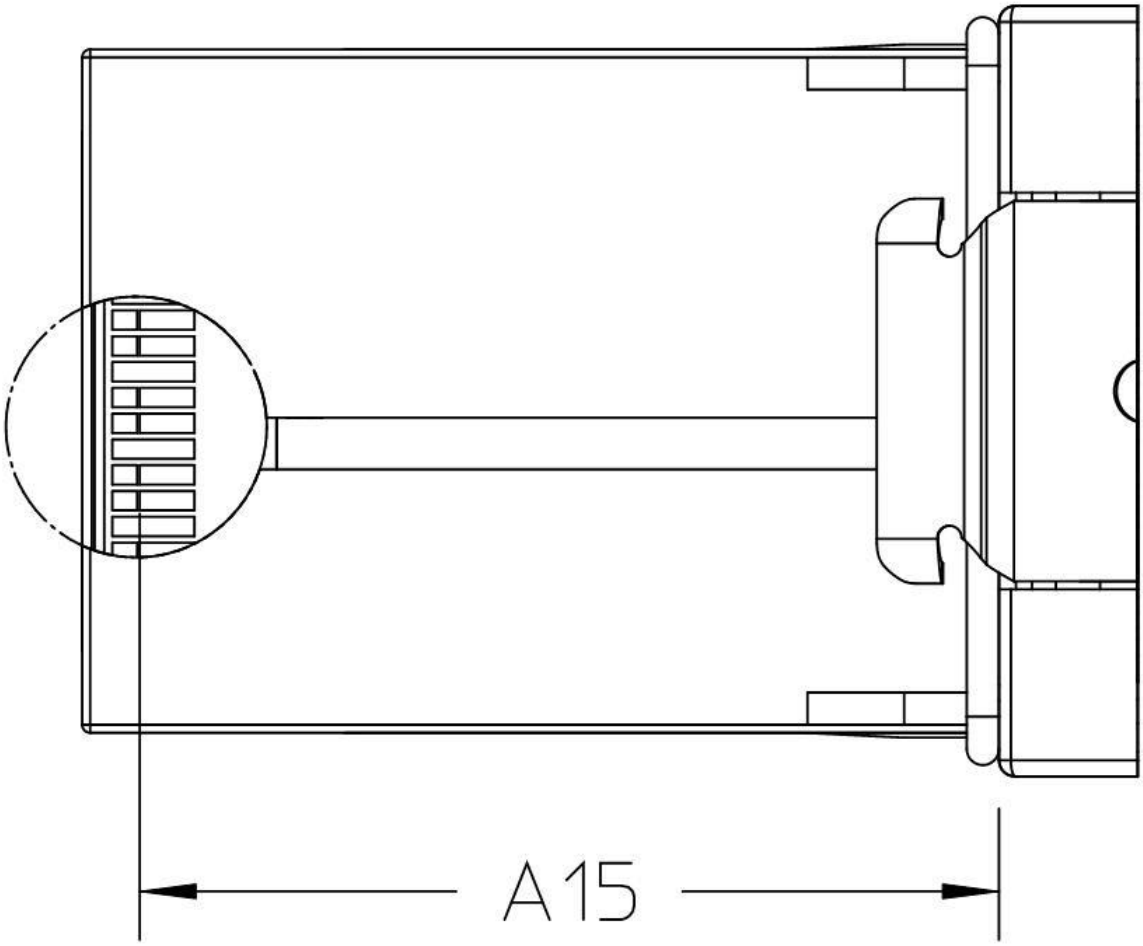

Location of Paddle Card/Contacts and Key Taper to Plug Housing

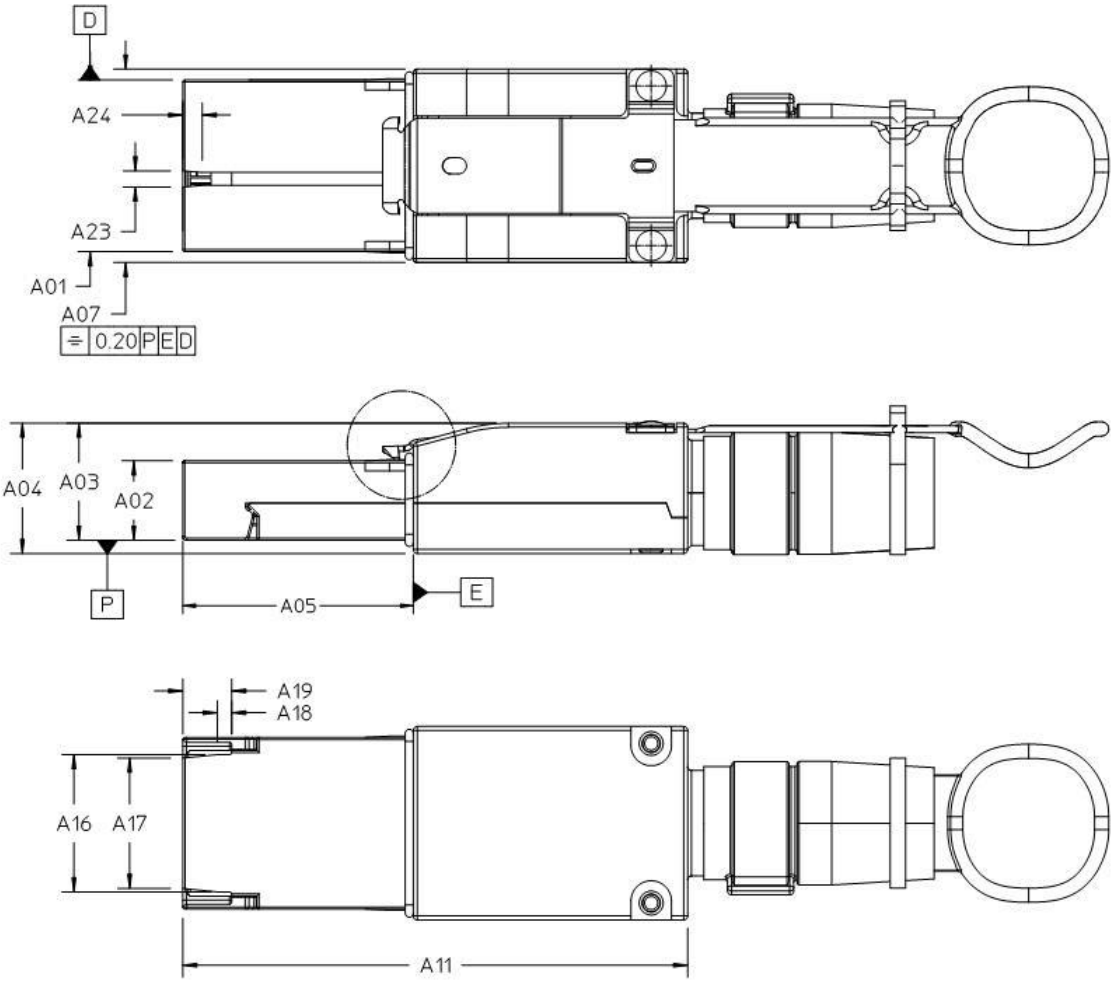
D
A24
A23
A01
A07
0.20 P E D
A04
A03
A02
P
A05
E
A19
A18
A16
A17
A11

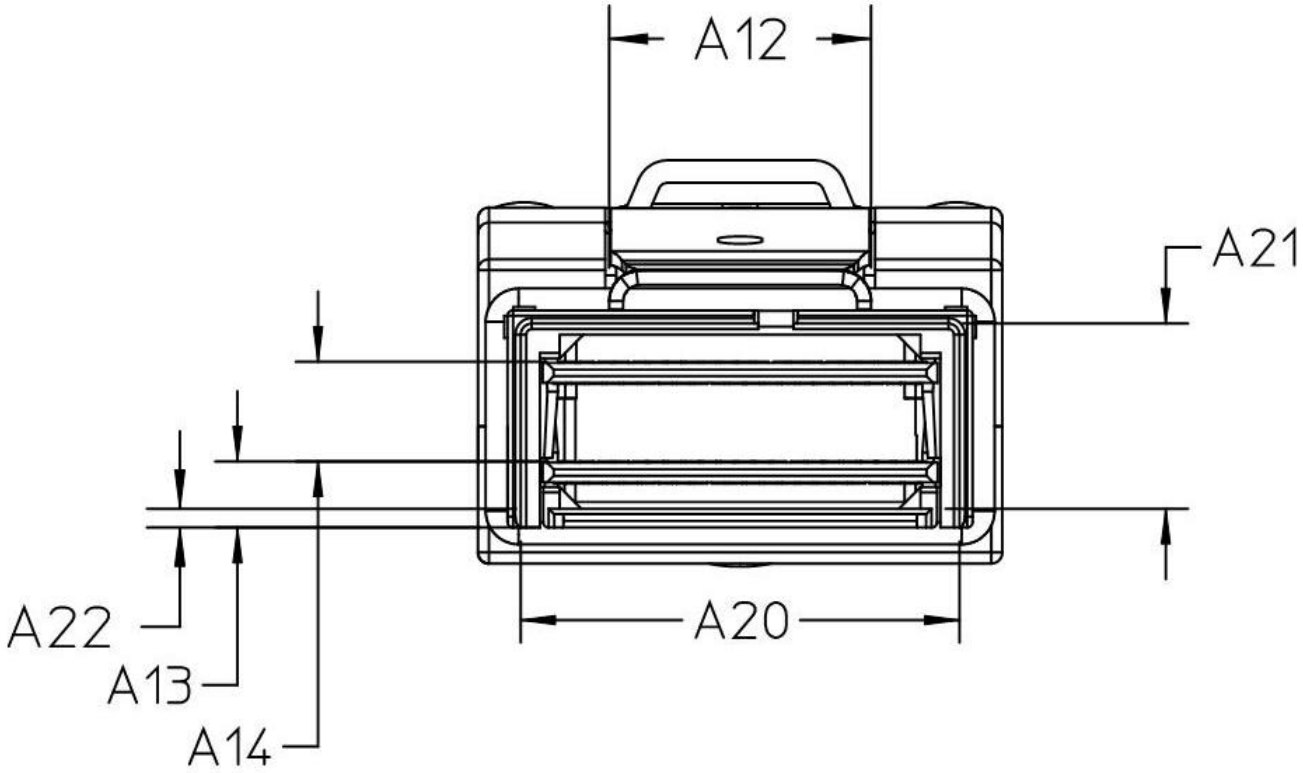

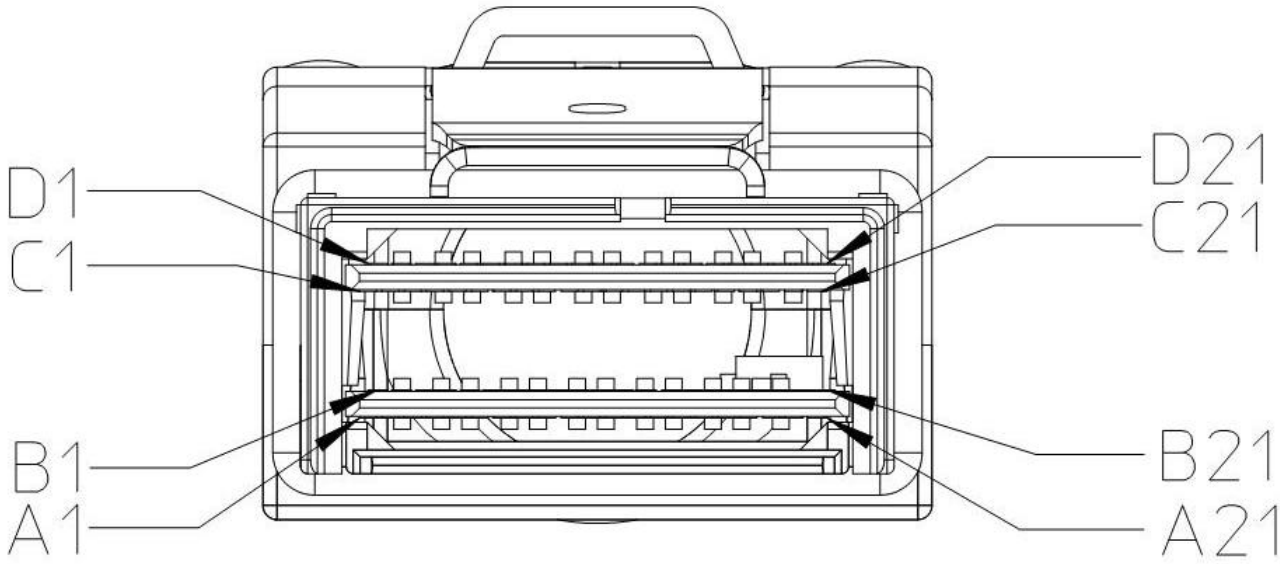

Plug Pin assignments

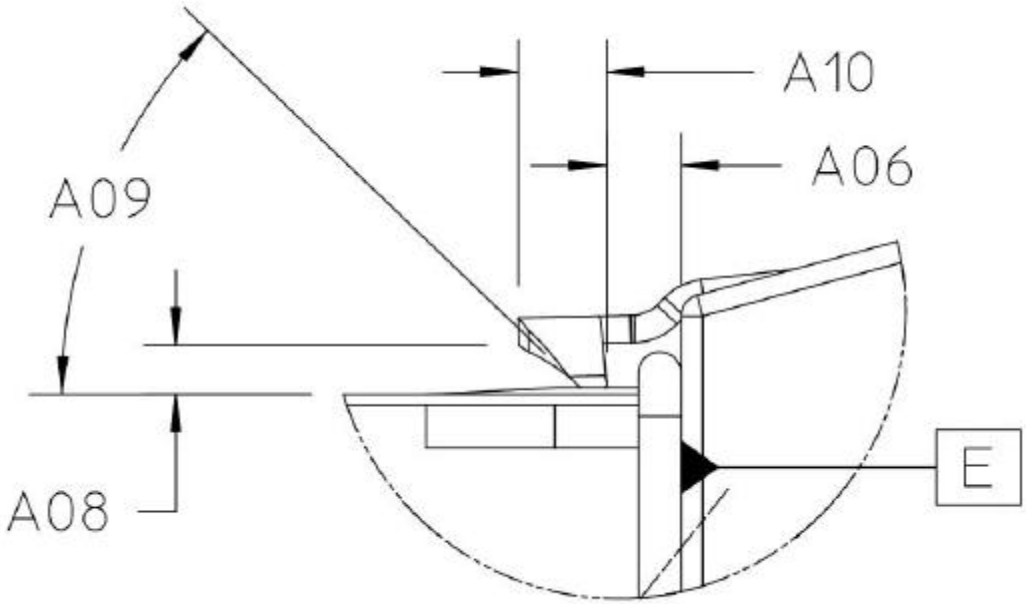

Latch Detail

FIGURE 6.2 Shielded Free (Plug) Integrated Cable Connector

TABLE 6.2 Shielded Free (Plug) Integrated Cable Connector Dimensions

Designator	Description	Dimension	Tolerance
A01	Snout Width	21.20	0.13
A02	Snout Thickness	9.81	0.13
A03	Snout Bottom to Plug Top	14.60	Max
A04	Plug Body Thickness	16.21	Max
A05	Snout Length	28.45	0.13
A06	Plug Body (Datum E) to Latch	1.74	0.13
A07	Body Width	24.05	Max
A08	Barb Lead-in Height	1.14	0.10
A09	Barb Lead-in Angle	45º	1º
A10	Barb Length	2.05	0.10
A11	Plug Overall Length	62.00	Ref.
A12	Latch Width	11.90	0.10
A13	Bottom of Snout to Top of 1st Paddle Card	2.99	0.20
A14	Top of 1st Paddle Card to Top of 2nd Paddle Card	4.50	0.10
A15	Plug Body to Short Pad (Datum C)	26.67	0.20
A16	Tongue Width - Base	16.95	0.10
A17	Tongue Width - Tip	16.10	0.20
A18	Length of Tongue - Straight Section	1.80	0.10
A19	Length of Tongue	6.00	Min.
A20	Inside Width of Snout	20.00	0.05
A21	Inside Height of Snout	8.60	0.25
A22	Tongue Thickness	0.60	Ref.
A23	Orientation Key Lead-In Width	2.00	0.25
A24	Orientation Key Lead-In Length	2.40	0.25

6.3 Shielded Free (Plug) Integrated Cable Connector Pull Tab

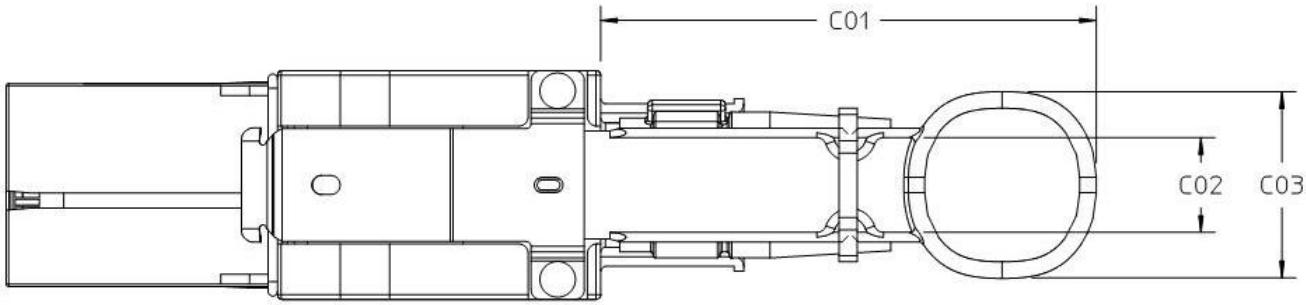

Figure shown is the original design and is one possible configuration.
Pull tab color may be specified by an application standard.

FIGURE 6.3 Shielded Free (Plug) Integrated Cable Connector Pull Tab

TABLE 6.3 Shielded Free (Plug) Integrated Cable Connector Pull Tab

Designator	Description	Dimension	Tolerance
C01	Pull Tab Length	50.00	Ref
C02	Pull Tab Width	9.91	Ref
C03	Pull Tab Hole Width	19.51	Ref

6.4 Shielded Fixed (Receptacle) Right Angle Integrated Connector Dimensions

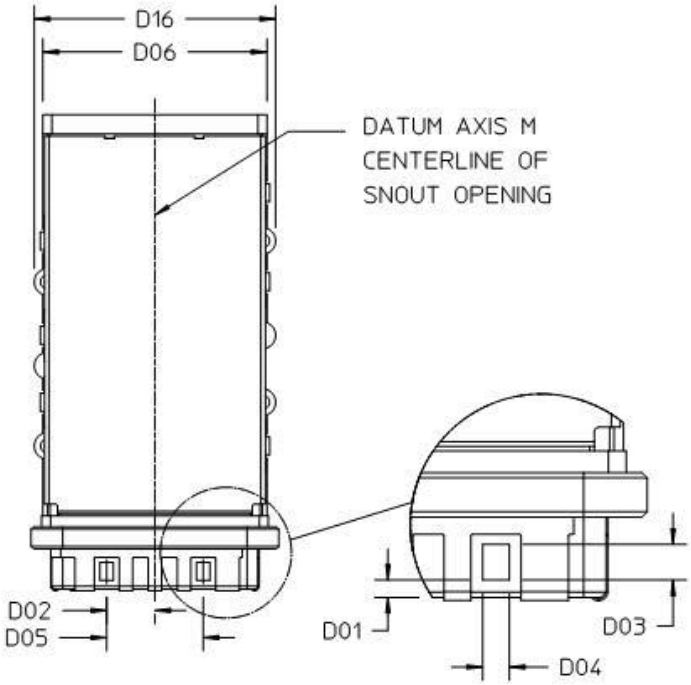

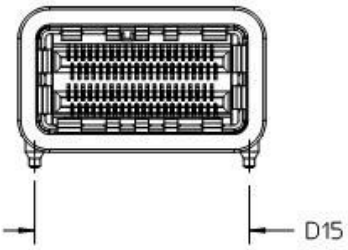

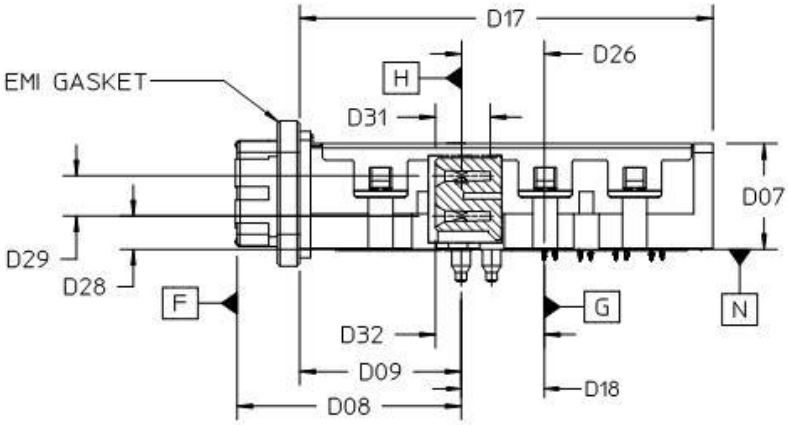

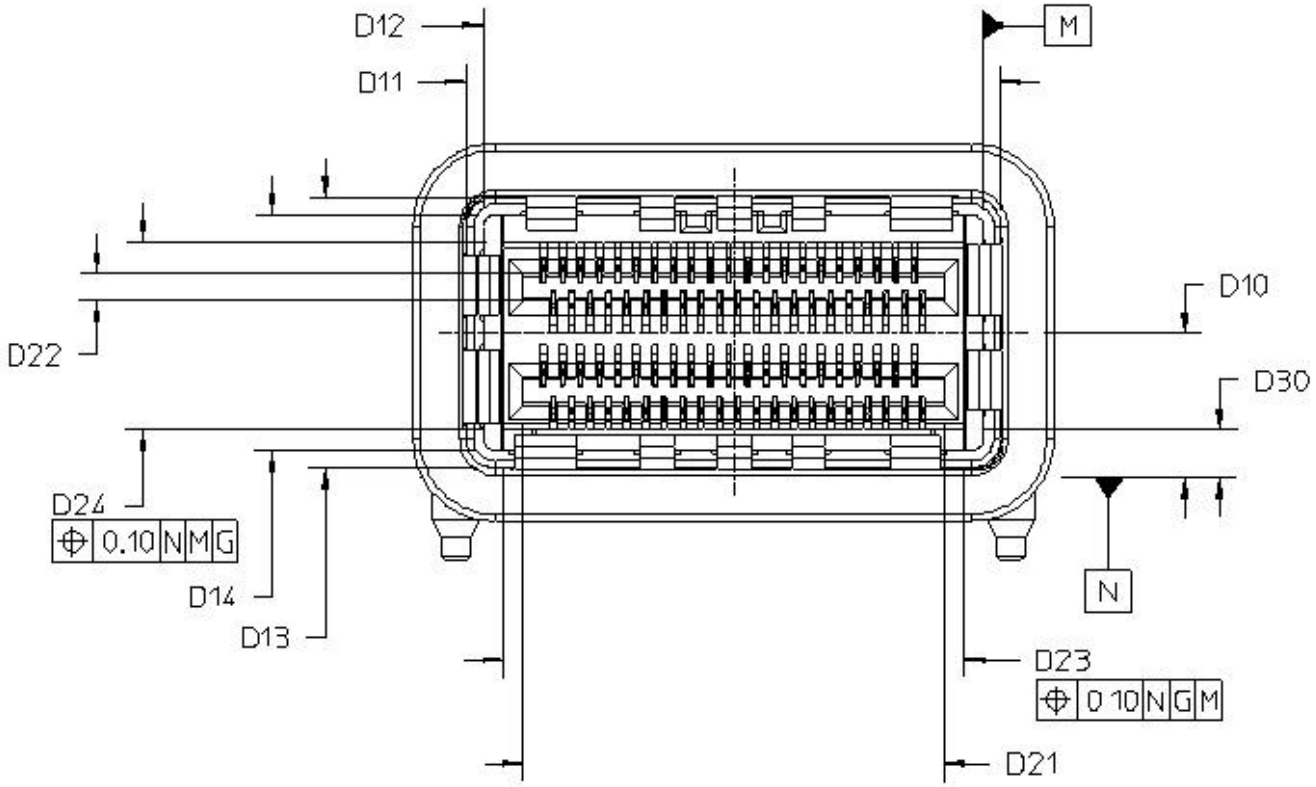
D12
D11
M
D10
D22
D30
D24
0.10 N M G
D14
D13
N
D23
0.10 N G M
D21

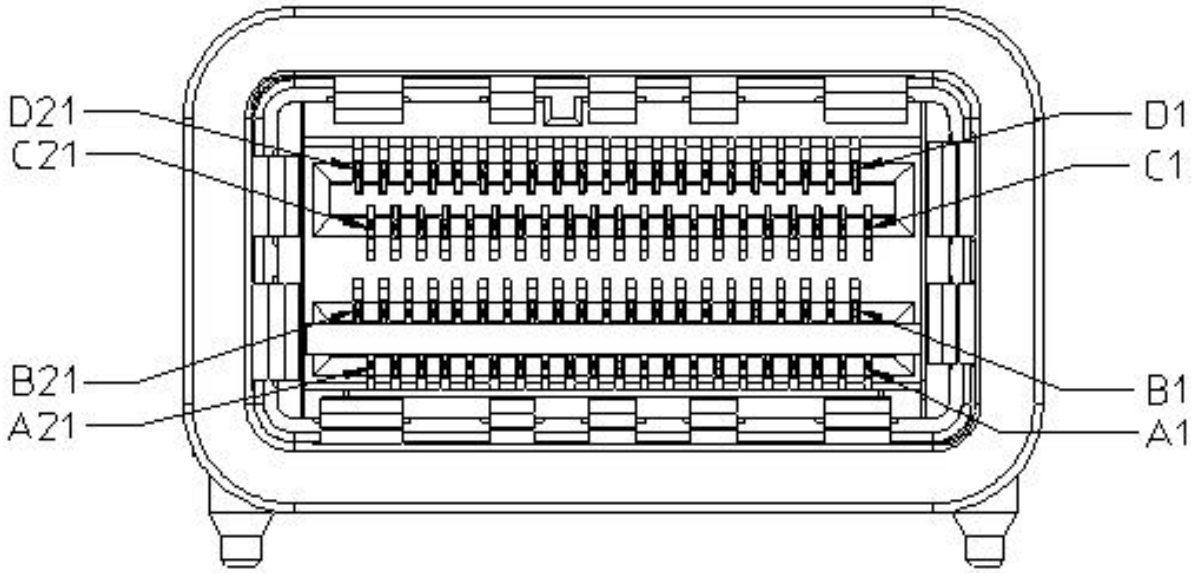
D21
C21
D1
C1
B21
A21
B1
A1

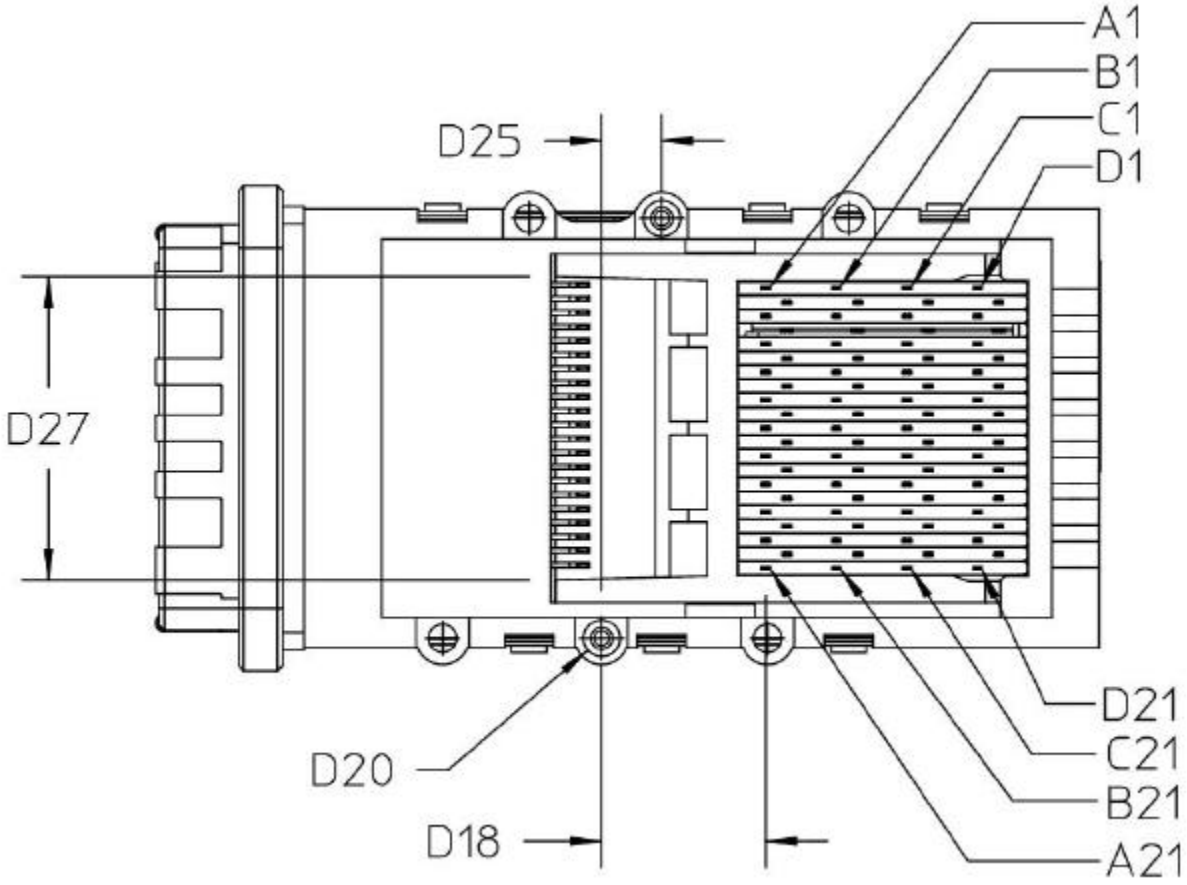

FIGURE 6.4 Shielded Fixed (Receptacle) Right Angle Integrated Connector Dimensions

Designator	Description	Dimension	Tolerance
D01	Latch Hole from Face	0.97	0.05
D02	Latch Hole Centerline from Datum M	5.40	0.10
D03	Latch Hole Length	2.00	0.10
D04	Latch Hole Width	1.50	0.10
D05	Latch Hole to Hole	10.80	0.05
D06	Shell Width	25.05	0.25
D07	Shell Height	11.88	0.13
D08	Locating Post to Face	25.06	0.08
D09	Locating Post to EMI Shell Base	18.06	0.13
D10	Datum N to Snout Opening Centerline	6.29	0.08
D11	Snout Width	23.10	0.08
D12	Snout Opening Width	21.60	0.05
D13	Snout Height	11.70	0.08
D14	Snout Opening Height	10.20	0.05
D15	Peg Centerline to Peg Centerline	24.00	0.08
D16	Shell Width at Screw Attach Features	27.00	0.25
D17	EMI Shell Base to Back	46.22	0.25
D18	Connector Pins to Locating Post	9.30	0.05
D20	Peg Diameter	2.08	0.05
D21	Card Slot Width	18.20	0.05
D22	Card Slot Height	1.20	0.05
D23	Receptacle Body Width	19.89	0.05
D24	Receptacle Body Height	8.15	0.08
D25	Peg Centerline to Peg Centerline	3.41	0.05
D26	Contact C/L to 1st Row of Compliant Pins	9.25	0.10
D27	Housing Leg to Leg	17.35	0.05
D28	Datum N to Lower Card Slot Centerline	3.75	0.10
D29	Lower Card Slot to Upper Card Slot Centerline	4.50	0.10
D30	Datum N to Bottom of Receptacle Housing	2.10	0.10
D31	Card Slot Depth	6.13	0.08
D32	Datum G to Front of Receptacle Housing	12.17	0.10

Table 6.4 SHIELDED FIXED (RECEPTACLE) RIGHT ANGLE INTEGRATED CONNECTOR DIMENSIONS

6.5 Shielded Fixed (Receptacle) Right Angle Integrated Connector Footprint

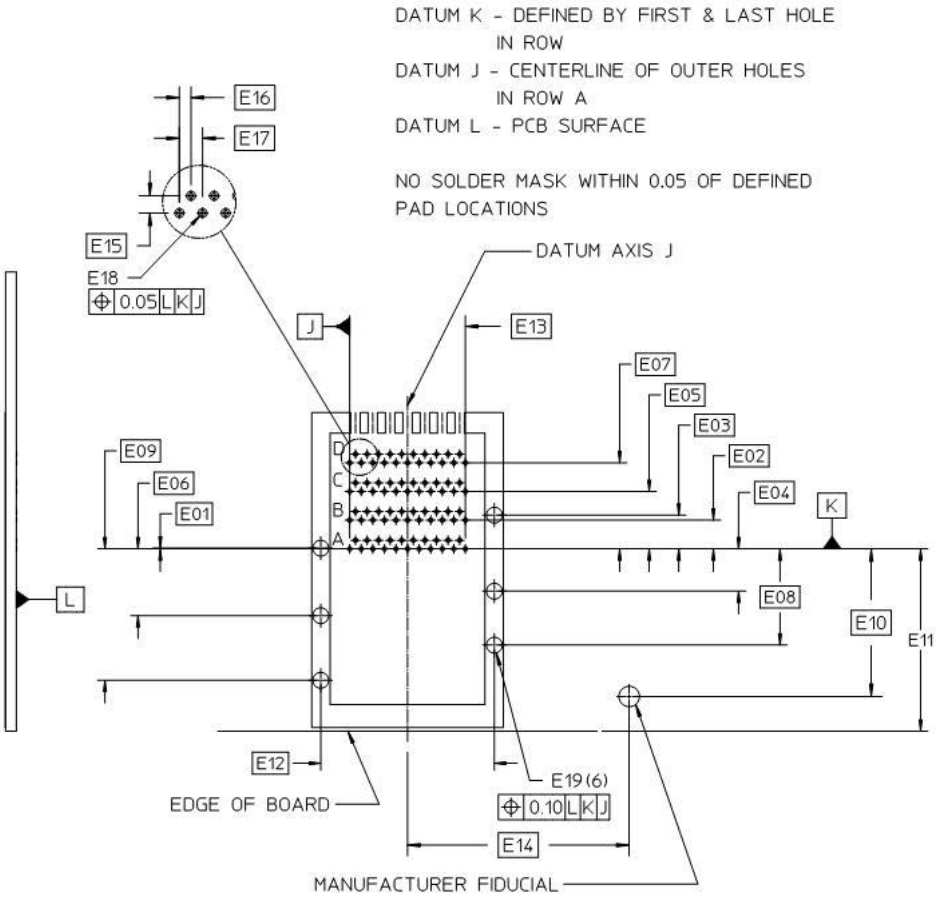

FIGURE 6.5 Shielded Fixed (Receptacle) Right Angle Integrated Connector Footprint

TABLE 6.5 Shielded Fixed (Receptacle) Right Angle Integrated Connector Footprint

Designator	Description	Dimension	Tolerance
E01	Shield Screw Hole to Datum K	0.10	Basic
E02	Row A (Datum K) to Row B	4.00	Basic
E03	Shield Screw Hole to Datum K	4.70	Basic
E04	Shield Post Hole to Datum K	5.89	Basic
E05	Row A (Datum K) to Row C	8.00	Basic
E06	Shield Post Hole to Datum K	9.30	Basic
E07	Row A (Datum K) to Row D	12.00	Basic
E08	Shield Screw Hole to Datum K	13.40	Basic
E09	Shield Screw Hole to Datum K	18.30	Basic
E10	Connector Datum to Manufacturer Fiducial	Basic	N/A
E11	Connector Datum to Card Edge	25.38	0.25
E12	Shield Mounting Hole to Mounting Hole	24.00	Basic
E13	Shield Pin Center to Center	16.00	Basic
E14	Connector Datum to Manufacturer Fiducial	Basic	N/A
E15	Within Row Pitch - Front to Back	1.20	Basic
E16	Within Row Horizontal Offset	0.80	Basic
E17	Within Row Pitch - Horizontal	1.60	Basic
E18	Contact Hole Diameter (finished PTH)	0.37	0.05
E19	Shield Mounting Hole Diameter (finished PTH)	2.20	0.05

6.6 Shielded Fixed (Receptacle) Right Angle Integrated Connector Ground Pad

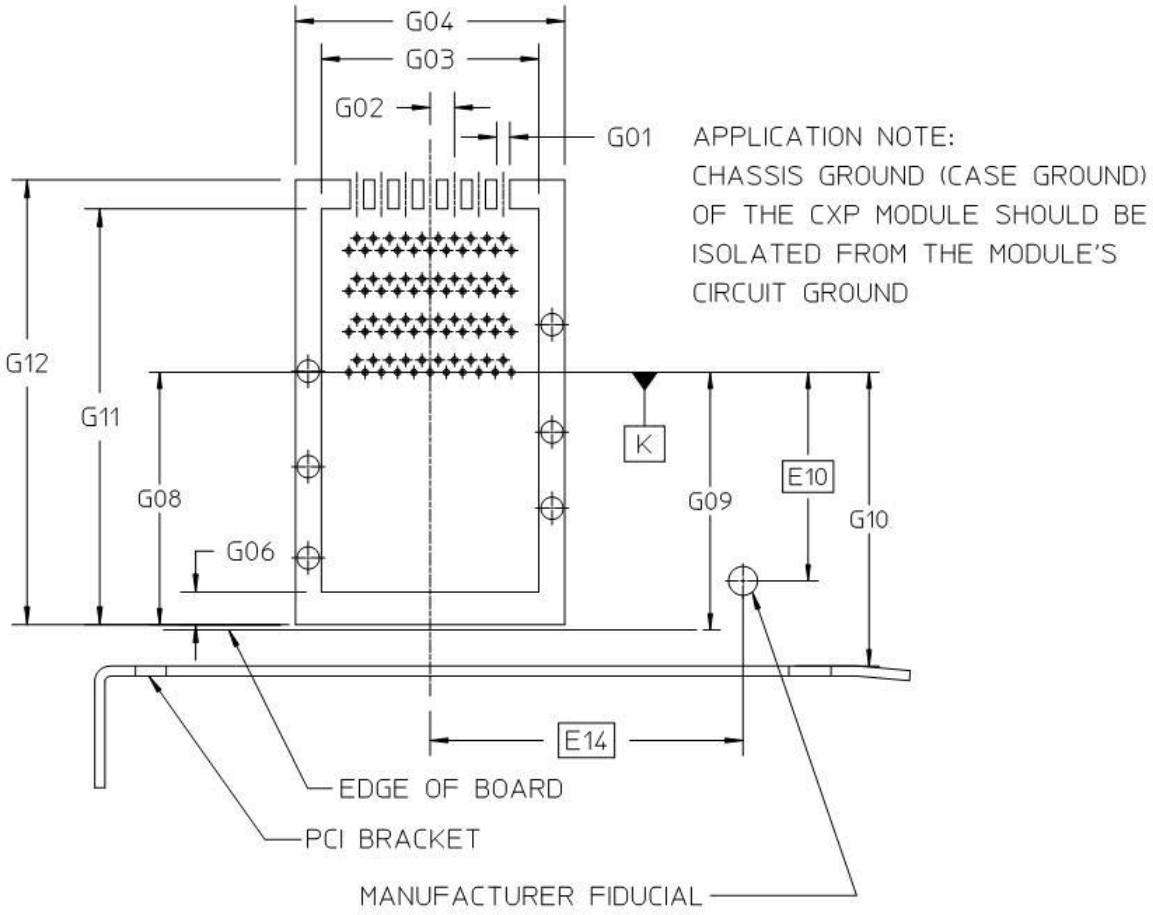

FIGURE 6.6 Shielded Fixed (Receptacle) Right Angle Integrated Connector Ground Pad Dimensions

TABLE 6.6 Shielded Fixed (Receptacle) Right Angle Integrated Connector Ground Pad Dimensions

Designator	Description	Dimension	Tolerance
G01	Ground Pad Alley Width	1.30	0.10
G02	Ground Pad Alley Spacing	2.40	0.10
G03	Ground Pad Inner Width	21.40	0.10
G04	Ground Pad Width	26.49	0.10
G05	Pad Center to Manufacturer Fiducial	Basic	N/A
G06	Ground Pad Width	3.21	0.10
G07	Connector Datum to Manufacturer Fiducial	Basic	N/A
G08	Connector Datum to Front Pad Edge	24.88	0.10
G09	Connector Datum to Card Edge	25.38	Ref
G10	Connector Datum to Bezel	28.96	0.25
G11	Ground Pad Edge to Inside Pad Edge	40.99	0.10
G12	Ground Pad Length	43.84	0.10

6.7 Shielded Fixed (Receptacle) Right Angle Integrated Connector Panel Cutout

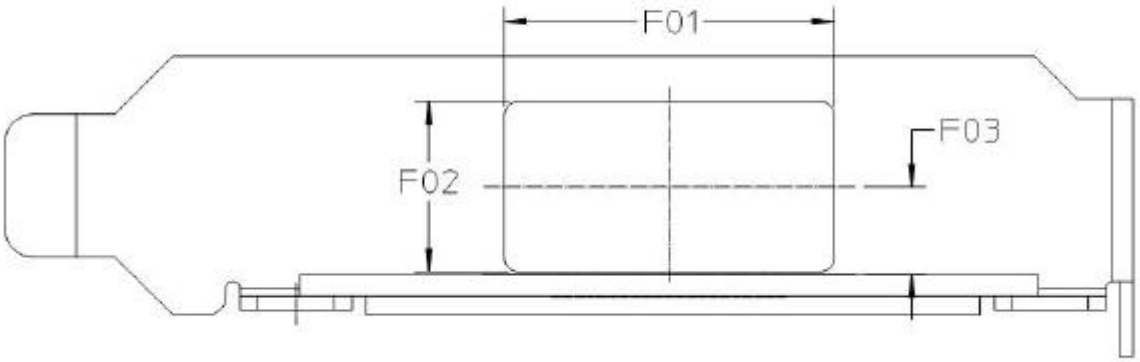

(Low profile PCIE card bracket shown for reference)

FIGURE 6.7 Shielded Fixed (Receptacle) Right Angle Integrated Connector Panel Cutout

TABLE 6.7 Shielded Fixed (Receptacle) Right Angle Integrated Connector Panel Cutout Dimensions

Designator	Description	Dimension	Tolerance
F01	Cutout Length	23.50	0.05
F02	Cutout Height	12.10	0.05
F03	Cutout Location from PCB Surface	6.29	0.05

6.8 Minimum Spacing For Integrated Receptacles

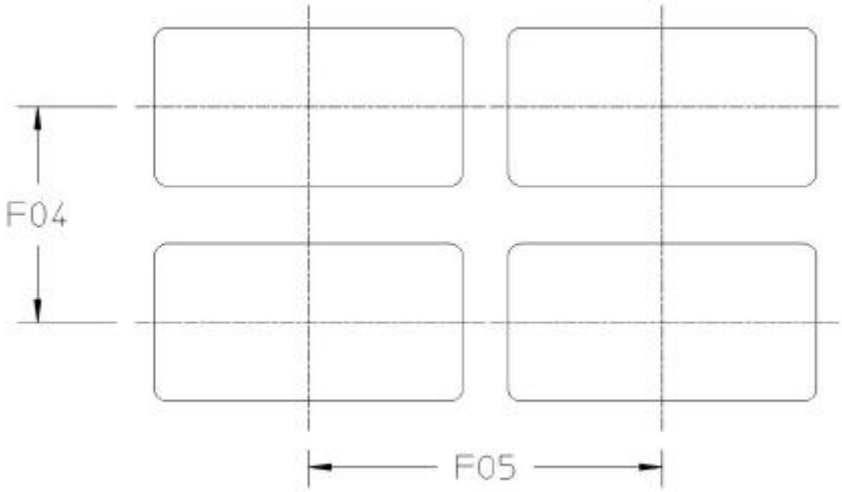

FIGURE 6.8 Minimum Horizontal & Vertical Pitch

TABLE 6.8 Dimensions for Minimum Port Spacing

Designator	Description	Dimension	Tolerance
F01	Cutout Length	23.50	0.05
F02	Cutout Height	12.10	0.05
F03	Cutout Location from PCB Surface	6.29	0.05

Designator	Description	Dimension	Tolerance
F04	Vertical Pitch	16.50	Min
F05	Horizontal Pitch (individual receptacles)	27.00	Min

6.9 Orientation Key

An orientation key is required to assure that the plug is inserted into the receptacle right side up.

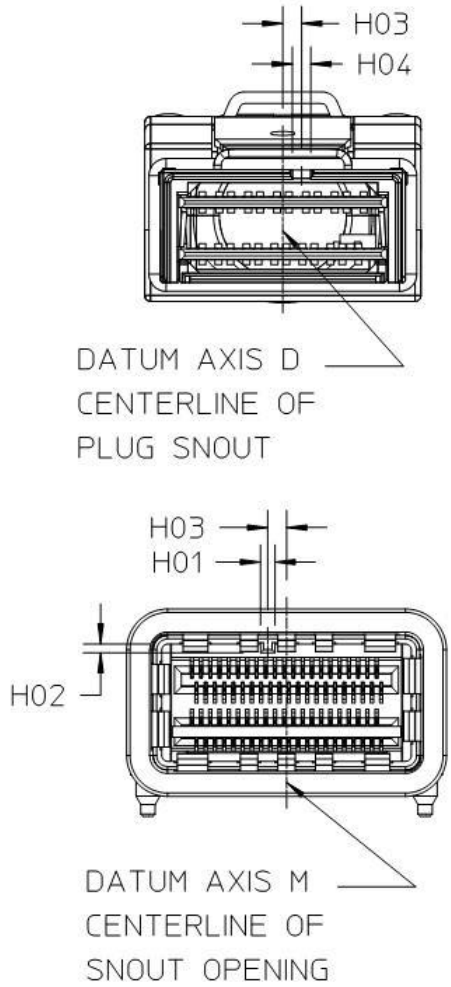

FIGURE 6.9 Orientation Key

TABLE 6.9 Key/Keyway Dimensions

Designator	Description	Dimension	Tolerance
H01	Orientation Key Width	1.25	0.13
H02	Orientation Key Height	0.75	0.13
H03	Orientation Key Location	1.625	0.13
H04	Orientation Key Slot	1.60	0.13

6.10 Thermal Solution

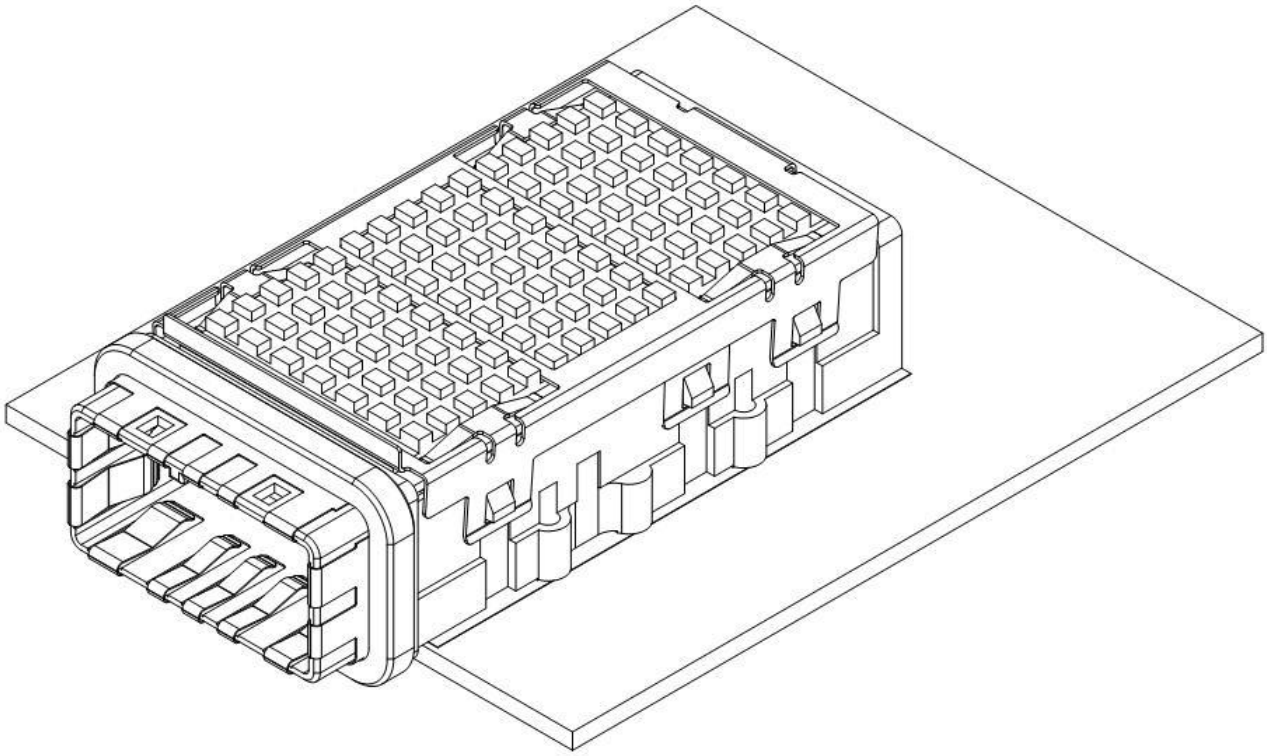

FIGURE 6.10 Integrated Receptacle Connector with Spring-loaded Heat sink & Clip

6.11 Thermal Interface Definition on Plug

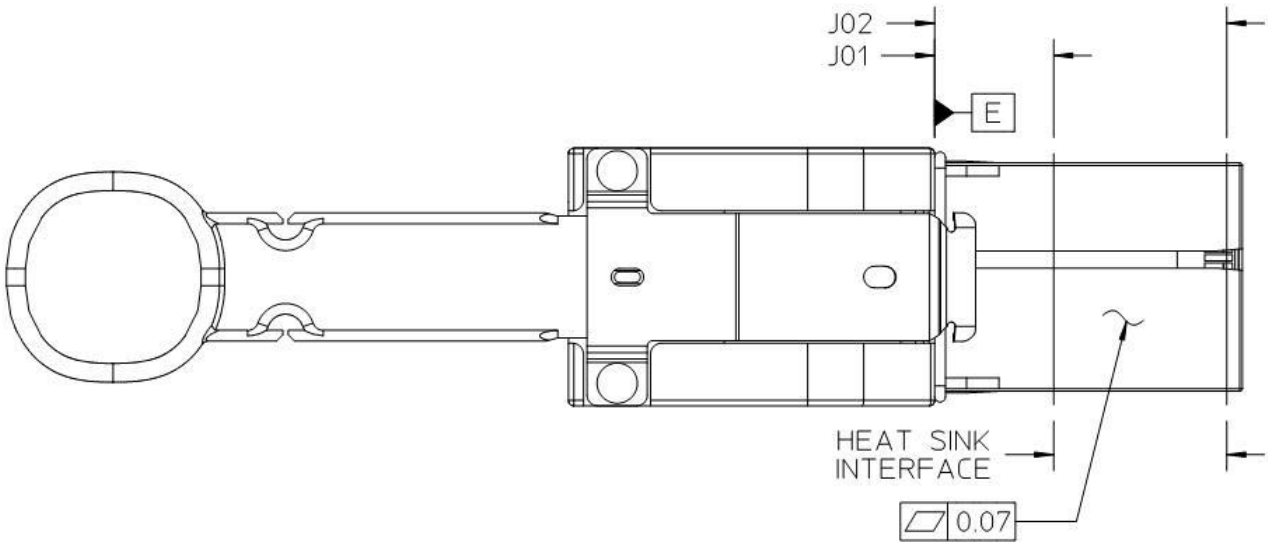

FIGURE 6.11 Thermal Interface Definition for Integrated Plug Connector

TABLE 6.11 Thermal Interface Dimensions for Integrated Plug Connector

Designator	Description	Dimension	Tolerance
J01	Plug Body to Heat Sink Interface Start	11.00	Max
J02	Plug Body to Heat Sink Interface End	27.00	Min

6.12 Heat Sink Configuration

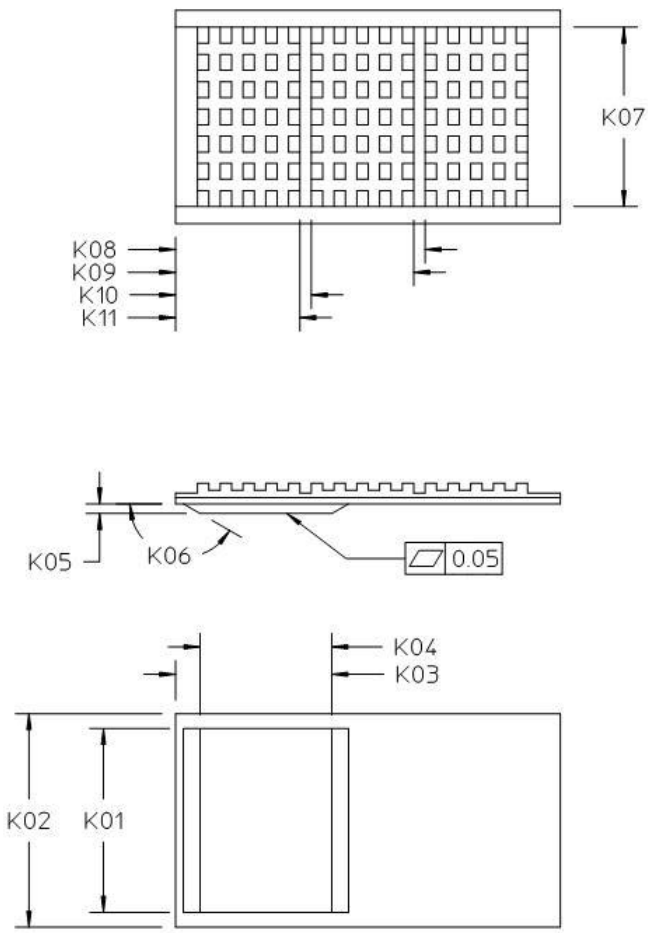

FIGURE 6.12 Heat Sink Thermal Interface Profile for Integrated Receptacle

TABLE 6.12 Heat Sink Thermal Interface Dimensions

Designator	Description	Dimension	Tolerance
K01	Heat Sink Pad Width	20.25	0.10
K02	Heat Sink Width	23.50	0.10
K03	Heat Sink Pad Back Edge	17.93	0.10
K04	Heat Sink Pad Length	14.46	0.10
K05	Heat Sink Pad Height	1.05	0.10
K06	Heat Sink Lead-In Angle	150.00	5.00
K07	Heat Sink Tower Width	19.75	0.10
K08	Heat Sink Clip Interface Zone	27.40	0.10
K09	Heat Sink Clip Interface Zone	26.15	0.10
K10	Heat Sink Clip Interface Zone	14.90	0.10
K11	Heat Sink Clip Interface Zone	13.65	0.10

6.13 Heat Sink Clip

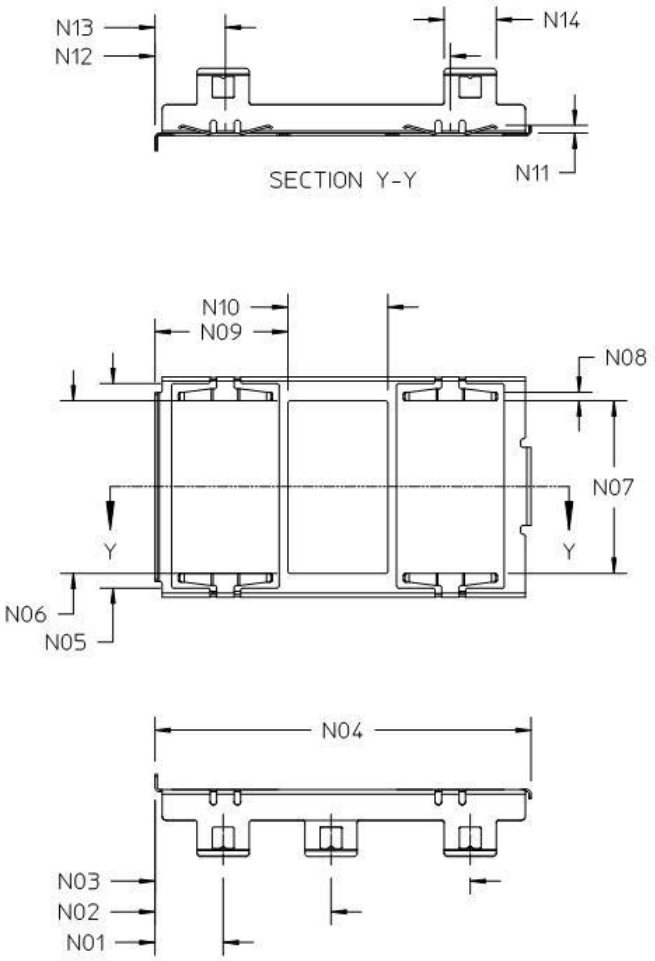

FIGURE 6.13 Heat Sink Clip Dimensions

TABLE 6.13 Heat Sink Clip Dimensions

Designator	Description	Dimension	Tolerance
N01	Heat Sink Clip Flange to Attach Point	7.84	0.10
N02	Heat Sink Clip Flange to Attach Point	20.25	0.10
N03	Heat Sink Clip Flange to Attach Point	36.25	0.10
N04	Heat Sink Clip Length	43.25	0.10
N05	Heat Sink Clip Cut Out Width	23.60	0.10
N06	Heat Sink Clip Cut Out Width	19.90	0.10
N07	Heat Sink Clip Finger to Finger	19.90	0.10
N08	Heat Sink Clip Finger Width	1.00	Ref
N09	Heat Sink Clip Cut Out Length	15.28	0.10
N10	Heat Sink Clip Cut Out Length	11.50	0.10
N11	Heat Sink Clip Finger Height	0.91	Ref
N12	Heat Sink Clip Finger Location	33.97	Ref
N13	Heat Sink Clip Finger Location	8.09	Ref
N14	Heat Sink Clip Attach Point Width	6.25	Max

6.14 Heat Sink Attach Points on Integrated Receptacle

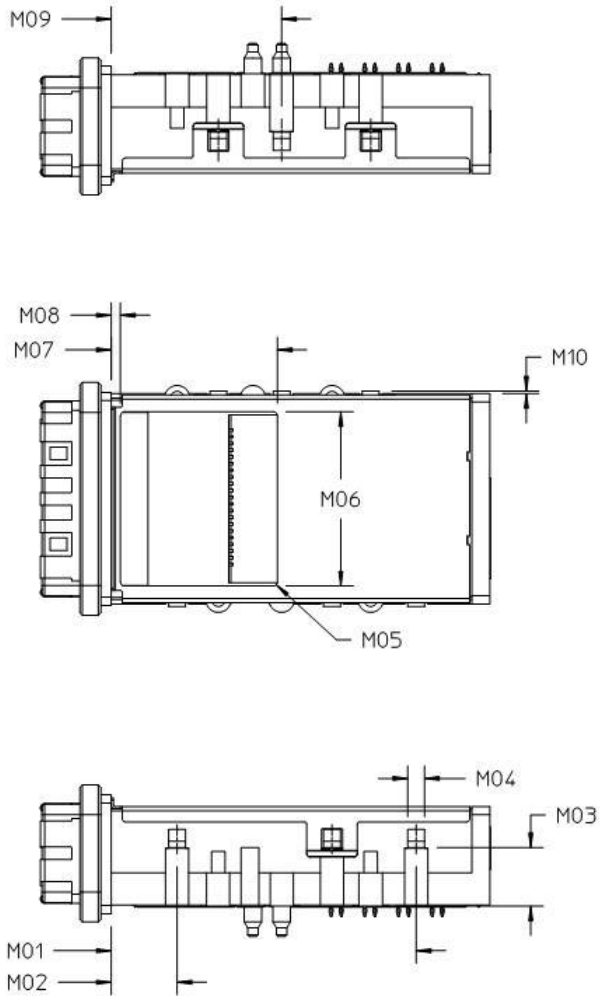

FIGURE 6.14 Heat Sink Clip Attach Points

TABLE 6.14 Heat Sink Attach Point Dimensions

Designator	Description	Dimension	Tolerance
M01	Flange to Heat Sink Attach Point	36.25	0.10
M02	Flange to Heat Sink Attach Point	7.84	0.10
M03	Heat Sink Attach Point Height	6.96	0.10
M04	Heat Sink Attach Point Width	2.00	0.10
M05	Heat Sink Cover Opening Radius	0.50	0.10
M06	Heat Sink Cover Opening Width	20.75	0.10
M07	Flange to Heat Sink Cover Opening	18.65	0.10
M08	Heat Sink Cover Opening Length	1.10	0.10
M09	Flange to Heat Sink Attach Point	20.25	0.10
M10	Height of Heat Sink Attach Feature	0.30	Min

6.15 Dust Cover for Integrated Receptacle Ports

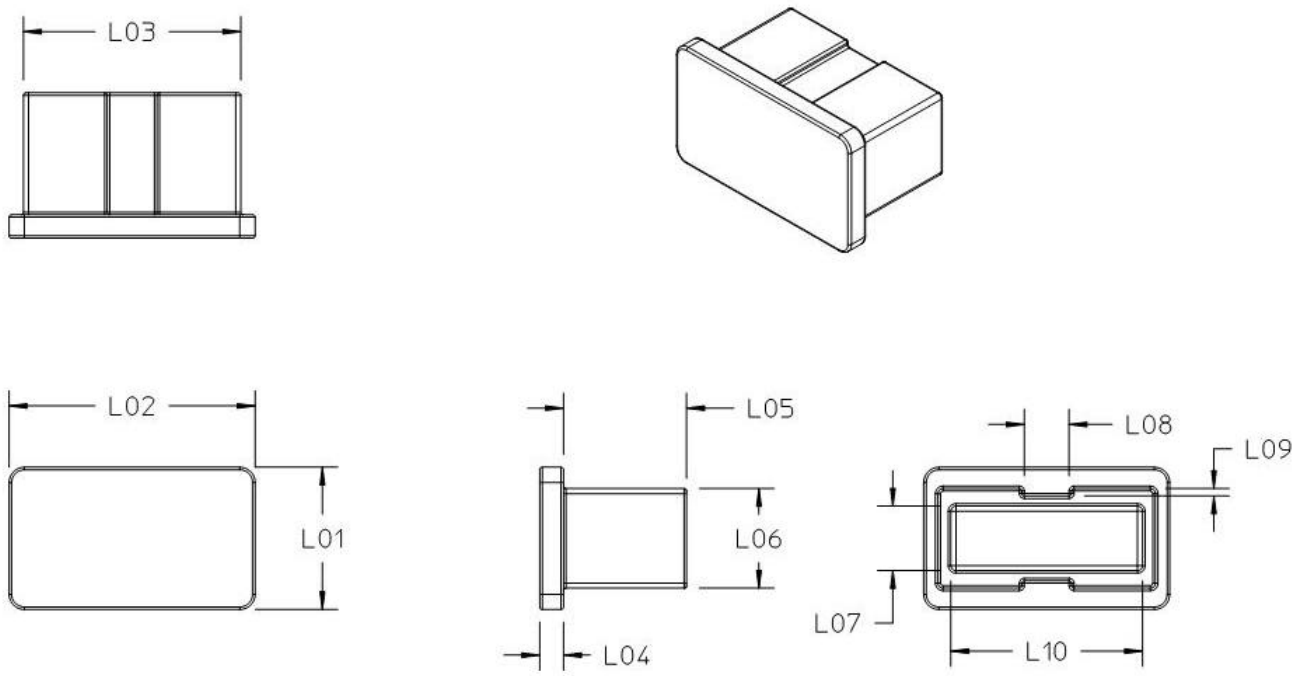

FIGURE 6.15 Dust Cover Dimensions

TABLE 6.15 Dust Cover Dimensions

Designator	Description	Dimension	Tolerance
L01	Front Height	14.00	Max
L02	Front Width	24.00	Max
L03	Body Width	21.20	0.10
L04	Front Thickness	2.00	Min
L05	Body Length	12.00	Max
L06	Body Height	9.81	0.10
L07	Body Inner Height	6.35	0.10
L08	Groove Width	4.35	0.10
L09	Groove Depth	0.73	Ref
L10	Body Inner Width	18.70	0.10

7. Performance Requirements

7.1 Electrical

Parameter	Test Condition	Specification
Current		0.5 A per contact
Voltage		30 vDC per contact
Temperature		-20°C to +85°C
Humidity		80% Relative Humidity
Low Level Contact Resistance	EIA 364-23 20 mVdc, 10 mA	Baseline
Insulation Resistance	100 Vdc	1000M ohms minimum Between adjacent contacts
Dielectric Withstanding Voltage	300 Vdc minimum for 1 minute	No defect or breakdown between adjacent contacts
Differential Impedance (connector area)	EIA 364-108 Rise time: 50ps (20-80%) Includes connector cable to connector interface and board termination pads and vias.	90-110 ohms (distribution) 100±5 ohms (distribution of average value)
Within Pair Skew	EIA 364-103	5 ps maximum (By design)
Near End Isolation	EIA 364-90 50 MHz to 6 GHz	-40 dB minimum (Frequencies up to 5 GHz)
Insertion Loss	EIA 364-101 50 MHz to 6 GHz	1.0 dB maximum (Frequenzies up to 5 GHz)

7.2 Mechanical

Parameter	Test Condition	Specification
Durability	EIA 364-23	250 cycles
Mating Force	EIA 364-13	150N maximum
Unmating Force	EIA 364-13	50N maximum
Vibration	EIA 364-28	No Damage No discontinuity longer than 1µsec allowed. 20 mOhms maximum change from initial (baseline) contact resistance
Mechanical Shock	EIA 364-27	No Damage 20 mOhms maximum change from initial (baseline) contact resistance

7.3 Environmental

Parameter	Test Condition	Specification
Durability	EIA 364-23	250 cycles
Thermal Shock	EIA 364-32C, Condition 1 -55°C to +85°C	No Damage 20 mOhms maximum change from initial (baseline) contact resistance
Temperature Life	EIA 364-17, Method A Test Condition 2, Test Time Condition C Subject mated specimens to 70°C for 500 hours	No Damage 20 mOhms maximum change from initial (baseline) contact resistance
Humidity-Temperature Cycling	EIA 364-31, Method III Subject unmated specimens to 10 cycles (10 days) between 25°C and 65° at 80-100% RH	No Damage 20 mOhms maximum change from initial (baseline) contact resistance
Mixed Flowing Gas	EIA 364-65, Class 2A Subject specimens to environments Class 2A, 7 days unmated and 7 days mated	No Damage 20 mOhms maximum change from initial (baseline) contact resistance
Thermal Disturbance	EIA 364-32 Cycle the connector between 15±3°C and 85±3°C as measured on part. Temperature ramps should be a minimum of 2°C per minute and dewll times should insure that the contacts reach the temperture extremes (a minimum of 5 minutes). Humidity is not controlled. Perform 10 such cycles.	No Damage 20 mOhms maximum change from initial (baseline) contact resistance