SFF-8432

Specification for

SFP+ Module and Cage

Rev 5.2a November 30, 2018

SECRETARIAT: SFF TA TWG
This specification is made available for public review at http://www.snia.org/sff/specifications. Comments may be submitted at http://www.snia.org/feedback. Comments received will be considered for inclusion in future revisions of this specification.

The description of the connector in this specification does not assure that the specific component is available from connector suppliers. If such a connector is supplied, it should comply with this specification to achieve interoperability between suppliers.

ABSTRACT: This specification defines the mechanical specifications for the SFP+ Module and Cage aka Improved Pluggable Formfactor (IPF).

The mechanical dimensioning allows backwards compatibility between IPF modules plugged into most SFP cages which have been implemented to SFF-8074i. It is anticipated that when the application requires it, manufacturers will be able to supply cages that accept SFP style modules. In both cases the EMI leakage is expected to be similar to that when SFP modules and cages are mated.

Superior EMI performance can only be expected with mated combinations of IPF modules and cages.

POINTS OF CONTACT:
Michael D. Long
Amphenol Canada Corp
1408 Woodhaven Drive
Hummelstown, PA 17036
Ph: 717-566-1655
Email: michaello@amphenolcanada.com

Chairman SFF TA TWG
Email: SFF-Chair@snia.org

Copyright © 2018 SNIA. All rights reserved.

Amphenol Exhibit 1027
Amphenol v. Credo

Intellectual Property

The user's attention is called to the possibility that implementation of this specification may require the use of an invention covered by patent rights. By distribution of this specification, no position is taken with respect to the validity of a claim or claims or of any patent rights in connection therewith.
This specification is considered SNIA Architecture and is covered by the SNIA IP Policy and as a result goes through a request for disclosure when it is published. Additional information can be found at the following locations:

- Results of IP Disclosures: http://www.snia.org/sffdisclosures
- SNIA IP Policy: http://www.snia.org/ippolicy

Copyright

The SNIA hereby grants permission for individuals to use this document for personal use only, and for corporations and other business entities to use this document for internal use only (including internal copying, distribution, and display) provided that:

1. Any text, diagram, chart, table or definition reproduced shall be reproduced in its entirety with no alteration, and,
2. Any document, printed or electronic, in which material from this document (or any portion hereof) is reproduced shall acknowledge the SNIA copyright on that material, and shall credit the SNIA for granting permission for its reuse.

Other than as explicitly provided above, there may be no commercial use of this document, or sale of any part, or this entire document, or distribution of this document to third parties. All rights not explicitly granted are expressly reserved to SNIA.

Permission to use this document for purposes other than those enumerated (Exception) above may be requested by e-mailing copyright_request@snia.org. Please include the identity of the requesting individual and/or company and a brief description of the purpose, nature, and scope of the requested use. Permission for the Exception shall not be unreasonably withheld. It can be assumed permission is granted if the Exception request is not acknowledged within ten (10) business days of SNIA's receipt. Any denial of permission for the Exception shall include an explanation of such refusal.

Disclaimer

The information contained in this publication is subject to change without notice. The SNIA makes no warranty of any kind with regard to this specification, including, but not limited to, the implied warranties of merchantability and fitness for a particular purpose. The SNIA shall not be liable for errors contained herein or for incidental or consequential damages in connection with the furnishing, performance, or use of this specification.

Suggestions for revisions should be directed to http://www.snia.org/feedback/.

Copyright © 2018 SNIA. All rights reserved.

Foreword

The development work on this specification was done by the SNIA SFF TWG, an industry group. Since its formation as the SFF Committee in August 1990, the membership has included a mix of companies which are leaders across the industry.

For those who wish to participate in the activities of the SFF TWG, the signup for membership can be found at http://www.snia.org/sff/join.

Revision History

Rev 5.1

- Corrected T Ref and AJ dimensions in Figure 4-1 to S Ref and AK
- Corrected '…(Dimension V)' to "… Dimension U" in Figure 4-2

Rev 5.2 *November 30, 2018:*

- Upgraded to new SFF TA TWG template
- Corrected capitalization errors in Table 4-3
- Corrected references to Figure 5-1 in Notes 7 and 15 in Table 4-3
- Minor editorial edits throughout document

Rev 5.2a *November 30, 2018:*

- Corrected metadata

Copyright © 2018 SNIA. All rights reserved.

Contents

1. Scope 5

2. References and Conventions 5
   2.1 Industry Documents 5
   2.2 Sources 5
   2.3 Conventions 6
   2.4 Definitions 6

3. General Description 7

4. IPF Module 8
   4.1 Module Retention and Extraction 11
   4.2 Insertion, Extraction, and Retention Forces for IPF Module 13
   4.3 IPF Durability 13
   4.4 IPF Module Dimensions 13

5. IPF Cage Requirements 17

6. Examples of IPF Transceiver Cage Configurations 18

Figures

Figure 3-1 Typical Modules 7
Figure 4-1 IPF Module 8
Figure 4-2 Latch Post Detail 9
Figure 4-3 Module Electrical Interface 10
Figure 4-4 Retention Technique #1 11
Figure 4-5 Retention Technique #2 11
Figure 4-6 Retention Technique #3 12
Figure 4-7 Retention Technique #4 12
Figure 5-1 Cage Requirements 17
Figure 6-1 Single Port Cage Example 18
Figure 6-2 (2) Port Cage Example 18

Tables

Table 4-1 Insertion, Extraction, and Retention Forces 13
Table 4-2 Durability 13
Table 4-3 Dimension Table for IPF Module 13

Copyright © 2018 SNIA. All rights reserved.

1. Scope

This specification defines the terminology and mechanical requirements for a pluggable transceiver module. This specification also includes critical dimensions of the IPF cage. This specification is also intended to facilitate the implementation of 1 x "n" ganged and the 2 x "n" stacked cage configurations.

The need for this specification became evident when it was realized that some SFP modules and cage designs do not perform adequately in terms of EMI leakage, and cannot meet the needs for higher data rates. The IPF is an improved transceiver style which has tighter mechanical tolerances on the module and enhanced EMI characteristics when mated with a cage designed for the IPF module. Please note that there are additional cage requirements specified in this document to allow proper function of the IPF modules in application. These improvements make the IPF suitable for current SFP applications as well as those at higher transfer rates.

2. References and Conventions

2.1 Industry Documents

The following documents are relevant to this specification.

- ASME Y14.5 Dimensioning and Tolerancing
- EIA-364-1000 Environmental Test Methodology for Assessing the Performance of Electrical Connectors and Sockets Used in Controlled Environment Applications
- INF-8074i 1.0 SFP (Small Formfactor Pluggable) Transceiver
- REF-TA-1011 Cross Reference to Select SFF Connectors
- SFF-8083 0.8mm SFP+ Complaint Card Edge Connector
- SFF-8431 SFP+

2.2 Sources

The complete list of SFF documents which have been published, are currently being worked on, or that have been expired by the SFF Committee can be found at http://www.snia.org/sff/specifications. Suggestions for improvement of this specification will be welcome, they should be submitted to http://www.snia.org/feedback.

Copies of SAS (SCSI), T11 (FibreChannel), and T13 (ATA) standards may be obtained from the International Committee for Information Technology Standards (INCITS) (http://www.incits.org).

Copies of ASME standards may be obtained from the American Society of Mechanical Engineers (https://www.asme.org).

Copies of Electronic Industries Alliance (EIA) standards may be obtained from the Electronic Components Industry Association (ECIA) (https://www.ecianow.org).

Copyright © 2018 SNIA. All rights reserved.

2.3 Conventions

The following conventions are used throughout this document:

DEFINITIONS
Certain words and terms used in this standard have a specific meaning beyond the normal English meaning. These words and terms are defined either in the definitions or in the text where they first appear.

ORDER OF PRECEDENCE
If a conflict arises between text, tables, or figures, the order of precedence to resolve the conflicts is text; then tables; and finally figures. Not all tables or figures are fully described in the text. Tables show data format and values.

DIMENSIONING CONVENTIONS
The dimensioning conventions are described in ASME-Y14.5, Geometric Dimensioning and Tolerancing. All dimensions are in millimeters, which are the controlling dimensional units (if inches are supplied, they are for guidance only).

NUMBERING CONVENTIONS
The ISO convention of numbering is used (i.e., the thousands and higher multiples are separated by a space and a period is used as the decimal point). This is equivalent to the English/American convention of a comma and a period.

American	French	ISO
0.6	0,6	0.6
1,000	1 000	1 000
1,323,462.9	1 323 462,9	1 323 462.9

2.4 Definitions

For the purposes of this document, the following definitions apply.

Optional: This term describes features which are not required by the SFF Specification. However, if any feature defined by the SFF Specification is implemented, it shall be done in the same way as defined by the Specification. Describing a feature as optional in the text is done to assist the reader. If there is a conflict between text and tables on a feature described as optional, the table shall be accepted as being correct.

Reserved: Where this term is used for defining the signal on a connector pin its actual function is set aside for future standardization. It is not available for vendor specific use. Where this term is used for bits, bytes, fields and code values; the bits, bytes, fields and code values are set aside for future standardization. The default value shall be zero. The originator is required to define a reserved field or bit as zero, but the receiver should not check Reserved fields or bits for zero.

Dimension, Reference: A dimension used for information purposes only. A reference dimension is a repeat of a dimension or is derived from other values shown on the drawing or on related drawings. It is considered auxiliary information and does not govern production or inspection operations.

Copyright © 2018 SNIA. All rights reserved.

3. General Description

This specification defines the complete mechanical dimensions of the IPF transceiver module. The IPF module and cage system provide a superior alternative, in terms of interoperability and EMI control, to the SFP system.

The dimensions for the module are normative.

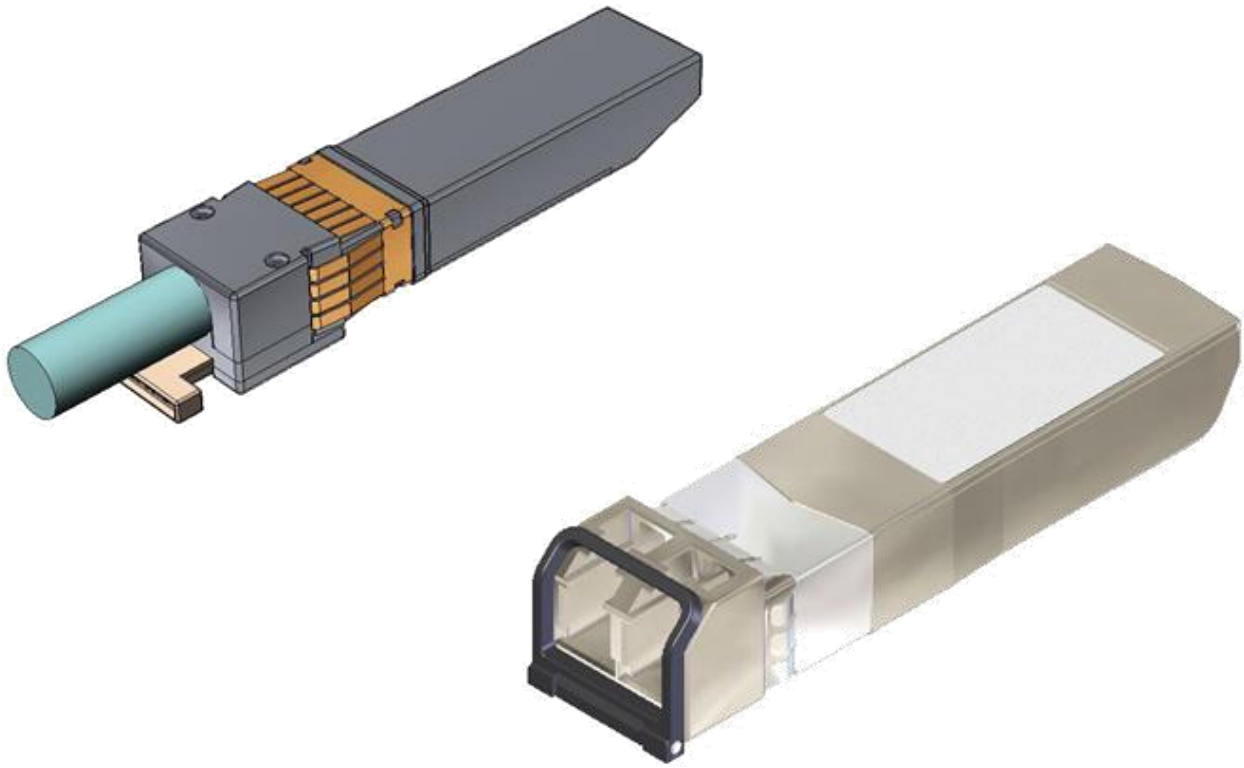

Figure 3-1 Typical Modules

Copyright © 2018 SNIA. All rights reserved.

4. IPF Module

The IPF module is described in Figure 4-1, Figure 4-2, and Figure 4-3.

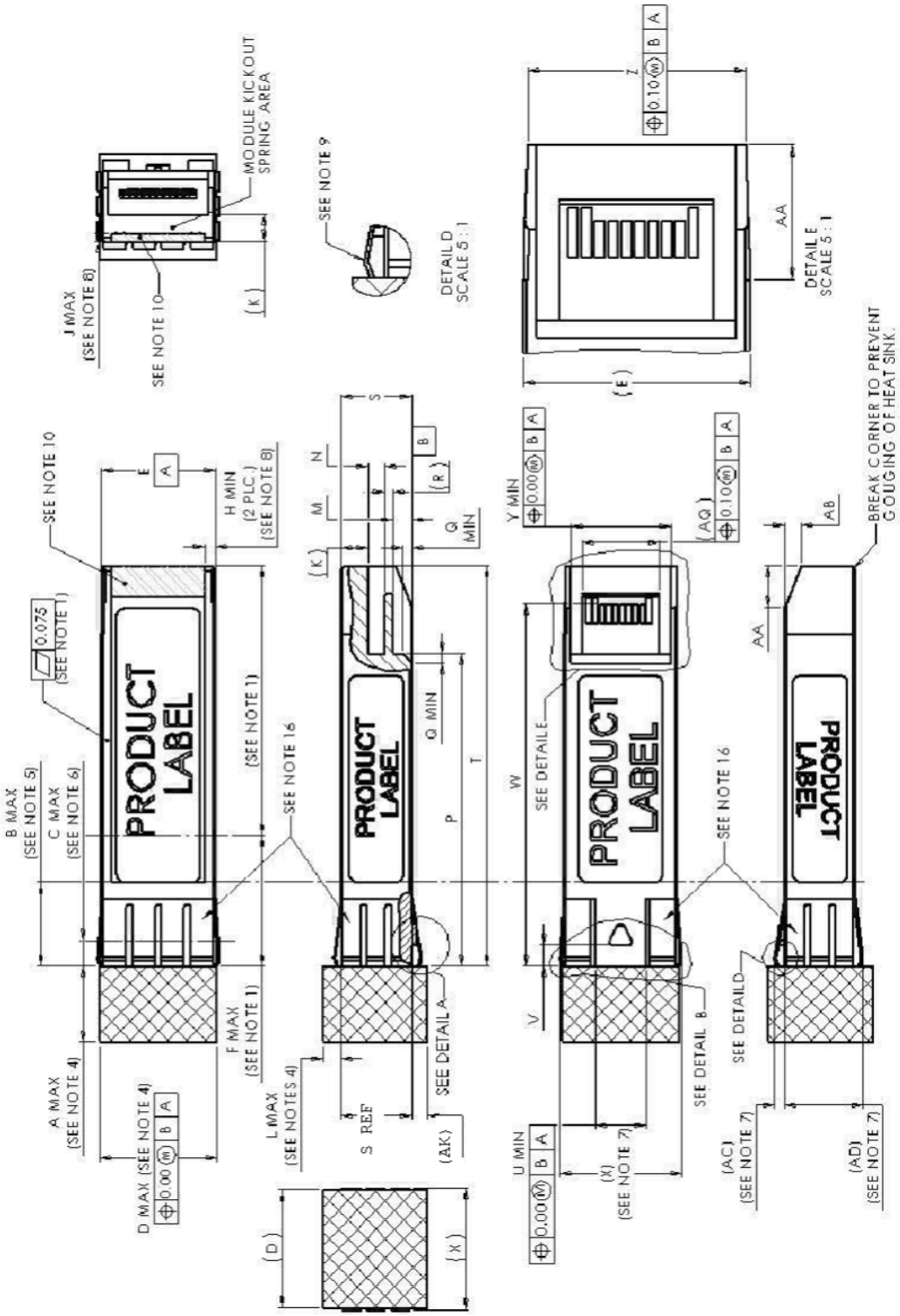

Figure 4-1 IPF Module

Copyright © 2018 SNIA. All rights reserved.

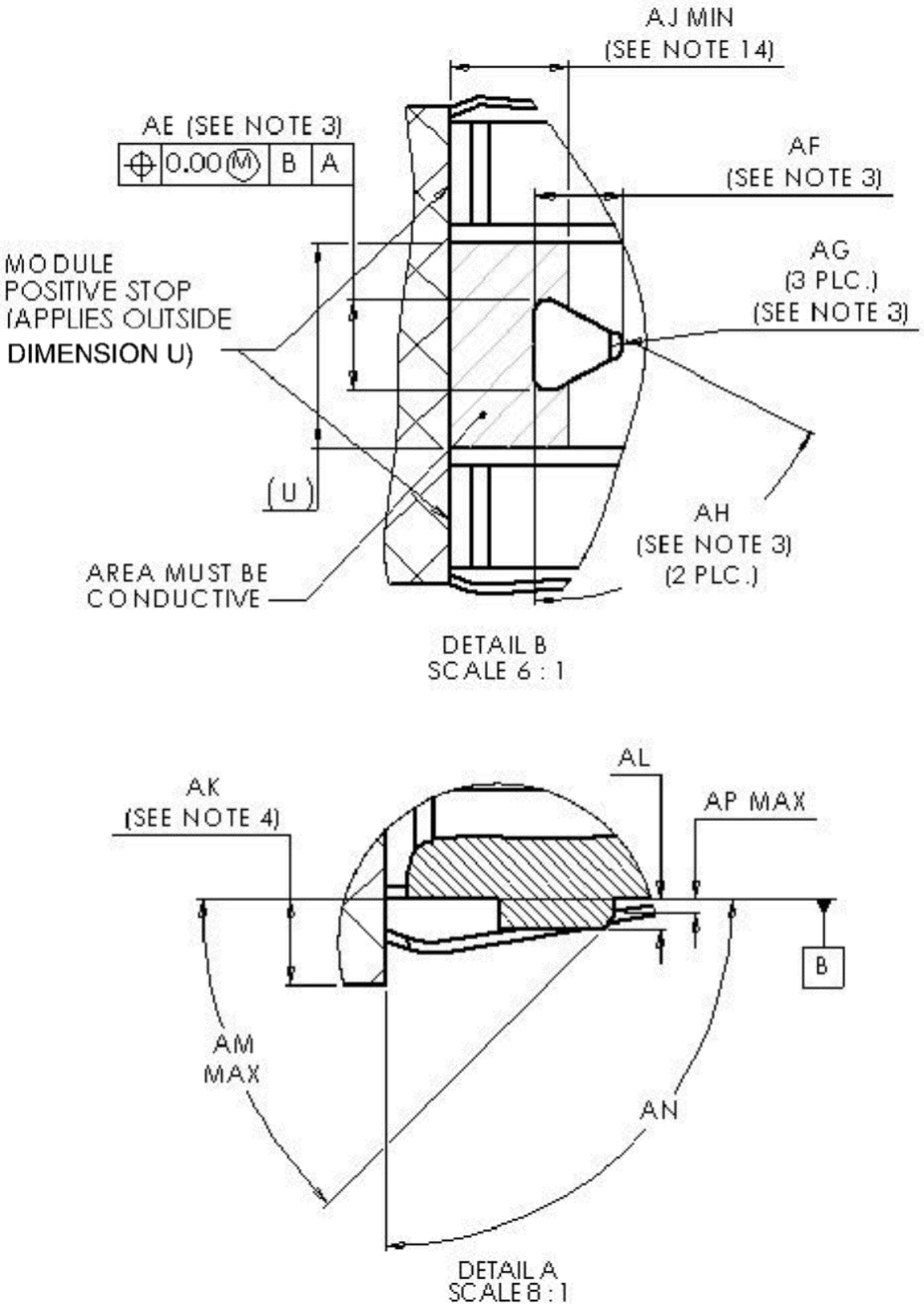

Figure 4-2 Latch Post Detail

Copyright © 2018 SNIA. All rights reserved.

The IPF module contains a printed circuit board that mates with an appropriately designed connector. The pads are designed for sequence mating:

- First mate – ground contacts
- Second mate – power contacts
- Third mate – signal contacts

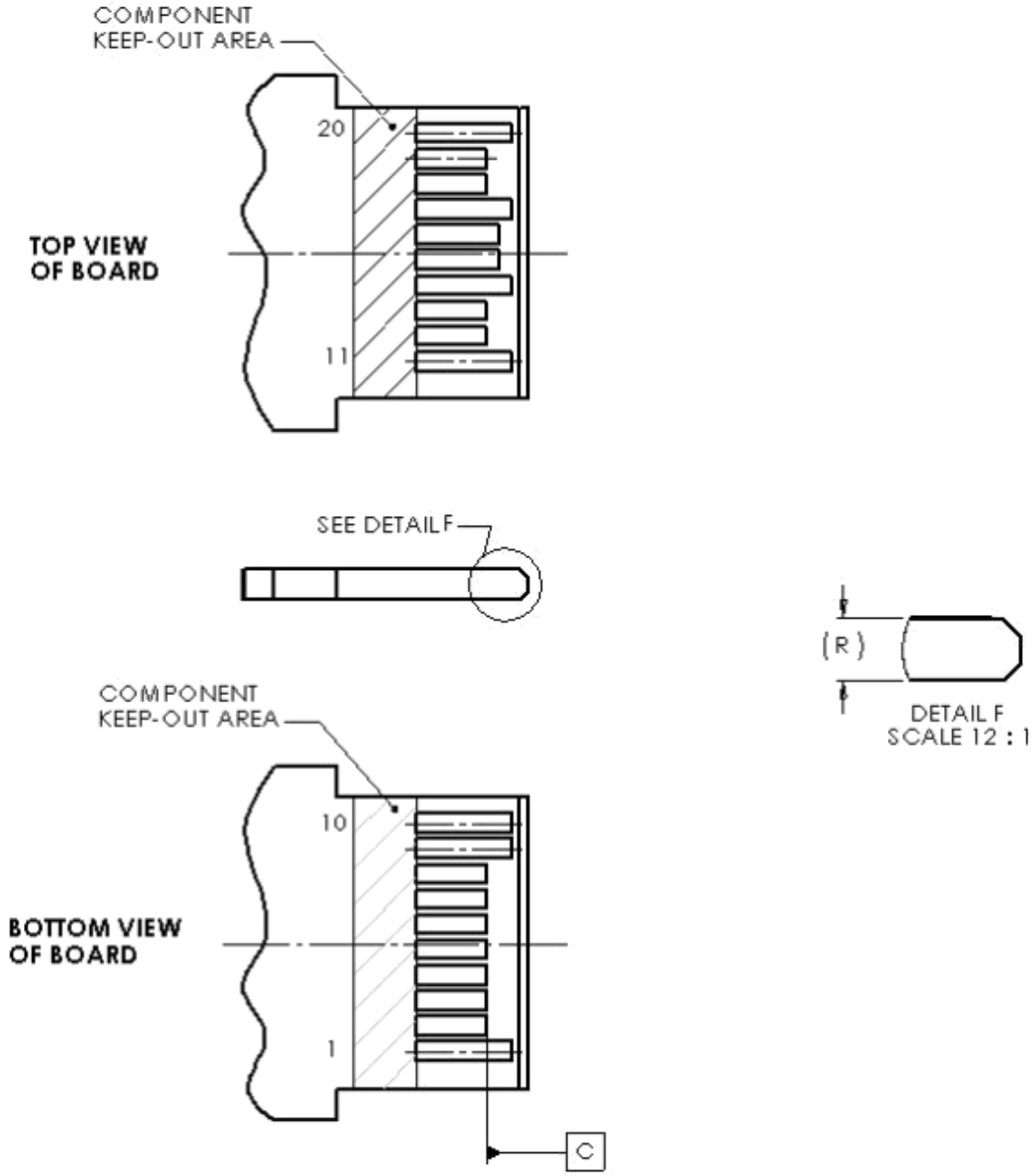

Note: View is shown for reference only. See SFF-8083 for dimensional values. See INF-8074i, Figure 3, for example of Electrical Pad Layout.

Figure 4-3 Module Electrical Interface

Copyright © 2018 SNIA. All rights reserved.

4.1 Module Retention and Extraction

The IPF contains multiple features to be used for retention inside a corresponding cage. A forward stop is defined by the feature envelope extending outside the cage. The other retention feature is defined by the leading edge of the retention posts. The interaction of these two features is meant to retain the module inside a properly defined cage. The extraction of the module from the cage shall be accomplished by using one of the four techniques defined below or a functional equivalent thereof. The corresponding cage retention device shall release the module from the cage when any of the four techniques shown here are applied.

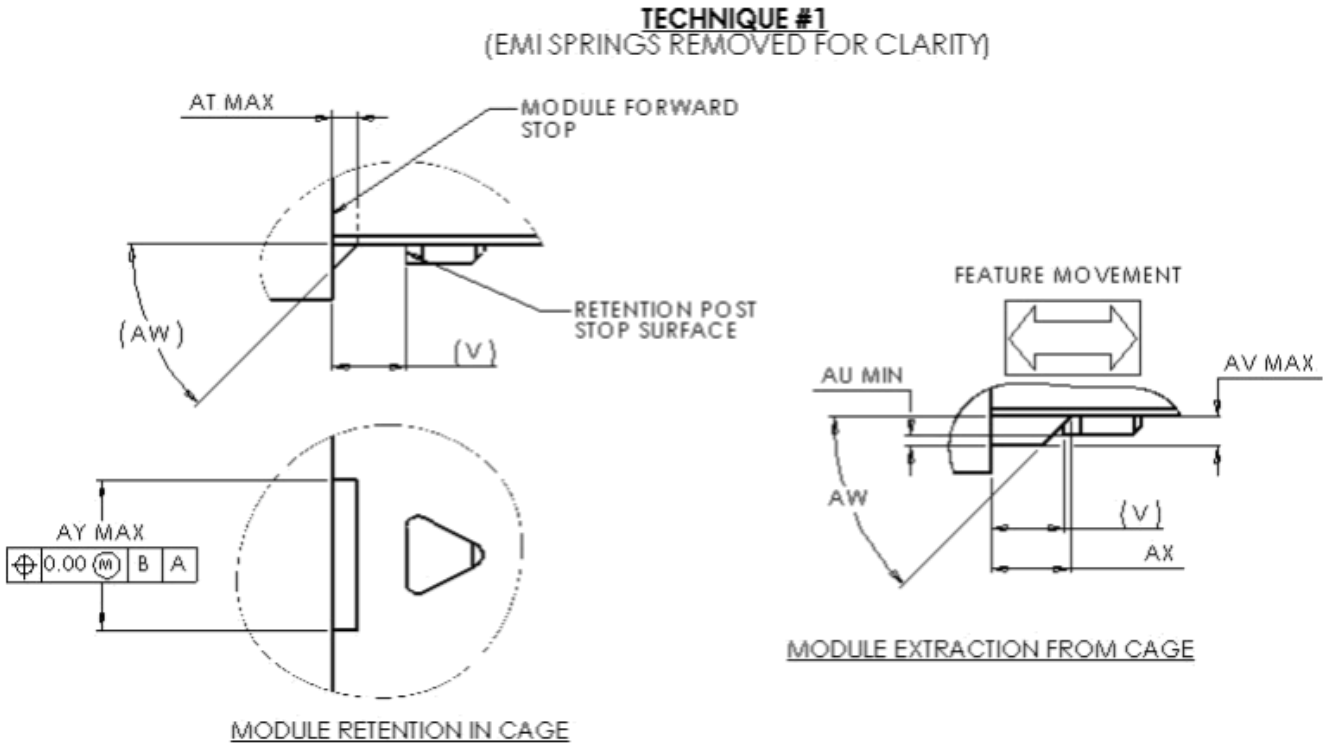

Figure 4-4 Retention Technique #1

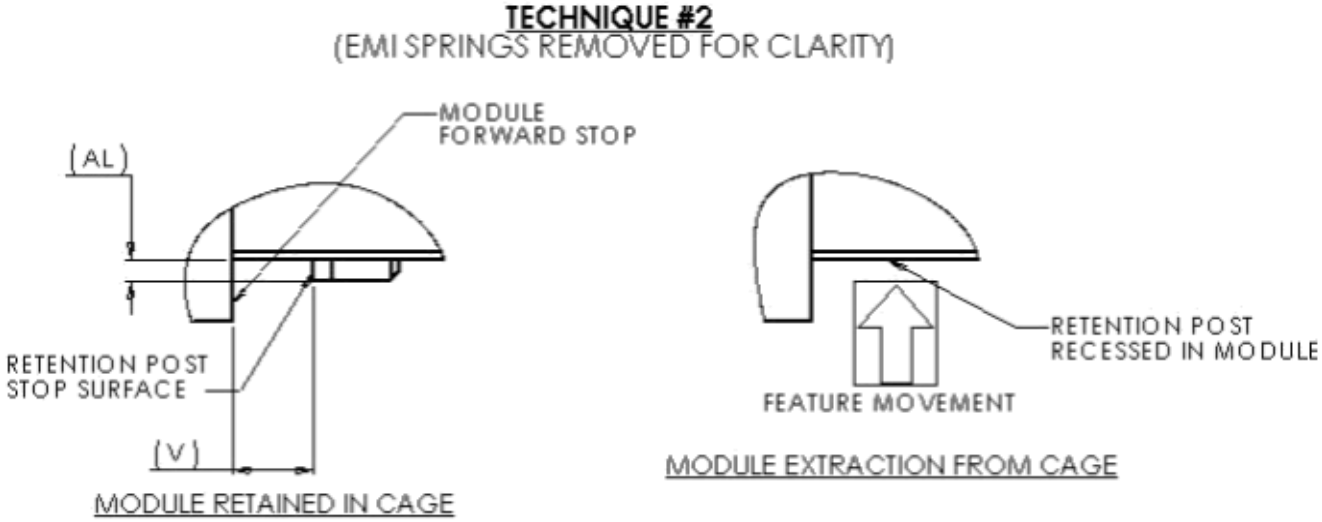

Figure 4-5 Retention Technique #2

Copyright © 2018 SNIA. All rights reserved.

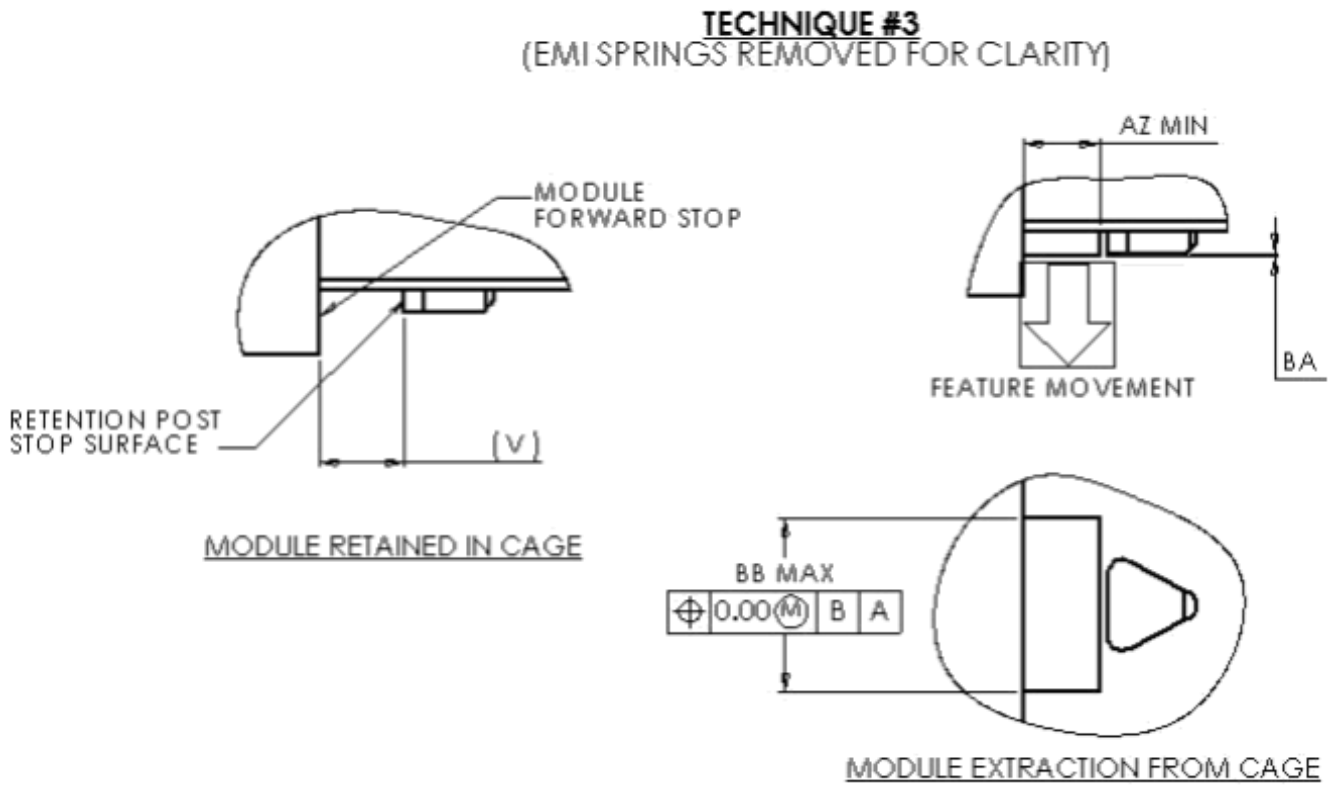

Figure 4-6 Retention Technique #3

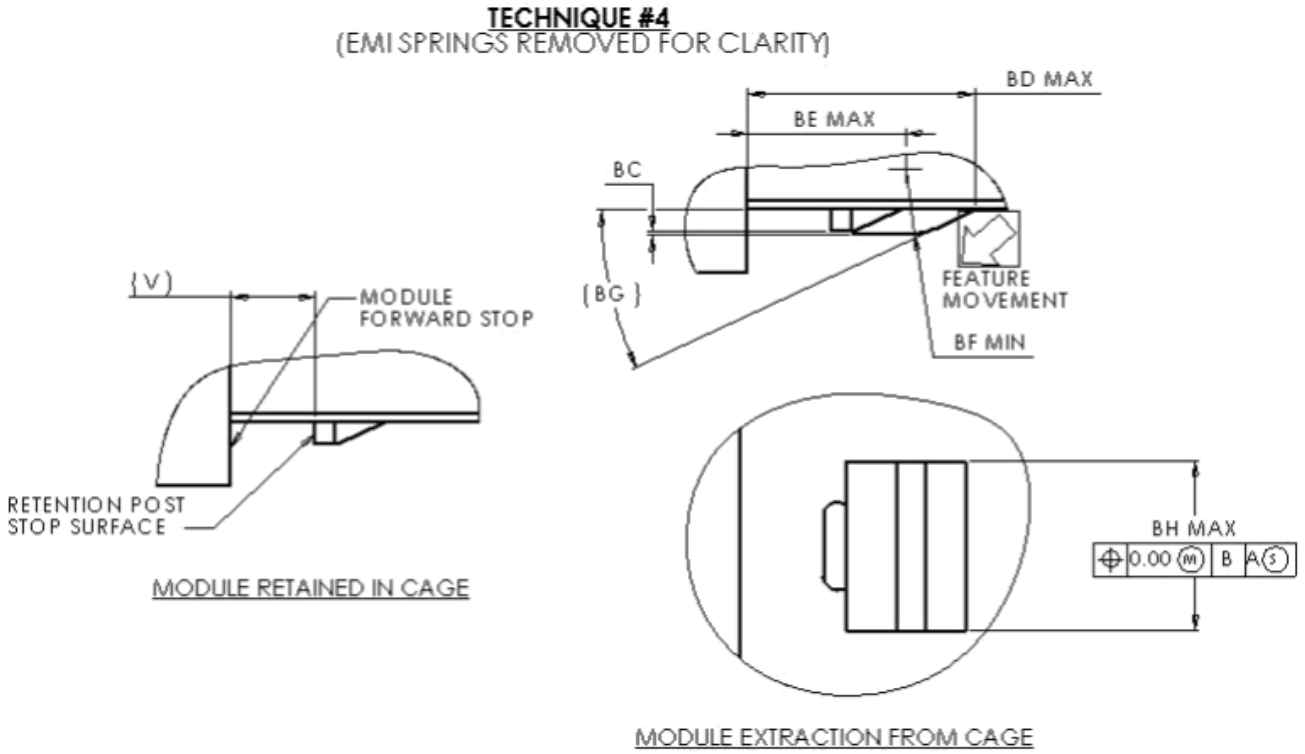

Figure 4-7 Retention Technique #4

Copyright © 2018 SNIA. All rights reserved.

4.2 Insertion, Extraction, and Retention Forces for IPF Module

Table 4-1 Insertion, Extraction, and Retention Forces

Measurement	Minimum	Maximum	Units	Comments
IPF Module Insertion	0	18	Newtons	Measure without the force from any cage kick-out springs. Module to be inserted into nominal cage.
IPF Module Extraction	0	12.5	Newtons	Measure without the aid of any cage kick-out springs. Module to be inserted into nominal cage.
IPF Module Retention in Cage	90	170	Newtons	No function damage to module below 90 N.

4.3 IPF Durability

Table 4-2 Durability

Measurement	Minimum	Units	Comments
Insertion/ removal cycles into cage/ connector	50	Module cycles	No functional damage to module, cage or connector.
	100	Cage/ connector cycles	

4.4 IPF Module Dimensions

All of the dimensions for the IPF module and minimum requirements for a IPF style cage are listed in Table 4-3.

Table 4-3 Dimension Table for IPF Module

Designator	Dimension (mm)	Tolerance (mm)	Comments
A	10.00	Recommended Maximum	Module length extending outside of cage, see Note 4. Other lengths are application specific.
B	10.00	Maximum	Designated EMI ground spring area, see Note 5
C	3.00	Maximum	EMI spring/cage contact point, see Note 6
D	14.00	Maximum	Module width extending outside of cage, see Note 4
E	13.55	±0.25	Module width
F	15.50	Maximum	Distance to front end of optional heat sink area, see Note 1
H	1.25	Minimum	Top slot distance from edge, see note 8
J	1.00	Maximum	Top slot depth, see note 8
K	3.25	Reference	Height of module kick-out spring area
L	2.10	Maximum	Module top height extending outside of cage, see Note 4
M	2.25	±0.10	Distance from bottom of module to printed circuit board
N	2.00	±0.25	Distance from rear shoulder to printed circuit board
P	37.10	±0.30	Distance from positive stop to bottom opening of module and beginning of bottom rear relief
Q	1.10	Minimum	Chamfer on bottom of module opening

Copyright © 2018 SNIA. All rights reserved.

Table 4-3 Dimension Table for IPF Module (Continued)

Designator	Dimension (mm)	Tolerance (mm)	Comments
R		Reference	Thickness of printed circuit board from pad to pad (See SFF-8083 for dimensional value)
S	8.55	±0.15	Module height
T	47.50	±0.20	Distance from positive stop to rear of module
U	6.00	Minimum	Clearance area for cage tab
V	2.50	+0.15/-0.05	Distance from retention post to positive stop
W	43.00	±0.20	Distance from positive stop to end of PCB signal pad
X	14.55	Reference	Overall width of EMI springs, see note 7
Y	11.90	Minimum	Module width of bottom opening
Z	13.40	+0.10/-0.5	Taper module width at PCB end
AA	6.00	±4.0	Length of taper and relief at rear of module
AB	1.00	+1.0/-0.75	Height of bottom rear relief
AC	1.20	Reference	Height of bottom EMI springs, see note 7
AD	9.35	Reference	Height of top EMI springs, see note 7
AE	2.65	N/A	Width of retention post, see Note 3
AF	2.60	N/A	Length of retention post, see Note 3
AG	0.40	N/A	Retention post radius, see Note 3
AH	62.8°	N/A	Retention post angle, see Note 3
AJ	3.50	Minimum	Module/cage tab EMI contact zone, see Note 14
AK	1.40	±0.50	Module bottom height extending outside of cage (height of bottom positive stop), see Note 4
AL	0.65	+0.10/-0.25	Retention post height
AM	45°	Maximum	Retention post lead-in angle
AN	90°	±5°	Positive stop angle
AP	0.30	Maximum	Distance from bottom of module to latch angle
AT	0.85	Maximum	Technique #1 ramp distance during retention
AU	0.25	Minimum	Technique #1 ramp height from top of retention post
AV	1.00	Maximum	Technique #1 maximum ramp height
AW	45°	±3°	Technique #1 ramp angle
AX	2.95	±0.25	Technique #1 ramp distance during extraction
AY	5.10	Maximum	Technique #1 ramp width
AZ	2.25	Minimum	Technique #3 pusher length

Copyright © 2018 SNIA. All rights reserved.

Table 4-3 Dimension Table for IPF Module (Continued)

Designator	Dimension (mm)	Tolerance (mm)	Comments
BA	0.10	+0.10/-0.05	Technique #3 pusher height from top of retention post
BB	5.10	Maximum	Technique #3 pusher width
BC	0.10	+0.10/-0.05	Technique #4 pusher height from top of retention post
BD	6.75	Maximum	Technique #4 pusher length from stop
BE	4.70	Maximum	Technique #4 length from stop to pusher radius
BF	2.00	Minimum	Technique #4 pusher radius
BG	25°	Reference	Technique #4 pusher angle
BH	5.10	Maximum	Technique #4 pusher width
BJ	14.00	±0.10	Cage opening width
BK	8.95	±0.15	Cage opening height
BL	0.35	Maximum	Cage opening radius
BM	5.10	Maximum	Cage retention tab width
BN	3.00	Minimum	Cage conductive surface for module EMI spring contact point, see note 11
BP	10.00	Minimum	Smooth cage area to accept module EMI springs, see note 12
Notes: See next page.			

Copyright © 2018 SNIA. All rights reserved.

Table 4-3 Dimension Table for IPF Module (Continued)

Notes: (Continued from previous page)

1. Dimension only applies for modules that require a heat sink. Dimension applies for indicated length for heat sink modules, surface shall be thermally conductive.
2. Labels permitted on top, bottom and both sides within indicated dimensions. Label to be zero thickness or recessed below external surfaces of module. Label contents and positions to be determined by module manufacturer. The label(s) shall not interfere with the mechanical, thermal or EMC properties of the system.
3. Dimensions define a maximum envelope for module post. The post may have a different shape as long as the post cross-section does not exceed the maximum envelope.
4. Indicated outline defines maximum envelope outside of cage. The surfaces of the maximum envelop may be contacted by an adjacent module EMI springs during insertion or extraction of the module from the cage. The surfaces shall not have any shapes or materials that can damage the adjacent module EMI springs or be damaged themselves by the springs.
5. Dimension defines the maximum EMI ground spring position on module.
6. Dimension defines EMI spring contact point with module cage.
7. Maximum aggregated EMI spring force shall not exceed 9 Newtons on any one side. Minimum aggregate EMI spring force shall be greater than 4 Newtons on any side. Maximum force occurs when a module with EMI springs at their maximum dimension is inserted, to the cage stop, into a nominal cage opening. Minimum force occurs when a module with EMI springs at their minimum dimension is inserted into a maximum cage opening (see Figure 5-1).
8. Slot is only required when placing a label on top of the module.
9. Spring ends shall be formed in such a way as to prevent catching on the cage or an adjacent module during insertion or extraction or on any external item during handling. Springs may contact an adjacent module(s) during insertion. However, the springs shall be designed to contact only the cage upon full insertion in cage.
10. The label slot is not required to extend to the end of the module.
11. Designated area on cage shall be conductive and free of holes, dimples, seams or any other feature that may catch on EMI springs.
12. Designated area on cage shall be free of holes, dimples, seams or any other feature that may catch on EMI springs.
13. Color code: An exposed colored feature of the transceiver (a feature or surface extending outside the cage assembly) shall be color coded as follows; Black or beige for multi-mode, Blue for single mode.
14. Dimension defines the minimum size zone for EMI contact between the cage tab and the bottom of the module.
15. Maximum cage tab force may not exceed 7.0 Newtons. Minimum cage tab force shall be greater than 1.5 Newtons. Maximum force occurs when a module at its maximum height dimension (Dim S) is inserted into a nominal cage opening. Minimum force occurs when a module at its minimum dimension (Dim S) is inserted into a maximum cage opening (see Figure 5-1).
16. Number of EMI springs shown is for reference only. Actual number of springs will be determined by manufacturer.

Copyright © 2018 SNIA. All rights reserved.

5. IPF Cage Requirements

In order to take full advantage of the EMI spring definition and improvements, there are three areas of the cage that need to be defined, cage opening, width of cage tab and the area of conductive surface. Al three are shown below, in Figure 5-1.

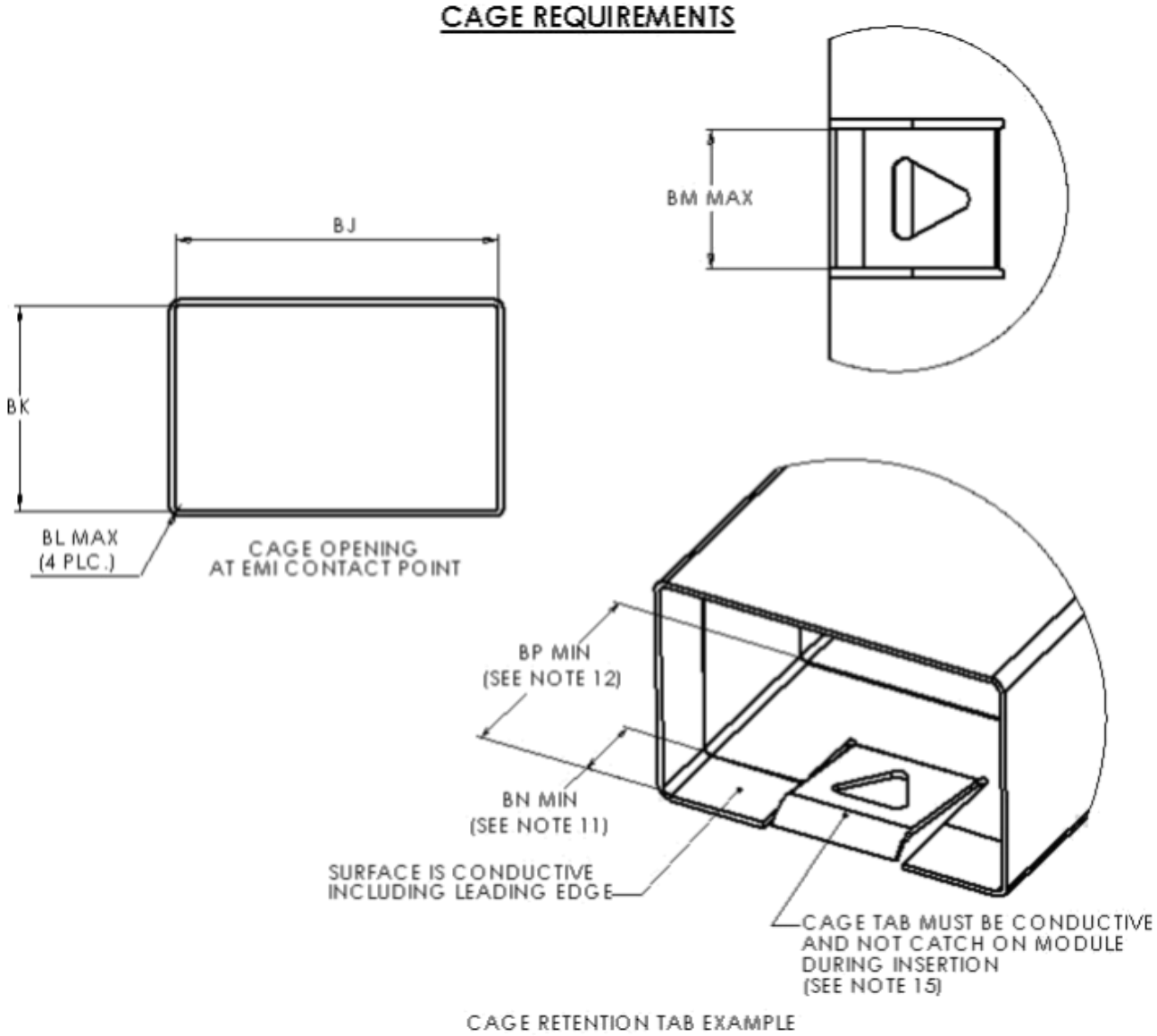

Figure 5-1 Cage Requirements

Copyright © 2018 SNIA. All rights reserved.

6. Examples of IPF Transceiver Cage Configurations

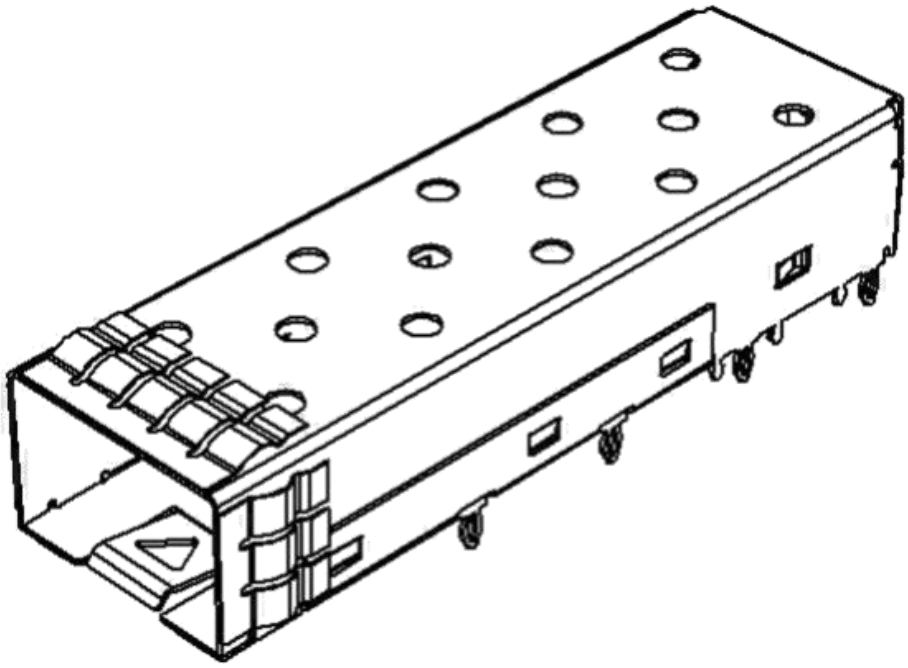

Figure 6-1 Single Port Cage Example

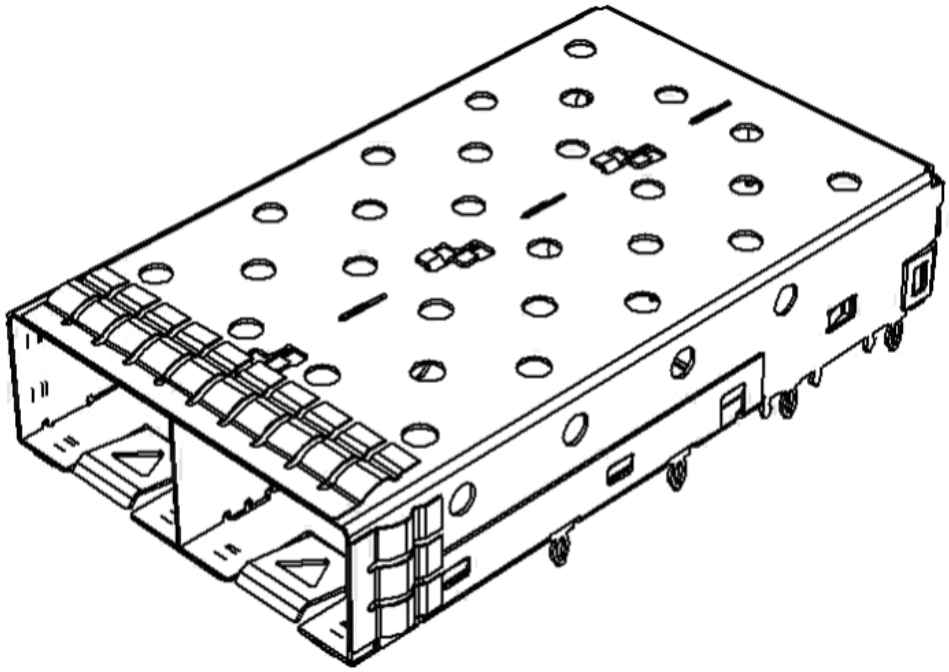

Figure 6-2 Two-Port Cage Example

Copyright © 2018 SNIA. All rights reserved.