US008515103B2

(12) **United States Patent**
Mei et al.

(10) **Patent No.: US 8,515,103 B2**
(45) **Date of Patent: Aug. 20, 2013**

(54) **3D STEREO EARPHONE WITH MULTIPLE SPEAKERS**

(75) Inventors: **David Mei**, Forest Hills, NY (US); **Jin Xia Bao**, Forest Hills, NY (US)

(73) Assignee: **Cyber Group USA Inc.**, Forest Hills, NY (US)

(*) Notice: Subject to any disclaimer, the term of this patent is extended or adjusted under 35 U.S.C. 154(b) by 353 days.

(21) Appl. No.: **12/927,703**

(22) Filed: **Nov. 22, 2010**

(65) **Prior Publication Data**

US 2011/0158440 A1 Jun. 30, 2011

Related U.S. Application Data

(60) Provisional application No. 61/284,940, filed on Dec. 29, 2009.

(51) **Int. Cl.**
H04R 5/02 (2006.01)
H04R 1/10 (2006.01)

(52) **U.S. Cl.**
USPC **381/309**; 381/74; 381/310

(58) **Field of Classification Search**
USPC 381/74, 309, 310, 370, 374, 379; 455/575.2–575.4
See application file for complete search history.

(56) **References Cited**

U.S. PATENT DOCUMENTS

3,751,608	A	8/1973	Weingartner	
4,453,050	A	6/1984	Enokido	
4,783,822	A	11/1988	Toole et al.	
6,097,827	A	8/2000	Yang	
6,369,952	B1	4/2002	Rallison et al.	
6,427,018	B1	7/2002	Keliiliki	
6,434,250	B1	8/2002	Tsuhako	
6,772,853	B2	8/2004	Yang	
7,006,649	B2	2/2006	Natvig	
7,356,156	B2	4/2008	Ruegg	
7,697,709	B2 *	4/2010	Mei et al.	381/379
8,000,490	B2 *	8/2011	Yang	381/371
8,116,502	B2 *	2/2012	Saggio et al.	381/380
2004/0213428	A1	10/2004	Lenhard-Backhaus	
2009/0220113	A1 *	9/2009	Tiscareno	381/309
2009/0232342	A1 *	9/2009	Oliveira et al.	381/382
2009/0279729	A1	11/2009	Huang	
2010/0046783	A1	2/2010	Huang	

* cited by examiner

Primary Examiner — Vivian Chin
Assistant Examiner — Ammar Hamid
(74) *Attorney, Agent, or Firm* — Collard & Roe, P.C.

(57) **ABSTRACT**

An earphone produces a three-dimensional stereo sound effect. The earphone has an ear cup with a front portion, a back portion, a front sound effect unit disposed in the front portion, a front sound resonator disposed in the front portion, a back sound resonator disposed in the back portion, and a back sound effect disposed in the back portion. A front speaker is disposed in the front portion of the ear cup. A back speaker is disposed in the back portion of the ear cup. A sound controller is disposed in the ear cup. A sound output unit is connected with the ear cup. The front speaker and the back speaker work together to create stereo sound in a first dimension and in a second dimension. One of the front speaker and the back speaker creates stereo sound in a third dimension.

24 Claims, 21 Drawing Sheets

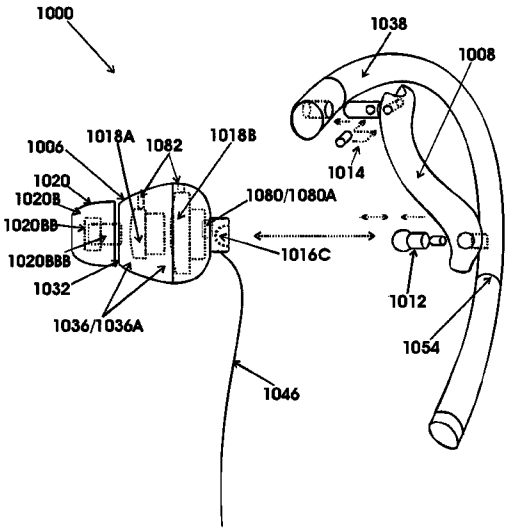

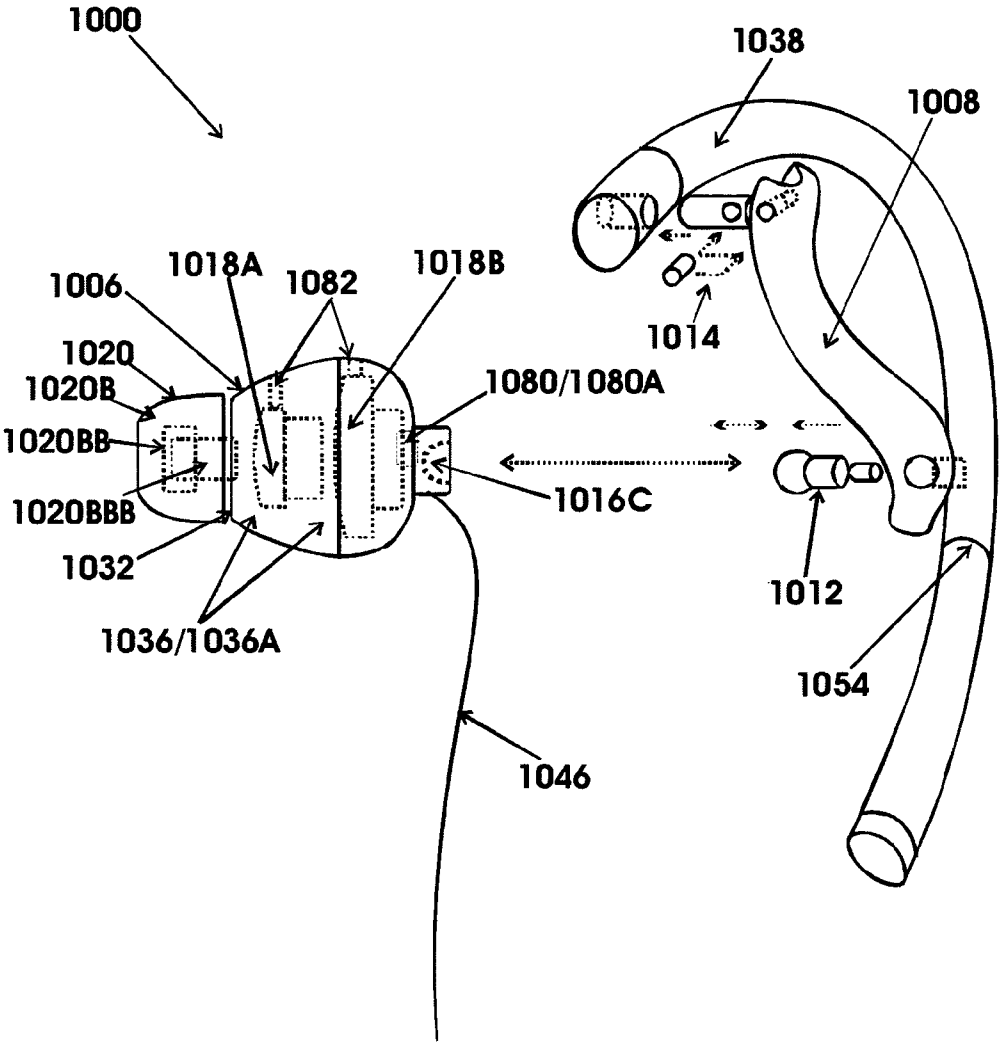
1000
1038
1008
1018A
1082
1018B
1006
1014
1020
1020B
1080/1080A
1020BB
1016C
1020BBB
1032
1012
1036/1036A
1054
1046

FIG. 1

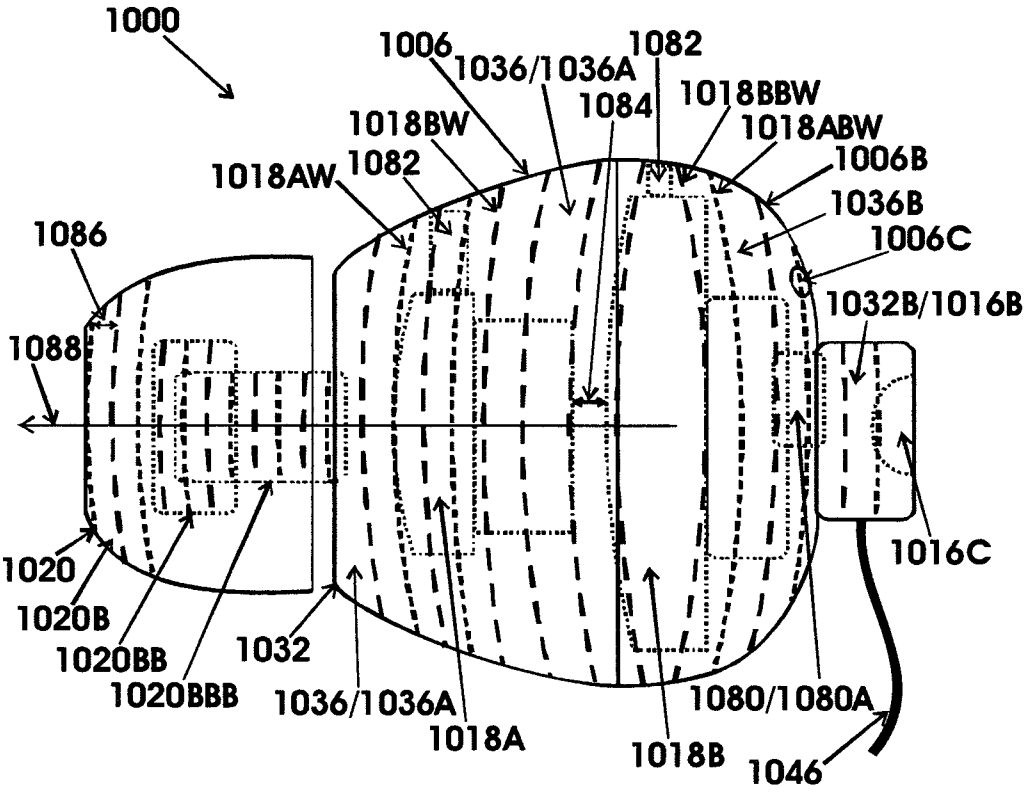
1000
1006
1036/1036A
1082
1018BBW
1084
1018BW
1018ABW
1006B
1018AW
1082
1036B
1086
1006C
1032B/1016B
1088
1016C
1020
1020B
1020BB
1020BBB
1032
1036/1036A
1018A
1018B
1080/1080A
1046

FIG. 2

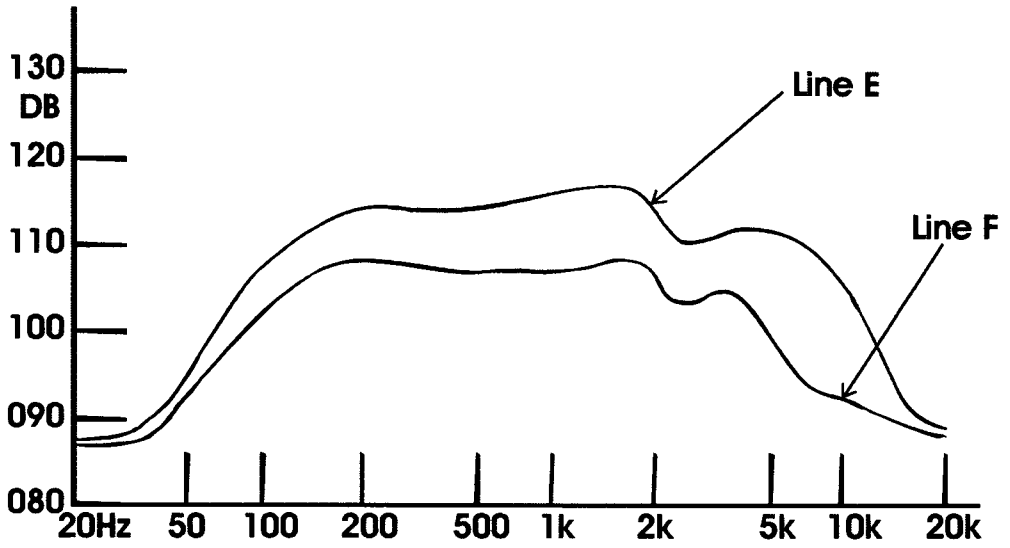
130
DB
120
110
100
090
080
20Hz
50
100
200
500
1k
2k
5k
10k
20k
Line E
Line F

FIG. 3

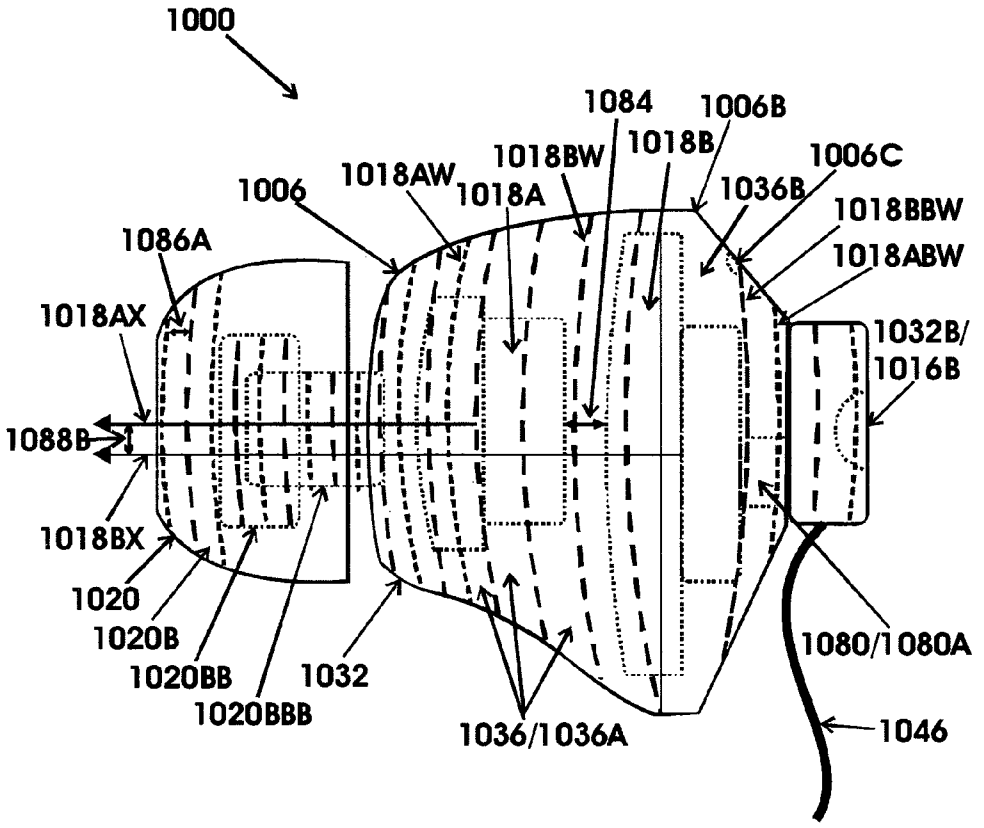
1000
1084
1006B
1018B
1018BW
1006C
1018AW
1018A
1036B
1006
1018BBW
1086A
1018ABW
1018AX
1032B/
1016B
1088B
1018BX
1020
1020B
1020BB
1020BBB
1032
1036/1036A
1080/1080A
1046

FIG. 4

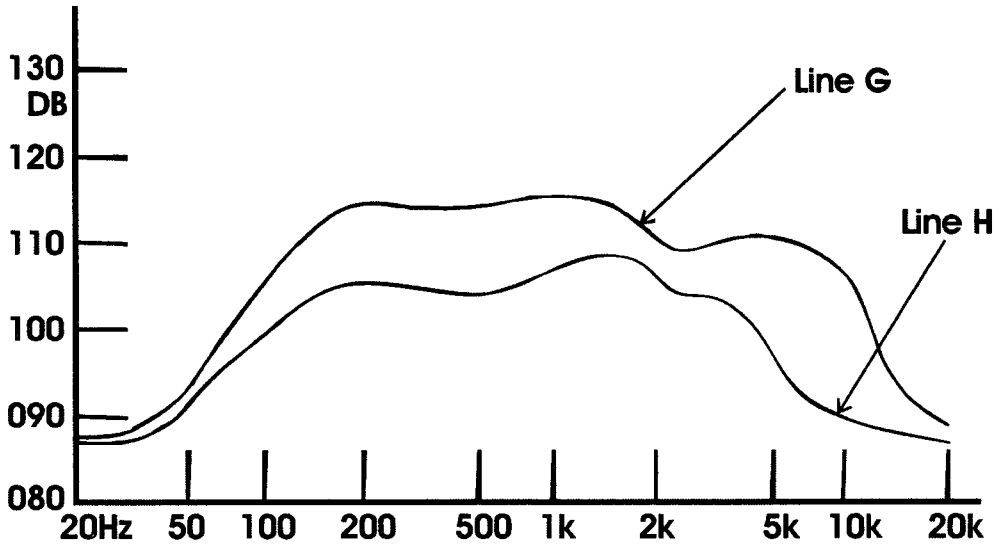
130
DB
120
110
100
090
080
20Hz
50
100
200
500
1k
2k
5k
10k
20k
Line G
Line H

FIG. 5

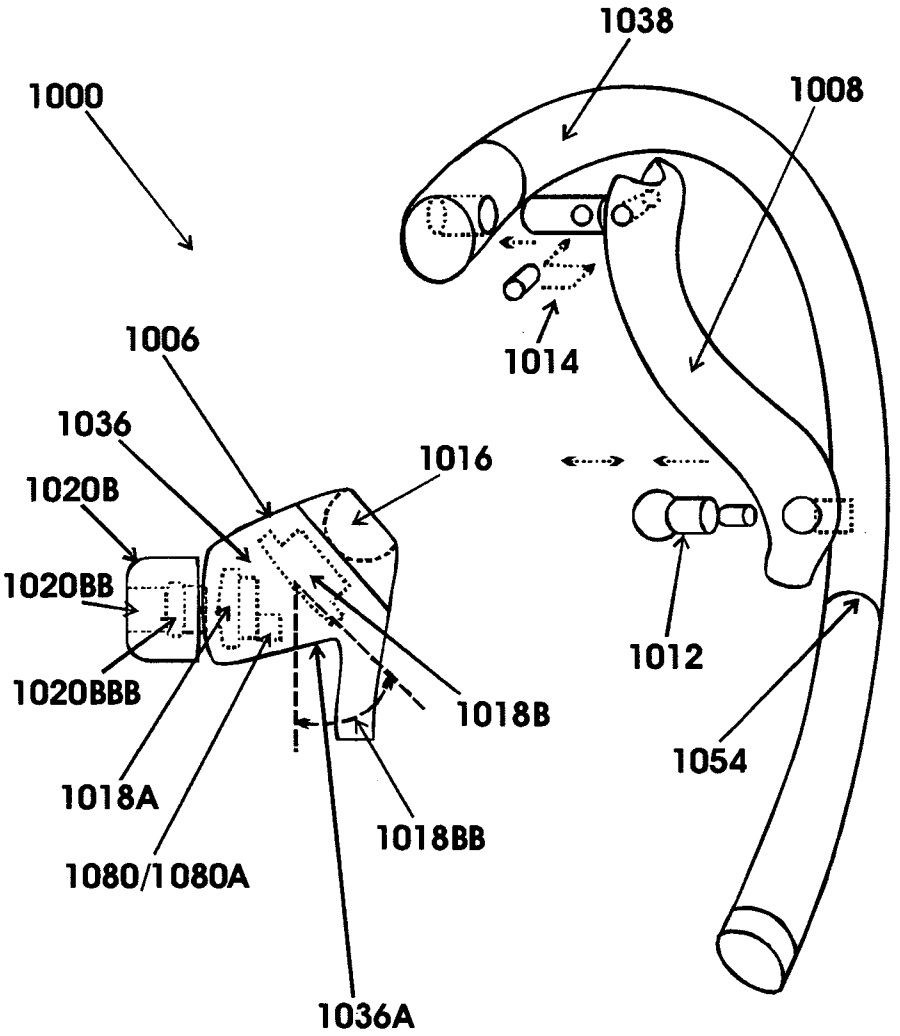
1038
1000
1008
1006
1014
1036
1016
1020B
1020BB
1012
1020BBB
1018B
1054
1018A
1018BB
1080/1080A
1036A

FIG. 6

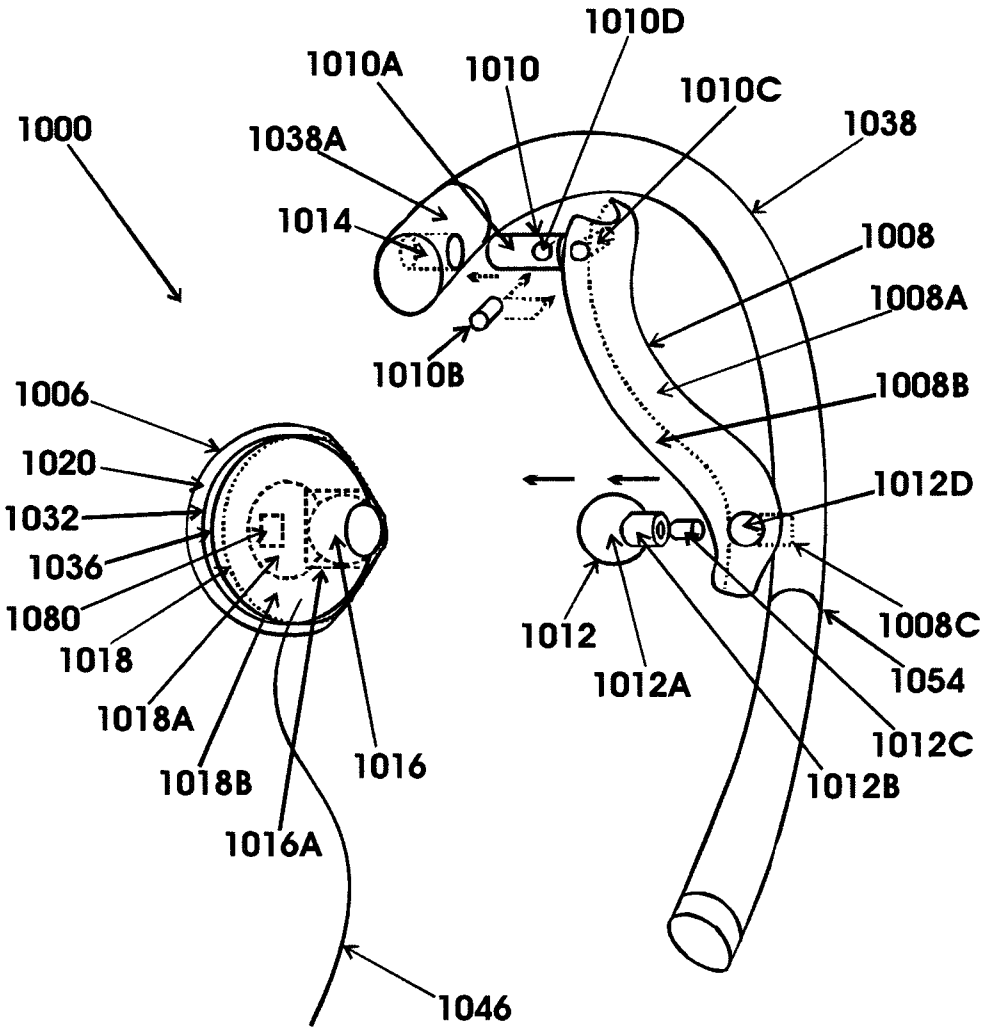
1000
1010D
1010A
1010
1010C
1038
1038A
1014
1008
1008A
1010B
1008B
1006
1020
1012D
1032
1036
1080
1018
1018A
1018B
1016
1016A
1012
1012A
1008C
1054
1012C
1012B
1046

FIG. 7

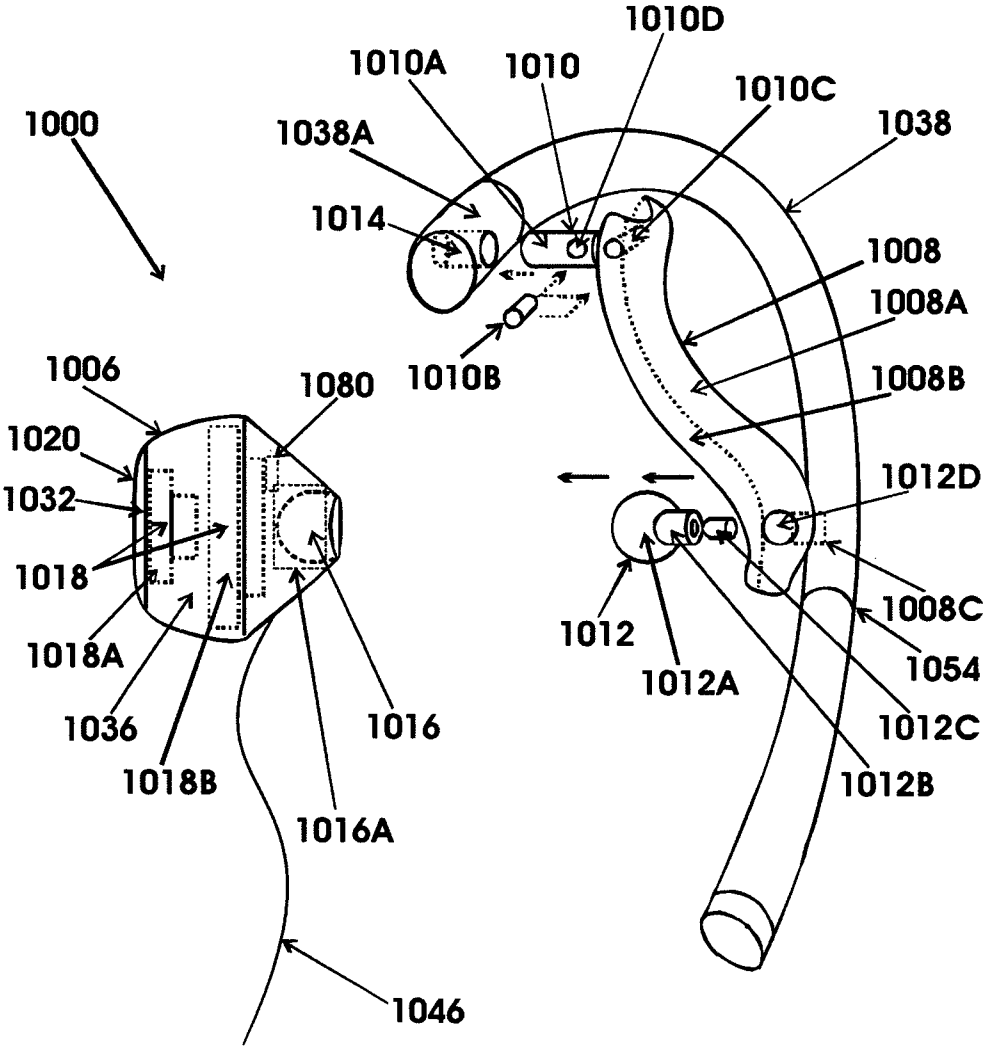
1000
1010D
1010A
1010
1010C
1038A
1038
1014
1008
1008A
1010B
1006
1080
1008B
1020
1032
1012D
1018
1008C
1012
1018A
1054
1012A
1036
1016
1012C
1018B
1012B
1016A
1046

FIG. 7A

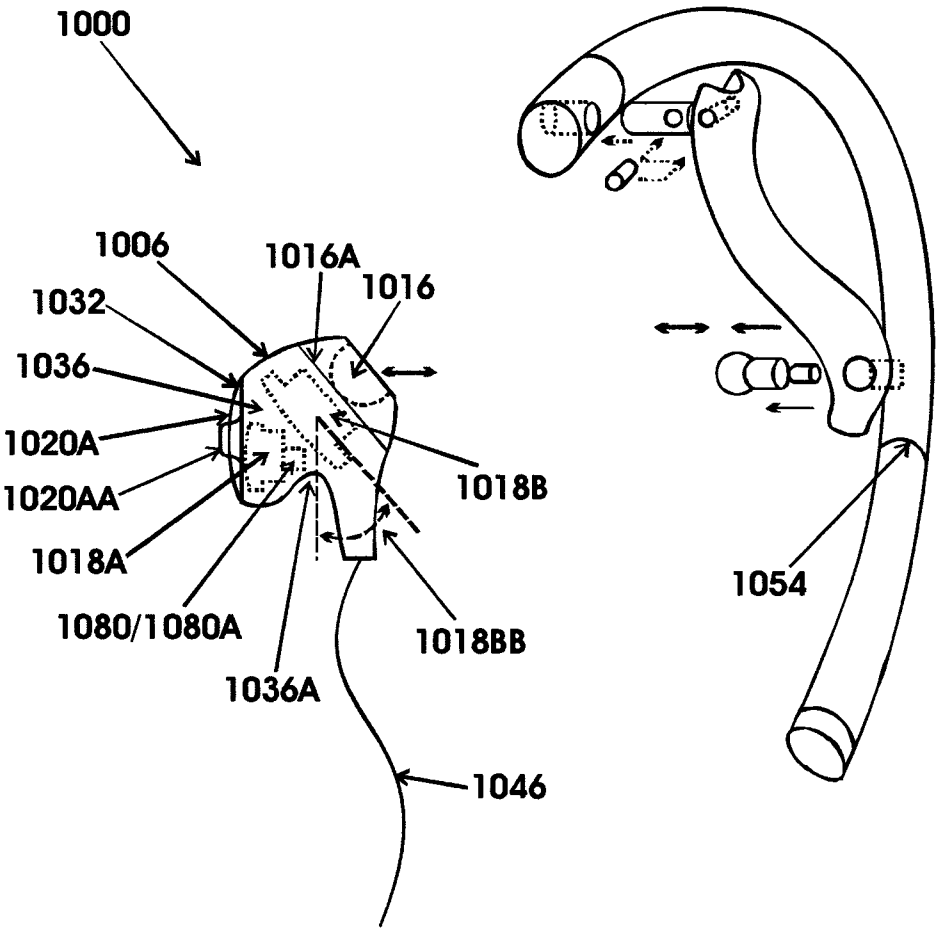
1000
1006
1016A
1016
1032
1036
1020A
1020AA
1018A
1080/1080A
1036A
1018B
1018BB
1046
1054

FIG. 8

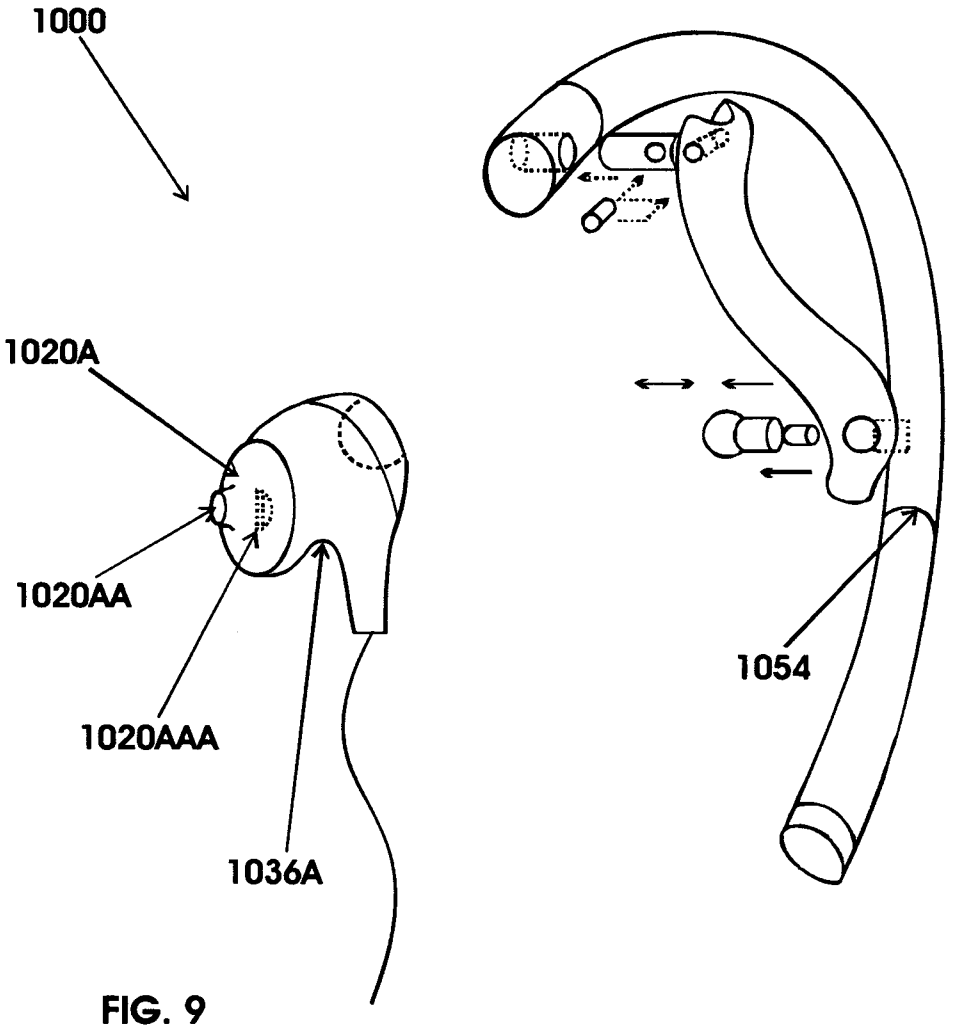

FIG. 9

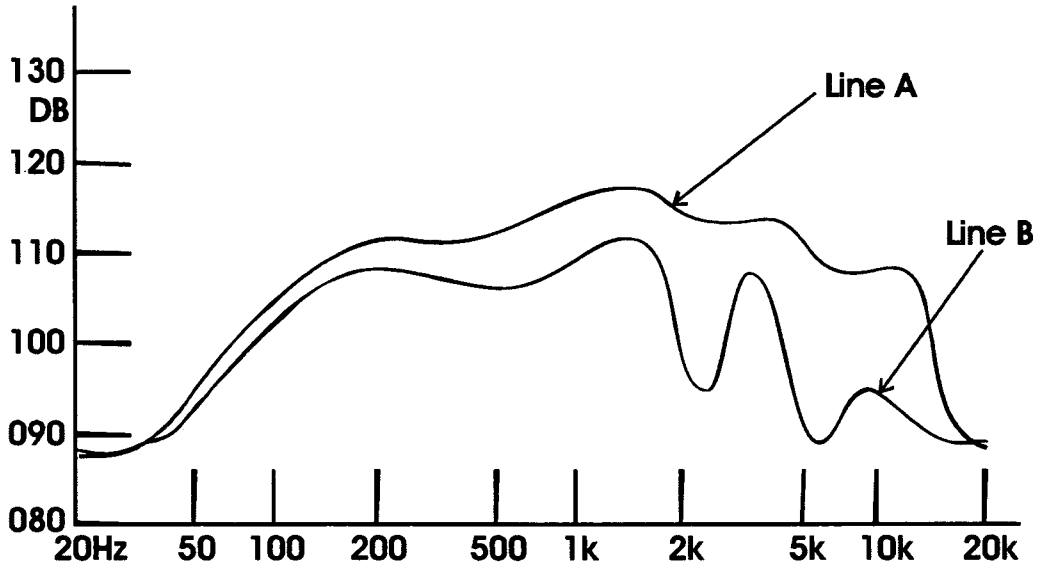
130
DB
120
110
100
090
080
20Hz
50
100
200
500
1k
2k
5k
10k
20k
Line A
Line B

FIG. 10

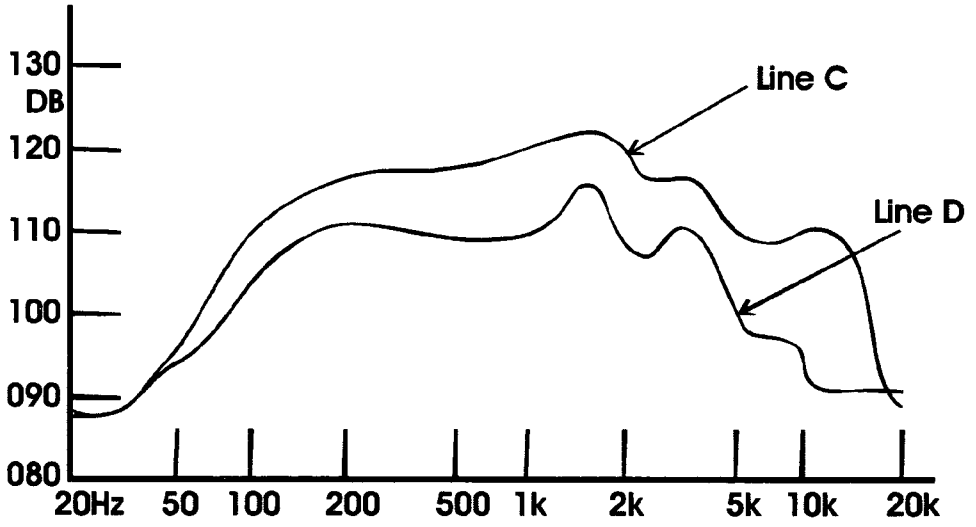
130
DB
120
110
100
090
080
Line C
Line D
20Hz
50
100
200
500
1k
2k
5k
10k
20k

FIG. 11

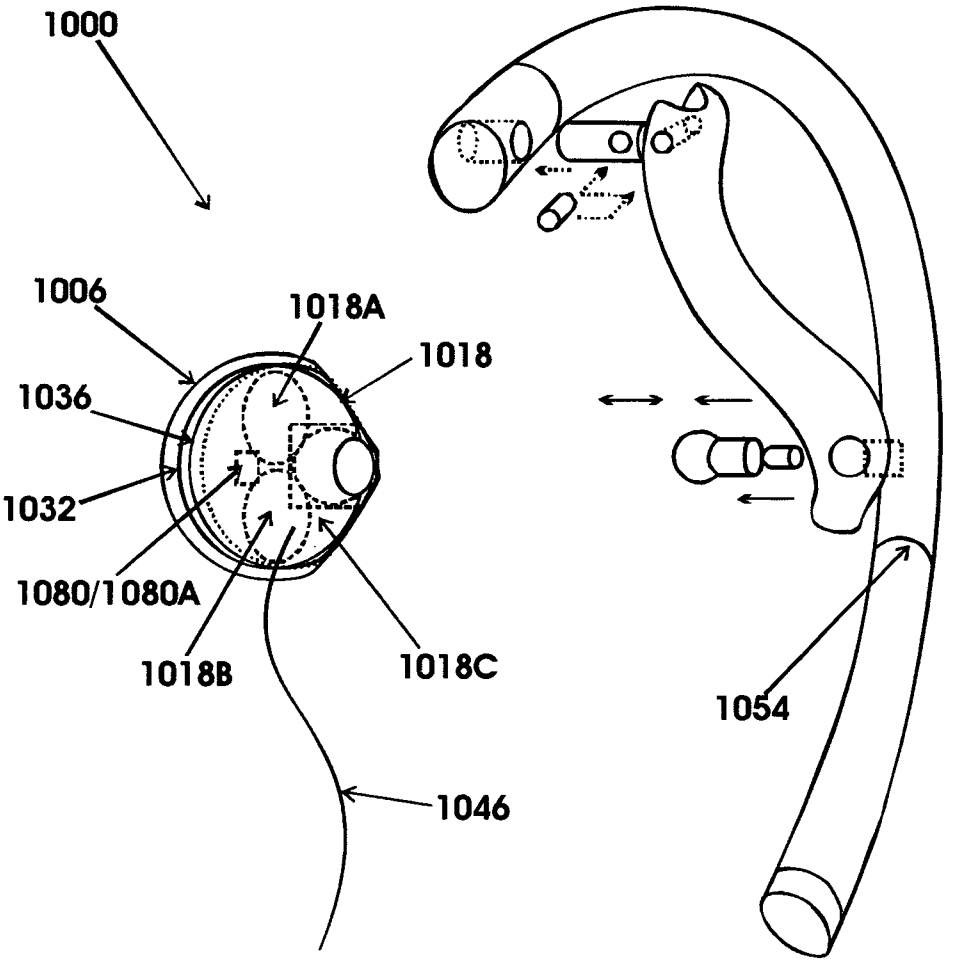
1000
1006
1018A
1018
1036
1032
1080/1080A
1018B
1018C
1054
1046

FIG. 12

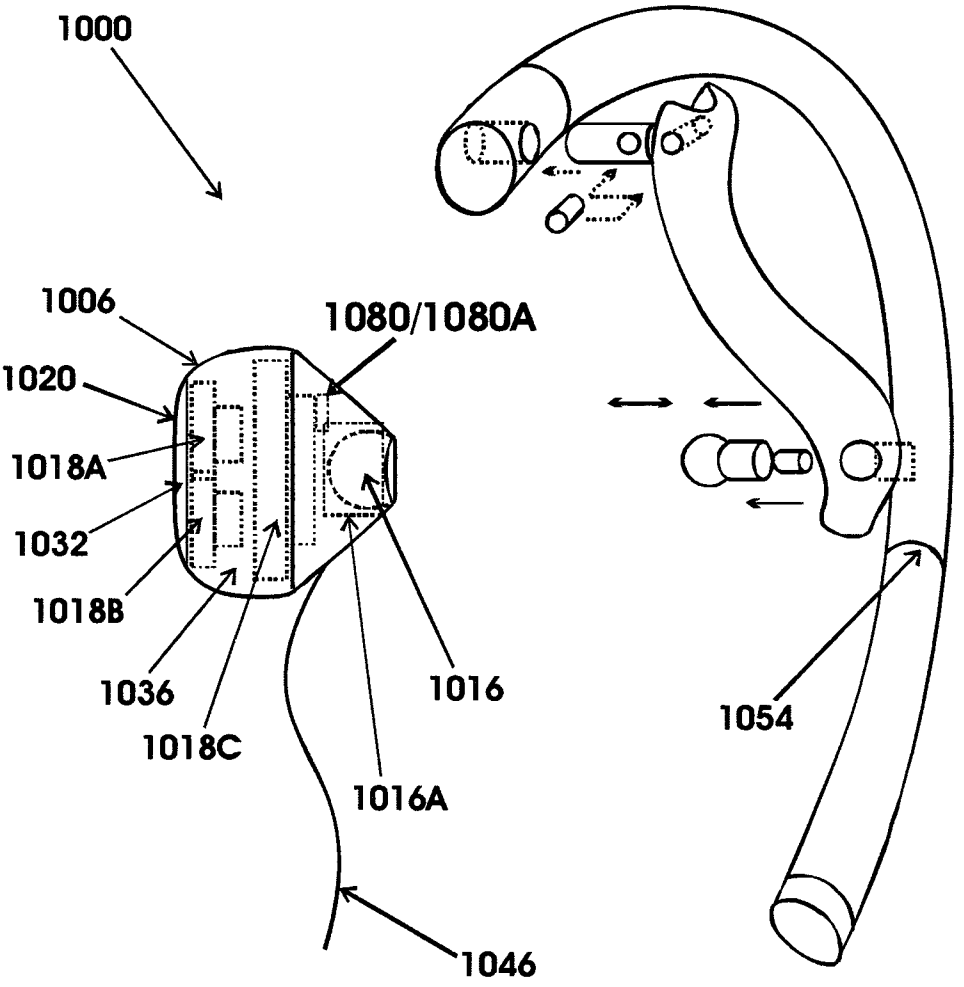
1000
1006
1020
1018A
1032
1018B
1036
1018C
1080/1080A
1016
1016A
1046
1054

FIG. 12A

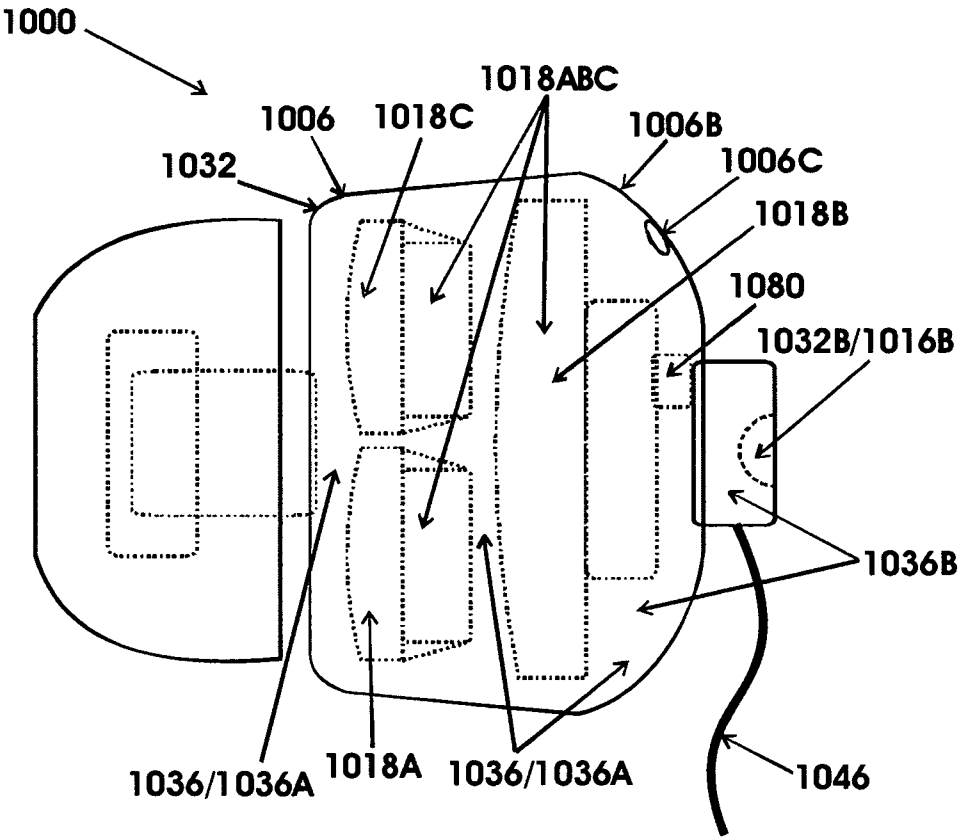
1000
1018ABC
1006
1018C
1006B
1032
1006C
1018B
1080
1032B/1016B
1036B
1036/1036A
1018A
1036/1036A
1046

FIG. 13

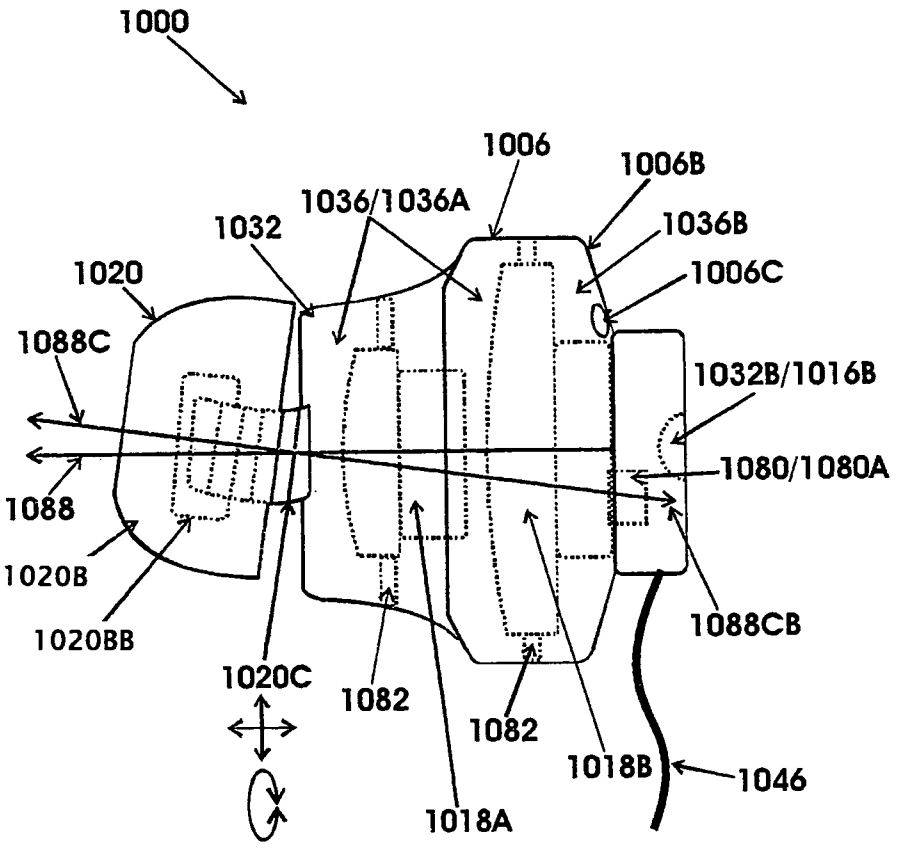
1000
1006
1006B
1036/1036A
1032
1036B
1020
1006C
1088C
1032B/1016B
1080/1080A
1088
1020B
1020BB
1088CB
1020C
1082
1082
1018B
1046
1018A

FIG. 14

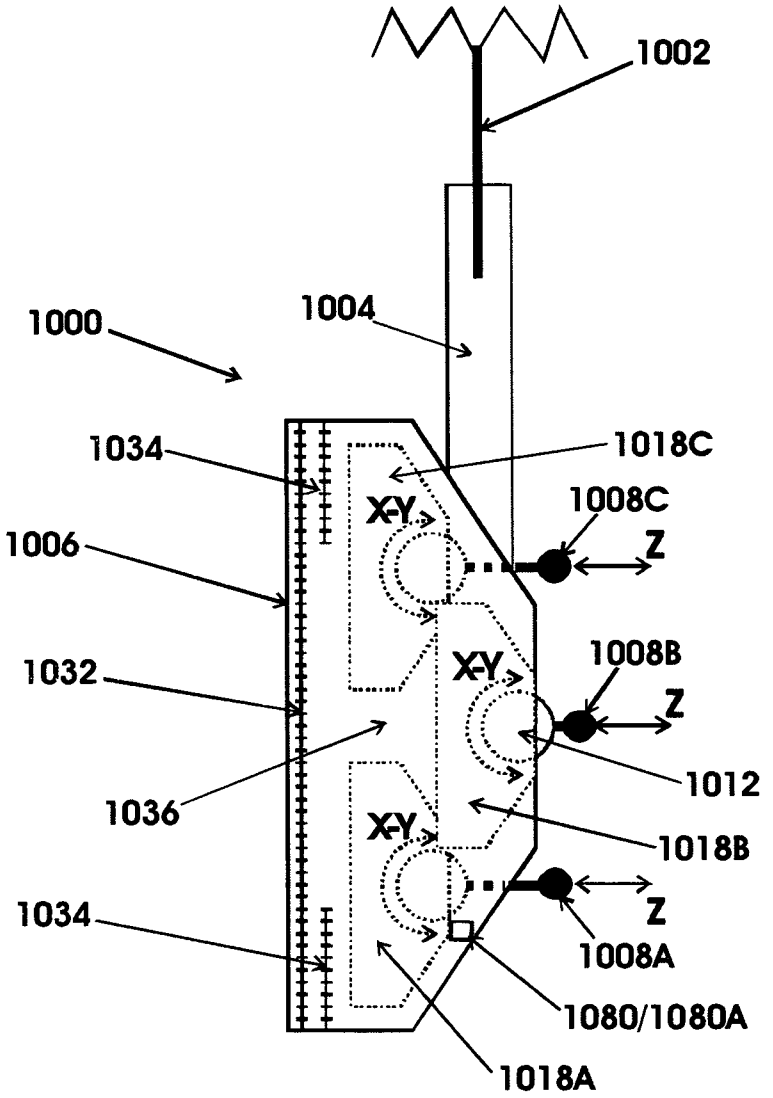
1002
1004
1000
1034
1018C
1008C
X-Y
Z
1006
1008B
X-Y
Z
1032
1012
1036
X-Y
1018B
Z
1034
1008A
1080/1080A
1018A

FIG. 15

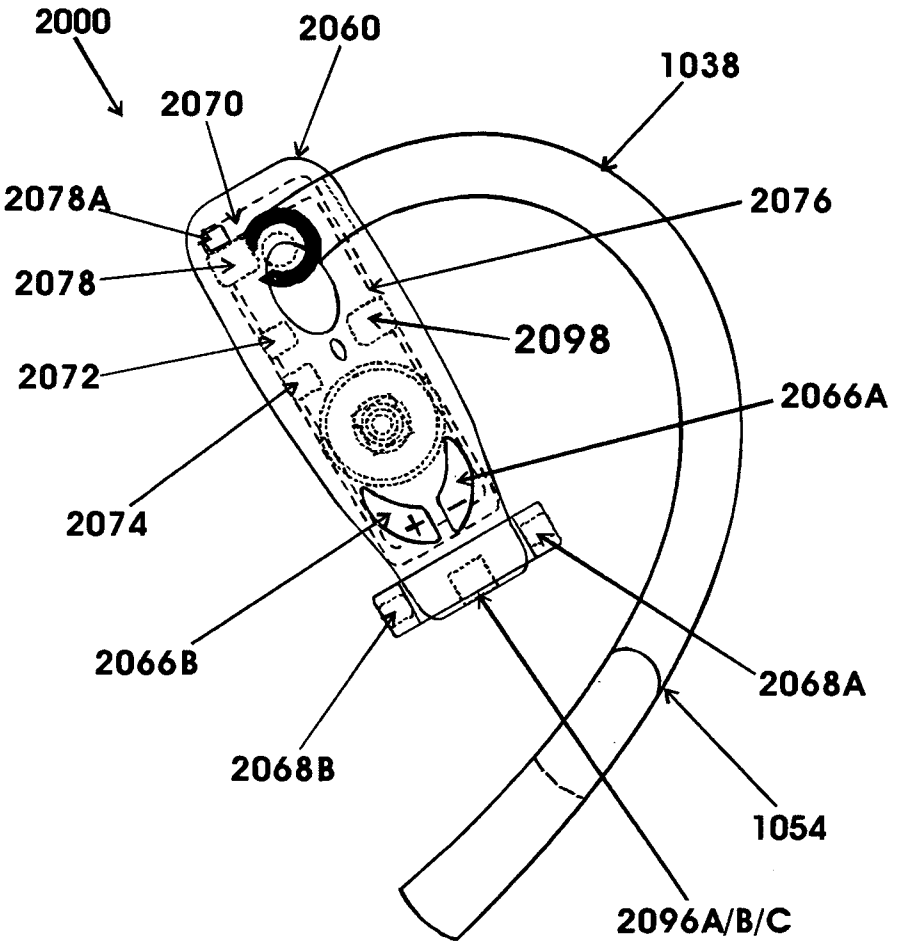
2000
2060
1038
2070
2078A
2076
2078
2098
2072
2066A
2074
2066B
2068A
2068B
1054
2096A/B/C

FIG. 16

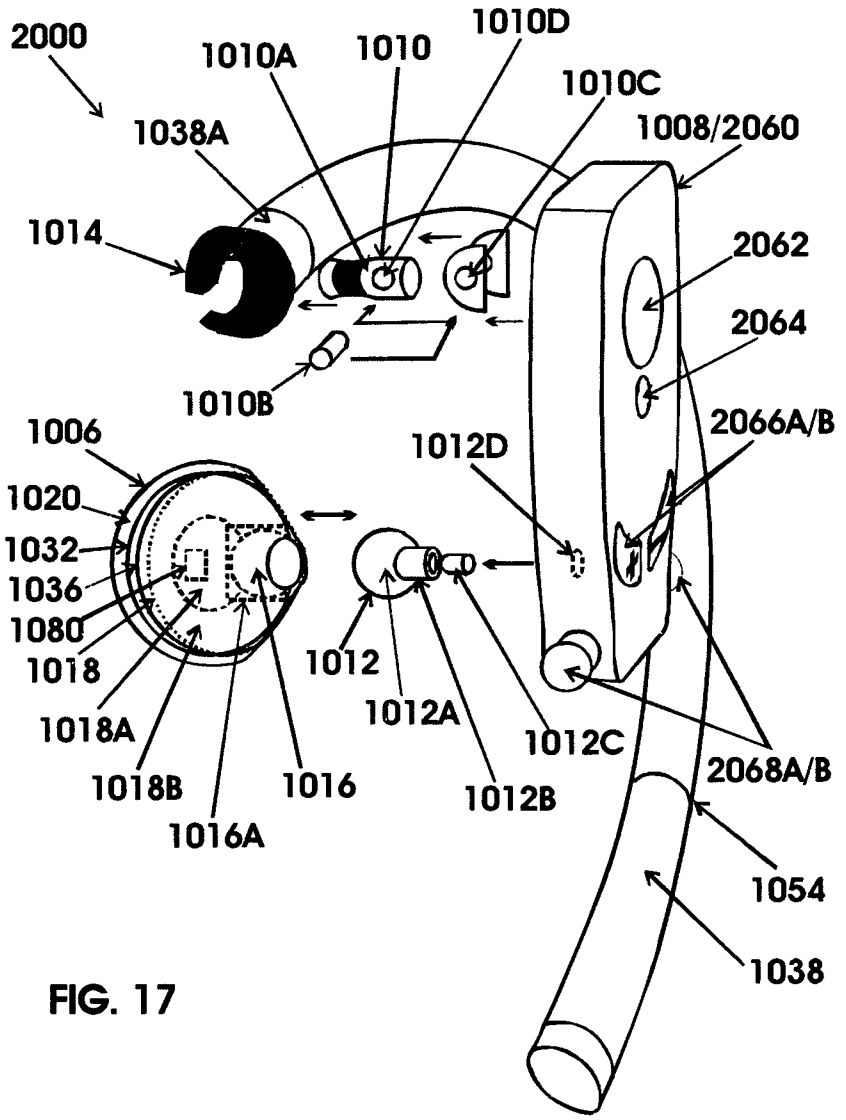
2000
1010A
1010
1010D
1010C
1008/2060
1038A
1014
2062
2064
1010B
2066A/B
1006
1012D
1020
1032
1036
1080
1018
1018A
1018B
1016A
1016
1012
1012A
1012B
1012C
2068A/B
1054
1038

FIG. 17

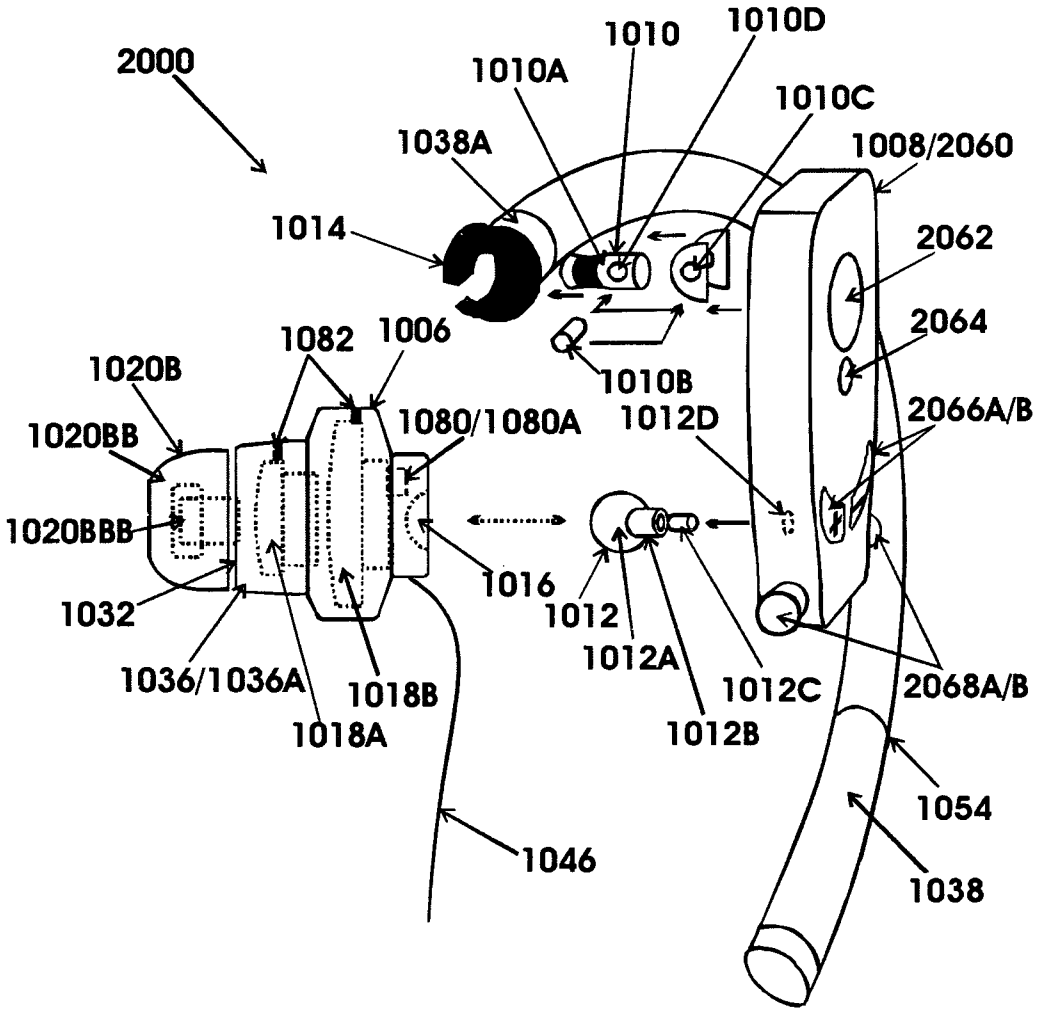
2000
1010
1010D
1010A
1010C
1038A
1008/2060
1014
2062
2064
1082
1006
1020B
1010B
1020BB
1080/1080A
1012D
2066A/B
1020BBB
1016
1012
1032
1012A
1036/1036A
1018B
1012C
2068A/B
1018A
1012B
1054
1046
1038

FIG. 18

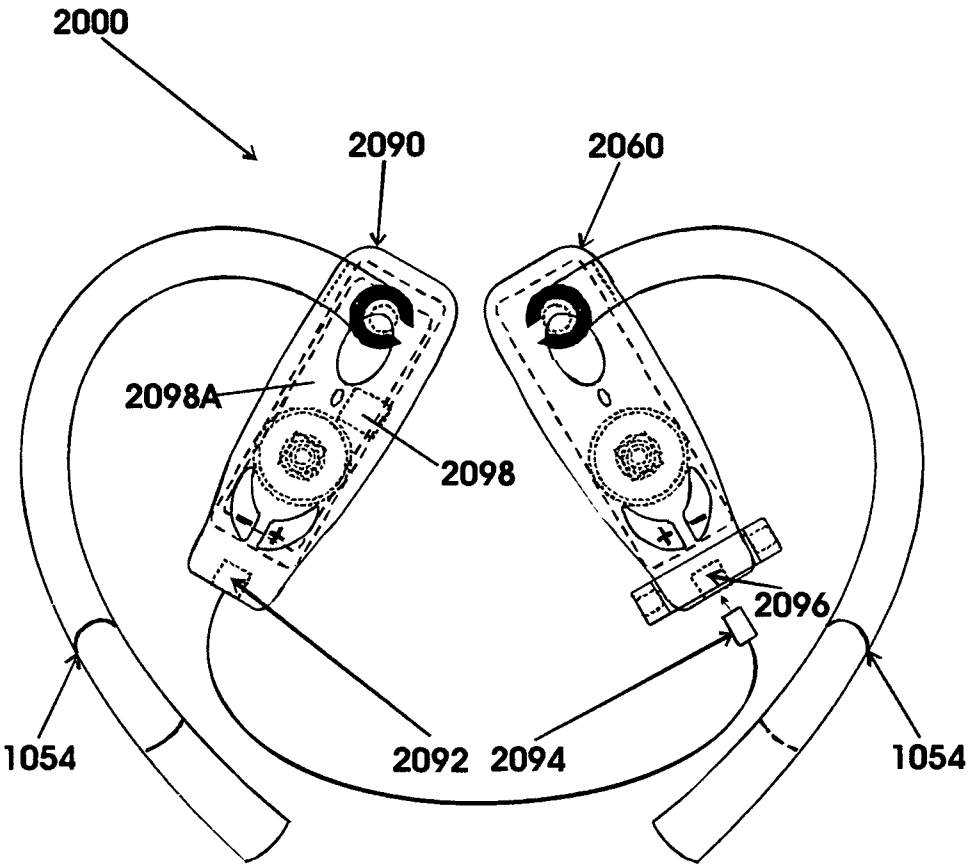

FIG. 19

3D STEREO EARPHONE WITH MULTIPLE SPEAKERS

CROSS REFERENCE TO RELATED APPLICATIONS

This application claims priority under 35 U.S.C. §119(e)(i) and the benefit of U.S. Provisional Application Ser. No. 61/284,940, entitled "Sound direction/stereo 3D adjustable earphone" filed Dec. 29, 2009, which is incorporated in its entirety by reference herein.

BACKGROUND OF THE INVENTION

1. Field of the Invention

The present invention is an improvement on U.S. Pat. No. 7,697,709 and relates to an earphone for use with audio systems and communication systems and more particularly to an earphone with multiple speakers (sound drivers) structured in a front-and-back straight arrangement at the same axis line or different axes lines, or structured in a front-and-back angled arrangement, to achieve three-dimensional stereo sound effects with bass/middle/high frequencies of sound and to achieve three-dimensional direction-adjustable stereo sound for hearing safety and wearing comfort.

2. The Prior Art

There are more and more types of earphones coming into the market, especially for many multi-functional MP3 players, MP4 players, and cell phones such as, Apple's iPod®, iPhone®, iPad®, etc. A big challenging issue in front of earphone developers and makers is that earphone size is demanded to become smaller and smaller and more focused on an In-Ear style for convenient and comfortable wearing, and at the same time, earphone sound quality is demanded to become higher and higher to match a full-scale sound in bass (low), middle, and high frequencies, and further, a real-stage-like 3D stereo sound space and effect. One speaker at a certain small size has not enough sound power to achieve full-scale sound quality. So-called stereo sound for small earphones, especially In-Ear earphones, only has a two-dimensional (X-Y) sound range, i.e. 2D sound with bass/middle/high frequencies. The three sound frequencies of bass/middle/high are only for different sound volumes and contents. In that case, the so-called stereo sound is for three frequencies of sound only, not for a real stereo sound, i.e. not for a three-dimensional (3D) sound space or effect. Due to the space limit, there is no third dimensional (Z) depth sound with those small earphones. Therefore, those small earphones are not able to achieve X-Y-Z three-dimensional stereo sound space/effect with bass/middle/high frequencies of sound. Of course, if there is a big earphone or headphone having a big space, multiple speakers can be put anywhere to have a fully arranged sound quality. Obviously, the dilemma is not only how to put more multiple speakers (multiple sound drivers) into a small earphone having a very limited size, but also how to arrange those multiple speakers for better 3D stereo sound effects.

As prior art, there are many types of small earphones having multiple speakers, i.e. multiple sound drivers, in the market already. The arrangements and structures of those multiple speakers still follow the traditional speaker arrangement: a parallel horizontal arrangement. The reason for arranging the speakers in a parallel horizontal arrangement is that a traditional sound study and research system needs to set all sound sources to be working at the same parallel level point within a certain sound environment, especially for one small earphone container containing multiple sound sources, i.e. multiple sound drivers. Even with those multiple sound drivers, the three sound frequencies of bass/middle/high are only for different sound volumes and contents, maybe in X-Y two-dimensional sound space.

The problem of those multiple speakers in the parallel position is that they are not able to develop a real stereo sound, especially for bass (low) frequency in a deep sense, because the area of the multiple parallel speakers is too small to have a good resonance depth space and effect. Those small earphones with multiple speakers are still only with a sound range in the X-Y axes - - - 2D sound with bass/middle/high frequencies, and not for a real stereo sound of 3D sound space or effect.

Apple In-Ear Headphones with Remote and Microphone have two drivers on each earpiece, one driver as a woofer and another one as a tweeter. Those two drivers are arranged parallel to one another for rich and detailed sound reproduction and bass response. Because the two sound drivers are arranged in parallel in a very small space, the bass response is not strong and is not rich enough and lacks deep sound space and effect in a third dimension (Z).

Shure provides two kinds of In-Ear earphones with multiple sound drivers, one with dual sound drivers and another one with triple sound drivers. Dual High-Definition Microdrivers for the item number SE425 are a tweeter and woofer for accurate and balanced sound in parallel structure. Triple High-Definition Microdrivers for the item number SE535 are one sound driver as a tweeter and dual sound drivers as woofers arranged in a parallel structure for spacious sound and rich bass. As for the other known earphones having multiple speakers, because the dual or triple drivers are arranged in parallel in a very small space, the bass response is not strong, is not rich enough, and lacks deep sound space and effect in a third dimension (Z).

M-Audio has a very famous In-Ear earphone, IE-40 acclaimed Ultimate Ears Technology, with three separate high-definition precision-balanced armature drivers for high, mid and low frequencies of sound. Ultimate Ears Technology is with a patented Dual-Bore Design to send a wider sound through separate acoustic canals for high and low channels, which allows the sound to be directly sent and mixed naturally in a user's ear. In other words, the Dual-Bore Design mixes all frequencies in a user's ear through a high frequency canal and a mid-bass canal into a user's ear, but does not mix all frequencies inside the earphone before delivering them into a user's ear. The dual drivers or triple drivers are arranged in a parallel structure. Also, the high and low canals are arranged in a parallel structure. Obviously, the bass response of IE-40 is not strong and is not rich enough because there is no resonance area inside IE-40 for bass deep response. Ultimate Ears of Logitich uses the same technology for its various earphones with multiple drivers.

There are two U.S. patent applications related to dual-frequency coaxial earphones: U.S. Patent Application No. 2009/0279729 A1 and U.S. Patent Application Publication No. 2010/0046783 A1. Those two applications discuss a shared magnet to work with dual frequency voice coils, one for low-frequency and another one for high-frequency. Those voice coils of low and high frequency speakers shared coaxially with one center magnet are not able to be independently and separately arranged or structured for stereo sound outputs. There is no deep space with those dual-frequency coaxial earphones.

An In-Ear earphone is a very particular earphone design that requires a special closed/isolated sound environment from the sound sources, to the sound effect area and resonance area, and to the output unit into a user's ear tunnels

directly and closely as much as possible. There are three basic considerations for In-Ear earphones: small size, real stereo sound quality with bass/middle/high sound frequencies, and wearing/hearing comfort into a user's ear tunnels. Those considerations have to be achieved within a very small, closed, and isolated sound space and output environment and structure, which usually is an ear cup/shell and an In-Ear mushroom head.

Through studying the above five kinds of earphone products, there are many problems and issues still needed to be solved. The first problem or issue is that when the In-Ear earphones are built smaller and smaller, the sound is highly demanded to have a real stereo sound quality in three dimensions (X-Y-Z). Within the very limited small space, the In Ear earphone needs a better structure, better sound system, better arrangement of multiple speakers and related resonance sound effect area for high quality X-Y-Z dimensional 3D sound achievement. The conventional stereo sound in two dimensions (X-Y) is not enough to satisfy people's needs, and actually is not a real stereo. All of the above five kinds of earphones have no third-dimensional depth sound quality (Z axis) because of their parallelized structures - - - no X-Y-Z 3D stereo sound space and effect.

The second problem is that all old and current earphones, including the above five kinds of earphones, are preset for sound direction and channel stereo effects and usually focus on the back head center point of the earphone user. When an earphone user uses the earphone too long, his back center point of hearing nerve may be damaged.

The third problem is that the sound effects and sound output directions are always separate in all earphone products, especially for In-Ear earphones. People need a new product with hearing safety and sound high quality worked together at the same time for life enjoyment including music and health.

Generally speaking, with known earphones there is no way to have the earphone sound quality with X-Y-Z 3D stereo sound effects and 3D sound directions. Those earphones including the above five kinds of earphones have so-called stereo sound effects with no third-dimensional (Z) depth sound quality and/or have sound direction with no third dimensional (Z) depth adjustment.

Therefore, in order to solve the foregoing problems and drawbacks, a need exists for an earphone, especially for an In-Ear earphone, that has 3D stereo sound effects and outputs in X-Y-Z three dimensions, just like real-stage sound effects. Another need exists for an earphone, especially for an In-Ear earphone, that has 3D sound direction adjustments in X-Y-Z three dimensions for hearing safety. A third need exists for an earphone, especially for an In-Ear earphone, that has 3D stereo sound effects and 3D sound directions working together simultaneously and synchronously to achieve the highest sound quality in 3D stereo space inside small earphone pieces, to minimize hearing damage and loss to an earphone user, and to maximize the 3D stereo sound instantaneous real time effect experienced by the earphone user.

SUMMARY OF THE INVENTION

The present invention provides an earphone, preferably an In-Ear earphone, with multiple speakers, i.e. sound drivers, having a front-and-back straight arrangement at a shared center axis line or different center axes lines for 3D stereo sound effects, with one or multiple speaker elements being disposed in a front portion of an ear cup of the earphone and one or multiple speaker elements being disposed in a back portion of an ear cup of the earphone to provide a third-dimensional (Z) depth sound resonance space for X-Y-Z 3D stereo sound effects and outputs with bass/mid/high sound frequencies. In one aspect, the earphone includes an ear cup containing a unit having multiple speakers arranged straightly with respect to the ear cup with at least one speaker being in front of at least one other speaker, the front and back speakers sharing a center axis line or having different center axes lines for sound waves. The ear cup also contains a front sound effect unit disposed in a front portion of the ear cup and a front sound resonator such as a front sound resonance unit or a front sound resonance area disposed in a front portion of the ear cup, has an even or uneven shaped design with a correspondingly shaped front sound effect unit and front sound resonator, has a sound controller such as a sound control unit or a sound configuration unit disposed in the ear cup, a back sound resonator such as a back sound resonance unit or a back sound resonance area disposed in a back portion of the ear cup, a back sound effect unit disposed in a back portion of the ear cup, a sound output unit connected with the ear cup, a sound balance hole unit, and a back female/joint unit to work with an adjustable holder unit connected to an adjustable ear band unit by attachment and/or detachment functions, for effecting, outputting, and directing 3D stereo sound in three dimensions (X-Y-Z axes).

In one aspect, a unit having multiple speakers is disposed in the ear cup unit of the earphone. This unit includes a small speaker disposed in a front portion of the ear cup, a large speaker disposed in a back portion of the ear cup, the speakers being aligned at a shared center axis line or being aligned at different center axes lines. The small speaker is positioned at front and the large speaker is positioned at the back in order to structure enough sound resonance area to have stereo sound with three-dimensional (X-Y-Z) effects, i.e. real 3D stereo sound effects. The front speaker and the beck speaker work together for a two-dimensional (X-Y) stereo sound wider effect and the back large speaker creates a depth sound in a third-dimension (Z) for X-Y-Z 3D stereo sound effects and an X-Y-Z 3D stereo sound space.

There are many ways to have 3D stereo sound effects of the earphone. The front and back speakers may have different sizes or the same sizes, and may be straightly aligned sharing a center axis line in order to work with the sound effect unit and resonance unit for balanced and equaled 3D stereo sound waves, effects, and outputs.

The front and back speakers, with different sizes or same sizes, may be straightly aligned at different axes lines to work with the sound effect unit, resonance unit, and sound controller to produce 3D (X-Y-Z) stereo sound waves, effects, and outputs.

Another kind of speaker arrangement according to the invention may include the front and back speakers being oriented at angles with respect to each other. For example, the front speaker may be oriented straight with respect to the orientation of the earphone and the back speaker may be oriented with a certain angle with respect to the orientation of the earphone, preferably with a twenty-five degree angle. Alternatively, the front speaker may be oriented with an angle with respect to the orientation of the earphone while the back speaker is oriented straight with respect to the orientation of the earphone. Alternatively, both of the front and back speakers may be oriented at angles with respect to the orientation of the earphone. This angled-arrangement of either of the front or back speakers or both of the speakers causes special sound waves and effects and outputs in three dimensions.

The shape of the ear cup of the earphone is directly related to the front sound effect unit outside the ear cup and/or inside the ear cup. The ear cup shape, usually called the outside of

the sound effect wall/unit, can be evenly designed or unevenly designed to work with the inside sound effect unit. The outside front sound effect unit and the inside front sound effect unit may be just one unit with outside wall/face and inside wall/face together, or may be different units. The front sound effect unit is to work with the sound waves of the multiple speakers at the same axis line or different axes lines, and alternatively is to work with the angled-speaker arrangement of the front-and-back multiple speakers for 3D stereo sound effects and outputs. These same principles are also applicable to the back sound effect unit.

The ear cup shape of the earphone is, at the same time, directly related to the front sound resonator inside the ear cup. The front sound resonator inside the ear cup is to work with the sound waves and bounced sound reactions of the front-and-back multiple speakers at the same axis line or different axes lines, or alternatively with the angled-speaker arrangement of the front-and-back multiple speakers for 3D stereo sound effects and outputs. For example, the front sound resonator may have a specially-designed curved shape for inside 3D stereo sound resonance effects and for outside wearing comfort which allows the earphone to fit onto a user's ear that is shaped like a bowl.

The sound controller works with the front and back multiple speakers and analyzes, manages, and configures all digitalized original music data into the front and back speakers to create sound waves that work inside the front sound effect unit, sound resonator, the front portion of the ear cup, the back portion of the ear cup, the back sound effect unit, and the back sound resonator, for two-dimensional wider stereo sound plus stereo sound in a depth of a third dimension at the same time.

In another aspect, the earphone includes an ear cup containing multiple speakers with at least one speaker in the front of the ear cup, at least one speaker in the back of the ear cup, the front and back speakers being straightly arranged along the same center axis line or parallel center axes lines for sound waves. The ear cup also may have at least one three-dimensional direction-adjustable unit connected with at least one of a front end and a back end of the speaker cup, a front sound resonator, an even or uneven shape design with a correspondingly shaped front sound effect unit and front sound resonator, a sound controller, a back sound effect unit, a back sound resonator, and a back female/joint unit to work with an adjustable holder unit connected to an adjustable ear band unit by attachment and/or detachment functions, for effecting, outputting, and directing 3D stereo sound in X-Y-Z axes dimensions.

According to this aspect of the invention, the stereo sound effect and output from an earphone having a 3D direction-adjustable unit has three functions: producing In-Ear stereo sound output that is direction-adjustable, producing In-Ear 3D stereo sound effect that is adjustable in three dimensions, and providing In-Ear wearing comfort at the same time.

Furthermore, the stereo sound effect from an earphone having multiple direction-adjustable units works for a small or big earphone or headphone and has two functions: producing stereo sound output that is direction-adjustable in three dimensions and producing stereo sound effect that is adjustable in three dimensions at the same time.

In another aspect, the earphone includes a wireless carrier unit that may contain a circuit board, a wireless communication chip, e.g. a Bluetooth, a 2.4G, or any other kind of wireless communication chip, a switch unit, a light indicator unit, voice control units, and a microphone unit.

A mother board may be inside the carrier unit. In this aspect, there may also be a CPU unit, a memory unit, a battery unit, and a USB connector unit in the wireless carrier unit. Additionally, there may be a Multiple Player Unit inside the carrier unit.

The wireless earphone contains speaker cup units, front-and-back speakers/units arranged straightly at the same center axis line or different center axes lines, sound controllers, a sound effect unit, sound resonators, speaker output units, and a sound output or direction-adjustable unit for 3D stereo sound effects.

The wireless carrier unit may have a male unit adjustable in three dimensions (X, Y, & Z) attached to the carrier unit to work adjustably with an ear holder unit through a hole or socket female unit. The hole or socket female unit may be designed as a big C style. At the same time, there may be a three-dimensionally rotatable male unit attached to the carrier unit to work adjustably with the speaker cup unit through a socket/female unit.

The wireless earphone may further include an adjustable joint unit disposed on the bottom piece of the ear band unit to facilitate adjustment of the ear band on a user's ear for comfort and stability.

In short, the present invention provides a system that achieves high stereo sound quality with a real time stereo sound in two-dimensional (X-Y) wider sound plus stereo sound in a depth of a third dimension (Z) for X-Y-Z 3D stereo sound effects and outputs by using front and back multiple speakers straightly arranged at the same axis line or different axes lines to create a real 3D stereo sound space or effect.

An object of the present invention is to provide an earphone, such as In-Ear earphone, with multiple speakers in a front-and-back straight arrangement providing adjustable sound effects and outputs in three dimensions with bass/mid/high sound frequencies.

Another aspect of the present invention is to have a back speaker straightly positioned behind the front speaker to create stereo sound waves in a depth of a third-dimension (Z) for stereo sound effect and two-dimensional (X-Y) wider stereo sound for X-Y-Z 3D stereo sound effects.

Yet another object of the present invention is to provide an earphone with front-and-back multiple speakers arranged straightly, i.e. along the same axis line or along different parallel axis lines, to work with sound waves, a sound effect unit, a sound resonator, a sound controller, sound balance hole unit, and a sound output unit for X-Y-Z 3D stereo sound effects and outputs simultaneously and synchronously.

Another object of the present invention is an earphone with front-and-back multiple speakers straightly arranged at the same axis line or different axes lines to work with sound waves, a sound effect, a sound resonator, a sound controller, a sound balance hole unit, and one or multiple direction-adjustable sound output units for X-Y-Z 3D stereo sound effects and outputs and a 3D direction-adjustable stereo sound simultaneously and synchronously.

Yet another object of the present invention is to provide an earphone with different shapes and functions of the ear cup. The ear cup contains different shapes and functions of a sound effect unit and of a sound resonator and of a sound balance hole unit to work with the front-and-back multiple speakers arranged straightly at the same axis line or different axes lines for a better stereo sound space and effect in X-Y-Z three dimensions. The sound resonator can produce an improved harmony.

Another object of the present invention is to provide an earphone with front and back speakers with the back speaker or front speaker positioned at an angle for X-Y-Z 3D stereo sound space and effect.

Yet another object of the present invention is to provide an earphone with a different quantity of front and back multiple speakers straightly aligned at the same axis line or different axes lines, or a different size thereof, such as an earphone with one small speaker at front and one large speaker at back, two small speakers at front and one large speaker at back, or all front and back speakers having the same size or different sizes, etc., for depth stereo sound effects in a third dimension.

Another object of the present invention is to provide an earphone having front-and-back multiple speakers arranged straightly and having an attachable or detachable joint structure and function for the ear cup to work with an ear band unit and ear cup holding unit for wearing comfort and hearing safety with 3D stereo sound effects and direction-adjustable 3D-sound at the same time. The ear band may have an adjustable joint part.

Yet another object of the present invention is to provide an earphone having multiple speakers straightly arranged in front and back with changeable sound effects, output structures, and functions for inputting into a user's ear tunnel. The earphone provides wearing comfort and sound hearing safety while providing 3D stereo sound effects and adjustable sound direction in three dimensions at the same time.

Another object of the present invention is to provide an earphone with X-Y-Z 3D stereo sound wireless communication function and structure including an ear cup unit containing all above mentioned units, functions, and structures for X-Y-Z 3D stereo sound effects and 3D direction-adjustable sound.

Yet another object of the present invention is to maximize the three basic considerations of an In-Ear earphone: small size, real 3D stereo sound quality with bass/middle/high sound frequencies, and wearing/hearing comfort, within a very small, closed, and isolated sound space and output environment and structure.

BRIEF DESCRIPTION OF THE DRAWINGS

Other objects and features of the present invention will become apparent from the following detailed description considered in connection with the accompanying drawings. It should be understood, however, that the drawings are designed for the purpose of illustration only and not as a definition of the limits of the invention.

In the drawings, similar reference characters denote similar elements throughout the several views.

FIG. **1** is a side view of an earphone in accordance with a first embodiment of the invention.

FIG. **2** is an enlarged side view of a portion of the earphone shown in FIG. **1**.

FIG. **3** is a chart of sound stereo wave/level frequency wave lines in association with the embodiment shown in FIGS. **1** and **2**.

FIG. **4** is an enlarged side view of another embodiment in accordance with the invention.

FIG. **5** is a chart of sound stereo wave/level frequency wave lines in association with the embodiment of FIG. **4**.

FIG. **6** is a side view of another embodiment of one earphone in accordance with the invention.

FIG. **7** is a back view of another embodiment of one earphone in accordance with the invention with a rear view of a portion of the earphone.

FIG. **7**A is a side view of the embodiment shown in FIG. **7**.

FIG. **8** is a side view of another embodiment of one earphone in accordance with the invention.

FIG. **9** is a side view of the embodiment of FIG. **8**.

FIG. **10** is a chart of sound stereo wave/level frequency wave lines in association with the embodiment shown in FIG. **8**.

FIG. **11** is another chart of sound stereo wave/level frequency wave lines in association with the embodiment shown in FIG. **9**.

FIG. **12** is a back view of another embodiment of one earphone in accordance with the invention with a rear view of a portion of the earphone.

FIG. **12**A is a side view of the embodiment shown in FIG. **12**.

FIG. **13** is an enlarged top view of a variant of the embodiment of FIG. **12**.

FIG. **14** is an enlarged side view of another embodiment of one earphone in accordance with the invention.

FIG. **15** is a side view of another embodiment of one earphone in accordance with the invention.

FIG. **16** is a view of another embodiment of one earphone in accordance with the invention.

FIG. **17** is a view of a variant of the embodiment of FIG. **16**.

FIG. **18** is a view of the embodiment of FIG. **17** with a side view of a portion of the embodiment.

FIG. **19** is a perspective view of an embodiment having a pair of wireless earphones working and connected to each other in accordance with the invention.

DESCRIPTION

FIGS. **1**, **2**, **4**, and **6** show an earphone **1000** which may be the left or the right portion of the earphone or headset for providing 3D stereo earphone with multiple speakers inside, and show various speaker cup units **1006** with front/back speakers **1018**A and **1018**B for X-Y-Z 3D stereo sound effects with bass/middle/high frequencies of sound. In the embodiments shown in FIGS. **1**, **2**, and **4**, front/back speakers **1018**A and **1018**B are straightly arranged along the same axis line or along different parallel axis lines. In FIGS. **1** and **2**, speakers **1018**A and **1018**B share center axis line **1088**. In FIG. **4**, speakers **1018**A and **1018**B are arranged along different axis lines **1018**AX and **1018**BX that are parallel to each other. In the embodiment shown in FIG. **6**, speakers **1018**A and **1018**B have an angled orientation.

Speaker cup unit, i.e. ear cup **1006** is designed for an In-Ear earphone **1000** with a center speaker unit containing two speakers (sound drivers) **1018**A and **1018**B arranged in a front/back straight array with a front sound effect unit **1032** and a front sound resonator **1036**/**1036**A. The front sound effect unit can also produce sound resonance. In order to form these two speakers (double sound drivers) in this front and back straight array, one speaker **1018**A is located at the front of the earphone to handle high frequency of sound. Another speaker **1018**B is located at the back of the earphone to handle bass (low) and middle frequencies of sound. In a reversed way, the front speaker **1018**A could handle bass sound and the back speaker **1018**B could handle middle and high frequencies of sound. There are many possible ways to design the arrangements of each speaker for handling different sound frequencies.

The small high definition driver **1018**A is directly arranged in the front side of the earphone and the large high efficiency driver **1018**B is straightly arranged in the back side of the small driver **1018**A with a specially-designed sound controller **1080**/**1080**A for a very strong bass and sympathetic response. The sound controller **1080**/**1080**A is a specially-designed frequency configuration unit in this embodiment. Having the double speakers **1018**A and **1018**B in a front/back straight arrangement creates a stage-like real sound delivery

system or a X-Y-Z three dimensional (3D) sound stereo space because the double speakers **1018**A and **1018**B explore stereo sounds in X-Y axes senses in a wide horizontal way for two dimensional sound, plus, at the same time, the back large speaker **1018**B delivers a very strong bass and middle sounds from the back to front to provide a third dimensional (Z-Axis) stereo sound in a deep straight vertical way for three dimensional (X-Y-Z axes) stereo surrounding sound effects with bass/mid/high sound frequencies.

The different arrangements of speakers disclosed may include the front and back speakers facing the same direction, facing the same direction offset at an angle, facing each other directly, or facing each other offset at an angle.

Therefore, a listener can hear a strong bass sound from deep back to near front in a powerful sound wave with a Z-axis deep sense. At the same time, the listener can hear real stereo sounds with X-Y axes in very detailed form from front, from left, from right, from back, and from everywhere the stereo music is destined to play in three dimensions (3D) X-Y-Z) with full-scaled sound frequencies of bass/middle/high.

The 3D stereo sound is for a sound space and effect in three dimensions (X-Y-Z). The three-sound frequencies of bass/middle/high are only for different sound volumes and contents, maybe in X-Y two-dimensional sound space, or maybe in X-Y-Z three-dimensional sound space. The Z-axis depth stereo sound is the key element of X-Y-Z 3D stereo sound space and effect. Only with a Z-axis depth stereo sound, can the three sound frequencies of bass/middle/high be simultaneously and synchronously achieved for X-Y-Z 3D sound space or effect.

The size arrangements of the front speaker **1018**A and back speaker **1018**B are preferably a small sound driver at front and a large sound driver at back, or the same size at front and back, or a large at front and a small at back, etc., if needed.

The arrangement, design, function, shape, form, size, structure, location, type, and material of the double drivers front/back straight array unit of back large speaker **1018**B and front small speaker **1018**A may vary if needed to apply into the various embodiments of earphones shown in FIGS. **1** to **19**.

With different shapes and functions of the ear cup **1006**, there are different shapes and functions of front sound effect unit **1032**, front sound resonator **1036**/**1036**A which can be a harmony unit, and sound balance hole unit **1006**C to work with the front and back straightly arranged multiple speakers at the same axis line or different axes lines for a better stereo sound space and effect in three dimensions (X-Y-Z).

The front sound effect unit **1032** and front sound resonator **1036**/**1036**A which can be a front sound resonance area or a front sound resonance unit also include a space of the front speaker **1018**A and the area between the front speaker **1018**A and the back speaker **1018**B. Due to natural properties of a sound wave, sound bounce, sound re-bounce, and sound gravity, the sound effect unit **1032** and sound resonator **1036**/**1036**A work with the sound waves **1018**AW and **1018**BW for 3D stereo resonance and harmony sound effects. The different sizes, shapes, and structures of the front sound effect unit **1032** and of the sound resonator **1036**/**1036**A cause different 3D stereo sound resonance and harmony effects.

The size, shape, function, structure, design, and material of the sound effect unit **1032** and of the sound resonance unit **1036**/**1036**A may vary.

The computerized sound controller **1080** which can be a wave/level/frequency controller unit is inside the ear speaker cup unit **1006** containing the multiple speaker center unit. Also, the sound controller **1080** may contain a sound unit **1080**A. Sound unit **1080**A controls the sound system and/or the sound frequency configuration system of multiple speaker units that includes front speaker **1018**A and back speaker **1018**B.

The sound controller **1080** directs the high sound into the first speaker **1018**A and directs the bass/middle frequencies of sounds into the second speaker **1018**B in order to achieve and best balance the stereo sound effects for a very strong and powerful bass and resonance/harmony performance stereo in three dimensional (3D) sound effects under the double drivers straight array.

The design, function, material, shape, size, type, and location of the sound controller **1080**/**1080**A may vary.

The double drivers front/back straight array unit of speakers **1018**A and **1018**B works with a sound effect unit **1032** and resonant function unit/area **1036**/**1036**A for better 3D stereo sound outputs, hearing safety, and wearing comfort, at the same time.

Inside a front sound output unit **1020** of the ear speaker cup unit **1006** is a sound delivery and filter unit **1020**B containing the inside sound output unit **1020**BB and inside sound focus piece **1020**BBB for an In-Ear style of earphone.

The front sound output unit **1020** with sound delivery and filter unit **1020**B and inside sound output unit **1020**BB disposed inside is shaped like a mushroom head or has a duck mouth shape in order to get in a user's ear tunnel fully, tightly, and comfortably to minimize outside unwanted sound to achieve a special sound environment inside the ear cup **1006** from the specially arranged sound sources **1018**A and **1018**B, to the sound effect area **1032** and resonance areas **1036**/**1036**A, and to the output unit **1020** into a user's ear tunnel directly and closely for X-Y-Z 3D stereo sound effects and outputs.

The sound focus piece **1020**BBB concentrates all sounds from the speaker unit into the inside sound output unit **1020**BB to achieve In-Ear stereo sound output. The speaker unit may contain one speaker, two speakers, such as speakers **1018**A and **1018**B, or more speakers.

Also, the inside sound output unit **1020**BB has a sound isolation function to isolate outside noises and unwanted sounds.

The mushroom head or duck mouth shape of sound output unit **1020** is removable and replaceable if needed for different human ears, and is exchangeable with other sound output designs, such as those having an In-Ear style, an Onto-Ear style, an On-Ear style, etc. In other words, the sound output units **1020**, **1020**A, **1020**AA, **1020**AAA, **1020**B, **1020**BB, and **1020**BBB are all interchangeable and replaceable if needed.

The size, design, shape, location, method, and material of the sound output-delivery/focus units **1020**, **1020**B, **1020**BB, and **1020**BBB and speaker cup unit **1006** may very.

There is a speaker base unit **1082** to hold the speakers **1018**A and **1018**B inside the cup **1006**. The design, function, size, shape, location, and material of the speaker holding unit **1082** may vary if needed to apply to all of the embodiments shown in the FIGS. **1** to **19**.

A socket/female joint unit **10160** located at the back side of the cup unit **1006** works with a speaker cup holding unit **1008** and ear band unit **1038** via an attachable and detachable function and structure if needed.

Because the present improvement was simultaneously researched and developed together with the invention of the Sound Direction/Stereo 3D Adjustable Earphone of U.S. Pat. No. 7,697,709, the unit **1016**C may work with the detachable speaker cup holding unit **1008** through the ball/male unit **1012** for attachment or detachment functions and structures.

The unit **1008** works with the ear band unit **1038** through the attachment and detachment unit **1014**. With the attachable/detachable unit **1016**C, the speaker cup unit **1006** may work with the sound 3D adjustable direction units **1008**/**1038** to independently achieve holding and adjusting functions for hearing comfort, hearing safety, wearing comfort, and wearing stability, for example so that the earphone may be worn for sports.

The attachment/detachment socket/female joint unit **1016**C and the ball/male unit **1012** may be reversed so that the ball/male unit is on the back side of the cup unit **1006** and the socket/female joint unit is with the holding unit **1008**.

The design, function, size, shape, location, method, and material of the unit **1016**C may vary.

A wire line **1046** may connect earphone **1000** to any suitable audio/visual player. Wire line **1046** may also be replaced via a wireless unit (not shown). A microphone with a volume/MP controller (not shown) may be attached on the wire unit **1046**.

A joint part **1054** on the ear band **1038** adds joint movement function and structure. The ear band **1038** can be adjusted or bended at the joint part **1054** to follow a user's ear shape for wearing comfort and stability. Joint part/unit **1054** can be any kind of joint part, structure, method or material and can be any size.

In addition, earphone **1000** may contain well-known devices and features (not shown) such as a micro central processing unit/multichip package (CPU/MCP) unit and a mini memory unit, a light emitting diode (LED) or liquid crystal display (LCD) unit, a computerized level controller unit, an attachable universal serial bus (USB) stick or disc unit, a mini speaker unit, a switch unit and voice volume controller, a wireless or cable unit, a circuit board unit, a battery unit, a microphone unit, an integrated micro sound amplifier unit, a sound purifier unit, an internal or external antenna unit, a wireless unit, and an Internet protocol (IP) based communicator unit. The attachable USB stick or disc unit may contain a micro CPU/MCP unit and memory unit. The switch unit and voice volume controller unit may be in a key style, a wheel style, a touch panel style, or a digital LED/LCD screen selection style. The micro CPU/MCP unit (digital signal processor) may provide full range digital audio. The wireless unit may deliver to or receive from a circumaural wireless stereo radio frequency (RF) system, or an internet server system.

The CPU/MCP unit may contain a digital signal processor providing full range digital audio output of earphone **1000**.

Therefore, 3D stereo earphone **1000** may be used wirelessly or through a cable in a regular earphone system, a regular headset/headphone system, a cell phone, a multiple player, a radio system, a telephone system, a personal computer (PC) system, a notebook computer, an internet communication system, a cellular/satellite communication system, a home theater system, a car/ship/airplane audio system, a game, ear hearing assistance equipment, or medical equipment.

FIG. **2** explores further the present development of earphone **1000** in detail.

As shown in the enlarged drawing of earphone **1000**, the small speaker **1018**A and large speaker **1018**B work together to form the double drivers front/back straight array unit. The front speaker **1018**A delivers a sound wave **1018**AW having a high sound frequency. The back speaker **1018**B delivers a sound wave **1018**BW having bass and middle sound frequencies. The sound waves **1018**AW and **1018**BW work together to form 3D stereo sound effects in the X-Y-Z axes, or in other words, a 3D (X-Y-Z) stereo sound space, with bass/mid/high sound frequencies. The sound wave lines **1018**AW and **1018**BW can be in parallel at the same distance, can cross over, or can be oriented at different angles based on the position arrangements of the front and back speakers.

A distance **1084** is between the speakers **1018**A and **1018**B. A sound depth **1086** is between speaker sound waves **1018**AW and **1018**BW. The sound depth **1086** is a key element for real 3D stereo sound effects. The sound depth **1086** is directly related to the distance **1084** and reacts with sound effect unit **1032** and sound resonant unit **1036**/**1036**A for sound having depth in the third dimension along the Z axis.

The position arrangement of those two speakers **1018**A and **1018**B is very important, preferably with one in front and one in back in a straight array along a shared, i.e. the same, center axis line **1088**, which in this embodiment also represents a horizontal axis of the ear cup **1006**. The axis line **1088** is a center point line of the multiple speakers **1018**A and **1018**B. Those front and back speakers **1018**A and **1018**B are all aligned straightly standing and facing out at 90 degrees with respect to this axis line **1088**.

The orientation of the speakers along this same axis line **1088** helps the sound waves **1018**AW and **1018**BW and the depth **1086** to develop at the same wave shape, wave rate, and wave distance for even and equal 3D stereo sound effects. Similarly, this straight array with the speakers having the same center axis **1088** also allows the focus points and wave out lines of the sound waves **1018**AW and **1018**BW to be evenly and equally distributed around the center area of 3D stereo sound space.

More importantly, the depth **1086** determines the Z axis depth development of 3D stereo sound of the double drivers front/back straight array unit in the X-Y-Z axes sound effects. If the depth **1086** is too big, it may over-react the Z axis development of 3D stereo sound of the double drivers front/back straight array unit. If the depth **1086** is too small, it may weaken the Z-axis development of the 3D stereo sound of the double drivers front/back straight array unit. Many experiments are needed to get the depth **1086** in the right position for different kinds of speakers, not only for Z-axis sound effect or development, but also for X-Y axes sound effects or development.

First, the depth **1086** needs to be the right amount for better sound effects in all three dimensions along the X, Y, and Z axes. The right amount of the depth **1086** is directly related to the distance **1084**, and is preferably one to two mm between the speakers **1018**A and **1018**B. If the distance **1084** is less than one mm, the speakers **1018**A and **1018**B may touch each other during vibration of the sound waves. If the distance **1084** is bigger than two mm, it may cause the depth **1086** to be too big.

Second, at the same time, the depth **1086** may be influenced when the speaker sound waves **1018**AW and **1018**BW work within the sound resonator **1036**/**1036**A. The sound resonator **1036**/**1036**A has an outside shape and an inside space to create certain sound resonance/harmony effects. Due to natural properties of a sound wave, sound bounce, sound rebounce, and sound gravity, the different sizes, shapes, and structure of the front sound effect unit **1032** and the sound resonator **1036**/**1036**A cause different 3D stereo sound resonance and harmony effects. If the sound resonator **1036**/**1036**A is too tight or small for the work of speaker sound waves **1018**AW and **1018**BW, the depth **1086** may be distorted. If the sound resonator **1036**/**1036**A is too loose or big for the work of speaker sound waves **1018**AW and **1018**BW, the depth **1086** may be weakened or not well.

Third, at the same time also, the depth **1086** may be influenced when the speaker sound waves **1018**AW and **1018**BW

work with the sound effect unit **1032**. The sound effect unit **1032** has an outside shape and an inside shape to create certain sound effects, and is usually an outside shell with a sound effect, or an inside sound effect piece or wall. If the sound effect unit **1032** is too straight or curved for the work of speaker sound waves **1018**AW and **1018**BW, the depth **1086** may be distorted or weakened or not well.

There is a very small, limited and closed sound working space inside the speaker cup **1006**. So, within that very limited sound working space, the sound waves **1018**AW and **1018**BW of the speakers **1018**A and **1018**B, respectively, the straight array same axis line **1088**, the depth **1086**, the distance **1084**, the front sound effect unit **1032**, the sound resonator **1036/1036**A, and the sound output unit **1020** are all very critical for working together well and synchronously in the creation of 3D stereo sound in X-Y-Z dimensions.

The location, size, design, shape, function, and material of elements and features **1032**, **1036/1036**A, **1018**AW, **1018**BW, **1084**, **1086**, **1088**, and **1006** may vary if needed to apply to the various embodiments shown in FIGS. **1** to **19**.

Because the sound wave is three-dimensional, when sound waves **1018**AW and **1018**BW wave closely into the front area **1036** and sound output unit **1020** of the ear cup **1006**, the sound waves **1018**ABW and **1018**BBW wave closely into the backside **1006**B of the earphone cup **1006** which has a back sound resonator **1036**B and a back sound effect/female joint unit **1032**B/**1016**B. The sound waves **1018**AW and **1018**BW may bounce off the sound effect unit **1032** and resonator unit **1036/136**A thereby becoming the back sound waves **1018**ABW and **1018**BBW, as the speakers are generally made to deliver sound towards the front. The speakers may, however, be made to deliver sound towards the front and back so that back sound waves **1018**ABW and **1018**BBW emerge directly from the speakers in the direction of the back of the earcup. Holes **1006**C may be at the front and back of the earcup in order to balance out the sound waves at both ends. The speakers may even deliver sound in all directions, i.e. in 360 degrees. The sound waves **1018**ABW and **1018**BBW wave into the backside **1036**B to create the back sound effects through working with the back sound resonator **1036**B and back sound effect/female joint unit **1032**B/**1016**B. The back sound resonator **1036**B may be a back sound resonance area or a back sound resonance unit. One or more backside holes **1006**C release the back sound waves **1018**ABW and **1018**BBW in order to balance a better front resonance and sound outputs for 3D stereo sound effects. The back sound effect/female joint unit **1032**B/**1016**B contains the back sound effect unit **1032**B and the back attachable or detachable female joint part **1016**B to work with the sound 3D adjustable direction units **1008/1038** (shown on FIG. **1**) if needed to independently achieve holding and adjusting functions for earphone **1000** hearing comfort and safety. The joint part **1016**B could be a male part or any kind of adjustable unit.

The backside hole unit **1006**C may be located in the front, at a side, or at the bottom of the earphone and may be any kind and have any size and shape if needed.

The sound controller **1080/1080**A configures music-player, original, sound-stereo frequencies into the speakers **1018**A and **1018**B. The sound controller **1080** may contain a capacitor unit **1080**A with a capacitance of 4.7 uF for more accurate configuration of original-sound digital signals from the music player. The capacitor unit **1080**A may have any capacity and be any kind, size, or type of capacitor. Preferably, the sound controller **1080/1080**A configures high frequency into the front speaker **1018**A and bass/middle frequencies into the back speaker **1018**B synchronously. Of course, there are many possible ways of stereo sound configuration for achieving better sound stereo output with minimized digital sound loss or distortion. For example, the sound controller **1080/1080**A may configure bass frequency into the front speaker **1018**A and high/middle frequencies into the back speaker **1018**B synchronously.

The location, size, design, shape, function, and material of elements or features **1032**B/**1016**B, **1036**B, **1018**ABW, **1018**BBW, **1006**B, **1006**C, and **1080/1080**A may vary if needed to apply to all of the embodiments shown in FIGS. **1** to **19**.

FIG. **3** shows different sound wave lines E and F caused by earphones having different depths **1086** when the front and back speakers are straightly arranged at the same center axis line **1088**. The Line E is a sound wave line when the depth **1086** is kept at one mm. The sound output volume of the Line E is very high and strong. The sound wave change of the Line E is very natural and balanced. The Line F is a sound wave line when the depth **1086** is kept bigger than two mm. The sound output volume of the Line F is smaller and weaker. The sound wave change of the Line F is not very natural and balanced. Obviously, the Line E sound output is much better than Line F sound output for 3D (X-Y-Z) stereo sound effects.

Of course, the depth **1086** when the speakers are straightly arranged at the same center axis line **1088** may vary in order to achieve different sound output stereo 3D effects as the original stereo music requires.

FIG. **4** shows another embodiment in which ear cup **1006** has an uneven shape and contains the front/back speakers **1018**A and **1018**B straightly arranged at the front and back of the earphone with an axis width **1088**B between different center axis lines **1018**AX and **1018**BX of speakers **1018**A and **1018**B, respectively. The width **1088**B is caused by the speaker **1018**A straightly arranged at the front of the earphone with a center axis line **1018**AX that is upwards from the center axis line **108**BX of speaker **1018**B, and by the speaker **1018**B straightly arranged at the back of the earphone with a level axis line **1018**BX downwards from the center axis line **1018**AX of speaker **1018**A. The axis lines **1088**AX and **1088**BX are center point lines of the multiple speakers **1018**A and **1018**B which are aligned at the front and back of the earphone at different levels and straightly stand facing out at ninety degrees.

Therefore, the two speakers **1018**A and **1018**B are straightly arranged at the front and back of the earphone with different center axis lines **1018**AX and **1018**BX, respectively, with an axis level difference of width **1088**B. The width number of **1088**B is the distance between **1018**AX and **1018**BX. Through many experiments, the width number of **1088**B has been found to produce better 3D stereo sound effects when it is in the range between one mm and three mm.

With the width **1088**B, the stereo sound output **1018**AW and **1018**BW of the speakers are at different axis lines **1018**AX and **1018**BX, respectively, with different wave rates and shapes. It is very critical to control those sound waves and shapes mixed together into a user's ear for better 3D stereo sound effects that are much closer to the original stereo music.

The depth **1086**A is affected by the width **1088**B and the different shapes/shock rates of the sound waves **1018**AW and **1018**BW. As a result, the depth **1086**A determines the Z axis depth development of 3D stereo sound of the front and back speakers **1018**A and **1018**B straightly arranged at the different axes lines **1018**AX and **1018**BX, respectively, for X-Y-Z axes 3D stereo sound effects.

The front sound effect unit **1032**, the front sound resonance effect unit **1036/1036**A, the back cover **1006**B, the back sound resonance effect unit **1036**B, and the back sound effect unit **1032**B/**1016**B all have uneven and different shapes.

Those units **1032**, **1032**B, **1036**/**1036**A, **1036**B, **1016**B, and **1006**B all work with the width **1088**B of the different axis line positions of the speakers **1018**A and **1018**B for better 3D stereo sound effects. Through the special configuration unit **1080**/**1080**A, the sound waves **1018**AW and **1018**BW with different wave axis lines **1018**AX and **1018**BX work inside those units **1032**, **1032**B, **1036**/**1036**A, **1036**B, **1016**B, and **1006**B and with the width **1088**B to bounce, mix, and balance sound effects for better X-Y-Z 3D stereo sound effects into a user's ear.

The shape, location, function, size, material, and method of those units or features **1018**AX, **1018**BX, **1088**B, **1032**, **1032**B, **1036**/**1036**A, **1036**B, **1016**B, and **1006**B may vary if needed to apply to the various embodiments shown in FIGS. **1** to **19**.

FIG. **5** shows different sound wave lines G and H caused by earphones having different widths **1088**B for the embodiment of earphone shown in FIG. **4** with speakers straightly arranged at different center axis lines. The Line G is a sound wave line when the width **1088**B is kept at a distance of between 1 mm and 3 mm. The sound output volume of the Line G is very high and strong. The sound wave change line of the Line G is very natural and balanced. The Line H is a sound wave line when the width **1088**B is kept bigger than 3 mm. The sound output volume of the Line H is smaller and weaker. The sound wave change line of the Line H is not very natural and balanced. Obviously, the Line G sound output is much better than the Line H sound output for X-Y-Z 3D stereo sound effects.

Of course, the speakers that are straightly arranged at the different center axis lines **1018**AX and **1018**BX may have the width **1088**B be varied due to different sizes and types of speakers in order to achieve different sound output stereo X-Y-Z 3D effects as the original stereo music requires.

FIG. **6** shows an embodiment of earphone according to the invention that has a center speaker unit containing two speakers **1018**A and **1018**B that are oriented at angles with respect to each other in an angle direction structure **1018**BB. One speaker **1018**A is located at the front of the speaker to handle high frequency of sound. Another speaker **1018**B is located at the back of the earphone to handle bass and middle frequencies of sound. The sound unit **1080**A directs the high sound into the first speaker **1018**A and directs the bass/middle frequencies of sounds into the second speaker **1018**B in order to achieve and best balance the 3D stereo sound effects. The back speaker **1018**B may be arranged at an angled position **1018**BB or in a vertical way (i.e. at an angle of ninety degrees). The angle direction or position of the back speaker **1018**B may be adjustable to achieve better 3D stereo sound delivery, especially for Z-axis deep sound effect. The speakers in the angled position **1018**BB work with the sound resonance area **1036** to create sound resonance and harmony. As the angle degree of angle position **1018**BB is larger, preferably at an angle of twenty-five degrees, the sound bass resonance and harmony of the speaker unit **1018** will be stronger in a Z-axis deep sense.

When the speaker driver **1018**B is oriented at a vertical angle (90°) with respect to speaker **1018**A, there may be a sound effect unit **1032** and a sound resonator **1036** to work with that structure for other kinds of better 3D stereo sound effects.

Sound wave movement is bounce-able. When the speaker driver **1018**B has the angled structure **1018**BB, the sound from the speaker driver **1018**B will be hit and bounced back within the sound effect unit **1032** and the resonator **1036** to cause sound shock waves for better 3D X-Y-Z stereo sound output for full-scaled sound frequencies, especially, bass sound and middle sound in a Z axis deep sense because the back speaker **1018**B outputs stronger sounds from the back side to front side.

The speakers having the angled structure **1018**BB work with the resonator **1036**, which is designed with a special structure **1036**A for an effect of inside sound resonance and an effect of outside wearing comfort. The outside specially-designed structure **1036**A has an upwardly-curved shape for human ear wearing comfort. In other words, the unit **1036**A has two functions: one for an inside sound effect of stereo resonance working with the angled orientation **1018**BB of the speakers, another one for providing comfort to the ear of the person wearing the earphone.

This method not only creates better sound 3D stereo output, but also creates a better shape and structure of the speaker cup unit **1006** for a user to put the earphone **1000** into his ear in a comfortable and stable manner.

Sound wave movement is naturally absorbed by gravity, from bass sound frequency first, to middle sound frequency, and then to high sound frequency. When the speaker cup unit **1006** is adjusted in a 3D direction by using the female unit **1016**C together with the adjustable ear band units **1038**, **1008**, **1012**, and **1014** (referenced in FIG. **1**), the angle function **1018**BB angle degree is changed accordingly due to the differing effects of gravity. Therefore, the 3D stereo sound direction and output of the earphone **1000** can be changed by self adjustment of the user for better stereo effect, hearing safety, and wearing comfort.

The design, size, shape, function, location, and material of the angle unit **1018**BB may vary if needed to apply into the various embodiments shown in FIGS. **1** to **19**.

FIG. **7** and FIG. **7**A show that the center speaker unit **1018** contains two speakers **1018**A and **1018**B. One speaker **1018**A is designed to handle high frequency of sound. Another speaker **1018**B is designed to handle bass and middle frequencies of sound. The sound controller **1080** directs the high sound into the first speaker **1018**A and directs the bass/middle frequencies of sounds into the second speaker **1018**B in order to achieve and best balance the stereo sound effects.

When the center speaker unit **1018** contains one, two, three, or more speakers, the sound controller **1080** analyzes and manages all sound levels and frequencies and directs them to the appropriate speakers for the best 3D adjustable stereo sound effects.

The material, design, form, shape, size, type, structure, and function of all speaker units and speakers **1018**, **1018**A, and **1018**C may vary.

There are left and right earphone pieces of earphone **1000**. Each earphone piece has a speaker cup unit **1006** containing one sound controller **1080** and two speakers **1018**A and **1018**B. Accordingly, there are in total two sound controllers **1080**, two speakers **1018**A, and two speakers **1018**B within one earphone **1000** to create true 3D stereo sound effects.

The sound controller **1080** and sound unit **1080**A may be combined into one piece or different pieces. The size, design, method, system, location, and material of the sound controller **1080** and sound unit **1080**A may vary.

The computerized sound controller **1080** which can control waves, levels, and frequency in ear speaker cup unit **1006** containing speaker center unit **1018** also detects and analyzes the direction changes of speaker unit **1018** or speaker cup unit **1006** or earphone **1000** and then automatically adjusts the sound direction/stereo output effects of speaker unit **1018**.

The size, design, shape, method of operation, location and material of the computerized sound controller **1080** may vary.

A front cover/sound output unit **1020** of the speaker cup unit **1006** covers the speaker unit **1018** and delivers the

sounds for an On-Ear sound output. The front cover unit **1020** contains the sound flow holes and sound isolation and noise filter made of any suitable soft stretchable material, for example, fabric, leather, soft plastic, rubber or a sponge material. Many layers may be applied onto noise filter unit of front cover unit **1020** for sound isolation and noise filtering. Front cover unit **1020** may contain many small holes to deliver the sounds and filter the noise. The noise filter maximizes blocking out of noise, minimizes ambient sounds, and creates a better stereo field between the closed ear cup unit **1006** and a user's ear.

The noise filter unit of front cover unit **1020** has sufficient elasticity to accommodate the 3D movement and 3D rotation of center speaker unit **1018** and the speaker cup unit **1006**.

The unit **1020** and ear speaker cup unit **1006** are preferably covered with a soft material to create a soft and warm touch when in contact with a wearer's ears as a closed ear cup. Ear cup unit **1006** and unit **1020** are preferably provided with high quality materials for excellent wearing comfort.

Unit **1020** and ear cup unit **1006** may be designed in an earphone style designed to cover the entire ear, in a partial ear-covering earphone style, or in an ear tunnel covered ear snug style.

A high speech clarity and voice recognition can be achieved by adjusting the sound stereo angle of adjustable speaker unit **1018** and sound stereo cover and filter unit **1020** for reducing sound reflection and mix in a user's ear.

The design, size, location, function, shape, and material of the unit **1020** may vary.

The 3D stereo ear speaker system **1000** and all related units shown in the various embodiments of FIGS. **1-19** may also be used in any headset, headphone, ear-snug set, or hearing aid device.

FIG. **8** shows one embodiment of earphone with the center speaker unit **1018** containing two speakers **1018**A and **1018**B oriented at angles with respect to each other in an angle direction structure **1018**BB and with focus-ear sound output unit **1020**A/AA. One speaker **1018**A is located at the front of the speaker to handle high frequency of sound. Another speaker **1018**B is located at the back of the cup to handle bass/middle frequencies of sound. The sound unit **1080**A directs the high sound into the first speaker **1018**A and directs the bass/middle frequencies of sounds into the second speaker **1018**B in order to achieve and best balance the 3D stereo sound effects. The back speaker **1018**B can be arranged with the angled position **1018**BB. The angle direction or position can be adjustable to achieve the best sound delivery. The speakers in this angled position **1018**BB work with the sound resonant area **1036** to create sound resonance and harmony. As the angle degree of angle position **1018**BB is larger, preferably at an angle of twenty-five degrees, the sound bass resonance and harmony of the speaker unit **1018** will be stronger in a Z-axis deep sense.

The focus-ear sound output units **1020**A, **1020**AA, and **1020**AAA, shown more clearly in FIG. **9**, may have a duck mouth style, an open speaker style, a speaker tunnel style, a straight style, or a curved style for 3D stereo sound output into a user's ear with clear stereo sounds and for comfortable wearing.

The design, size, location, function, shape, and material of the focus-ear sound output units **1020**A, **1020**AA, and **1020**AAA may vary.

The method of operation, size, design, shape, location, material and style of two speaker units **1018**A and **1018**B, the angle function **1018**BB, the sound resonator **1036**, the special structure **1036**A, and the front cover unit **1020** containing the units **1020**A, **1020**AA and **1020**AAA may vary.

FIG. **10** shows the sound results of the embodiment shown in FIG. **8**. When an earphone according to the embodiment in FIG. **8** has an angle **1018**BB inside the area of sound resonator **1036** of twenty-five degrees, the combined bass sound of speaker drivers **1018**A and **1018**B will be at line A. When the angle **1018**BB is forty-five degrees, the combined bass sound of speaker drivers **1018**A and **1018**B will be at line B. In that case, the angle **1018**BB is bigger and the bass sound output is stronger, especially for Z-axis depth.

The curved structure **1036**A should be related to the inside effect of stereo sound output quality and to the outside effect of wearing comfort of the earphone **1000**.

A front cover unit **1020** of the speaker cup unit **1006** covers the speaker unit **1018** and delivers the sounds as output sounds. The front cover unit **1020** contains the sound flow unit **1020**A. The sound flow unit **1020**A has one big output mouth **1020**AA and several small holes **1020**AAA. Those units focus an Onto-Ear sound output. The output mouth **1020**AA is designed to deliver and focus sounds, mostly the bass sound. The small hole unit **1020**AAA is designed to deliver and focus middle and high frequency sounds mostly onto the ear tunnel. As the output unit **1020**AA is longer, the bass sound will be stronger. If the output unit **1020**AAA has more holes, the high and middle sounds will be higher and clearer. Of course, the units **1020**AA and **1020**AAA can be switched and replace each other or can be switched with any other kind of sound output method.

FIG. **11** shows sound results from an example of the style of earphone shown in FIG. **9**. When the small hole unit **1020**AAA of the style of earphone shown in FIGS. **8** and **9** has 6-10 small holes with an approximately 0.5 mm diameter for each hole, the sound output of combined speaker drivers **1018**A and **1018**B is at line B. When the output unit **1020**AA is with no hole unit **1020**AAA, the sound output of combined speaker drivers **1018**A and **1018**B will be at line C. In that case, with fewer or smaller holes **1020**AAA, the bass sound will be much stronger. If the earphone has more or bigger holes **1020**AAA, the sound output will be much clearer at high/middle frequency ranges.

The output unit **1020**A with an Onto-Ear style is removable and replaceable for different unit sizes for different human ears, and is exchangeable with other cover/output designs, such as the On-Ear style unit **1020** in the embodiment shown in FIG. **7**, and the In-Ear style unit **1020**B in the embodiments shown in FIGS. **1** to **6**.

FIGS. **12** and **12**A show another embodiment of the speaker unit **1018** containing three speakers **1018**A, **1018**B, and **1018**C and sound controller **1080**. Preferably, one speaker **1018**A is a sound driver handling high frequency mostly. Another speaker **1018**B handles bass frequency of sound mostly. The third speaker **1018**C handles middle frequency range of sound mostly. Those three speakers work together to deliver stereo sounds matching the detailed original stereo digital sound tracks.

Sound controller **1080** containing sound unit **1080**A receives all sound signals from the original sound tracks and then analyzes and directs those original sound tracks into different sound channels for those three speakers **1018**A, **1018**B, and **1018**C. Sound unit **1080**A may have a capacitor unit containing one or more capacitors and related wires or other related electric units.

Inside speaker cup unit **1006** are a sound check member or piece **1032** and other sound check members or pieces to create a sound resonance area **1036** within ear cup unit **1006**.

The arrangement, size, design, shape, material, method, location, and combination of the units **1018**A, **1018**B, and

1018C may vary if needed to apply to the various embodiments shown in FIGS. **1** to **19**.

FIG. **13** shows in greater detail an embodiment of the style of earphone shown in FIG. **12** and FIG. **12**A in In-Ear Earphone structure with different arrangement of the triple sound drivers. This embodiment includes the triple sound drivers unit of speakers **1018**A, **1018**B, and **10180** and sound controller **1080** which are shown in a top view of earphone **1000**. There are three speakers (sound drivers) **1018**A, **1018**B, and **1018**C inside the ear cup **1006**. In order to form the front and back straight array unit with three speakers (triple sound drivers), two speakers **1018**A and **1018**C are located at the front of the ear cup **1006** with one to handle high frequency and another speaker to handle middle frequency of sound separately and independently. Another speaker **1018**B is located at the back of the ear cup **1006** to handle bass frequency of sound. In a reversed way, the speakers **1018**A and **1018**C may instead handle bass and middle sounds independently and the other speaker **1018**B may handle a high frequency of sound. In a third alternative, the speakers **1018**A and **1018**C may both handle high sound only and the speaker **1018**B may handle bass and middle frequencies of sound. There are many possible sound frequency combinations of those three speakers in a straight arrangement at the front and the back of the structure.

The position/location and size/shape changes of one, two, or more of speakers **1018**A, **1018**B, and **1018**C working with sound units **1080**/**1080**A and sound effect units **1032** and **1036** can create different 3D stereo sound effects. For example, the speakers **1018**A, **1018**B, and **1018**C can be arranged with two in front and one in back inside the speaker cup unit **1006**. It is possible to have two front speakers in small sizes and one back speaker in a large size, or one front speaker in a small size, one front speaker in a medium size, and one back speaker in a large size, or three front speakers all of the same or different small/medium sizes, etc.

The small high definition drivers **1018**A and **1018**C are directly arranged in the front side and the large high efficiency driver **1018**B is straightly arranged in the back side of the small driver **1018**A with a specially-designed frequency configuration unit **1080**/**1080**A for very strong sound stereo bass and sympathetic response. Each speaker (sound drivers **1018**A, **1018**B, and **1018**C) handles each level of sound frequency for bass (low), middle and high sounds. Therefore, the triple speakers **1018**A, **1018**B, and **1018**C straightly arranged create a stage-like real sound delivery system in X-Y-Z three dimensional (3D) sound stereo space because the triple speakers **1018**A, **1018**B, and **1018**C explore stereo sounds in X-Y axes senses in a wide horizontal way, plus, at the same time, the large speaker **1018**B delivers very strong sounds, preferable bass frequency, from the back to have a Z-Axis stereo sound in a deep vertical way for X-Y-Z axes 3D stereo surrounding sound effects with bass/mid/high sound frequencies.

Therefore, a listener can hear a strong bass sound from deep back to near front in a powerful sound wave with a Z-axis sense. At the same time, the listener can hear real stereo sounds with X-Y axes in very detailed crystal-clear sound from front, from left, from right, from back, from everywhere the stereo music is destined to play in three dimensions (3D).

The design, function, shape, form, size, structure, location, and material of the triple drivers of this front/back straight array unit of back large speaker **1018**B and front small speakers **1018**A and **1018**C may vary.

Of course, the triple speakers unit works with or as part of all functions and methods and units explained in all the various embodiments shown in FIGS. **1** to **19**. The triple speakers unit may contain more than three sound drivers.

FIG. **14** shows another embodiment of an earphone **1000** that provides a three-dimensionally adjustable 3D stereo sound output direction/effect and that can be worn comfortably. The sound output unit **1020** of this earphone. **1000** has a 3D sound effect and output direction-adjustable unit **1020**C that can be adjusted to have an angled axis line **1088**C. Direction adjustable unit **1020**C works with speakers **1018**A and **1018**B which share the same center axis line **1088**. The direction-adjustable unit **1020**C performs three basic functions at the same time to achieve a special sound environment from the sound sources **1018**A and **1018**B, to the sound effect area **1032** and resonance areas **1036**/**1036**A, and to the output unit **1020** into a user's ear tunnel directly, closely, and adjustably. The first function is to focus the sound effect and deliver the 3D stereo sounds generated from the speaker unit containing two or three multiple drivers **1018**A, **1018**B, and **10180** into a user's ear tunnel directly and closely. The second function is to work all sound waves and effects. The third function is to provide adjustability in three-dimensional directions X-Y-Z and rotationally over 360 degrees as the arrows indicate. In the third way, the In-Ear sound output unit **1020** is adjustable to provide sound output direction adjustability/changeability and fit in a user's ear tunnel fully, tightly, and more comfortably.

There are some adjustable steps within the adjustable unit **1020**C. The adjustable unit **1020**C may use any kind of adjustable, bendable, moveable, or stretchable method, structure, and material that provides adjustability, an ability to bend, or an ability to stretch.

Of course, it should be very carefully considered that the sound output adjustable unit **1020**C will have an effect on sound delivery when bent or adjusted to create a sound delivery axis changed line **10880** from the 3D stereo sound waves **1018**AW and **1018**BW of the multiple speakers **1018**A and **1018**B. The angled axis line **1088**C for sound delivery and effect and the sound waves **1018**AW and **1018**BW all work synchronously together inside the sound output unit **1020**C for 3D stereo sound effects/outputs in X-Y-Z 3D stereo sound space with bass/mid/high sound frequencies. Furthermore, the angled axis line **1088**C for sound delivery and effect of the sound output and 3D adjustable unit **1020**C will extend the axis line **1088**CB into the sound effect units **1032** and **1032**B/**1016**B and into the sound resonance units **1036**/**1036**A and **1036**B. The axis line **1088**CB works with the sound waves **1018**AW, **1018**BW, **1018**ABW, and **1018**BBW to create multiple sound effects in X-Y-Z 3D dimensions with bass/mid./high sound frequencies. Therefore, 3D direction adjustable unit **1020**C works with multiple sound effects combined sound axis lines **1088**C and **1088**CB together at the same time. This kind of sound output effect change has a good aspect in that a user can adjust the sound output unit **1020** to achieve the sound 3D stereo effects he or she likes and to achieve wearing comfort also at the same time.

The design, size, location, function, shape, and material of the sound direction adjustable unit **1020**C may vary if needed to apply to the various embodiments shown in FIGS. **1** to **19**.

FIG. **15** shows another embodiment of earphone having multiple speakers for 3D stereo sound effects and having adjustable sound directions of the earphone **1000**. In this embodiment, there are three speakers (sound drivers) **1018**A, **1018**B, and **1018**C inside the ear cup **1006**. In order to arrange these three speakers (triple sound drivers) in a front and back straight array, two speakers **1018**A and **1018**C are located at the front of the ear cup **1006** with one speaker to handle high frequency and another speaker to handle middle frequency of

sound separately and independently. Another speaker **1018**B is located at the back of the ear cup **1006** to handle bass frequency of sound. In a reversed way, the speakers **1018**A and **1018**C could handle bass and middle sounds independently and the other speaker **1018**B could handle high frequency of sound. In a third alternative, the speakers **1018**A and **1018**C could both handle high sound only and the speaker **1018**B could handle bass and middle sound frequencies. There are many possible sound frequency and driver position combinations for those three speakers having a straight arrangement at the front and the back or at a side structure of the ear cup or earphone.

The size arrangement of the speakers **1018**A, **1018**B, and **1018**C is preferably two small sound drivers at the front of the ear cup or earphone and one large sound driver at the back of the ear cup or earphone. They could, however, all have the same size or there could be one large at the front and two small at the back, etc., if needed.

The small high definition drivers **1018**A and **1018**C are directly arranged in the front side of the earphone and the large high efficiency driver **1018**B is straightly arranged in the back side of the small driver **1018**A with a specially-designed frequency configuration unit **1080**/**1080**A for very strong sound stereo bass and sympathetic response. Each speaker of sound drivers **1018**A, **1018**B, and **1018**C handles each level of sound frequency for bass (low), middle and high sounds. Therefore, the triple speakers **1018**A, **1018**B, and **1018**C in a straight arrangement creates a stage-like real sound delivery system in X-Y-Z three-dimensional (3D) sound stereo space because the triple speakers **1018**A, **1018**B, and **1018**C explore stereo sounds in two dimensions (X-Y axes senses) in a wide horizontal way, plus, at the same time, the large speaker **1018**B delivers very strong sounds, preferable bass frequency, from the back to have a Z-Axis stereo sound in a deep vertical way for X-Y-Z 3D stereo surrounding sound effects with bass/mid/high sound frequencies.

At the same time, there are speaker direction change units **1008**A, **1008**B, and **1008**C connected to the related speakers **1018**A, **1018**B, and **1018**C, respectively. Those speaker direction change units **1008**A, **1008**B, and **1008**C can separately and independently adjust the positions and directions of speakers **1018**A, **1018**B, and **1018**C, respectively, with turns along the X-Y axes and with pushing in or out for Z-axis movements to achieve the adjustments in X-Y-Z three dimensions synchronously. At the same time, those speaker direction change units **1008**A, **1008**B, and **1008**C can also adjust the 3D stereo sound effects in X-Y-Z 3D stereo sound space. Each speaker **1018**A, **1018**B, or **1018**C has its own respective speaker direction/position change unit **1008**A, **1008**B, or **10080**. There are many synchronous combinations of sound direction adjustments and sound 3D stereo effects that could result from those speakers **1018**A, **1018**B, and **1018**C and their change units **1008**A, **1008**B, and **1008**C working with the sound configuration unit **1080**, sound effect units **1032** and **1034**, and sound resonator **1036**.

Therefore, a listener can hear a strong bass sound from far back and can hear real stereo sounds in the X, Y, and Z axes in very detailed crystal-clear sound from front, from left, from right, and from back in a three dimensional sound space. At the same time, a user can adjust the 3D stereo sound direction and space for the 3D sound stereo effects and 3D sound direction changes for comfort, music creation, music playing, listening, and wearing he or she likes.

The speaker direction change units **1008**A, **1008**B, and **1008**C contain their own related male/female joint parts and handlers for movements along each of the X, Y, and Z axes. The design, function, shape, joint form, size, type, structure, location, material, and parts of the speaker direction/position change units **1008**A, **1008**B, and **1008**C may vary. The speaker unit can be just one speaker to multiple speakers if needed. Of course, the speaker direction change units **1008**A, **1008**B, and **1008**C may work with or for all functions, methods, and units and all types of earphones and headphones shown in the various FIGS. **1** to **19**. There is an ear band holder unit **1002** and an earcup, adjustable unit **1004**.

The earphone **1000** in this embodiment may contain one speaker to multiple speakers and one speaker change unit to multiple speaker change units accordingly.

Generally speaking, for all of the embodiments shown above in FIGS. **1** to **15**, the earphone **1000** achieves the three basic considerations of In-Ear earphones: small size, real stereo sound quality with bass/middle/high sound frequencies, and wearing/hearing comfort, and the earphone **1000** meets these three considerations within a very small, closed, and isolated sound space, output environment, and structure.

All units and functions and structures explained above and shown in FIGS. **1** to **19** may be used, applied, or inter-exchanged in any figure of this application for all types of earphones and headphones if needed.

FIGS. **16**, **17**, **18**, and **19** show another embodiment of wireless earphone **2000**. The wireless earphone **2000** contains the ear band unit **1038**, speaker adjustable hold units **1008**, a roller/ball unit **1010**, the ball unit **1012**, the socket units **1014** and **1016**, the speaker cup unit **1006**, the speaker units **1018**A and **1018**B (and may also have a third speaker **1018**C), the sound controller **1080**/**1080**A, the sound effect unit **1032**, the sound resonator **1036**/**1036**A, and the speaker output units **1020** and **1020**B, **1020**BB, and **1020**BBB. Those units are all similar to the units showed and discussed in all previous figures from **1** to **15**.

The wireless earphone **2000** also contains a wireless carrier unit **2060**. This carrier unit **2060** is similar to an extension or enlargement of the speaker adjustable holder unit **1008**. There may be a male unit **1010** for adjustability in the X, Y, and Z axes attached to the carrier unit **2060** to work adjustably with the ear holder unit **1038** through a hole or socket female unit **1014**. The unit **1014** may be designed as a big C style. At the same time, there is an X-Y-Z 3D rotatable male unit **1012** attached to the carrier unit **2060** to work adjustably with the speaker cup unit **1006** through a socket/female unit **1016**.

The carrier unit **2060** may contain a switch unit **2062**, a light indicator unit **2064**, voice control units **2066**A and **2066**B, microphone units **2068**A and **2068**B. The switch unit **2062** may have many functions, such as allowing the wireless carrier unit **2060** to be turned on and off, controlling the wireless connection to a cell phone, switching between music and talk, controlling voice function, and controlling many additional cell phone functions. The light indicator unit **2064** shows the wireless connection status, power level indication, power recharge indication, on-and-off indications, and talk-and-music indication. The voice control unit **2066**A may add to the voice volume and unit **2066**B may reduce the voice volume. The location, design, and function of the units **2066**A and **2066**B may be switched with each other. The control units **2066**A and **2066**B may be used to control the contents, such as songs, for forward or backward playing or for jumping to the beginning or ending function also. The microphone units **2068**A and **2068**B allow a cellular phone talk function. The microphone units **2068**A and **2068**B may have background noise reduction and filter functions in order to produce a clear talking effect.

A mother board **2070** may be inside the carrier **2060**. There may also be a CPU unit **2072**, a memory unit **2074**, a battery unit **2076**, a wireless unit **2078**, and a USB connector unit

2096 inside the carrier unit **2060**. Additionally, there may be a Multiple Player Unit **2098** inside the carrier unit **2060**.

The size, design, shape, material, location, function, and method of the carrier unit **2060**, the switch unit **2062**, the indicator unit **2064**, the voice control units **2066**A and **2066**B, the microphone units **2068**A and **2068**B, the mother board unit **2070**, the CPU unit **2072**, the memory unit **2074**, the battery unit **2076**, the wireless unit **2078**, the antenna unit **2078**A, the USB connector unit **2096**, and the MP unit **2098** may vary if necessary. The microphone units **2068**A and **2068**B may be exchangeable, may be adjustable in angle or length, may be removable, and may be extendable. The wireless unit **2078** may contain an antenna unit **2078**A and may work with Bluetooth, Wi-Fi, 2.4G, 3G, 4G, or any other kind of wireless communication system or method.

The wireless earphone **2000** may have all or some of the units of embodiments shown in FIGS. **1** to **15** if needed, for example, the speaker cup unit **1006** containing one, two, or three speaker drivers **1018**A, **1018**B, and **1018**C for X-Y-Z axes 3D stereo sound effects with bass/mid/high sound frequencies. At the same time, the wireless earphone **2000** may have the output unit **1020** containing On-Ear unit **1020**, Onto-Ear units **1020**A, **1020**AA, and **1020**AAA, or In-Ear units **1020**B, **1020**BB, and **1020**BBB.

The roller unit **1010** contains a male roller **1010**A to work with the female hole **1014** in order to achieve an X-axis rotation of the speaker holder unit **1008**. There is a screw **1010**B to go through a hole **1010**C of the speaker holder unit **1008** and go through a hole **1010**D of the male roller **1010**A to achieve Z and Y axis rotations of the speaker holder unit **1008**. So, the roller unit **1010** actually achieves X-axis rotation, Y-axis rotation, and Z-axis rotation of the speaker holder unit **1008** at the same time.

The ball/male unit **1012** contains a ball **1012**A and ball stick **1012**B and a screw **1012**C. The ball stick **1012**B is to hold the ball **1012**A. The screw **1012**C is to go through a hole **1012**D of the speaker holder unit **1008** to screw into the stick **1012**B in order to hold the ball **1012**A with the speaker holder unit **1008** together. The ball **1012**A is to work with the ball socket/female unit **1016** of the speaker cup unit **1006** to achieve 3D rotatable function of the speaker cup unit **1006** containing the center speaker unit **1018**.

The socket unit **1016** contains a ball-movement friction control unit **1016**A to achieve the movement smooth and stable of the ball **1012**A.

FIG. **19** shows the wireless earphone as a set of units **2060** and **2090**. The unit **2060** is a main unit containing all wireless parts. The unit **2090** is a carrier with an ear cup unit **1006** of the same type as the one in the carrier **2060**. The unit **2090** has a connector **2092**. There is a USB wire/connector unit **2094** to connect the connector unit **2092** of the unit **2090** to the connector unit **2096** of the carrier unit **2060**. Therefore, the whole set of the wireless earphone can be used for a pair of a user's ears for 3D adjustable stereo sound.

The USE wire connector units **2096** and **2092** may be used as a USB communication unit, as a battery recharger unit, or as a memory/multiple player unit.

There may be a multiple player unit **2098** and/or battery unit **2098**A inside the carrier unit **2090** which perform or performs additional play and/or energy functions. In that case, the carrier unit **2090** may have the same inside units as the carrier unit **2060**.

The carrier units **2060** and **2090** may be switched with each other for left or right ear users. The carrier unit **2060** may be separable and independent from the ear band unit **1038** through the roller/ball unit **1010** and hole or big C-style socket unit **1014**, or in other words, may be assembled or unassembled in this manner by the user. The roller/ball unit **1010** and the socket unit **1014** have some identical structures or steps to achieve separability and independence of functions or assembled or unassembled methods.

The carrier unit **2090** has the same separable and independent structure and function as the carrier unit **2060**. Therefore, a user can switch the carrier unit **2060** with the carrier **2090** easily and conveniently for left or right ear cell phone talking.

The carrier unit **2060** can be used as a single unit for cell phone talking with no connection to the carrier unit **2090**. The carrier unit **2090** may also be used as a multiple player unit to work with the carrier unit **2060** or without the carrier unit **2060**.

The size, design, shape, material, location, function, and method of the carrier unit **2060**, the carrier unit **2090**, the connector unit **2092**, the wire/USB connector unit **2094**, and the USB connector **2096**, and the multiple player unit **2098** may vary if necessary.

All units and functions and structures explained above and shown in FIGS. **1** to **19** may be used, applied, or inter-exchanged in any of the embodiments shown or described in this application.

The invention claimed is:

1. An earphone producing a three-dimensional stereo sound effect, the earphone comprising:

(a) an ear cup configured to fit within ear cartilage of an ear of a user and comprising a front portion, a back portion, a front sound effect unit disposed in said front portion, a front sound resonator disposed in said front portion, a back sound resonator disposed in said back portion, and a back sound effect unit disposed in said back portion;

(b) at least one front speaker disposed in said front portion of said ear cup;

(c) at least one back speaker disposed in said back portion of said ear cup;

(d) a sound controller disposed in said ear cup; and

(e) a sound output unit connected with said ear cup;

wherein sound waves from said at least one front speaker and from said at least one back speaker are mixed within said earphone before being delivered into the ear of the user;

wherein said at least one front speaker and said at least one back speaker work together to create stereo sound in a first dimension and in a second dimension; and

wherein one of said at least one front speaker and said at least one back speaker creates stereo sound in a third dimension.

2. The earphone according to claim **1**, further comprising:

a back joint unit disposed on said ear cup;

an adjustable holder unit connected with said back joint unit in a detachable manner; and

an adjustable ear band unit connected to said adjustable holder unit;

wherein said back joint unit and said back sound effect unit are formed together in one piece.

3. The earphone according to claim **1**, further comprising a sound balance hole unit disposed in said ear cup.

4. The earphone according to claim **1**, wherein a first center axis line of said at least one front speaker is parallel with a second center axis line of said at least one back speaker.

5. The earphone according to claim **4**, wherein said at least one front speaker and said at least one back speaker are each arranged perpendicular to a horizontal axis of said ear cup.

6. The earphone according to claim **1**, wherein said at least one front speaker and said at least one back speaker are oriented at an angle with respect to each other.

7. The earphone according to claim 6, wherein one of said at least one front speaker and said at least one back speaker is disposed perpendicular to a horizontal axis of said ear cup.

8. The earphone according to claim 1, wherein said at least one front speaker and said at least one back speaker share a center axis line.

9. The earphone according to claim 1, wherein said at least one front speaker has a first size and said at least one back speaker has a second size, said first size being greater than said second size.

10. The earphone according to claim 1, wherein said at least one front speaker has a first size and said at least one back speaker has a second size, said second size being greater than said first size.

11. The earphone according to claim 1, wherein said at least one front speaker has a first size and said at least one back speaker has a second size, said second size being equal to said first size.

12. The earphone according to claim 1, wherein said front sound effect unit comprises an outside sound effect unit and an inside sound effect unit separate from said outside sound effect unit.

13. The earphone according to claim 1, wherein said front sound effect unit comprises a front wall of said ear cup.

14. The earphone according to claim 1, wherein said front sound resonator comprises a side wall of said ear cup.

15. The earphone according to claim 14, wherein said front sound resonator has a curved shape for fitting onto a bowl-shaped ear of a user of said earphone.

16. The earphone according to claim 1, wherein said at least one front speaker comprises a first front speaker and a second front speaker.

17. The earphone according to claim 1, wherein said at least one back speaker comprises a first back speaker and a second back speaker.

18. The earphone according to claim 1, further comprising a wireless carrier unit, the wireless carrier unit comprising:

a circuit board, a wireless communication chip, a switch unit, a light indicator unit, at least one voice control unit, and a microphone unit.

19. The earphone according to claim 18, wherein said wireless carrier unit further comprises a CPU unit, a memory unit, a battery unit, a USB connector unit, and a Multiple Player Unit.

20. An in-ear earphone producing a three-dimensional stereo sound effect, the in-ear earphone comprising:

(a) an ear cup configured to fit within ear cartilage of an ear of a user and comprising a front portion, a back portion, a front sound effect unit disposed in said front portion, a front sound resonator disposed in said front portion, a back sound resonator disposed in said back portion, and a back sound effect unit disposed in said back portion;

(b) at least one front speaker disposed in said front portion of said ear cup, said at least one front speaker having a first center axis line;

(c) at least one back speaker disposed in said back portion of said ear cup, said at least one back speaker having a second center axis line;

(d) a sound controller disposed in said ear cup;

(e) a front sound output unit configured to fit in an ear tunnel of the ear of the user; and

(f) a first 3D direction adjustable unit connecting in a three-dimensional adjustable manner said front sound output unit with said front sound effect unit of said ear cup, so that said front sound output unit can be oriented at an angle to said first center axis line and to said second center axis line;

wherein sound waves from said at least one front speaker and from said at least one back speaker are mixed within said in-ear earphone before being delivered into the ear of the user;

wherein said at least one front speaker and said at least one back speaker work together to create stereo sound in a first dimension and in a second dimension; and

wherein one of said at least one front speaker and said at least one back speaker creates stereo sound in a third dimension.

21. The in-ear earphone according to claim 20, wherein said first center axis line and said second center axis line are co-extensive.

22. An earphone producing a three-dimensional stereo sound effect, the earphone comprising:

(a) an ear cup configured to fit within ear cartilage of an ear of a user and comprising a front portion, a back portion, a front sound effect unit disposed in said front portion, a front sound resonator disposed in said front portion, a back sound resonator disposed in said back portion, and a back sound effect unit disposed in said back portion;

(b) at least one front speaker disposed in said front portion of said ear cup;

(c) at least one back speaker disposed in said back portion of said ear cup;

(d) a sound controller disposed in said ear cup;

(e) a sound output unit connected with said ear cup; and

(f) at least one speaker direction change unit connected with at least one of said at least one front speaker and said at least one back speaker;

wherein sound waves from said at least one front speaker and from said at least one back speaker are mixed within said earphone before being delivered into the ear of the user;

wherein said at least one front speaker and said at least one back speaker work together to create stereo sound in a first dimension and in a second dimension; and

wherein one of said at least one front speaker and said at least one back speaker creates stereo sound in a third dimension.

23. The earphone according to claim 22, wherein said at least one front speaker comprises a first front speaker and a second front speaker; and

wherein said at least one speaker direction change unit comprises a first speaker direction change unit connected to said first front speaker, a second speaker direction change unit connected to said second front speaker, and a third speaker direction change unit connected to said at least one back speaker.

24. An earphone system producing a three-dimensional stereo sound effect, the earphone system comprising:

(a) an earphone comprising:

an ear cup configured to fit within ear cartilage of an ear of a user and comprising a front portion, a back portion, a front sound effect unit disposed in said front portion, a front sound resonator disposed in said front portion, a back sound resonator disposed in said back portion, and a back sound effect unit disposed in said back portion;

at least one front speaker disposed in said front portion of said ear cup;

at least one back speaker disposed in said back portion of said ear cup;

a sound controller disposed in said ear cup; and

a sound output unit connected with said ear cup;

(b) a wireless carrier unit, the wireless carrier unit comprising a circuit board, a wireless communication chip, a

switch unit, a light indicator unit, at least one voice control unit, a microphone unit, a CPU unit, a memory unit, a battery unit, a USB connector unit, and a Multiple Player Unit;

(c) a first back joint unit disposed on said ear cup, said first back joint unit comprising a female unit;

(d) a second joint unit disposed on said wireless carrier unit, said second joint unit comprising a male unit and being connected to said first back joint unit to link said ear cup with said wireless carrier unit in a three-dimensional adjustable manner;

(e) a third joint unit disposed on said wireless carrier unit, said third joint unit comprising a male unit;

(f) an ear holder unit; and

(g) an ear holder joint unit disposed on a bottom of said ear holder unit, said ear holder joint unit comprising a female unit and being connected to said third joint unit to link said wireless carrier unit with said ear holder unit in three-dimensional adjustable manner;

wherein sound waves from said at least one front speaker and from said at least one back speaker are mixed within said earphone before being delivered into the ear of the user;

wherein said at least one front speaker and said at least one back speaker work together to create stereo sound in a first dimension and in a second dimension; and

wherein one of said at least one front speaker and said at least one back speaker creates stereo sound in a third dimension.

* * * * *