US 20180316999A1

(19) United States

(12) Patent Application Publication

Bellas et al.

(10) Pub. No.: US 2018/0316999 A1

(43) Pub. Date: Nov. 1, 2018

(54) **HEADPHONE ATTACHMENT MECHANISM**

(71) Applicant: **Kimon Bellas**, Camarillo, CA (US)

(72) Inventors: **Kimon Bellas**, Camarillo, CA (US); **Alan Dwight Hulsebus, II**, Simi Valley, CA (US)

(73) Assignee: **Kimon Bellas**, Camarillo, CA (US)

(21) Appl. No.: **15/498,330**

(22) Filed: **Apr. 26, 2017**

Publication Classification

(51) **Int. Cl.**
H04R 1/10 (2006.01)

(52) **U.S. Cl.**
CPC ***H04R 1/1066*** (2013.01); ***H04R 1/105*** (2013.01); ***H04R 1/1008*** (2013.01)

(57) **ABSTRACT**

Devices and methods described herein relate to novel and improved headphone designs that can optimize component movement, efficiency, and/or performance. Headphone designs described herein allow components to freely move in many directions, which can provide users with an increased ability to optimize component positioning and/or performance. Additionally, headphone embodiments described herein can provide a novel manner to foster component adjustability, which also improves headphone efficiency and comfort. This component adjustability allows headphones to provide adjustable shapes and/or sizes, which helps to facilitate the transition to users of different sizes. Embodiments according to the present disclosure can also include headphones with removable components. For example, the headband can be removable from other headphone components. This can allow headphone components to be exchanged for similar components. In addition, removable individual components can provide headphone users with increased mobility and/or flexibility.

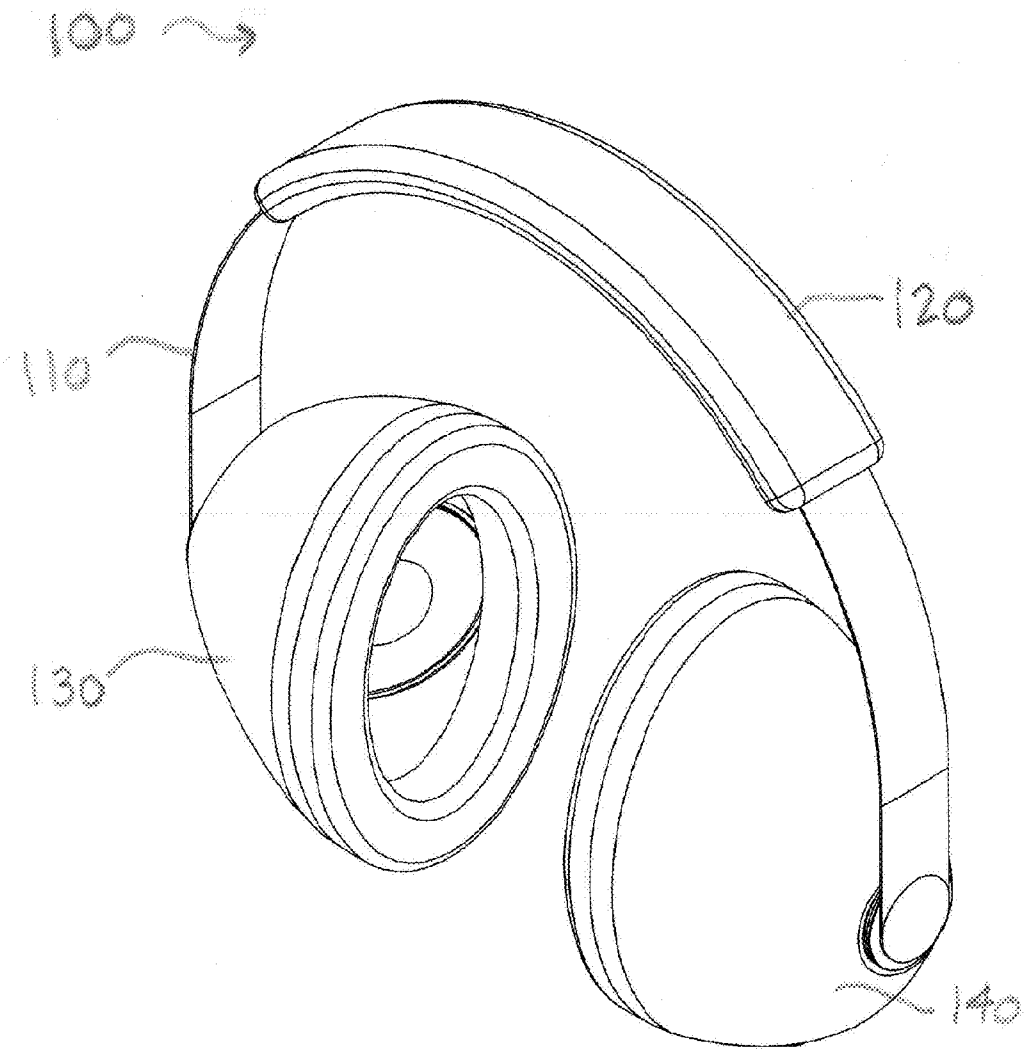

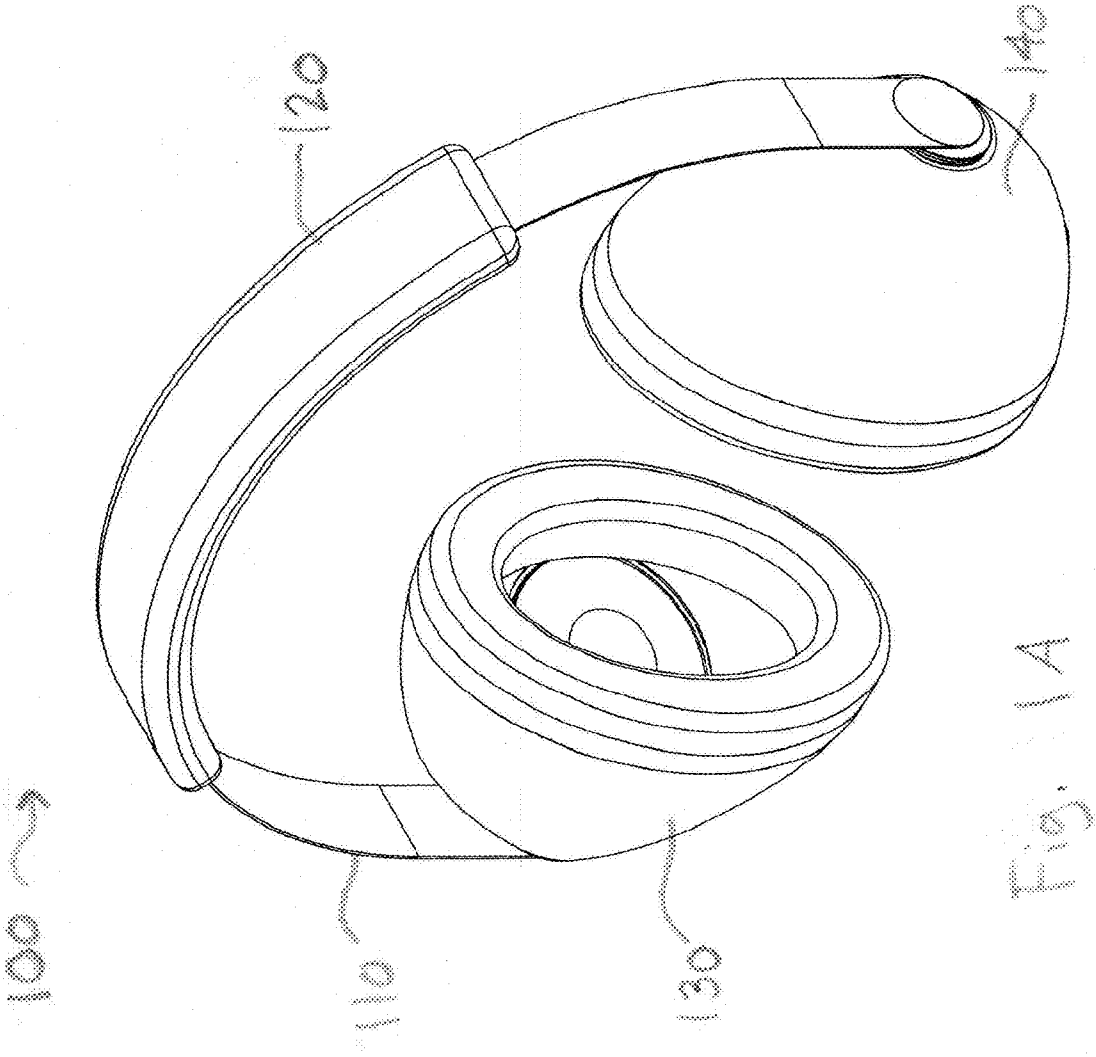

Fig. 1A

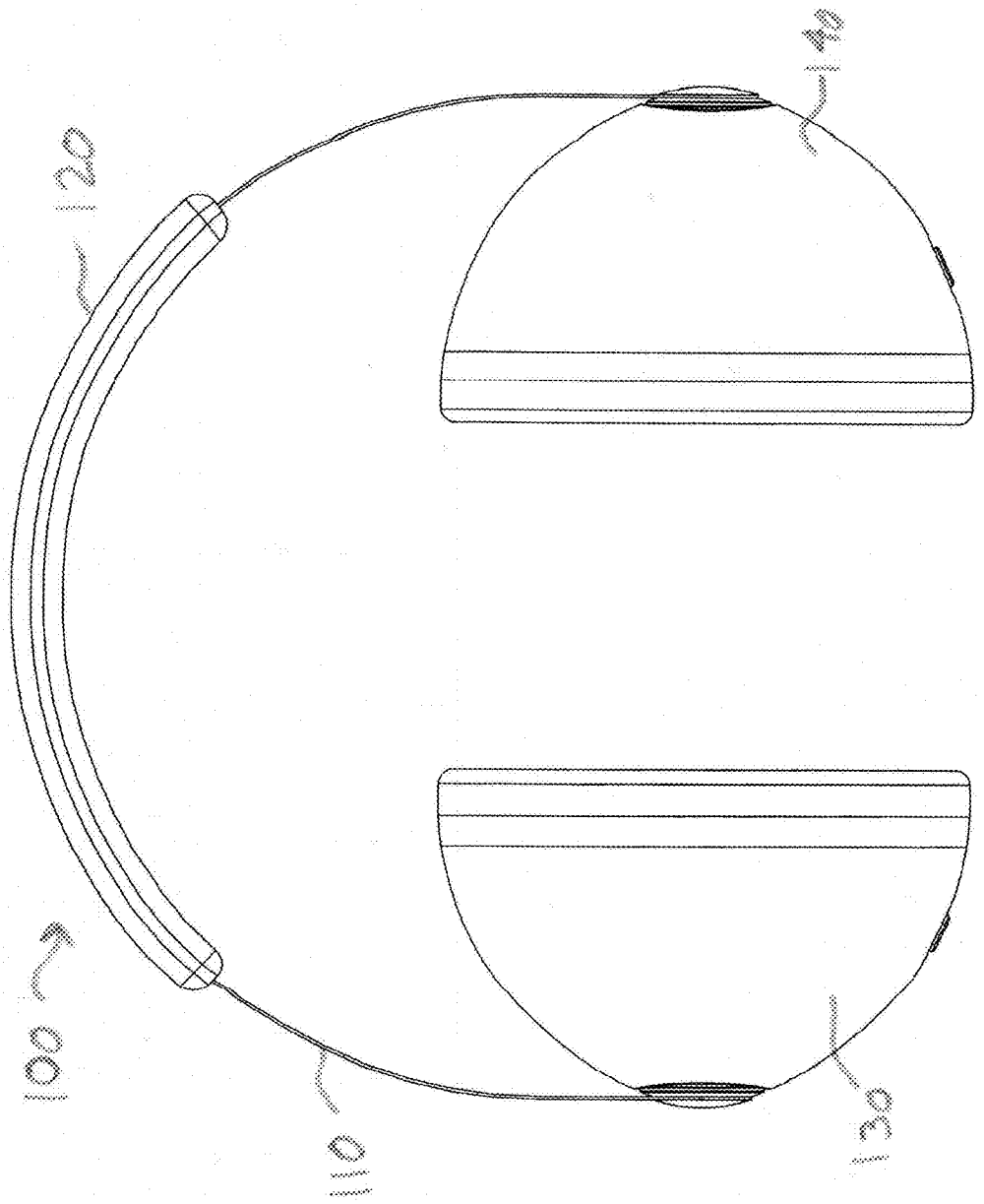

Fig. 1B

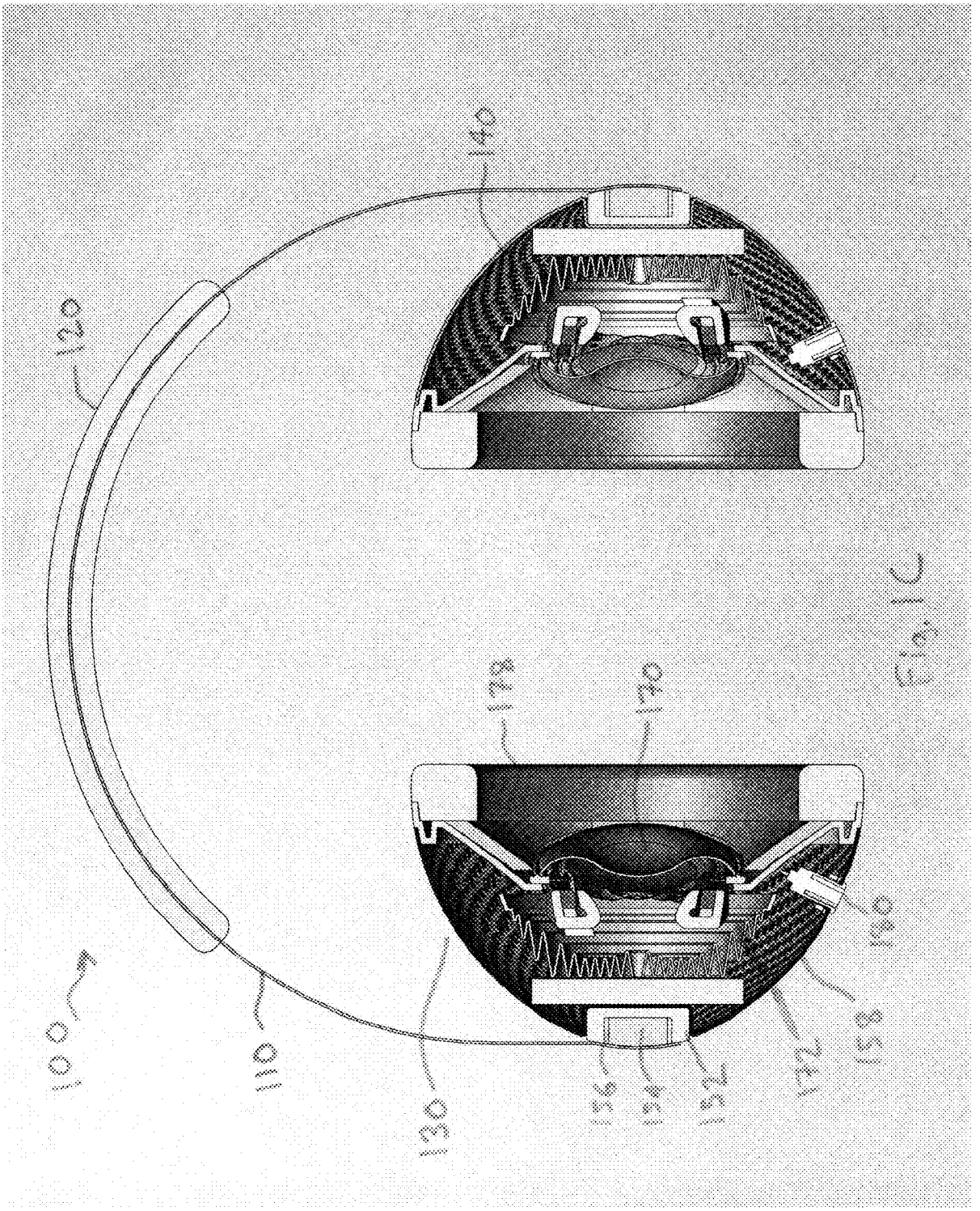

Fig. 1C

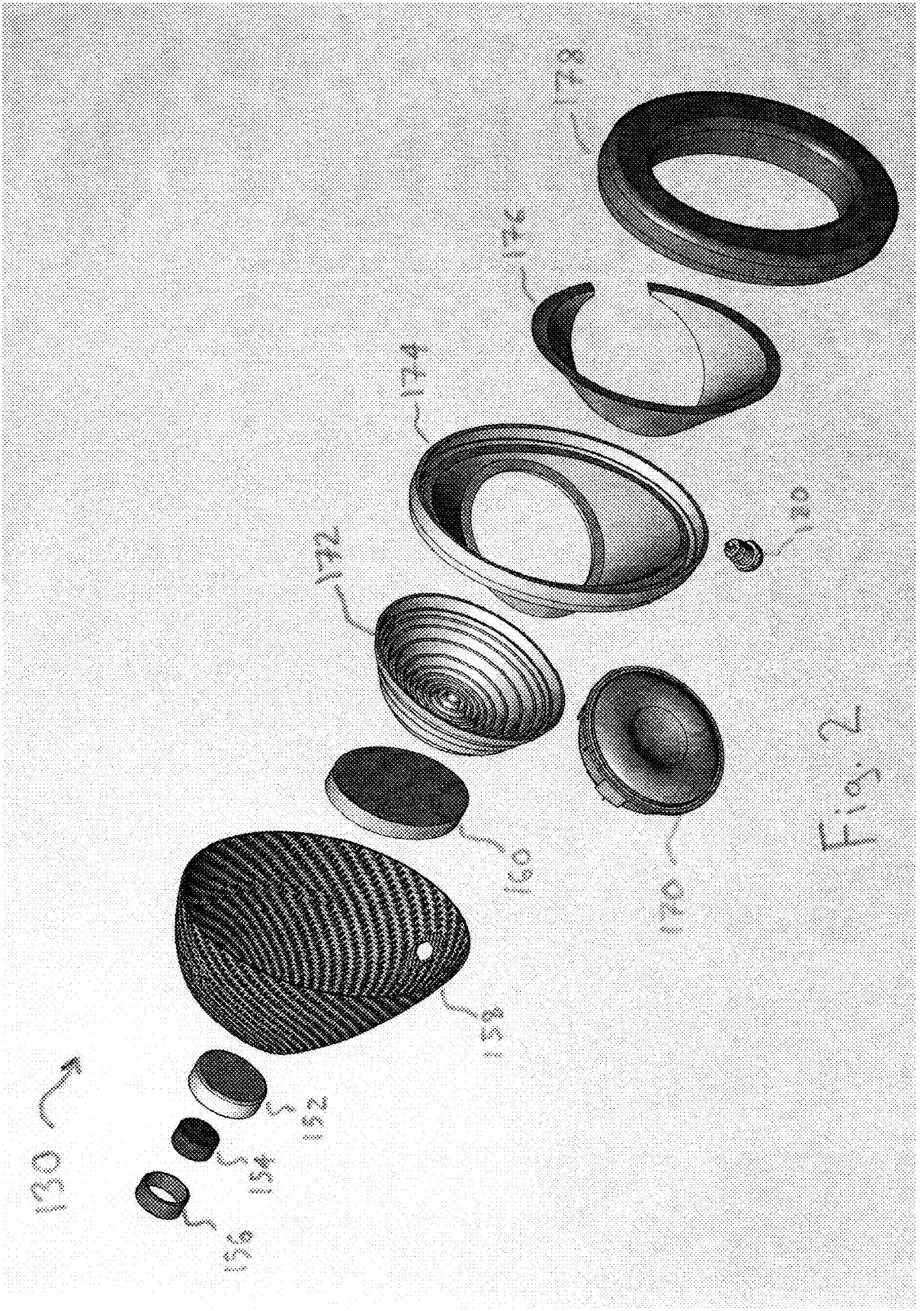

Fig. 2

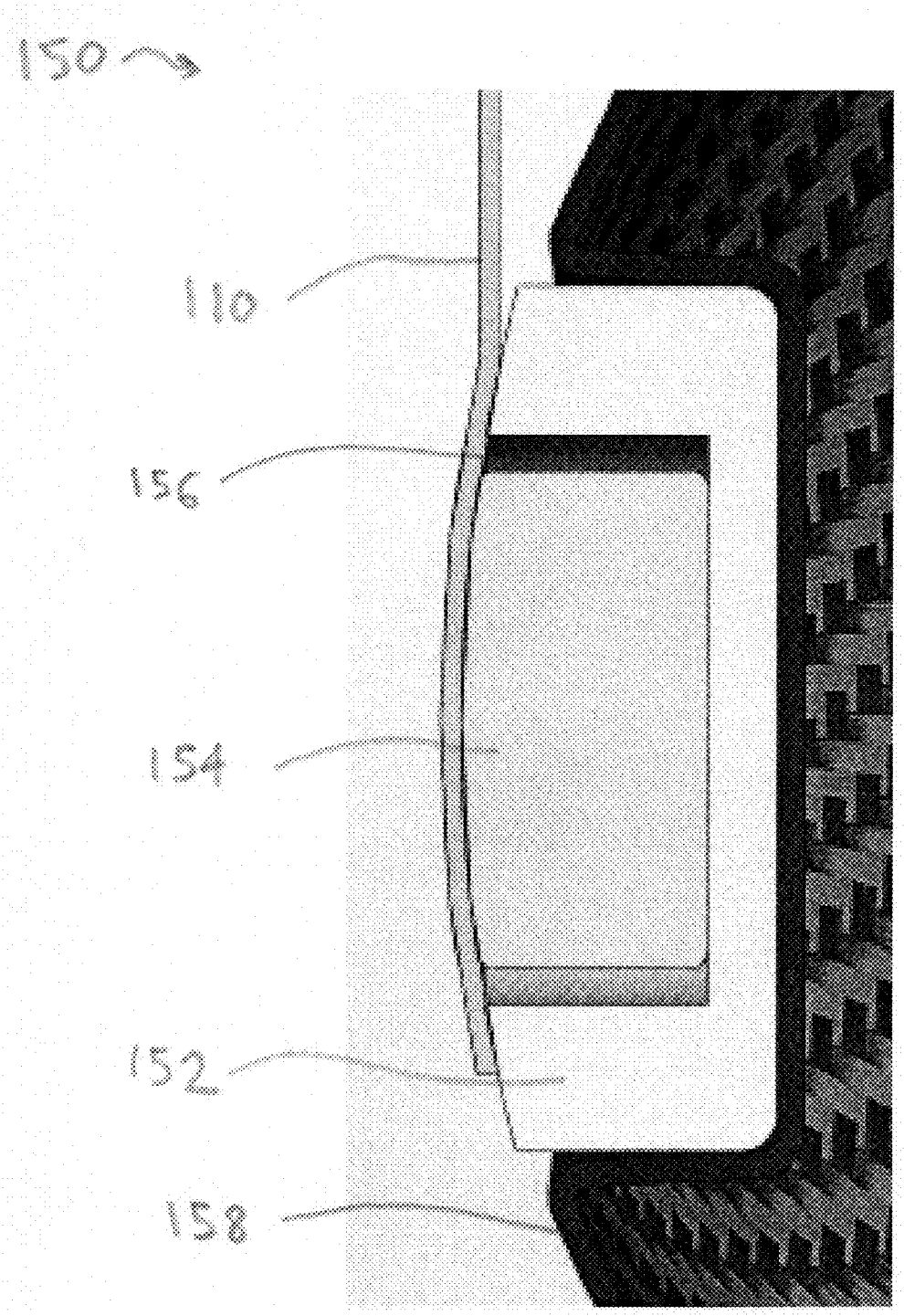

Fig. 3

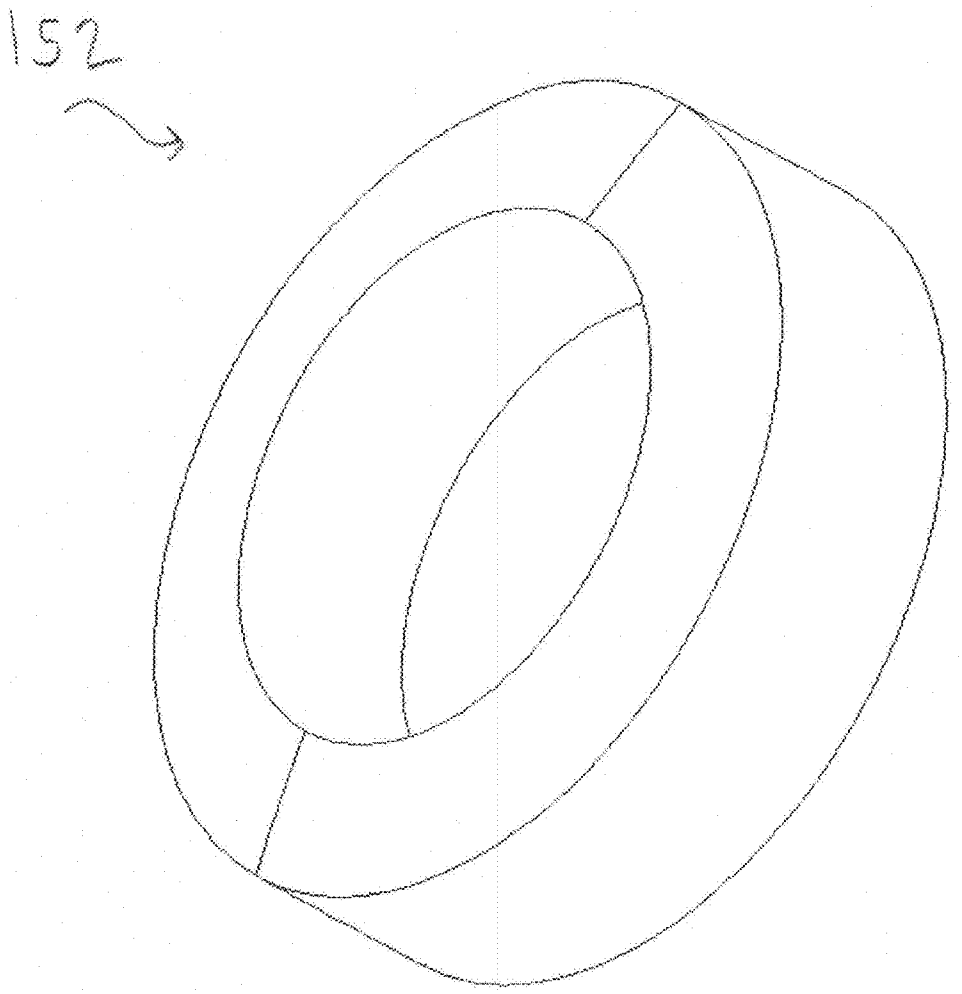

Fig. 4

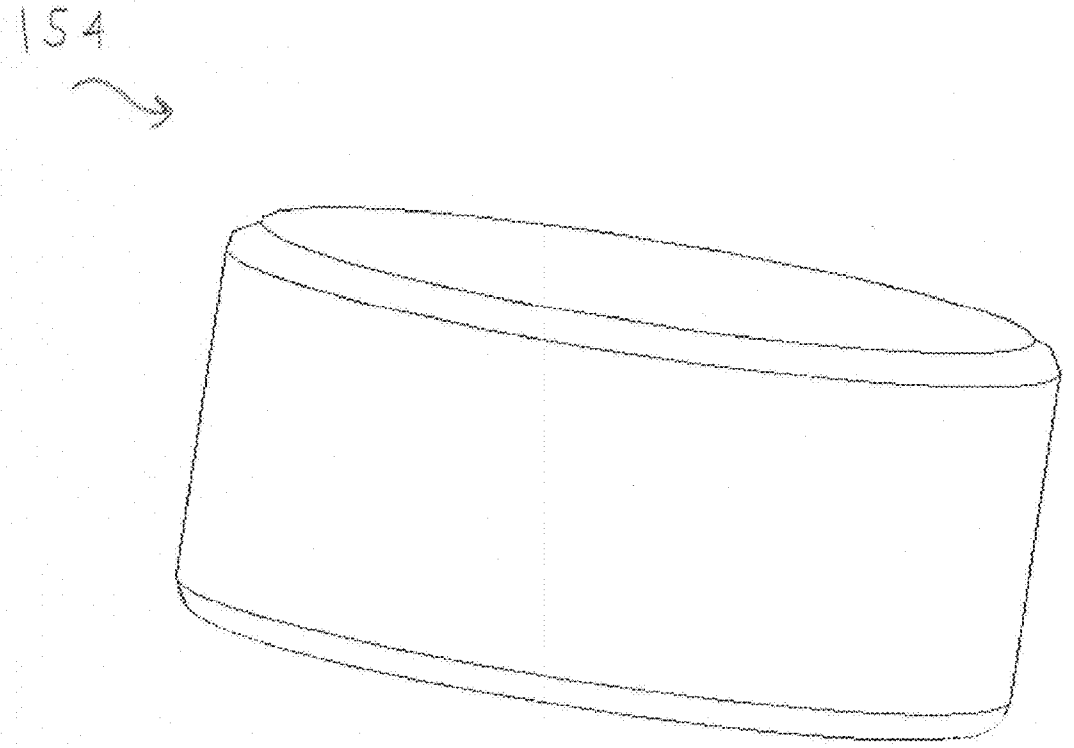

Fig. 5

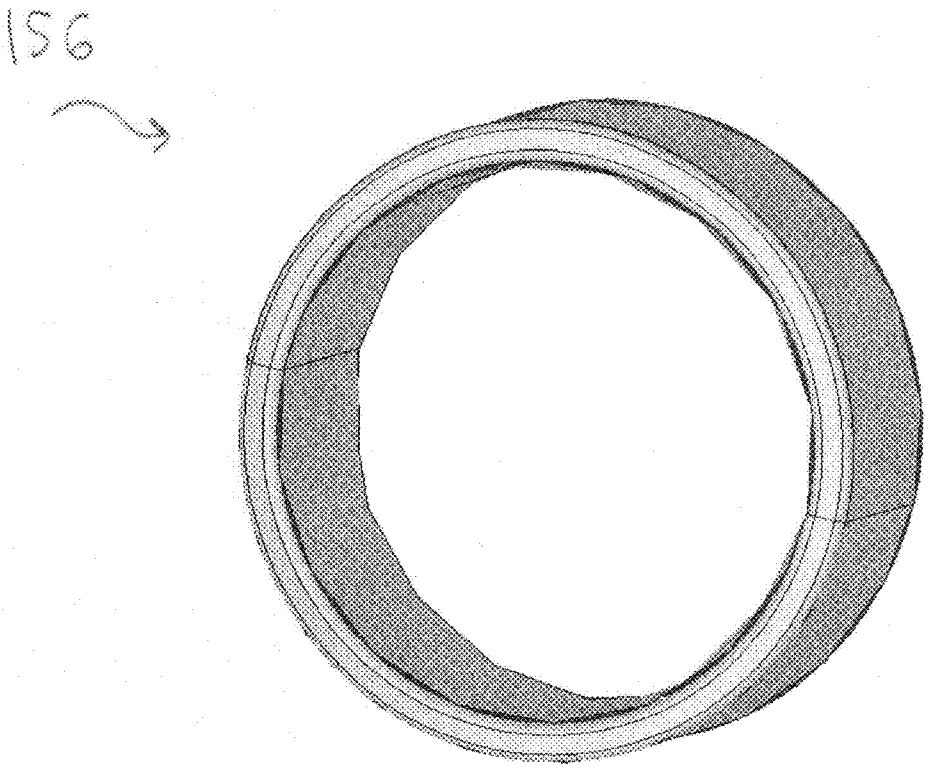

Fig. 6

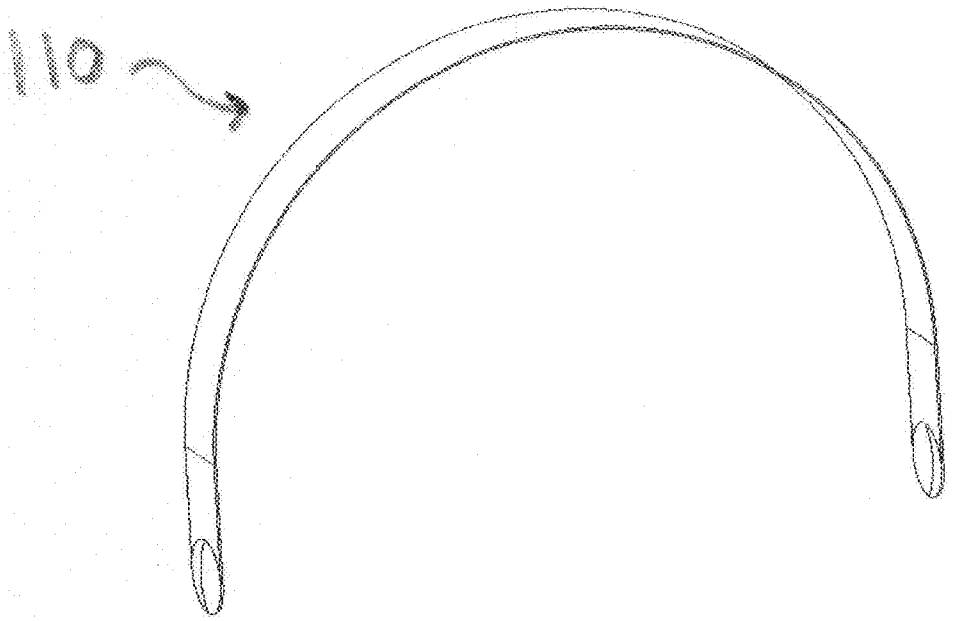

Fig. 7

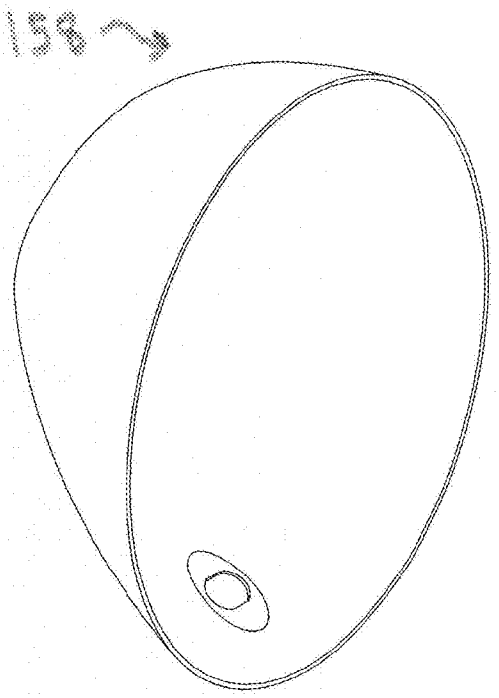

Fig. 8A

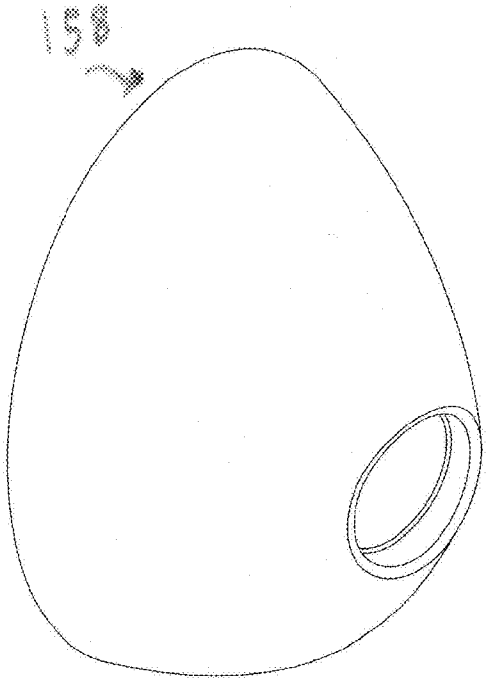

Fig. 8B

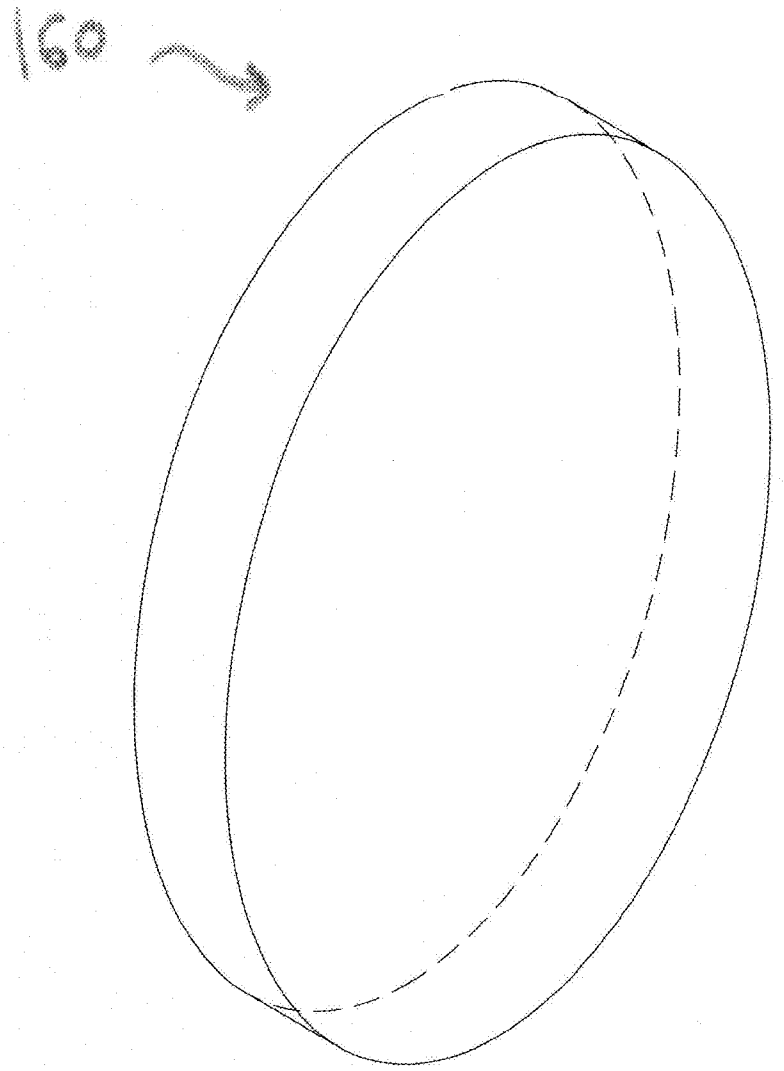

Fig. 9

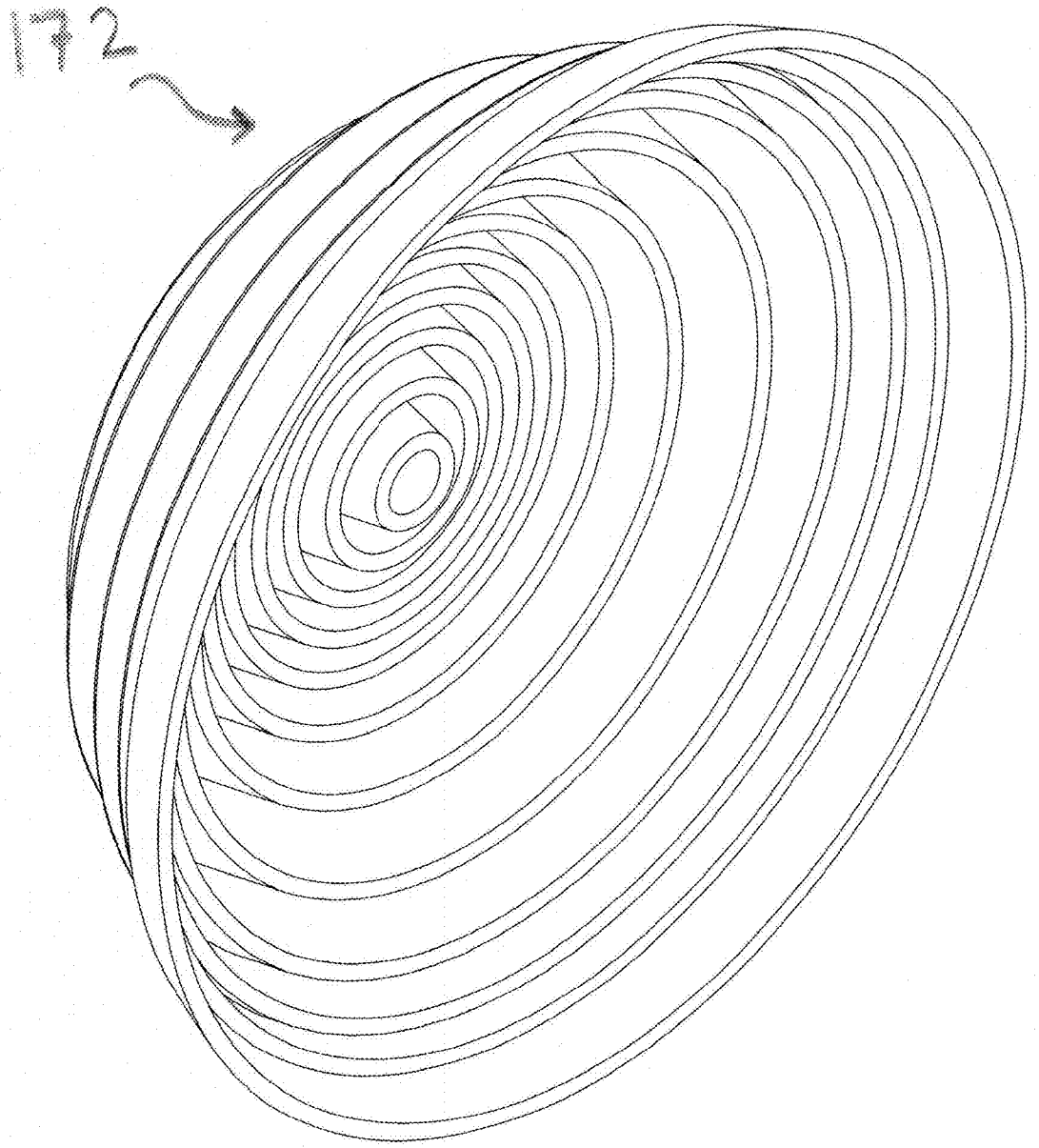

Fig. 10

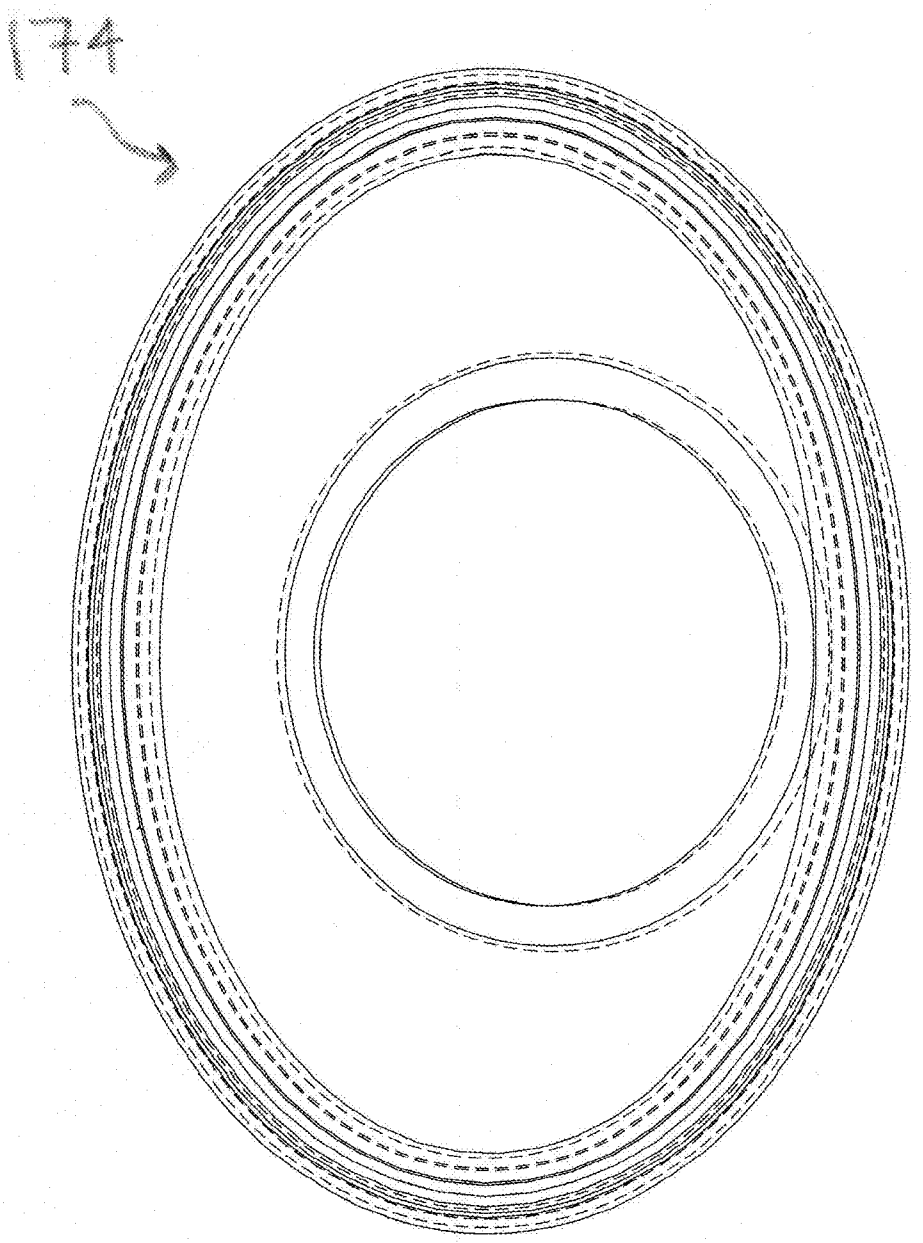

Fig. 11

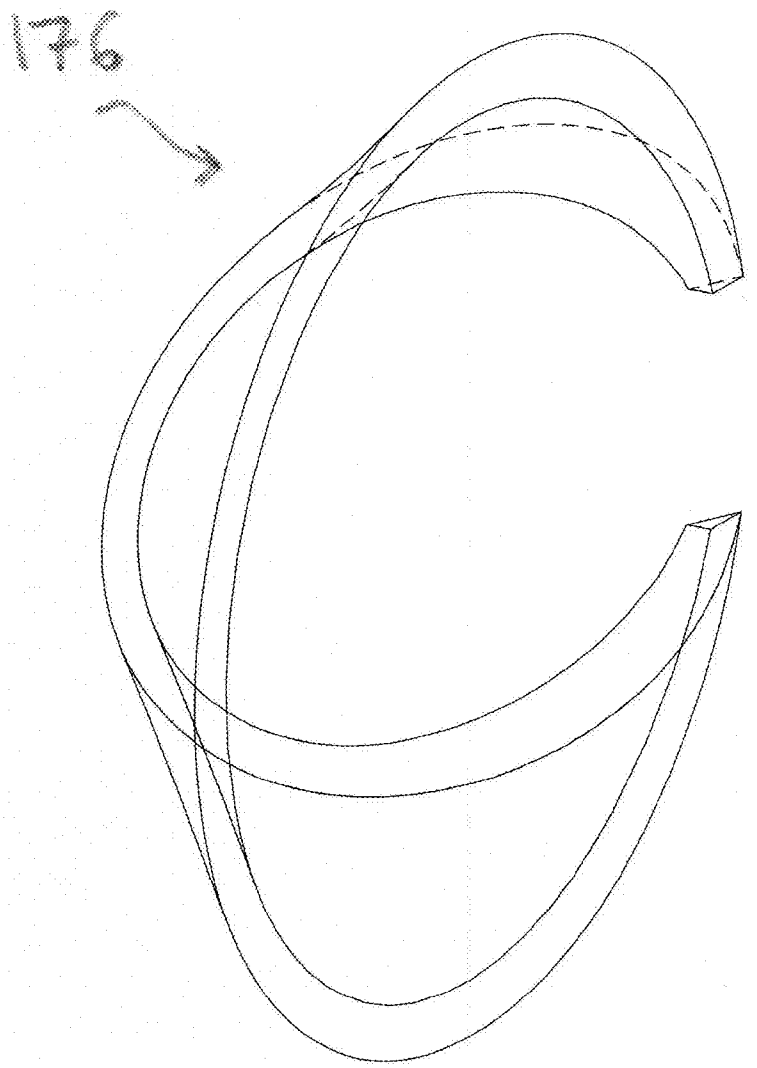

Fig. 12

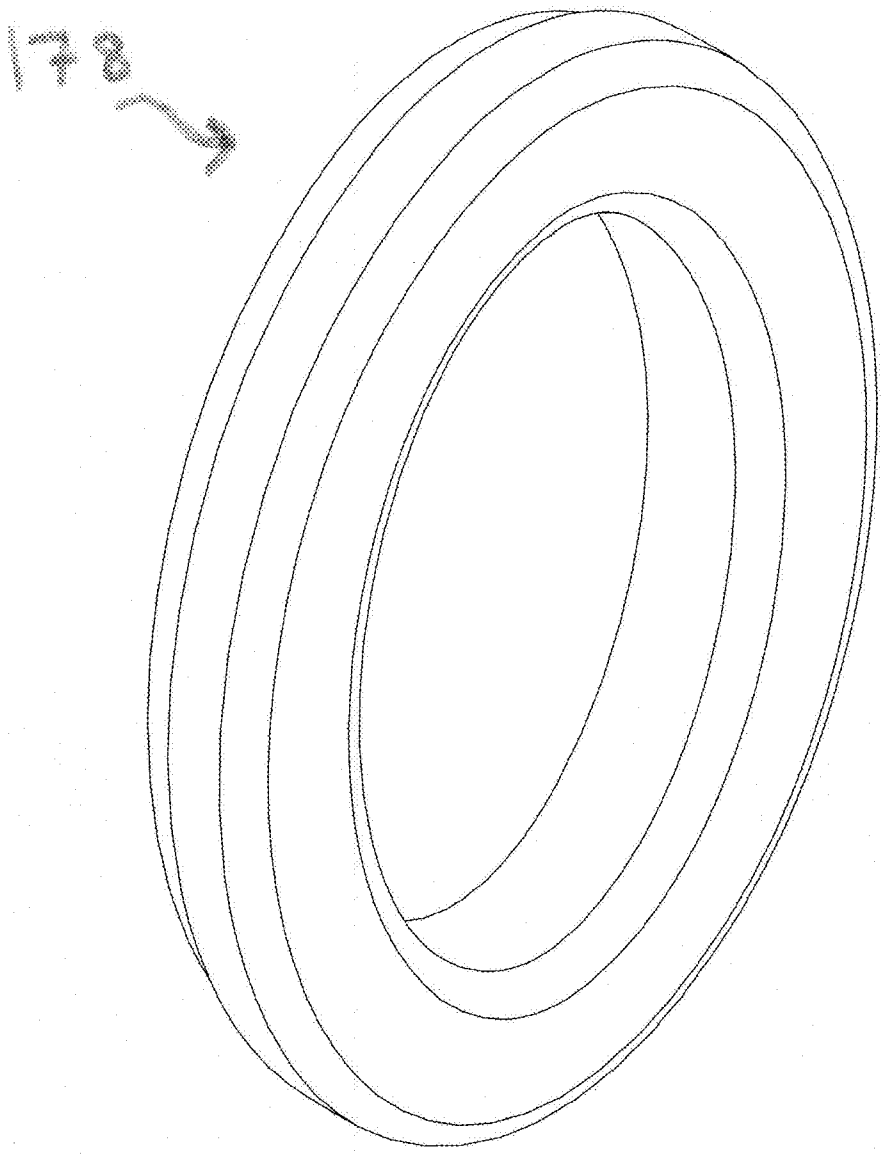

Fig. 13

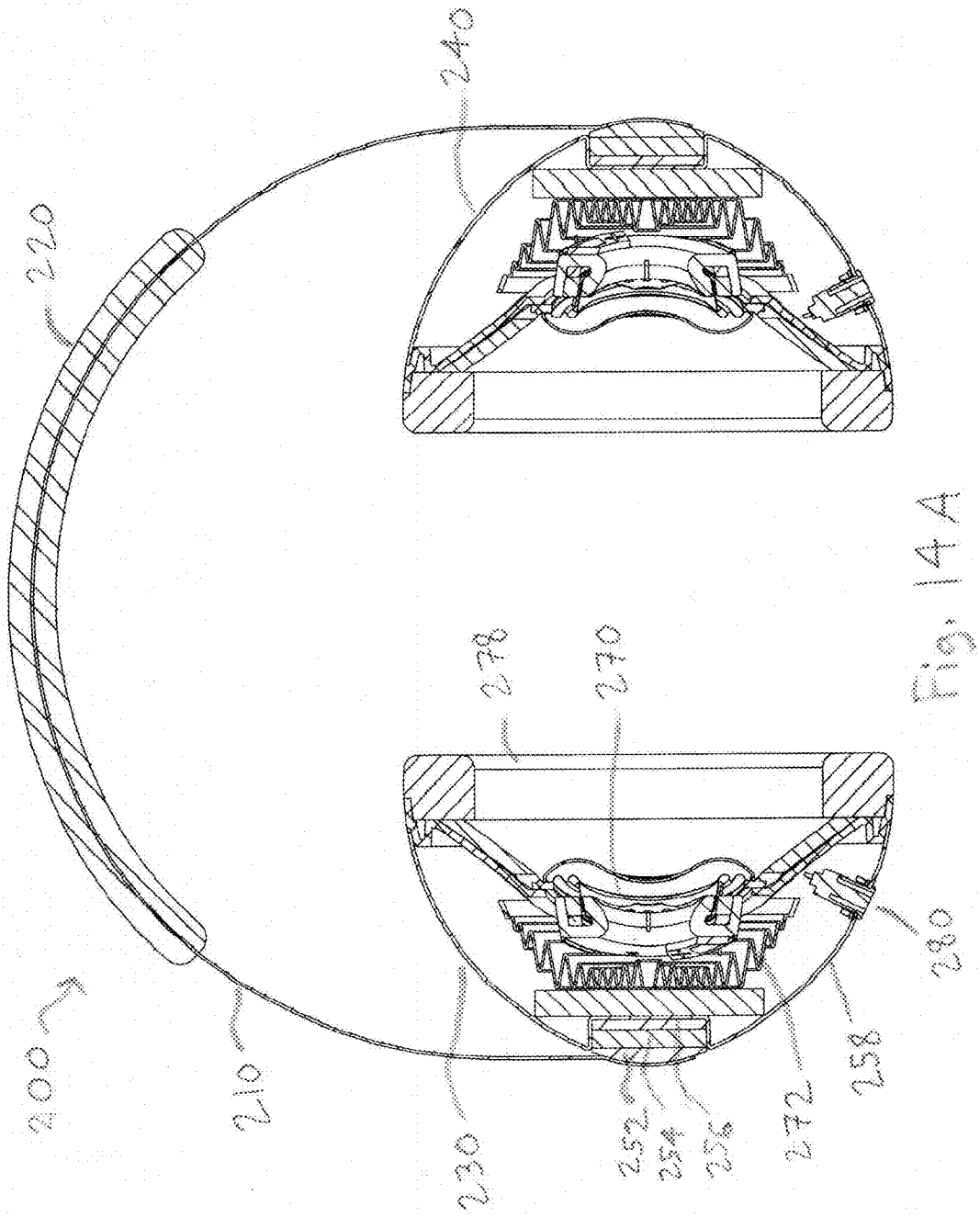

Fig. 14A

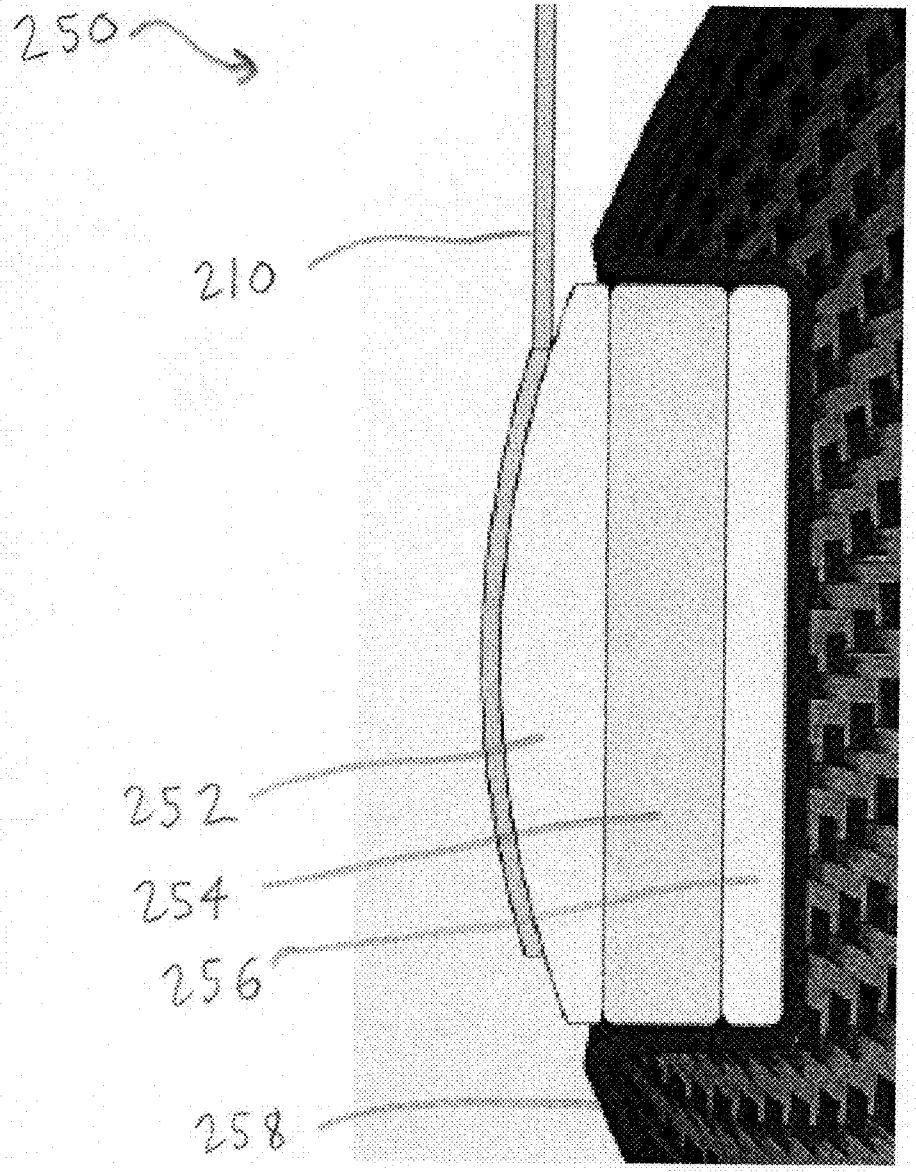

Fig. 14B

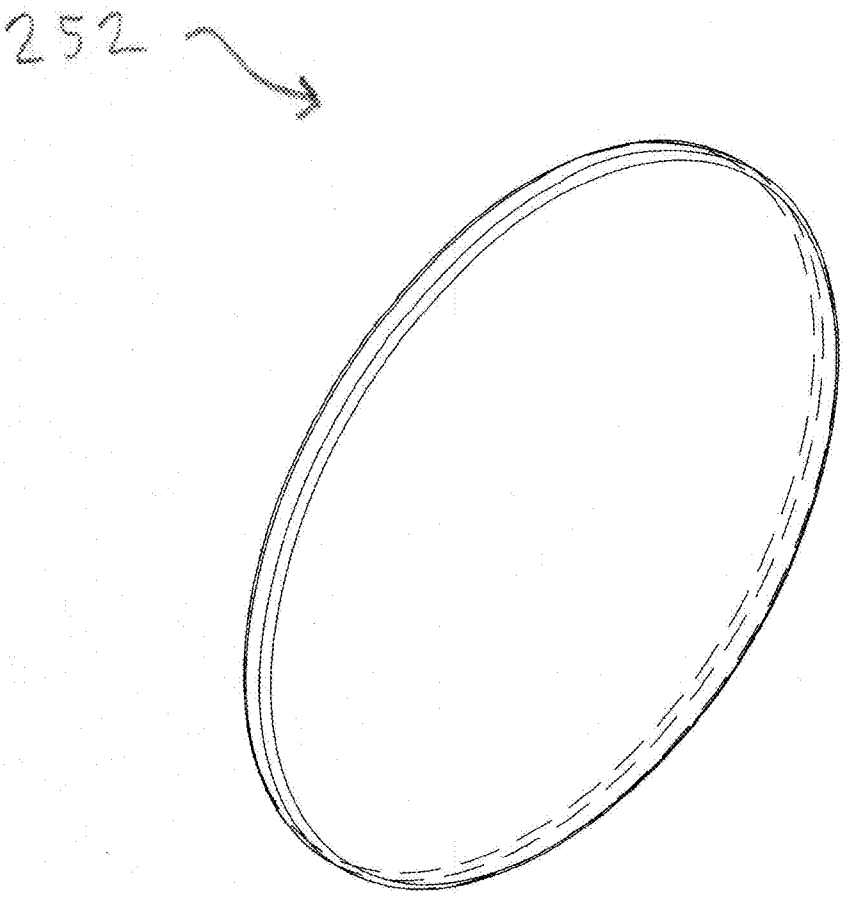

Fig. 14C

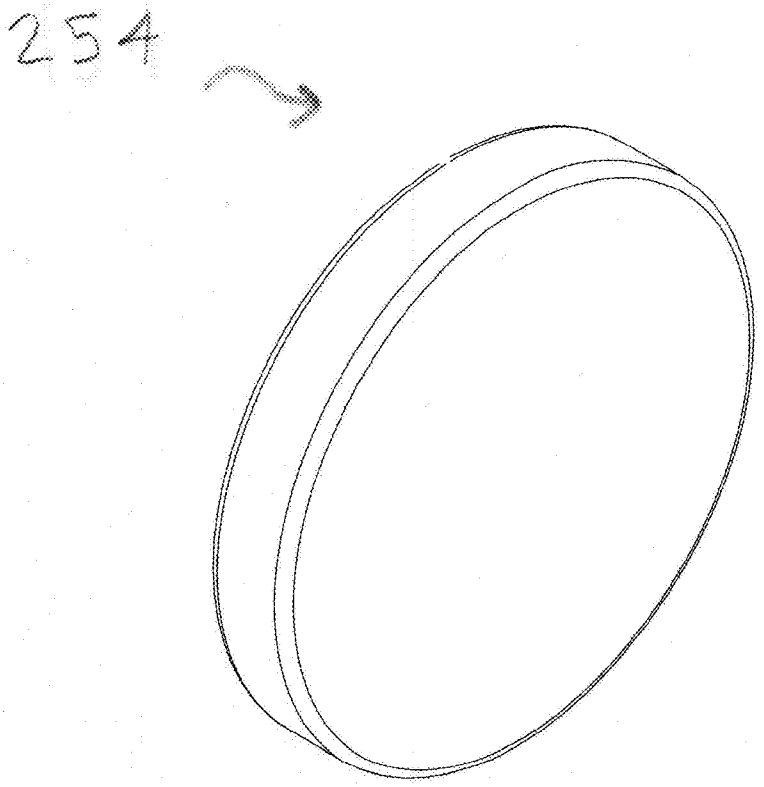

Fig. 14D

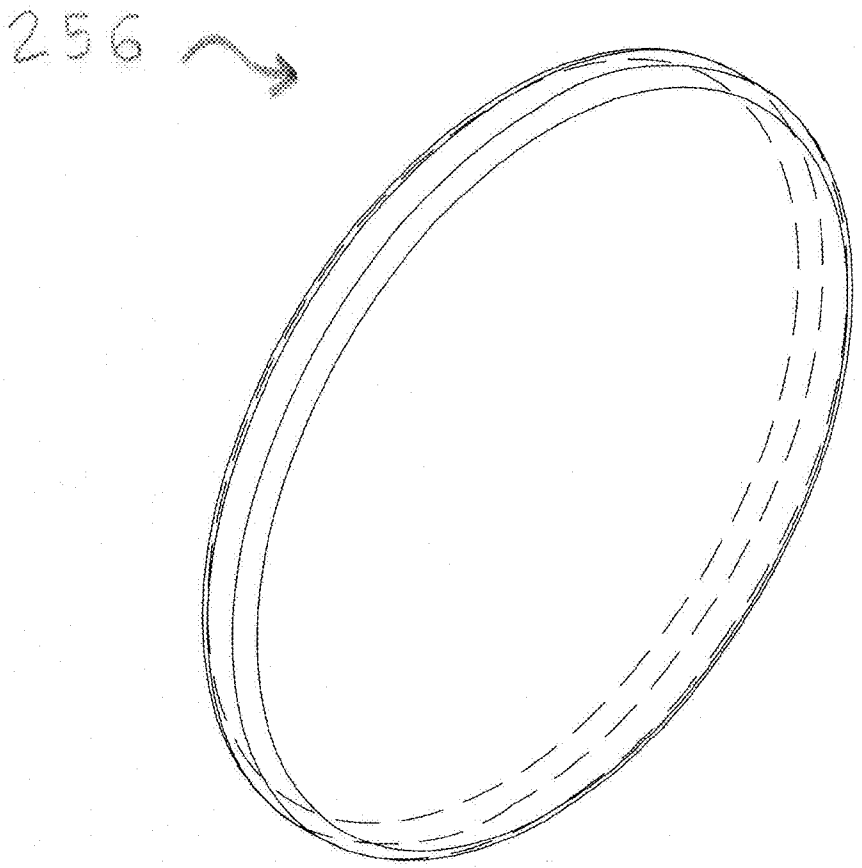

Fig. 14E

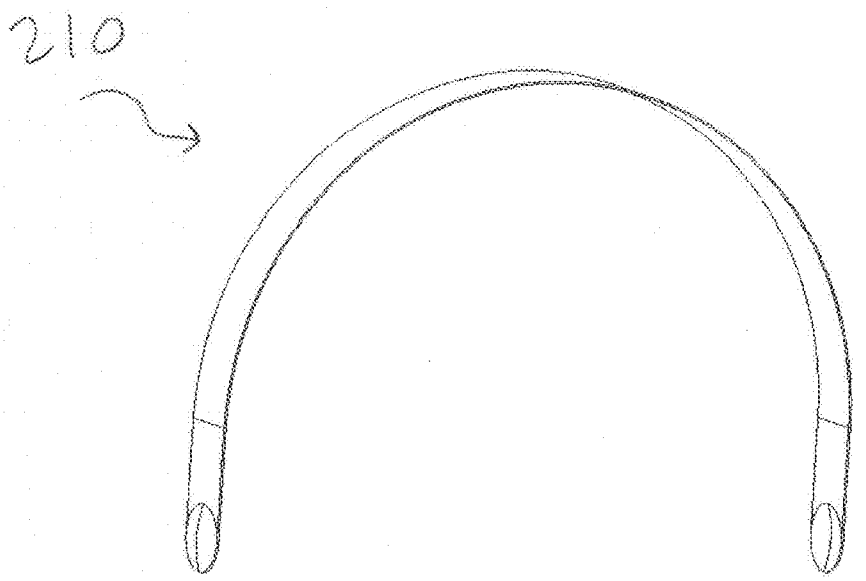

Fig. 14F

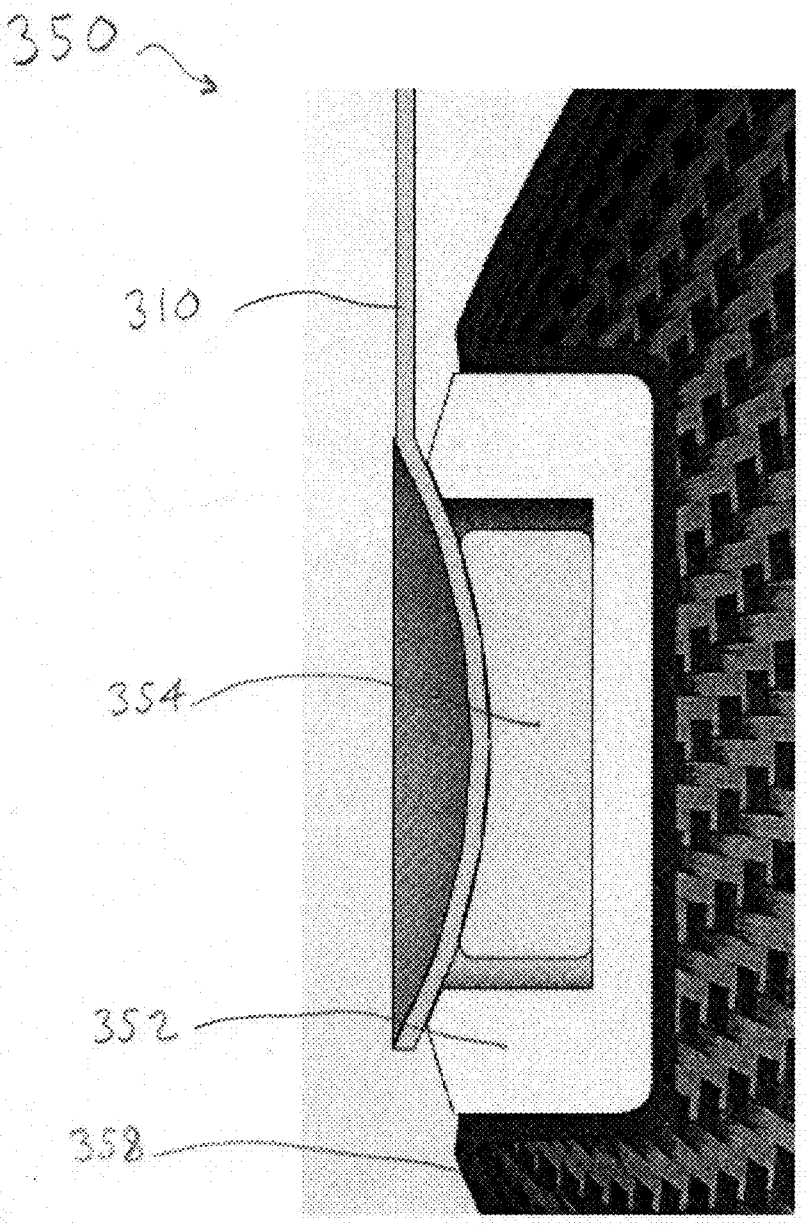

Fig. 15A

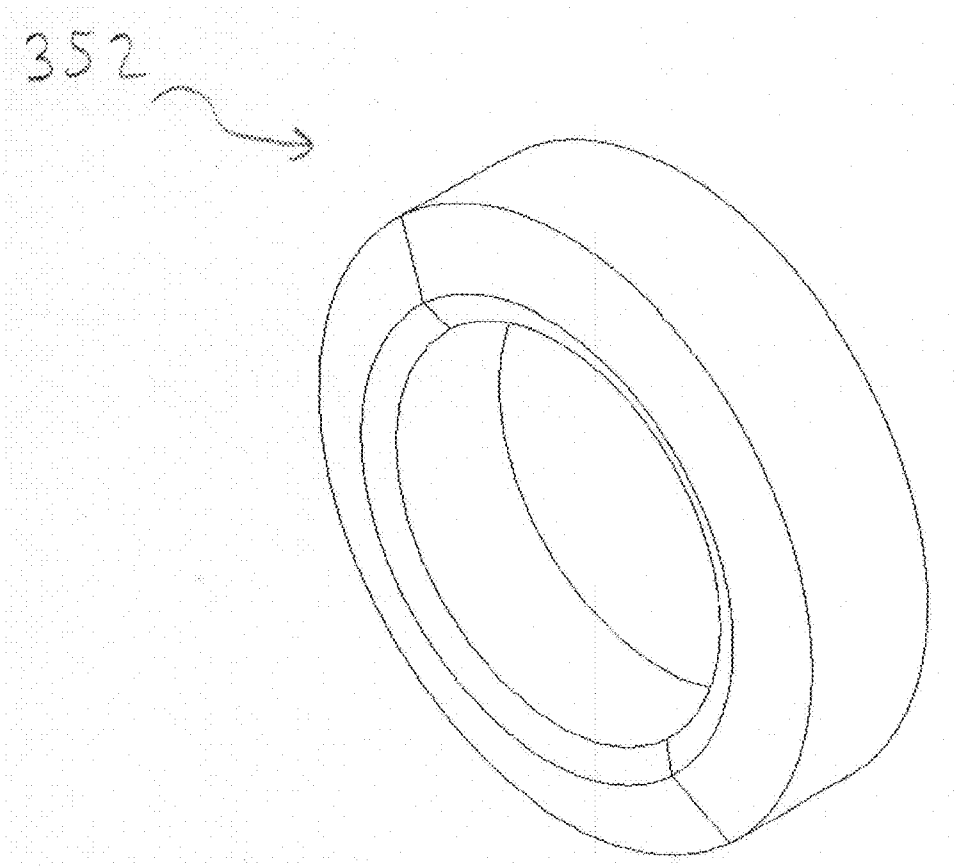

Fig. 15B

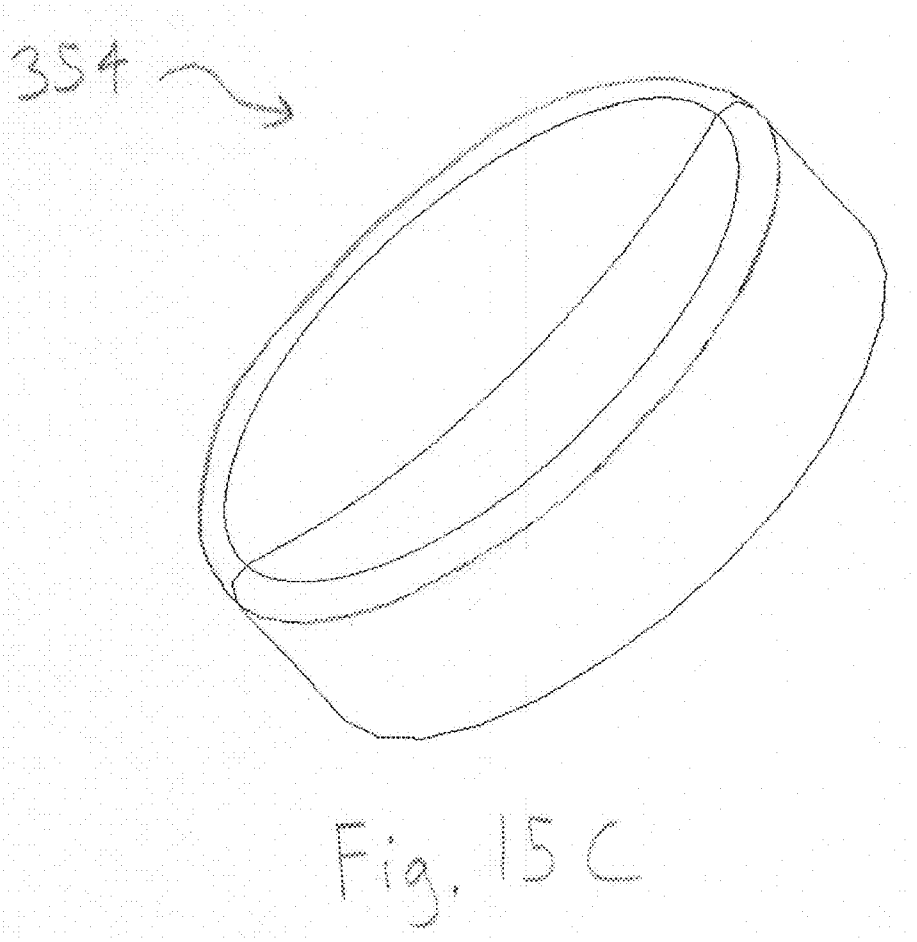

Fig. 15C

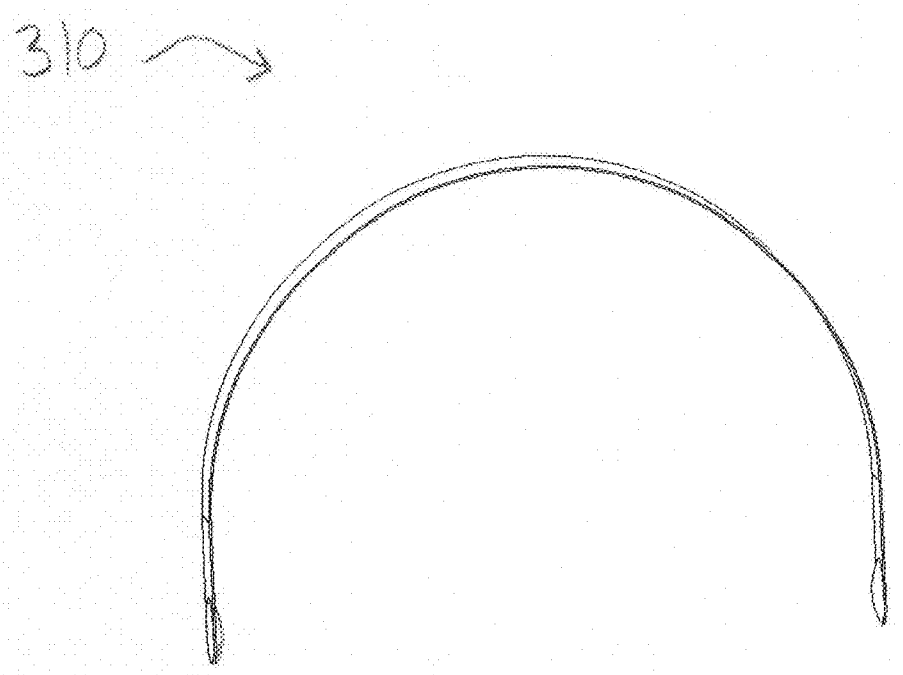

Fig. 15D

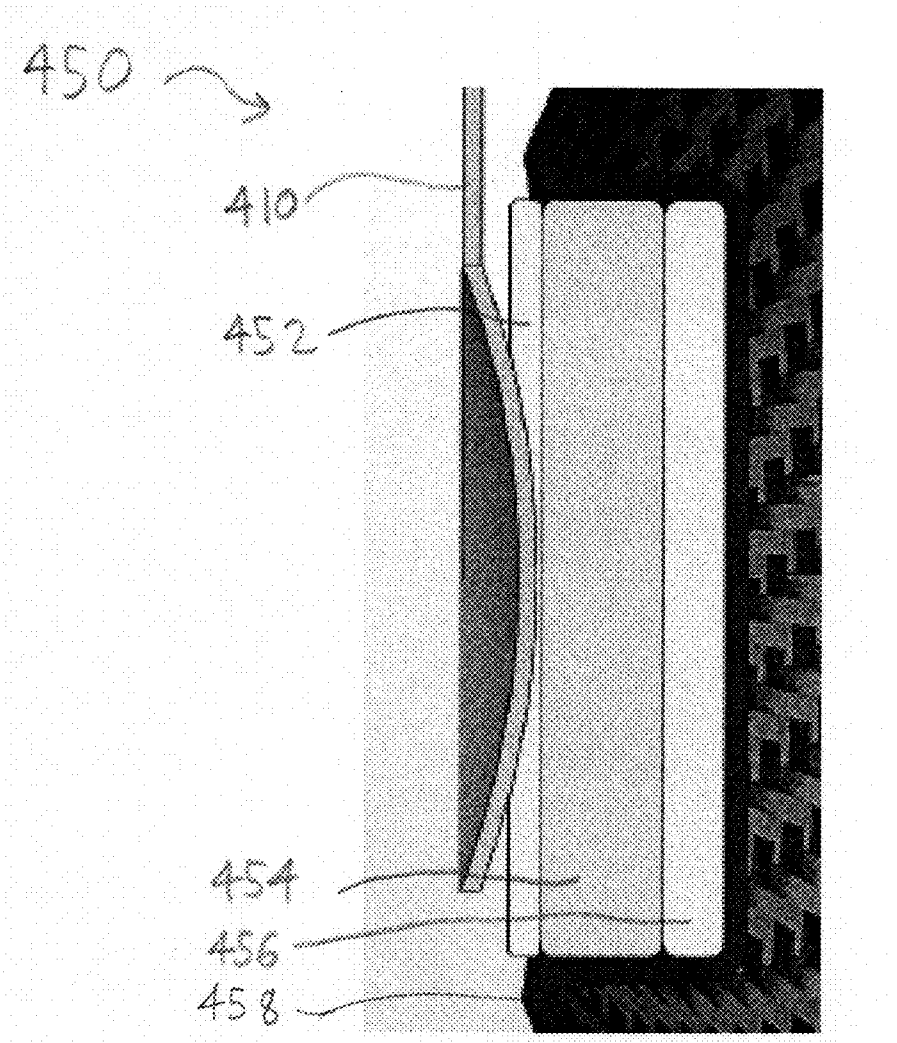

Fig. 16A

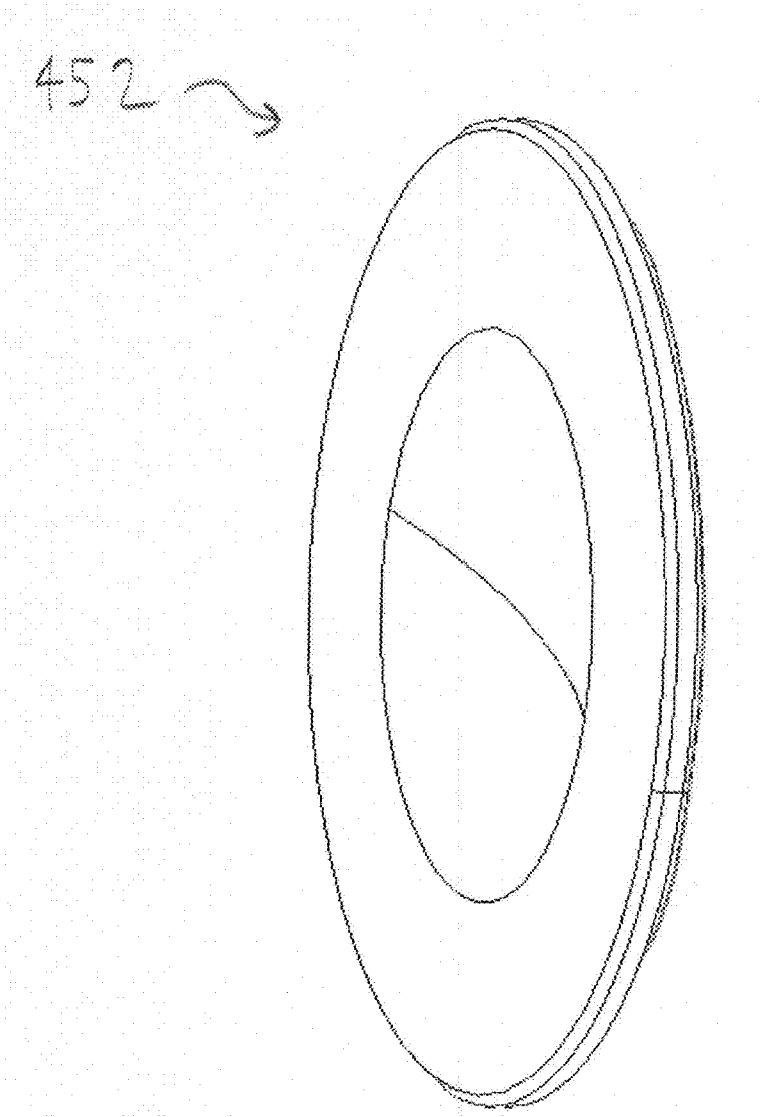

Fig. 16B

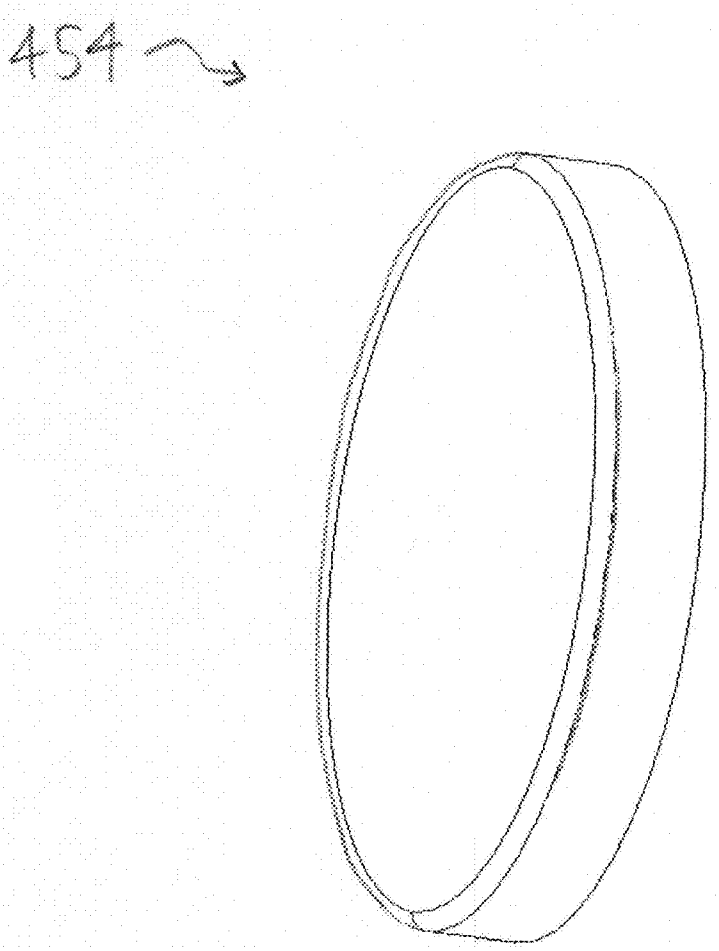

Fig. 16C

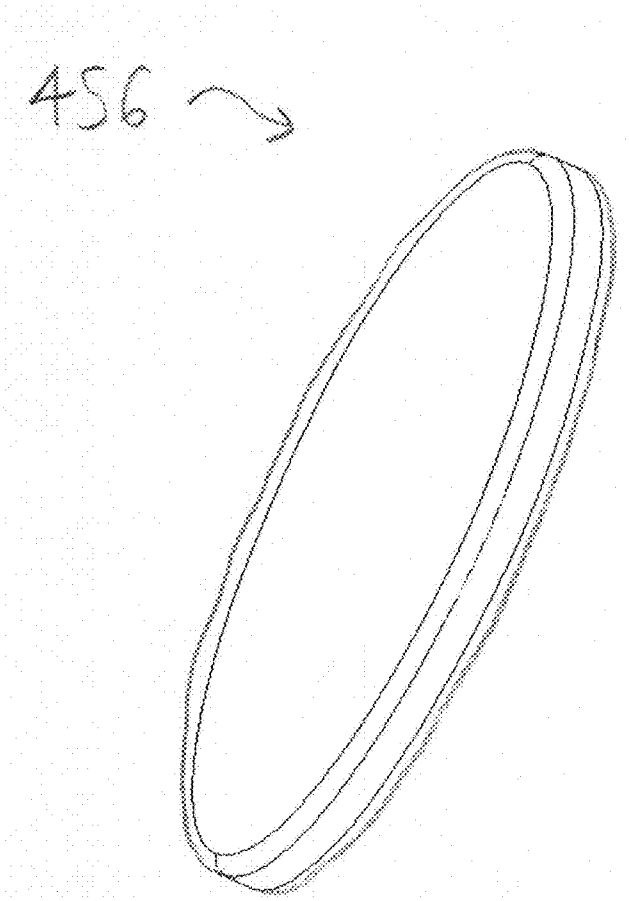

Fig. 16D

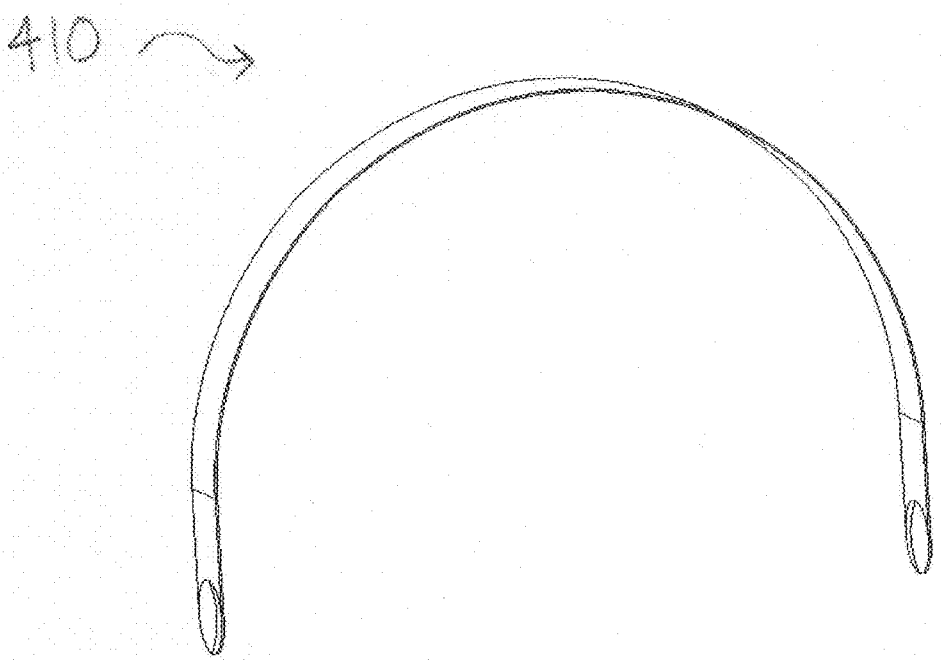

Fig. 16E

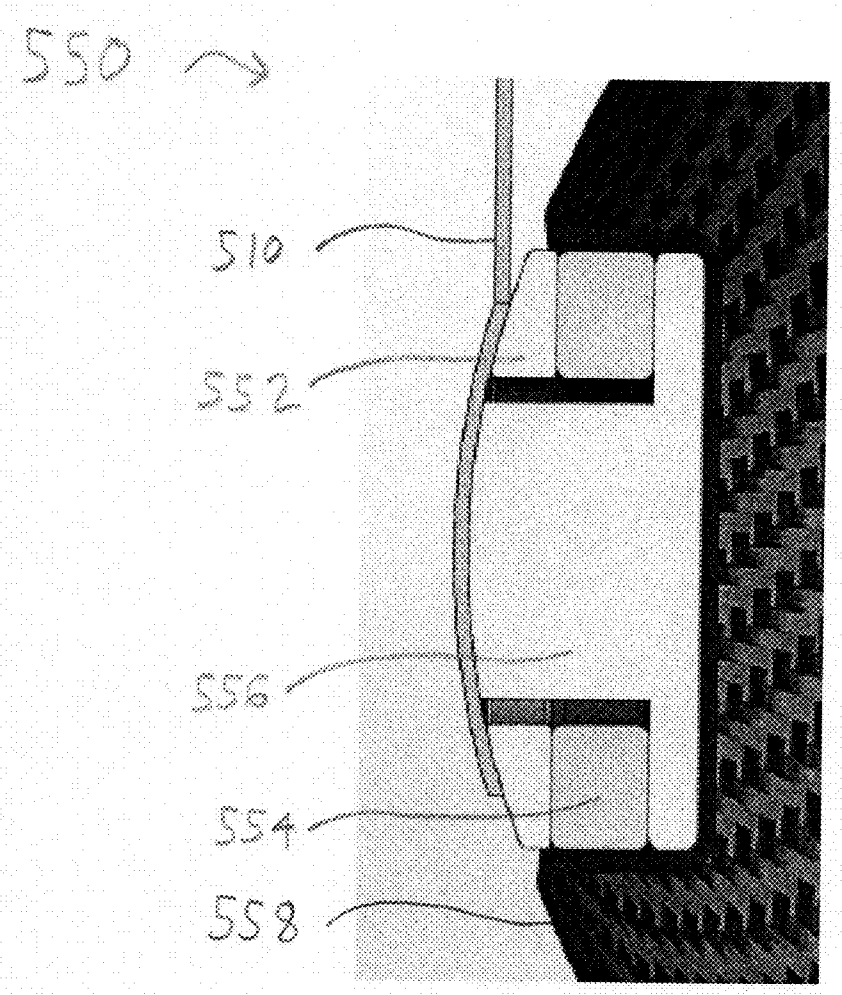

Fig. 17A

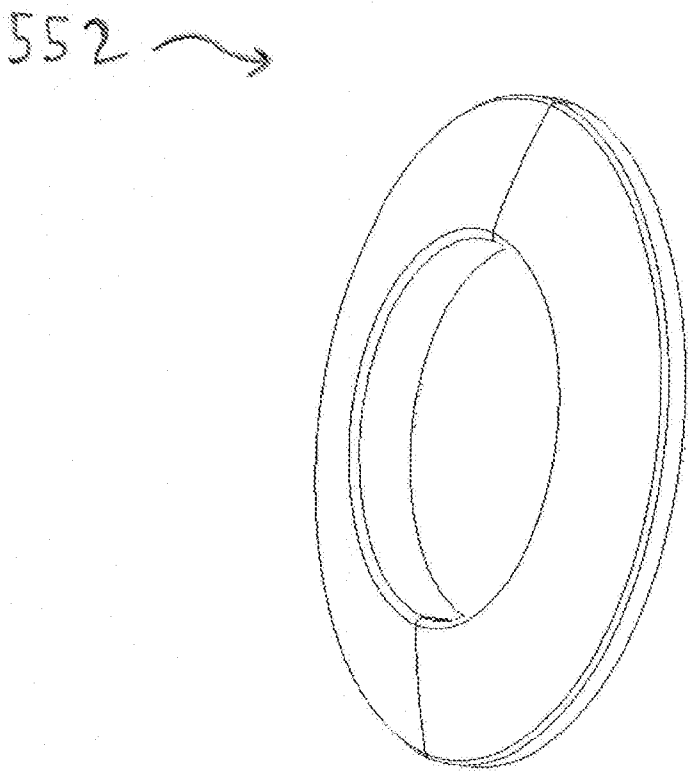

Fig. 17B

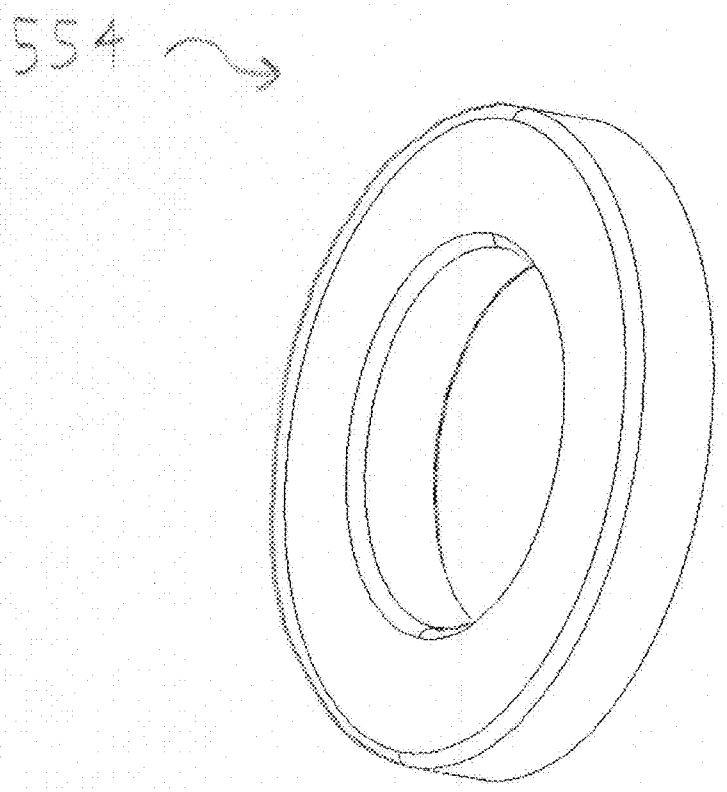

Fig. 17C

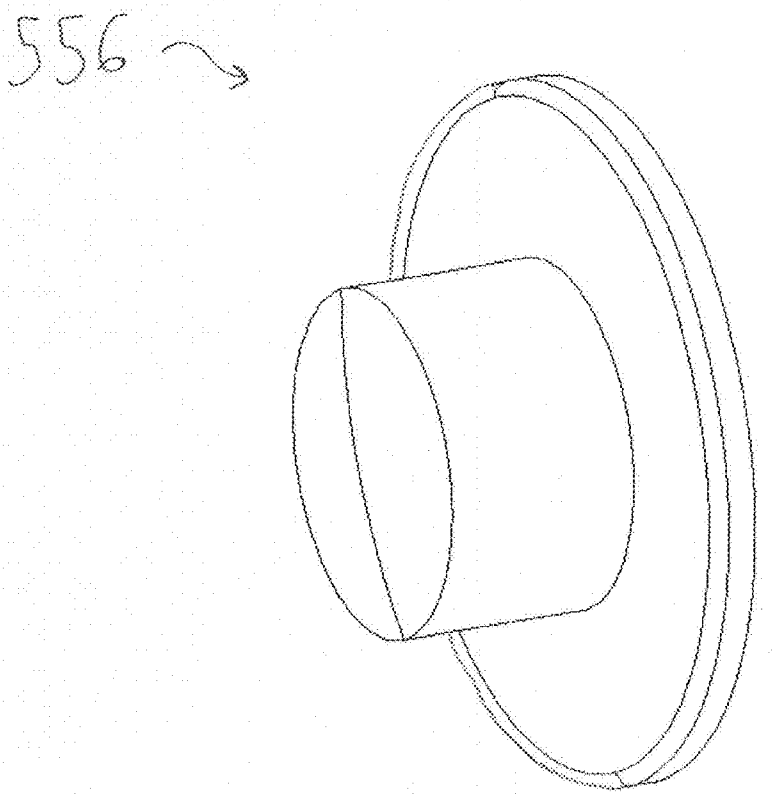

Fig. 17D

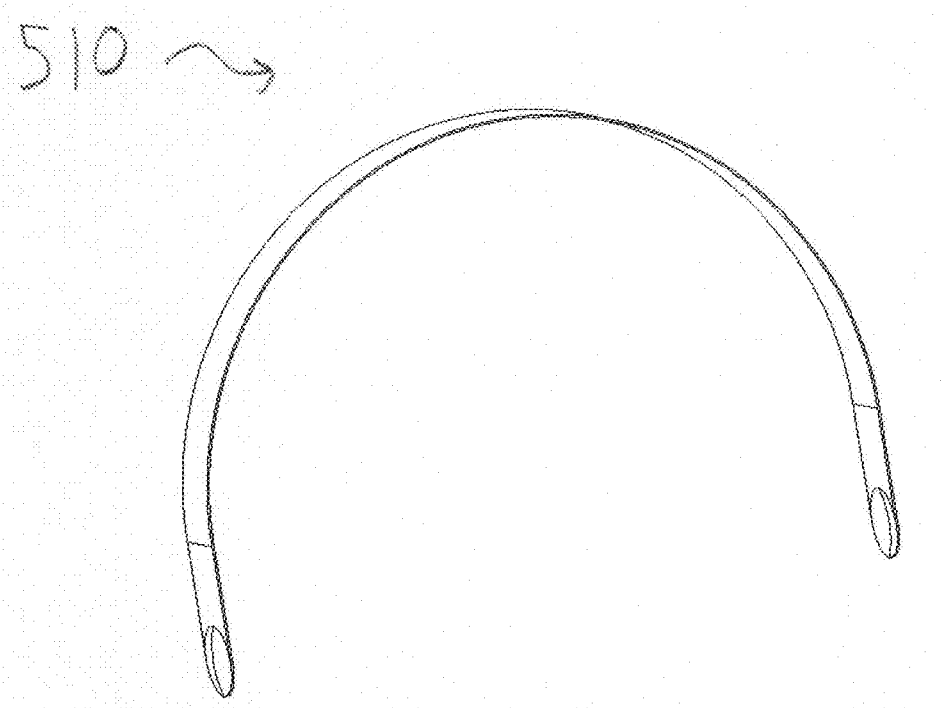

Fig. 17E

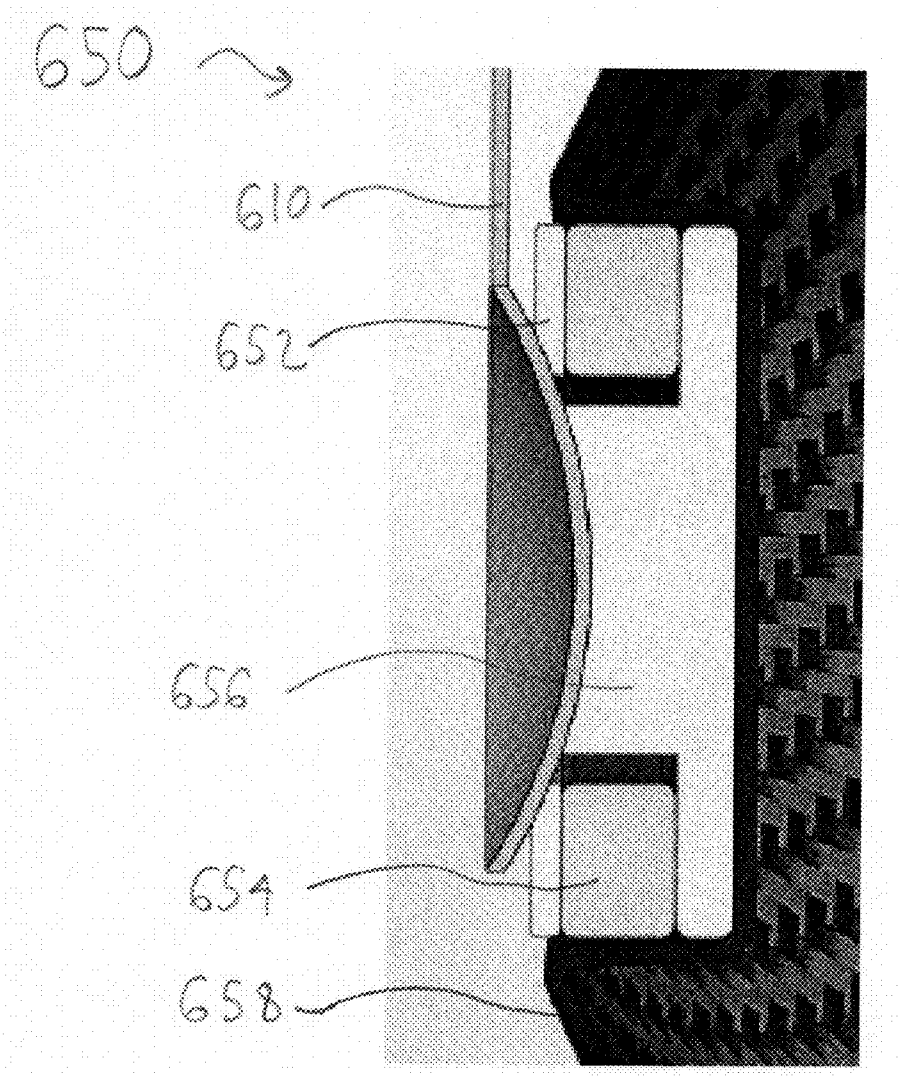

Fig. 18A

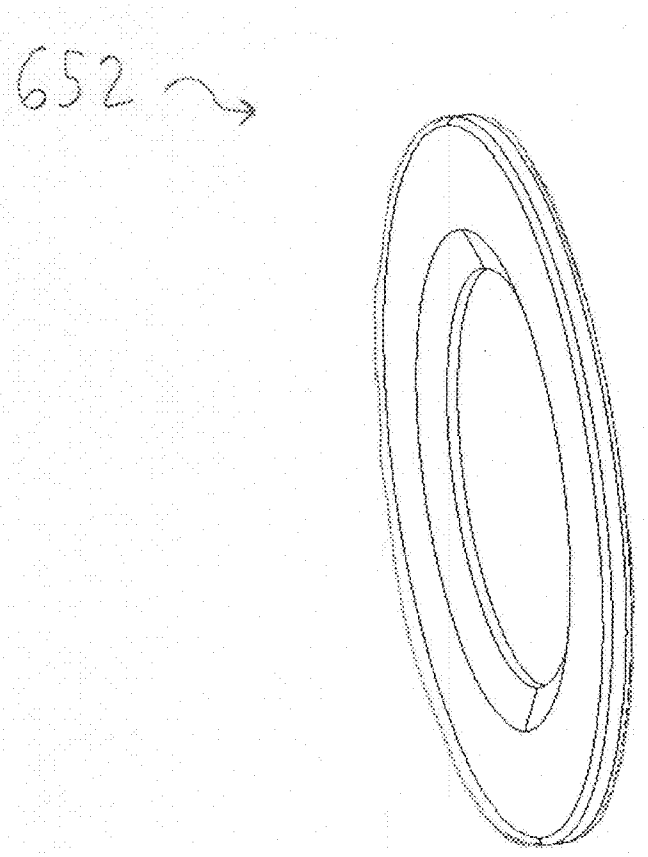

Fig. 18B

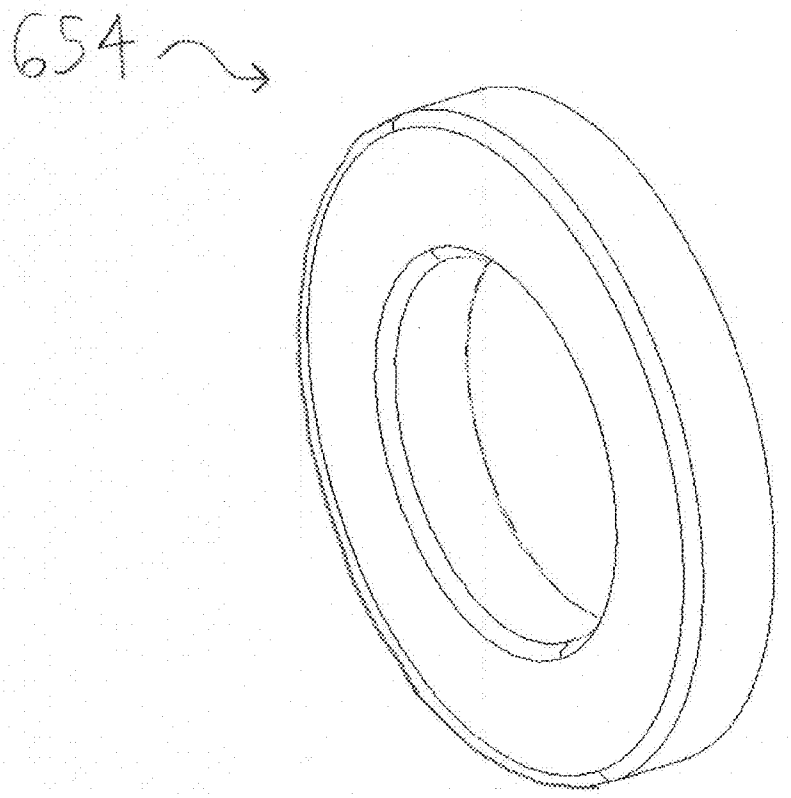

Fig. 18C

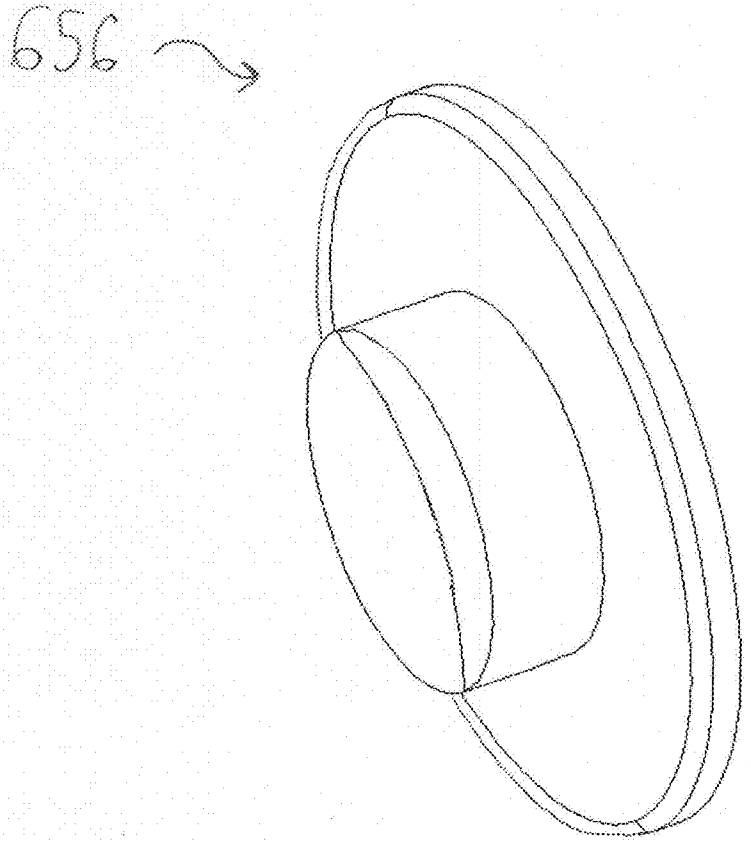

Fig. 18D

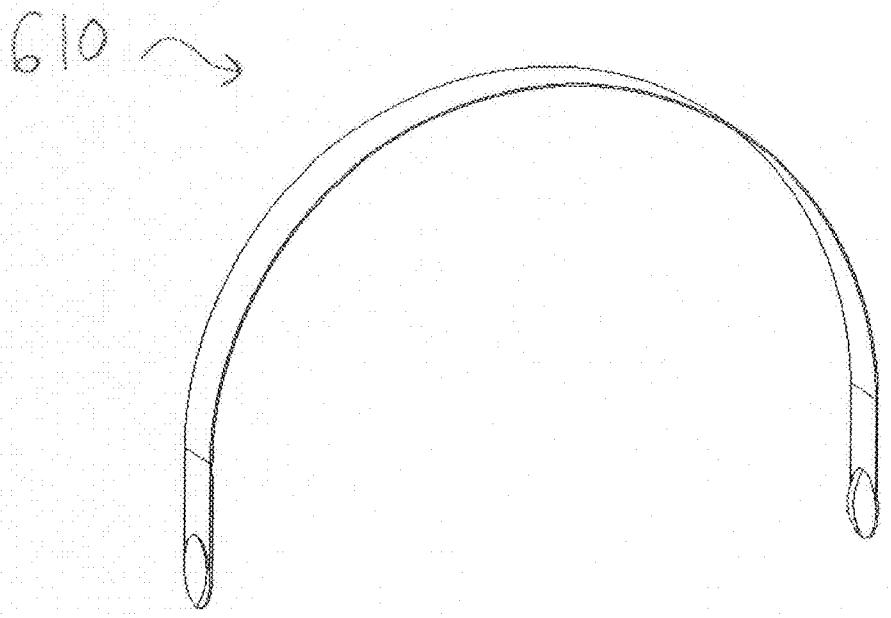

Fig. 18E

HEADPHONE ATTACHMENT MECHANISM

BACKGROUND

Field

[0001] The present disclosure relates generally to attachment devices and/or mechanisms, and more particularly to headphones with novel and improved attachment features and designs.

Description of the Related Art

[0002] Headphones are a connected pair of speakers or listening devices that are designed to be worn on, over, or around a user's head or neck area and/or on or over the ears. Headphones typically emit sound though the use of transducers or speaker drivers, which are a type of audio transducer that converts electrical audio signals to sound waves. Speaker drivers are commonly associated with specialized transducers, which can reproduce a portion of the audible frequency range. A common type of speaker driver, often referred to as a dynamic or electrodynamic driver, converts electric current to sound waves via a coil of wire. This is widely known as a voice coil, which is often suspended between magnetic poles. During operation, a signal is delivered to the voice coil by means of electrical wires. The current flowing in the voice coil creates a magnetic field that causes a component, such as a diaphragm, to be forced in one direction or another. This force can move against a field established by magnetic gaps as the electrical signal varies. The back-and-forth, oscillatory motion drives the air in the device, which results in pressure differentials that convert to sound waves. Put more succinctly, speaker drivers utilize electrical audio signals to drive air through controlled movement, which in turn results in sound output.

[0003] Headphones use speaker drivers to produce sound into a user's ear, which are often in components distinct from the headband, such as cups or side speakers. Accordingly, headphones are designed to allow a user to listen to an audio source in a private manner. This type of use is in contrast with the use of speaker drivers by standard speakers, such as a loudspeaker, which emits sound publicly into the ambient. In order to emit sound into the user's ears, many types of headphones use a headband or band that can run around, on, or over the user's head to hold the speakers in the proper position. Additionally, to emit sound into a user's ears, headphones can connect to a source such as an audio signal, e.g. a CD or mp3 player, a portable media player, or a mobile phone. This connection can either be direct, such as by using a cord, or by using wireless technology, such as Bluetooth technology.

[0004] Because headphones use a headband or band that attaches to the side speakers, the ability to freely move in any direction can be restricted. Further, many headphones use designs that actually limit the movement of components. For example, some headphones use a hinge design that can restrict movement to individual rotation axes. Additionally, some headphones use designs that limit the way in which headphones can maneuver. For instance, some headphone designs use components that can limit the degree of spherical rotation.

[0005] In some instances, the aforementioned problems are attributable to the limited adjustability of the headphones. Headphones can often be bulky or restricted in the manner of movement. For example, most headphones keep the headband tightly adhered to the cup or side speakers. Accordingly, problems can be encountered when the user desires to move the headband separately from the cups or side speakers. Moreover, the ability to transport headphones can be restricted by this limited adjustability.

[0006] In an attempt to solve the problems mentioned above, those in the art have used a number of different structures. However, the aforementioned issues continue to exist, which continue to present problems for headphones.

SUMMARY

[0007] The present disclosure relates to novel and improved headphone designs that optimize the movement and efficiency of components. Headphones according to the present disclosure can have an improved ability to facilitate component movement. The present disclosure also provides headphones that can freely separate individual components from one another. In addition, headphones described herein can provide a novel and improved manner in which to foster component adjustability, which can improve the efficiency and/or comfort for the user.

[0008] Embodiments according to the present disclosure can improve the overall component movement in headphones through a novel attachment mechanism or device. Headphone designs according to the present disclosure can increase the ability of components to freely move in a variety of directions, which can in turn provide more options to headphone users. Indeed, this increase in freedom of component movement provides headphone users with an increased ability to optimize component positioning and/or performance. As a result, the overall headphone user experience can be improved.

[0009] Headphones according to the present disclosure can also allow for an improved ability to adjust the component positioning. This in turn provides a variety of advantages, such as increased user comfort and satisfaction. Moreover, this component adjustability can allow headphones according to the present disclosure to have adjustable shapes and/or sizes. For instance, headphones according to the present disclosure can adjust one or more components in order to become more compact, which can prove useful to users for travel or mobility purposes. Likewise, headphone components can adjust to return back to their original positioning. Furthermore, component adjustability can help to facilitate the transition from one user to another, most notably users of different sizes.

[0010] Embodiments according to the present disclosure can also include headphones with removable components. For instance, the headband or band can be removable from the remaining headphone components, such as the cups or side speakers. This removable capability described herein includes a number of advantages, including the ability of headphone components to be exchanged for similar components of a different size. Additionally, the ability to remove individual components can prove useful to headphone users for travel or mobility purposes. It is understood that any component in the headphones according to the present disclosure can utilize the novel and improved features described in the embodiments herein.

[0011] One embodiment according to the present disclosure includes a headphone assembly comprising at least one speaker cup, an attachment cup, an attachment magnet, and a headband. In addition, the attachment cup can be on at

least a portion of the speaker cup and the attachment magnet can be on at least a portion of the attachment cup. Furthermore, the headband can be on the attachment magnet.

[0012] Another embodiment according to the present disclosure includes a headphone assembly comprising at least one attachment assembly, which comprises a speaker cup, a sphere cup, an attachment device, and a headband. Additionally, the sphere cup can be on the speaker cup, the attachment device can be on the sphere cup, and the attachment device can be on the sphere cup. Moreover, the headband can be on the attachment device, wherein the headband substantially forms around the shape of the attachment device.

[0013] In yet another embodiment, the present disclosure can include a headphone assembly comprising a left cup assembly and a right cup assembly, wherein each cup assembly comprises a speaker cup, an attachment cup, and an attachment device. Further, the attachment cup can be on at least a portion of the speaker cup, and the attachment device can be on at least a portion of said attachment cup. The headphone assembly can also comprise a headband comprising a left attachment portion and a right attachment portion, wherein the left and right attachment portions are detachably on the left and right cup assemblies, respectively.

[0014] These and other further features and advantages of the disclosure would be apparent to those skilled in the art from the following detailed description, taken together with the accompanying drawings, in which:

BRIEF DESCRIPTION OF THE DRAWINGS

[0015] FIG. **1**A is a top side perspective view of one embodiment of a headphone assembly according to the present disclosure;

[0016] FIG. **1**B is a side view of the headphone assembly in FIG. **1**A;

[0017] FIG. **1**C is a sectional cut-out view of the headphone assembly in FIG. **1**A;

[0018] FIG. **2** is an exploded perspective view of one embodiment of a cup assembly according to the present disclosure;

[0019] FIG. **3** is a close-up view of one embodiment of an attachment assembly according to the present disclosure;

[0020] FIG. **4** is a top side perspective view of a sphere cup according to the present disclosure;

[0021] FIG. **5** is a top side perspective view of a sphere magnet according to the present disclosure;

[0022] FIG. **6** is a top side perspective view of a sphere insert according to the present disclosure;

[0023] FIG. **7** is a top side perspective view of one embodiment of a headband according to the present disclosure;

[0024] FIG. **8**A is a top inside perspective view of one embodiment of a cup according to the present disclosure;

[0025] FIG. **8**B is a top outside perspective view of one embodiment of a cup according to the present disclosure;

[0026] FIG. **9** is a top side perspective view of one embodiment of a tip cover according to the present disclosure;

[0027] FIG. **10** is a top side perspective view of one embodiment of a diaphragm according to the present disclosure;

[0028] FIG. **11** is a side view of one embodiment of a sound board according to the present disclosure;

[0029] FIG. **12** is a side view of one embodiment of a sound board cover according to the present disclosure;

[0030] FIG. **13** is a top side perspective view of one embodiment of an ear pad according to the present disclosure;

[0031] FIG. **14**A is a top side perspective view of another embodiment of a headphone assembly according to the present disclosure;

[0032] FIG. **14**B is a close-up view of an attachment assembly in the embodiment of FIG. **14**A;

[0033] FIG. **14**C is a top side perspective view of one embodiment of a tip bearing in the embodiment of FIG. **14**A;

[0034] FIG. **14**D is a top side perspective view of one embodiment of a tip magnet in the embodiment of FIG. **14**A;

[0035] FIG. **14**E is a top side perspective view of one embodiment of a tip pole in the embodiment of FIG. **14**A;

[0036] FIG. **14**F is a top side perspective view of a headband in the embodiment of FIG. **14**A;

[0037] FIG. **15**A is a top side perspective view of another embodiment of an attachment assembly according to the present disclosure;

[0038] FIG. **15**B is a top side perspective view of a sphere cup in the embodiment of FIG. **15**A;

[0039] FIG. **15**C is a top side perspective view of a sphere magnet in the embodiment of FIG. **15**A;

[0040] FIG. **15**D is a top side perspective view of a headband in the embodiment of FIG. **15**A;

[0041] FIG. **16**A is a top side perspective view of a another embodiment of an attachment assembly according to the present disclosure;

[0042] FIG. **16**B is a top side perspective view of a tip bearing in the embodiment of FIG. **16**A;

[0043] FIG. **16**C is a top side perspective view of a tip magnet in the embodiment of FIG. **16**A;

[0044] FIG. **16**D is a top side perspective view of a tip pole in the embodiment of FIG. **16**A;

[0045] FIG. **16**E is a top side perspective view of a headband in the embodiment of FIG. **16**A;

[0046] FIG. **17**A is a top side perspective view of another embodiment of an attachment assembly according to the present disclosure;

[0047] FIG. **17**B is a top side perspective view of a tip bearing in the embodiment of FIG. **17**A;

[0048] FIG. **17**C is a top side perspective view of a tip magnet in the embodiment of FIG. **17**A;

[0049] FIG. **17**D is a top side perspective view of a tip pole in the embodiment of FIG. **17**A;

[0050] FIG. **17**E is a top side perspective view of a headband in the embodiment of FIG. **17**A;

[0051] FIG. **18**A is a top side perspective view of another embodiment of an attachment assembly according to the present disclosure;

[0052] FIG. **18**B is a top side perspective view of a tip bearing in the embodiment of FIG. **18**A;

[0053] FIG. **18**C is a top side perspective view of a tip magnet in the embodiment of FIG. **18**A;

[0054] FIG. **18**D is a top side perspective view of a tip pole in the embodiment of FIG. **18**A; and

[0055] FIG. **18**E is a top side perspective view of a headband in the embodiment of FIG. **18**A.

DETAILED DESCRIPTION

[0056] The present disclosure relates to novel and improved headphone designs that can optimize and improve component movement, efficiency, and/or performance. Embodiments herein can facilitate the movement of components through a novel attachment mechanism or device. Headphone designs described herein can allow components to freely move in many directions, which can provide users with an increased ability to optimize component positioning and/or performance and allows for an improved user experience. Additionally, headphone embodiments described herein can provide a novel manner in which to foster component adjustability, which can also improve the headphone efficiency and comfort. This component adjustability can allow headphones herein to provide adjustable shapes and/or sizes, which can help to facilitate the transition to users of different sizes. Embodiments according to the present disclosure can also include headphones with removable and/or separable components. For example, the headband or band can be removable from other headphone components, such as the cups or side speakers. This can allow headphone components to be exchanged for similar components. In addition, removable individual components can provide headphone users with increased mobility and/or flexibility.

[0057] Attachment assemblies, devices, and/or mechanisms according to the present disclosure are described herein as being utilized with headphones and/or speakers. However, it is understood that attachment assemblies according to the present disclosure can be used in a wide variety of audio devices, including but not limited to headphones or speakers, as well as any device that utilizes or can benefit from utilizing a novel and improved attachment mechanism. It is also understood that any component in the attachment assemblies according to the present disclosure can utilize the novel and improved features described in the embodiments herein. Moreover, any individual component or combination of components described herein can be used in any appropriate device or attachment application.

[0058] Throughout this disclosure, the preferred embodiment and examples illustrated should be considered as exemplars, rather than as limitations on the present disclosure. As used herein, the term "invention," "device," "apparatus," "method," "disclosure," "present invention," "present device," "present apparatus," "present method" or "present disclosure" refers to any one of the embodiments of the disclosure described herein, and any equivalents. Furthermore, reference to various feature(s) of the "invention," "device," "apparatus," "method," "disclosure," "present invention," "present device," "present apparatus," "present method" or "present disclosure" throughout this document does not mean that all claimed embodiments or methods must include the referenced feature(s).

[0059] It is also understood that when an element or feature is referred to as being "on" or "adjacent" to another element or feature, it can be directly on or adjacent the other element or feature or intervening elements or features may also be present. In contrast, when an element is referred to as being "directly on" or extending "directly onto" another element, there are no intervening elements present. Additionally, it is understood that when an element is referred to as being "connected" or "coupled" to another element, it can be directly connected or coupled to the other element or intervening elements may be present. In contrast, when an element is referred to as being "directly connected" or "directly coupled" to another element, there are no intervening elements present.

[0060] Furthermore, relative terms such as "inner," "outer," "upper," "top," "above," "lower," "bottom," "beneath," "below," and similar terms, may be used herein to describe a relationship of one element to another. Terms such as "higher," "lower," "wider," "narrower," and similar terms, may be used herein to describe angular relationships. It is understood that these terms are intended to encompass different orientations of the elements or system in addition to the orientation depicted in the figures.

[0061] Although the terms first, second, third, etc., may be used herein to describe various elements, components, regions, and/or sections, these elements, components, regions, and/or sections should not be limited by these terms. These terms are only used to distinguish one element, component, region, or section from another. Thus, unless expressly stated otherwise, a first element, component, region, or section discussed below could be termed a second element, component, region, or section without departing from the teachings of the present disclosure. As used herein, the term "and/or" includes any and all combinations of one or more of the associated list items.

[0062] The terminology used herein is for the purpose of describing particular embodiments only and is not intended to be limiting of the disclosure. As used herein, the singular forms "a," "an," and "the" are intended to include the plural forms as well, unless the context clearly indicates otherwise. For example, when the present specification refers to "an" assembly, it is understood that this language encompasses a single assembly or a plurality or array of assemblies. It is further understood that the terms "comprises," "comprising," "includes," and/or "including" when used herein, specify the presence of stated features, integers, steps, operations, elements, and/or components, but do not preclude the presence or addition of one or more other features, integers, steps, operations, elements, components, and/or groups thereof.

[0063] Embodiments of the disclosure can be described herein with reference to view illustrations that are schematic illustrations. As such, the actual thickness of elements can be different, and variations from the shapes of the illustrations as a result, for example, of manufacturing techniques and/or tolerances are expected. Thus, the elements illustrated in the figures are schematic in nature and their shapes are not intended to illustrate the precise shape of a region and are not intended to limit the scope of the disclosure.

[0064] It is understood that while the present disclosure makes reference to attachment assemblies with novel and efficient designs, and that headphone assemblies may be the primary application concerned with the present disclosure, devices incorporating features of the present disclosure can be utilized with any application that has components or elements which might be concerned with attachment devices, mechanisms and/or applications, or any similar application that may benefit from a novel and efficient component design.

[0065] Embodiments according to the present disclosure can comprise headphone assemblies with novel and improved component efficiency. FIG. **1A** displays one embodiment of headphone assembly **100**, which comprises many of the novel and improved features described herein. Headphone assembly **100** can have features that optimize

the efficiency and performance of components, such as by maximizing and/or improving the versatility and movement of components. Moreover, headphone assembly **100** can include features which allow individual components to be freely separable and/or removable from one another. Additionally, headphone assembly **100** can improve component adjustability, which can improve the device efficiency and comfort for the user.

[0066] Headphones assemblies according to the present disclosure can comprise a variety of different components. FIGS. **1**A and **1**B display headphone assembly **100**. Headphone assembly **100** comprises several different components, such as headband **110**, headband pad **120**, left cup assembly **130**, and right cup assembly **140**.

[0067] The relative position of each component headphone assembly **100** is also important. Therefore, FIG. **1**C provides a view of the component positions of headphone assembly **100**. FIG. **1**C also identifies some of the individual components of left cup assembly **130**, such as sphere cup **152**, sphere magnet **154**, sphere insert **156**, cup **158**, speaker driver **170**, diaphragm **172**, ear pad **178**, and connector **180**.

[0068] In order to properly display each of the components present in the cup assemblies, FIG. **2** provides an exploded view of left cup assembly **130**. As shown in FIG. **2**, left cup assembly **130** comprises sphere cup **152**, sphere magnet **154**, sphere insert **156**, cup **158**, tip cover **160**, speaker driver **170**, diaphragm **172**, sound board **174**, sound board cover **176**, ear pad **178**, and connector **180**.

[0069] Embodiments according to the present disclosure can have novel attachment components and/or mechanisms. FIG. **3** provides a close-up view of attachment assembly **150**. As shown in FIG. **3**, attachment assembly **150** comprises headband **110**, sphere cup **152**, sphere magnet **154**, sphere insert **156**, and cup **158**. More specifically, cup **158** can comprise an indentation, wherein sphere cup **152**, sphere magnet **154**, and/or sphere insert **156**, fit inside this indentation. Further, headband **110** can fit on or around the sphere cup **152**, sphere magnet **154**, and/or sphere insert **156**.

[0070] In some embodiments according to the present disclosure, cup **158** can comprise an indentation, wherein sphere cup **152** fits inside this indentation. The opening in sphere cup **152** can face outward in a direction away from cup **158**. Sphere magnet **154** and sphere insert **156** can each be placed in this opening, such that sphere magnet **154** and sphere insert **156** can each fit inside of sphere cup **152**. Accordingly, sphere cup **152**, sphere magnet **154**, and sphere insert **156** can each fit inside cup **158**.

[0071] In some embodiments, sphere cup **152** can be in a fixed position inside cup **158**. For example, sphere cup **152** can be held in place with an adhesive or mechanical fastener. In this manner, the sphere cup **152** will not move from its position in cup **158**. Likewise, sphere magnet **154** and sphere insert **156** can be in a fixed position inside sphere cup **152**. Sphere magnet **154** and sphere insert **156** can also be held in place with an adhesive or mechanical fastener. In some embodiments, the adhesive can be glue; however, it is understood that any number of adhesives are acceptable.

[0072] Headband **110** can be attached to, and/or fit on, over, or around, sphere cup **152**, sphere magnet **154**, and sphere insert **156**. In some embodiments according to the present disclosure, headband **110** can be attached to sphere cup **152**, sphere magnet **154**, and/or sphere insert **156** with a magnetic force. For instance, headband **110** can be attached to the rest of attachment assembly **150** with the force of sphere magnet **154**. Accordingly, headband **110** can preferably be made of a material that is capable of being held by a magnetic force, such as a metal or metallic material. In this manner, headband **110** can be detachable and/or removable from sphere cup **152**, sphere magnet **154**, and/or sphere insert **156**.

[0073] Embodiments according to the present disclosure can maximize and/or improve the versatility and movement of the device with novel and improved component shapes and configurations. For instance, components described herein can form advantageous structures, such as a ball and socket joint. As shown in FIG. **3**, headband **110**, sphere cup **152**, sphere magnet **154**, and sphere insert **156** can combine to form a type of ball and socket joint. Specifically, headband **110** can form a concave or cup-like structure, while sphere magnet **154** and the outer portion of sphere cup **152** can form a convex or ball-like shape. Indeed, FIG. **3** displays that sphere magnet **154** and the outer portion of sphere cup **152** can fit into the concave shape of headband **110**. Accordingly, this structure can form a type of ball and socket joint.

[0074] The structure of the headband **110**, sphere cup **152**, sphere magnet **154**, and/or sphere insert **156**, e.g. the ball and socket joint, can comprise a number of advantages to headphone assemblies according to the present disclosure. In some embodiments, this structure can optimize and improve component movement, efficiency, and/or performance. Indeed, the spherical design of the structure can make the headband freely movable and/or detachable. For instance, the spherical design allows the headband to attain a full freedom of movement when attached to the sphere cup **152**, sphere magnet **154**, and/or sphere insert **156**. This design also allows for improved user comfort when wearing the headphone assembly, as the headband can move in any spherical direction. Further, this design can allow the headband **110** and sphere cup **152**, sphere magnet **154**, and/or sphere insert **156** to freely move in many directions, which can provide users with an increased ability to optimize component positioning and/or performance, as well as provide an improved user experience.

[0075] Additionally, the structure of the headband **110**, sphere cup **152**, sphere magnet **154**, and/or sphere insert **156** can provide a novel manner in which to foster component adjustability. For instance, the spherical design allows users to freely move the aforementioned components in many directions. This component adjustability can allow the headphone assembly to provide adjustable shapes and/or sizes, which can help to facilitate the transition to differently shaped users. In turn, this can improve the headphone efficiency and comfort. In addition, the removable and/or adjustable aspect of the headband **110**, sphere cup **152**, sphere magnet **154**, and/or sphere insert **156** can provide headphone users with increased mobility and/or flexibility.

[0076] Headphone components herein can facilitate the positioning of other components that contribute to the detachability and/or adjustability of the headphone assembly. FIG. **4** displays one embodiment of a sphere cup **152** according to the present disclosure. As shown in FIG. **4**, sphere cup **152** can have a cup shape, wherein sphere magnet **154** and/or sphere insert **156** fit inside sphere cup **152**. As mentioned previously, sphere cup **152** can likewise fit inside of cup **158**, such that sphere cup **152**, sphere magnet **154**, and/or sphere insert **156** can each fit inside cup **158**. In some embodiments, sphere cup **152** can have a spherical shape, such that it contributes to the aforemen-

tioned spherical design and increased mobility and/or flexibility of the headphone assembly. Sphere cup **152** can also be referred to as an attachment cup, cup, and/or any other appropriate term.

[0077] Sphere cup **152** can comprise a metal or metallic material. Further, sphere cup **152** can comprise a material that can allow flux to sufficiently flow through it, such as an alloy, or more specifically a highly magnetic permeable iron alloy. For example, sphere cup **152** can comprise stainless steel. In these instances, the stainless steel can be a highly magnetic permeable ferritic or martensitic alloy. However, it is understood that sphere cup **152** can comprise any number of appropriate materials.

[0078] Headphone components herein can contribute to the detachability and/or adjustability of the headphone assembly. FIG. **5** shows one embodiment of a sphere magnet **154** according to the present disclosure. Some embodiments include sphere magnet **154** fitting inside sphere cup **152**, which in turn fits inside cup **158**. As described herein, sphere magnet **154** can provide the force to attach or detach headband **110** from the rest of components, namely cup **158**, sphere cup **152**, sphere magnet **154**, and/or sphere insert **156**. In some embodiments, sphere magnet **154** comprises a convex or rounded shape around the exterior, such that it has the appearance of a ball. Further, headband **110** can comprise a concave or cup-like shape, such that headband **110** can fit around and/or over sphere magnet **154**, forming a ball and socket shape. In other embodiments sphere magnet **154** comprises a concave or cup-like shape around the exterior, while headband **110** can comprise a convex or ball-like shape.

[0079] Some embodiments of the present disclosure comprise a sphere magnet **154** that is relatively powerful. For instance, the magnetic force of sphere magnet **154** can be strong because there is no magnetic air gap between the sphere cup **152** and sphere magnet **154** to reduce permeability. Additionally, because the magnetic force can be strong, sphere magnet **154** can be relatively light weight to reach the target magnetic level. In some embodiments, sphere magnet **154** can be smaller in size and lower in price than comparable magnets. Accordingly, sphere magnet **154** can reduce the overall size of the headphone assembly, as well as reduce the overall production cost. Sphere magnet **154** can also be referred to as attachment magnet, magnet, and/or any other appropriate term.

[0080] Sphere magnet **154** can comprise a number of different permanent magnet materials. In some instances, sphere magnet **154** can comprise an NdFeB alloy, which is commonly called rare earth neodymium magnet. It is understood that sphere magnet **154** can comprise any appropriate type of magnetic material, such as Ferrite, Neodymium, Samarium Cobalt, AlNiCo, electromagnet, ceramic, and/or any other appropriate material.

[0081] Headphone components according to the present disclosure can also assist other headphone assembly components to be positioned properly. FIG. **6** displays one embodiment of a sphere insert **156** according to the present disclosure. Sphere insert **156** can also be referred to as attachment insert, nylon insert, sphere nylon insert, insert, and/or any other appropriate term. In some embodiments, sphere insert **156** can be on sphere magnet **154**. Sphere insert **156** can also be at least partially around sphere magnet **154**, such that sphere insert **156** can be between sphere magnet **154** and sphere cup **152**. Sphere insert **156** can also be on headband **110**. It is understood that sphere insert can be on, and contacting, a number of different components, such as sphere magnet **154**, sphere cup **152**, headband **110**, and/or cup **158**.

[0082] Sphere insert **156** can comprise a number of different materials, such as nylon, rubber, plastic, non-magnetic metal, or a non-magnetic metallic material. However, it is understood that sphere insert **156** can comprise any number of appropriate materials.

[0083] Headphone components according to the present disclosure can also be detachable and/or adjustable, which contributes to the overall user satisfaction of the headphone assembly. FIG. **7** displays one embodiment of a headband **110** according to the present disclosure. As described herein, along with cup **158**, sphere cup **152**, sphere magnet **154**, and sphere insert **156**, headband **110** can be a part of attachment assembly **150**. The shape of the connection and detachment points of the attachment assembly can be designed to increase the adjustability of the headphone assembly. For instance, the structure can be spherically designed to make the headband freely movable and/or detachable. This spherical design can allows the headband **110** to attain a full freedom of movement when attached to the sphere cup **152**, sphere magnet **154**, sphere insert **156**, and/or cup **158**. This design also allows for improved user comfort when wearing the headphone assembly, as the headband **110** can move in any spherical direction. Further, this design can allow the headband **110** to freely move in many directions, which can provide users with an increased ability to optimize component adjustability, positioning, and/or performance, which in turn provides for an improved overall user experience.

[0084] In some embodiments, headband **110** is attached to the other headphone components by a purely magnetic force, such as through the force of sphere magnet **154**. In other embodiments, headband **110** is attached to the other headphone components by partially magnetic force and partially other non-magnetic forces, such as an adhesive or clamp. In yet other embodiments, headband **110** can be attached by a completely non-magnetic force. It is understood that headband **110** can be attached to other headphone components by any number of appropriate forces.

[0085] As described herein, headband **110** can comprise a number of different shapes, which preferably conform to the aforementioned spherical design. For instance, headband **110** can comprise a concave or cup-like shape, such that headband **110** can fit around and/or over sphere magnet **154**. This type of shape is described herein as forming a ball and socket shape. In other embodiments, headband **110** can comprise a convex or ball-like shape, while sphere magnet **154** can comprises a concave or cup-like shape around the exterior of headband **110**. Headband **110** can substantially form around the shape of the sphere magnet **154** and/or sphere cup **152**, such that the components are essentially form fitting over and/or around one another. This can improve the connection and fit of the components, as well as reduce the need for the sphere magnet **154** to be large or powerful, which in turn reduces the size and cost of the headphone assembly.

[0086] Headband **110** can comprise a material that is capable of being held by a magnetic force, such as a metal or metallic material. Furthermore, headband **110** can comprise a material that can allow flux to sufficiently flow through it, such as an alloy, or more specifically a highly magnetic permeable iron alloy. For example, headband **110**

can comprise stainless steel. In these instances, the stainless steel can be a highly magnetic permeable ferritic or martensitic alloy. However, it is understood that headband **110** can comprise any number of appropriate materials. As shown in FIGS. **1**A-**1**C, in addition to headband **110**, headphone assembly can also comprise headband pad **120**. Headband pad **120** can comprise any number of appropriate materials that provide a pad-like effect and improve user comfort.

[0087] Headband **110** can also comprise a spring-like effect, such that it can expand and/or contract to the shape of the user. As such, headband **110** can comprise any number of different spring-like materials to accommodate this feature. Additionally, headband **110** can comprise a spring component. The spring can help clamp the headphone to the user's head. In some embodiments, friction between the ear pad and the headband can hold it in position. The spring force can be balanced between light enough for ideal user comfort and strong enough to hold the headband in position. The spring can also have a long linear force range to accommodate different head widths. As such, headband **110** can have a leaf spring along its length for ideal linear spring force.

[0088] Headphone components according to the present disclosure can also facilitate the storage and/or placement of other components. FIGS. **8**A and **8**B display cup **158** according to one embodiment of the present disclosure. Cup **158** can also be referred to as speaker cup, headphone cup, or any other appropriate term. As most headphone assemblies comprise two speakers, cup **158** can be part of left cup assembly **130** and/or right cup assembly **140**, as shown in FIGS. **1**A-**1**C. As shown in FIG. **3**, cup **158** can hold or position the other components in attachment assembly **150**. Indeed, sphere cup **152** can fit inside of cup **158**. As sphere magnet **154** and/or sphere insert **156** can each fit inside sphere cup **152**, each of sphere cup **152**, sphere magnet **154**, and/or sphere insert **156** can fit on or inside cup **158**. In some embodiments, headband **110** can be on or contact cup **158**.

[0089] Cup **158** can comprise a variety of appropriate materials, such a carbon fiber. More specifically, some cup embodiments of the present disclosure can comprise black twill carbon fiber with a high impact strength resin. In some embodiments, cup **158** can comprise a nominal wall thickness of 0.75 mm and a mass of approximately 20 grams. Cup **158** can also comprise a polymer material such as plastic or thermoset plastic, with or without reinforcement fibers or particles. Cup **158** can also comprise an organic material such as wood or other cellulose fibers. Cup **158** can also comprise a metal or metallic material such as aluminum, magnesium, stainless steel or liquid metal. However, it is understood that cups according to the present disclosure can comprise any number of appropriate materials, weight, and/or dimensions.

[0090] Headphone assemblies according to the present disclosure can also comprise pads and/or cover components. FIG. **9** displays one embodiment of tip cover **160** according to the present disclosure. Tip cover **160** can comprise wool felt or any appropriate pad-like material. Tip cover **160** can also comprise a natural cream color. In some embodiments, tip cover **160** can weigh 1.54 grams. It is understood that tip covers according to the present disclosure can comprise any appropriate material, weight, or dimension.

[0091] Embodiments according to the present disclosure can also comprise components that have sound dampening capabilities. FIG. **10** displays one embodiment of diaphragm **172** according to the present disclosure. Diaphragm **172** can comprise an accordion type shape to diffuse sound reflections, as well as provide a soft spring compliance. Furthermore, the shape of the diaphragm can be round so that it acts as a floating dipole membrane inside of an elliptical cup, so as not to cause a Helmholtz resonance. Diaphragm **172** can comprise a variety of appropriate materials, such as rubber, or more specifically high vibration loss rubber. As diaphragm **172** can have dampening capabilities, it can also be referred to as a dampening diaphragm. In some embodiments, the diaphragm can be 0.5 mm thick and have a diameter of around 66 mm. Moreover, the diaphragm can have a mass of approximately 152 grams. It is understood that diaphragms according to the present disclosure can comprise any appropriate material, weight, or dimension.

[0092] The present disclosure also provides novel sound boards and similar components. FIG. **11** displays sound board **174**. In some embodiments, sound board can comprise a natural color finish and a clear satin powder coat. Sound board **174** can also comprise magnesium and/or aluminum, wherein specific embodiments can have 23.7 grams and 37.4 grams of each material, respectively. Sound board **174** can also comprise a composite material such as carbon fiber, plastic, wood, metal or liquid metal. In some embodiments, sound board **174** can comprise a nominal wall thickness of 1.5 mm. FIG. **12** displays sound board cover **176**, which can comprise wool felt or cotton felt and a natural cream color. In some embodiments, sound board cover **176** can weigh 1.46 grams. It is understood that sound boards and sound board covers according to the present disclosure can comprise any appropriate material, weight, or dimension.

[0093] Headphone assemblies according to the present disclosure can also comprise additional pads and/or cover components. FIG. **13** displays one embodiment of ear pad **178** according to the present disclosure. Ear pad **178** can comprise memory foam, such as a high resilient memory foam and/or a soft, low density foam with characteristics of around three pounds per cubic feet. Some embodiments of ear pads can also comprise black sheep glove leather covers. In some embodiments, ear pads according to the present disclosure can weigh around 1 gram. It is understood that ear pads according to the present disclosure can comprise any appropriate material or dimension.

[0094] Embodiments according to the present disclosure can also comprise different types of attachment components and/or mechanisms. For instance, embodiments according to the present disclosure can utilize an air gap. FIG. **14**A displays headphone assembly **200**. The relative position of each component headphone assembly **200** is important, so FIG. **14**A provides a view of the component positions of headphone assembly **200**. Headphone assembly **200** comprises several different components, such as headband **210**, headband pad **220**, left cup assembly **230**, and right cup assembly **240**. FIG. **14**A also identifies some of the individual components of left cup assembly **230**, including tip bearing **252**, tip magnet **254**, tip pole **256**, cup **258**, speaker driver **270**, diaphragm **272**, ear pad **278**, and connector **280**.

[0095] FIG. **14**B provides a close-up view of attachment assembly **250**. As shown in FIG. **14**B, attachment assembly **250** comprises headband **210**, tip bearing **252**, tip magnet **254**, tip pole **256**, and cup **258**. More specifically, cup **258** can comprise an indentation, wherein tip bearing **252**, tip magnet **254**, and/or tip pole **256** can fit inside this indenta-

tion. Furthermore, headband **210** can fit on or around the tip bearing **252**, tip magnet **254**, and/or tip pole **256**.

[0096] As mentioned previously, attachment assembly **250** can utilize an air gap. For example, one side or pole of tip magnet **254** can face the headband **210**. The opposite side or pole of tip magnet **254** can pass through low permeability air gap, which can complete the magnetic circuit of flux flowing through the headband **210**. This aspect of attachment assembly **250** can help the components attach to one another. One advantage of this type of attachment assembly is that the components can be a relatively simple shape, which can lower production costs.

[0097] As mentioned above, the tip of the left cup assembly **230** comprises several components, such as a tip bearing, tip magnet, and/or tip pole. FIG. **14**C displays tip bearing **252**. Tip bearing **252** can comprise a type of steel material, such as 409 stainless steel, and have a satin finish. In some embodiments, tip bearing **252** can weigh 8.7 grams. FIG. **14**D displays tip magnet **254**, which can comprise a nickel material with a black coat, as well as be magnetized with license. In some embodiments, tip magnet **254** can weigh 14.3 grams. FIG. **14**E displays tip pole **256**, which can also comprise a steel material, such as 409 stainless steel, and have a satin finish. In some embodiments, tip pole **256** can weigh 7.6 grams. It is understood that tip magnets, bearings, and/or poles according to the present disclosure can comprise any appropriate material, weight, or dimension. FIG. **14**F provides a more complete view of headband **210**.

[0098] Embodiments according to the present disclosure can also comprise inverted attachment components and/or mechanisms. For example, FIG. **15**A provides a close-up view of attachment assembly **350**. As shown in FIG. **15**A, attachment assembly **350** comprises headband **310**, sphere cup **352**, sphere magnet **354**, and cup **358**. FIGS. **15**B-**15**D display sphere cup **352**, sphere magnet **354**, and headband **310**, respectively.

[0099] In the embodiment shown in FIG. **15**A, the headband **310** is a convex or ball-like shape, while the sphere magnet **354** is a concave or cup-like shape. Accordingly, the embodiment shown in FIG. **15**A can be referred to as inverted, especially when compared to the embodiment in FIG. **3**. As indicated previously, cup **358** can comprise an indentation, wherein sphere cup **352** and/or sphere magnet **354** can fit inside this indentation. Moreover, headband **310** can fit on or inside the sphere cup **352** and/or sphere magnet **354**. In some embodiments, the opening in sphere cup **352** can face outward in a direction away from cup **358**. Sphere magnet **354** can be placed in this opening, such that sphere magnet **354** can fit inside of sphere cup **352**. Accordingly, each of sphere cup **352** and sphere magnet **354** can fit inside cup **358**.

[0100] Embodiments according to the present disclosure can also comprise different inverted attachment components and/or mechanisms. FIG. **16**A provides a close-up view of attachment assembly **450**. As shown in FIG. **16**A, attachment assembly **450** comprises headband **410**, tip bearing **452**, tip magnet **454**, tip pole **456**, and cup **458**. FIGS. **16**B-**16**E display tip bearing **452**, tip magnet **454**, tip pole **456**, and headband **410**, respectively.

[0101] In the embodiment shown in FIG. **16**A, the headband **410** is a convex or ball-like shape, while the tip bearing **452** is a concave or cup-like shape. As such, the embodiment shown in FIG. **16**A can be referred to as inverted, especially when compared to the embodiment in FIG. **14**A. Additionally, cup **458** can comprise an indentation, wherein tip bearing **452**, tip magnet **454**, and/or tip pole **456** can fit inside this indentation. Moreover, headband **410** can fit on or inside the tip bearing **452**, tip magnet **454**, and/or tip pole **456**.

[0102] Embodiments according to the present disclosure can also comprise attachment components and/or mechanisms that utilize a ring-like shape. FIG. **17**A provides a close-up view of attachment assembly **550**. As shown in FIG. **17**A, attachment assembly **550** comprises headband **510**, tip bearing **552**, tip magnet **554**, tip pole **556**, and cup **558**. FIGS. **17**B-**17**E display tip bearing **552**, tip magnet **554**, tip pole **556**, and headband **510**, respectively.

[0103] As shown in FIGS. **17**A-**17**C, tip bearing **552** and tip magnet **554** can form a ring-like shape. Further, tip pole **556** can form a type of pole shape on one side. Accordingly, tip bearing **552** and tip magnet **554** can fit over and around tip pole **556**, such that the structure can resemble rings over a pole. In addition, cup **558** can comprise an indentation, wherein tip bearing **552**, tip magnet **554**, and/or tip pole **556** can fit inside this indentation. Further, headband **510** can fit on or around the tip bearing **552**, tip magnet **554**, and/or tip pole **556**. More specifically, in the embodiment shown in FIG. **17**A, the headband **510** is a concave or cup-like shape, while the tip pole **556** is a convex or ball-like shape. In this manner, attachment assembly **550** can resemble the ball and socket-like structure described previously.

[0104] Embodiments according to the present disclosure can also comprise attachment components and/or mechanisms that utilize inverted ring-like shapes. FIG. **18**A provides a close-up view of attachment assembly **650**. As shown in FIG. **18**A, attachment assembly **650** comprises headband **610**, tip bearing **652**, tip magnet **654**, tip pole **656**, and cup **658**. FIGS. **18**B-**18**E display tip bearing **652**, tip magnet **654**, tip pole **656**, and headband **610**, respectively. In the embodiment shown in FIG. **18**A, the headband **610** is a convex or ball-like shape, while the tip pole **656** is a concave or cup-like shape. As such, the embodiment shown in FIG. **18**A can be referred to as inverted, especially when compared to the embodiment in FIG. **17**A.

[0105] It is understood that embodiments presented herein are meant to be exemplary. Embodiments of the present disclosure can comprise any combination of compatible features shown in the various figures, and these embodiments should not be limited to those expressly illustrated and discussed.

[0106] Although the present disclosure has been described in detail with reference to certain configurations thereof, other versions are possible. Therefore, the spirit and scope of the disclosure should not be limited to the versions described above.

[0107] The foregoing is intended to cover all modifications and alternative constructions falling within the spirit and scope of the disclosure as expressed in the appended claims, wherein no portion of the disclosure is intended, expressly or implicitly, to be dedicated to the public domain if not set forth in the claims.

We claim:

1. A headphone assembly, comprising:

at least one speaker cup;

an attachment cup on at least a portion of said speaker cup;

an attachment magnet on at least a portion of said attachment cup; and

a headband on said attachment magnet.

2. The headphone assembly of claim **1**, wherein said headband is detachably attached to said attachment magnet with a magnetic force.

3. The headphone assembly of claim **1**, wherein said headband substantially forms around the shape of said attachment magnet.

4. The headphone assembly of claim **1**, further comprising an attachment insert on at least a portion of said attachment magnet.

5. The headphone assembly of claim **4**, wherein said attachment insert is at least partially around said attachment magnet.

6. The headphone assembly of claim **1**, wherein said attachment cup is at least partially inside a portion of said speaker cup.

7. The headphone assembly of claim **1**, wherein said attachment magnet is at least partially inside a portion of said attachment cup.

8. The headphone assembly of claim **1**, wherein said headband is on said attachment cup.

9. A headphone assembly, comprising:

at least one attachment assembly, comprising:

a speaker cup;

a sphere cup on said speaker cup;

an attachment device on said sphere cup; and

a headband on said attachment device;

wherein said headband substantially forms around the shape of said attachment device.

10. The headphone assembly of claim **9**, wherein the exterior of said attachment device comprises a convex shape.

11. The headphone assembly of claim **9**, wherein the exterior of said attachment device comprises a concave shape.

12. The headphone assembly of claim **9**, wherein said attachment device comprises a magnetic force.

13. The headphone assembly of claim **9**, wherein said headband is detachably on said attachment device.

14. The headphone assembly of claim **9**, further comprising an attachment insert on at least a portion of said attachment device.

15. The headphone assembly of claim **9**, wherein said sphere cup is at least partially inside a portion of said speaker cup.

16. The headphone assembly of claim **9**, wherein said attachment device is at least partially inside a portion of said sphere cup.

17. A headphone assembly, comprising:

a left cup assembly and a right cup assembly, each cup assembly comprising:

a speaker cup;

an attachment cup on at least a portion of said speaker cup; and

an attachment device on at least a portion of said attachment cup;

a headband comprising a left attachment portion and a right attachment portion;

wherein said left and right attachment portions are detachably on said left and right cup assemblies, respectively.

18. The headphone assembly of claim **17**, wherein said attachment device comprises a magnetic force.

19. The headphone assembly of claim **17**, further comprising an attachment insert on at least a portion of said attachment device.

20. The headphone assembly of claim **17**, wherein said attachment cup is at least partially inside a portion of said speaker cup.

* * * * *