US 20160329041A1

(19) United States

(12) Patent Application Publication

(10) Pub. No.: US 2016/0329041 A1

(43) Pub. Date: Nov. 10, 2016

QI et al.

(54) **SYSTEMS AND METHODS FOR SUPPRESSING SOUND LEAKAGE**

(71) Applicant: **SHENZHEN VOXTECH CO., LTD.**, Shenzhen, Guangdong (CN)

(72) Inventors: **Xin QI**, Shenzhen, Guangdong (CN); **Fengyun LIAO**, Shenzhen, Guangdong (CN)

(73) Assignee: **SHENZHEN VOXTECH CO., LTD.**, Shenzhen, Guangdong (CN)

(21) Appl. No.: **15/109,831**

(22) PCT Filed: **Dec. 17, 2014**

(86) PCT No.: **PCT/CN2014/094065**

§ 371 (c)(1),
(2) Date: **Jul. 6, 2016**

(30) **Foreign Application Priority Data**

Jan. 6, 2014 (CN) 201410005804.0

Publication Classification

(51) **Int. Cl.**
G10K 11/178 (2006.01)
G10K 11/26 (2006.01)

(52) **U.S. Cl.**
CPC ***G10K 11/178*** (2013.01); ***G10K 11/26*** (2013.01); *H04R 2460/13* (2013.01); *G10K 2210/3216* (2013.01); *H04R 1/2876* (2013.01)

(57) **ABSTRACT**

The present invention provides a method for suppressing sound leakage of a bone conduction loudspeaker and the bone conduction loudspeaker capable of suppressing sound leakage. The bone conduction loudspeaker comprises an opening-shaped casing, a vibrating panel and a transduction device. The transduction device is used for producing vibration and is accommodated in the casing. The vibrating panel is used for being attached to the skin and transmitting vibration. At least part of the casing is provided with at least one sound transmitting hole. The sound transmitting hole is used for transmitting a sound wave formed by air vibration in the casing out of the casing, and the sound wave interferes with a leakage sound wave to reduce amplitude of the leakage sound wave, wherein the casing vibrates and pushes the air outside the casing to form the leakage sound wave. In the present invention, by means of the sound wave interference principle, the amplitude is reduced so as to achieve the effect of reducing sound leakage. The solution has good sound leakage suppressing effect and is easy to achieve, the size and weight of the bone conduction loudspeaker are not increased, and product cost is also hardly increased.

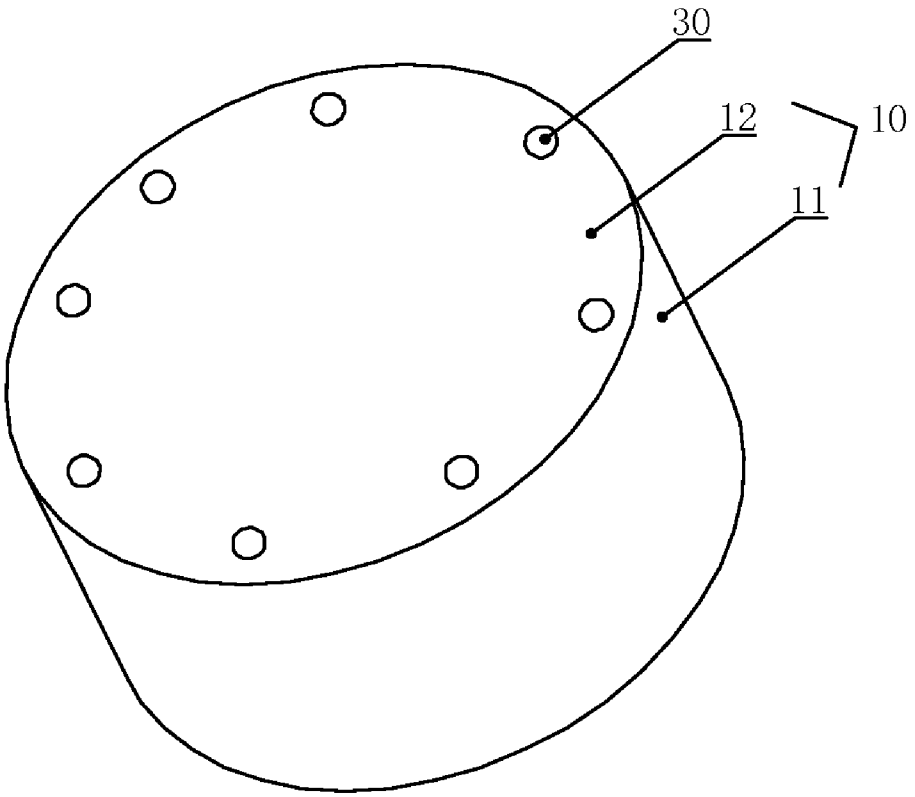

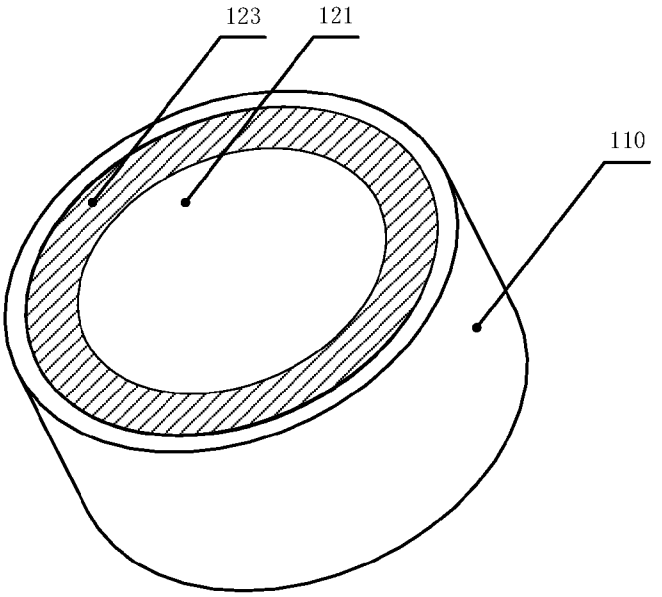

FIG. 1A

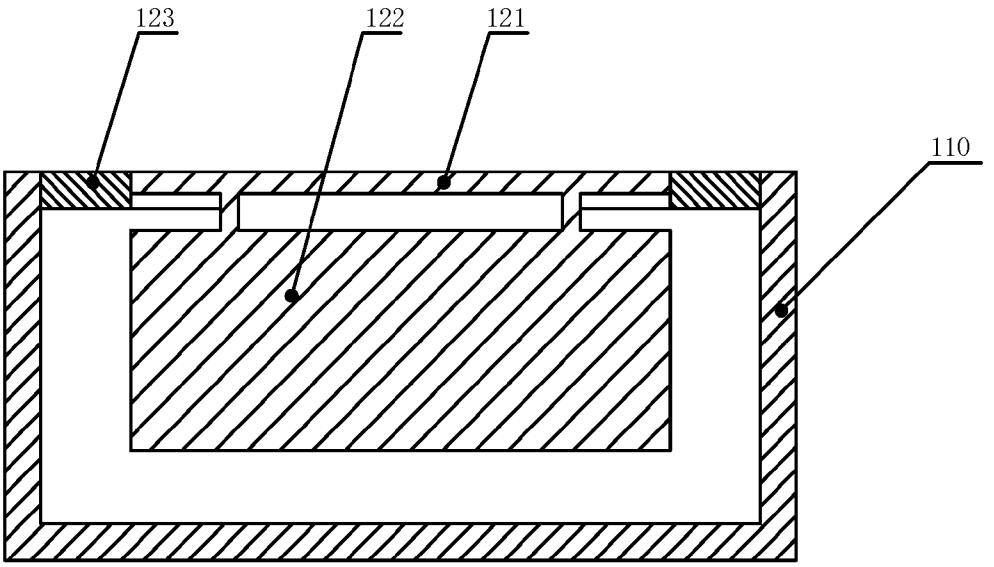

FIG. 1B

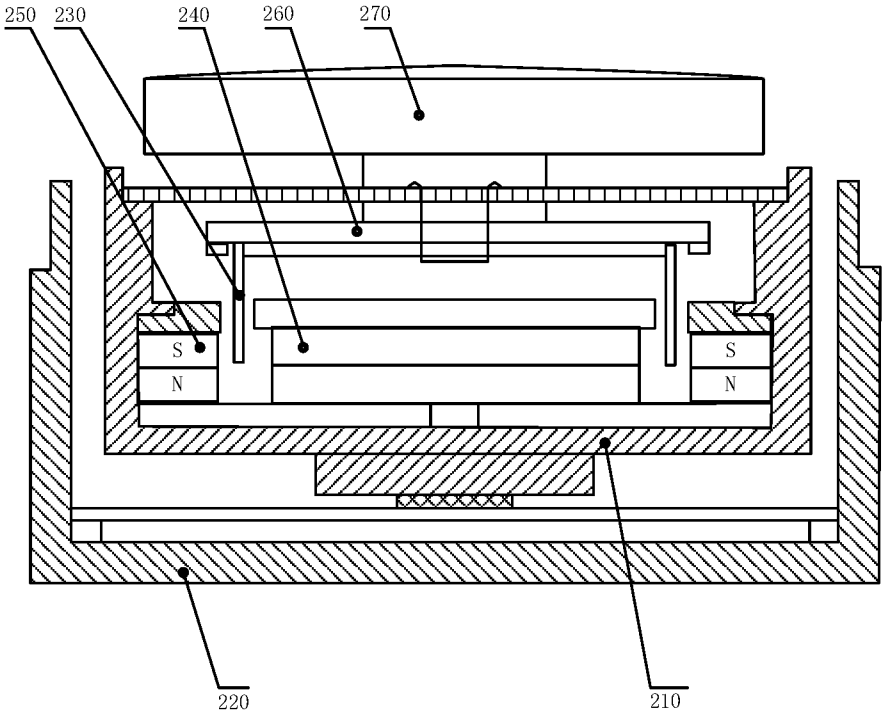
250
230
240
260
270
S
N
S
N
220
210

FIG. 2

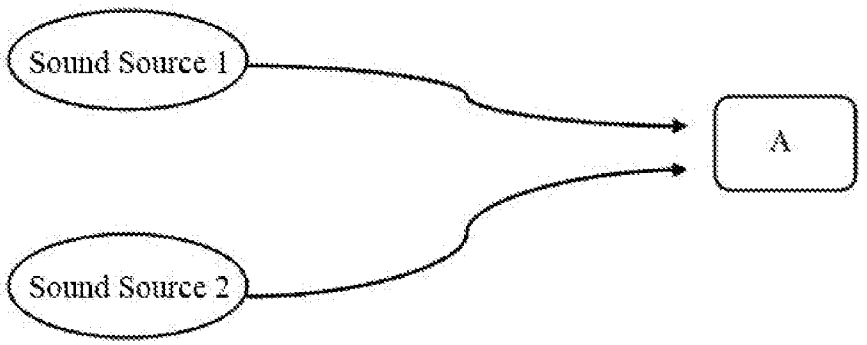
Sound Source 1
A
Sound Source 2

FIG. 3

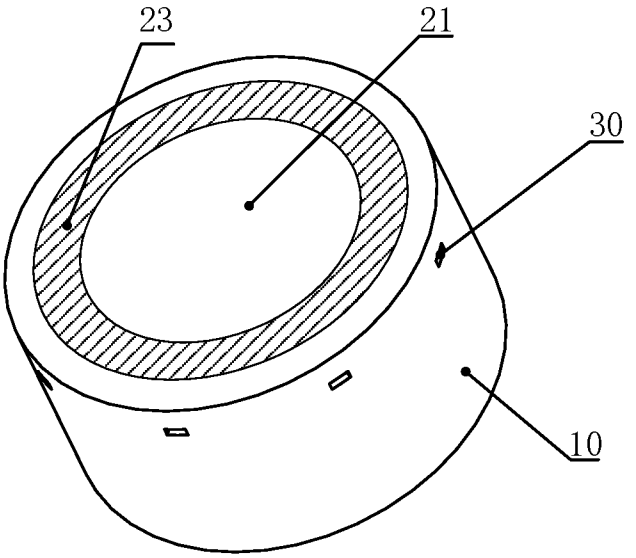

FIG. 4A

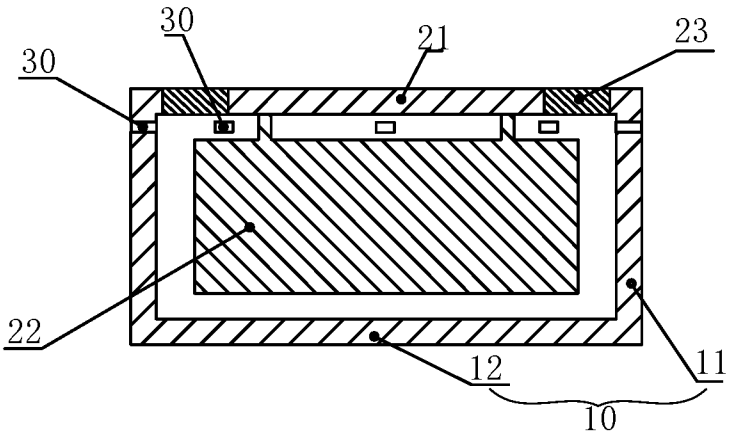

FIG. 4B

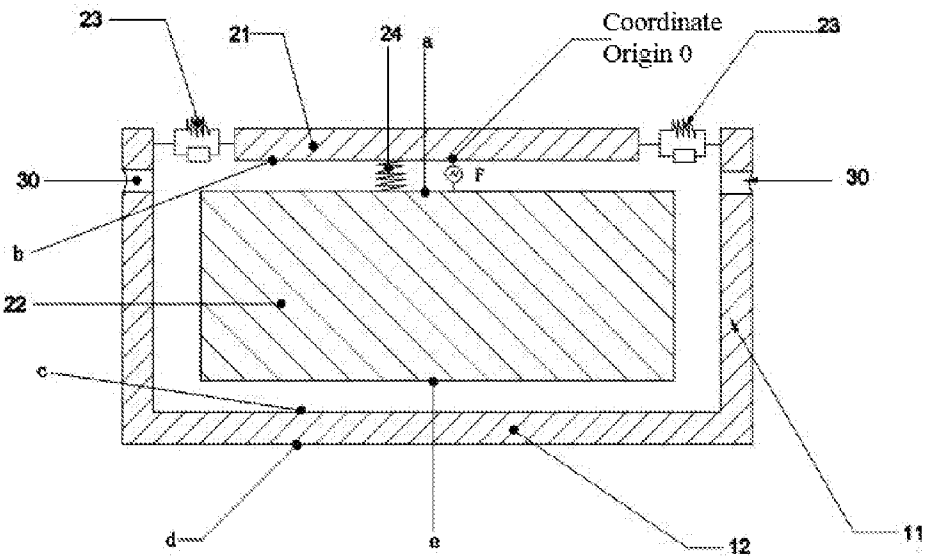
23
21
24
a
Coordinate
Origin 0
23
30
F
30
b
22
c
d
e
12
11

FIG. 4C

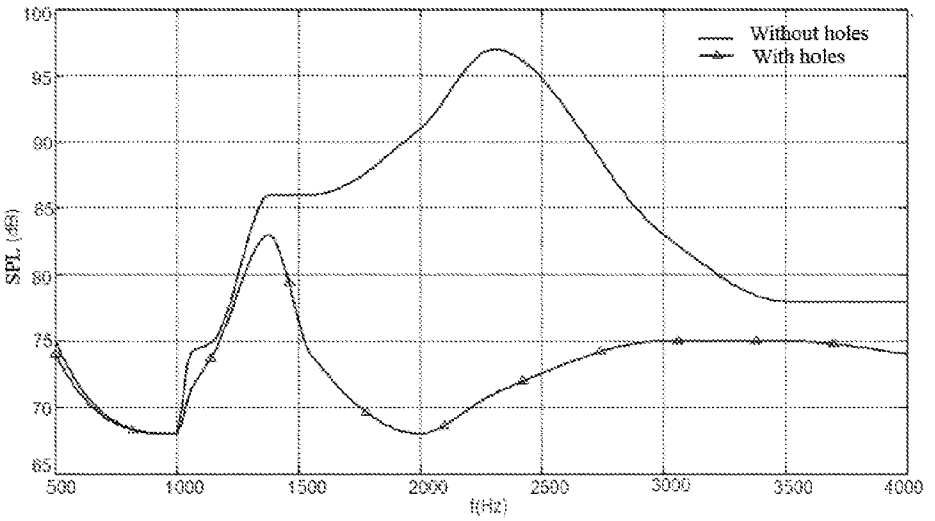
Without holes
With holes
SPL (dB)
f(Hz)
100
95
90
85
80
75
70
65
500
1000
1500
2000
2500
3000
3500
4000

FIG. 4D

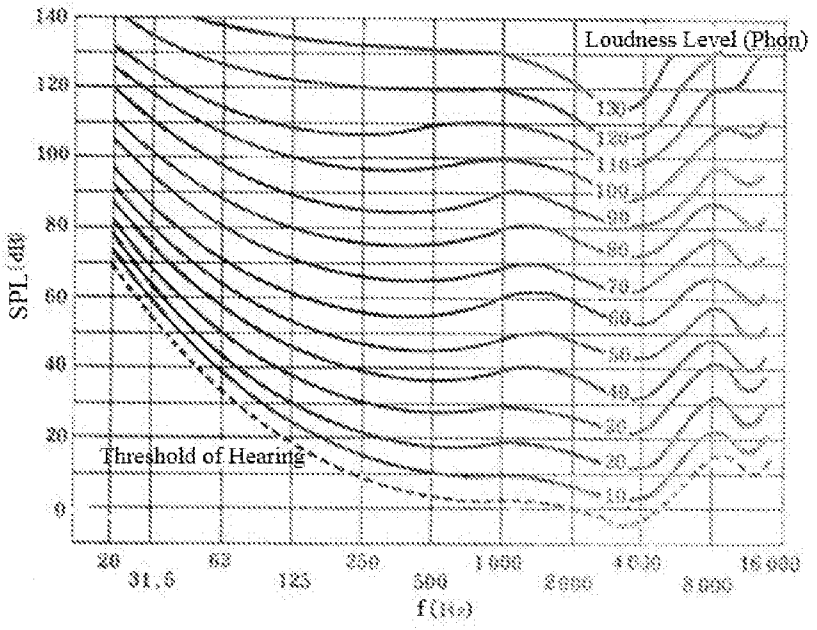
Loudness Level (Phon)
Threshold of Hearing
SPL (dB)
f (Hz)
140
120
100
80
60
40
20
0
20
31.5
63
125
250
500
1000
2000
4000
8000
16000

FIG. 5

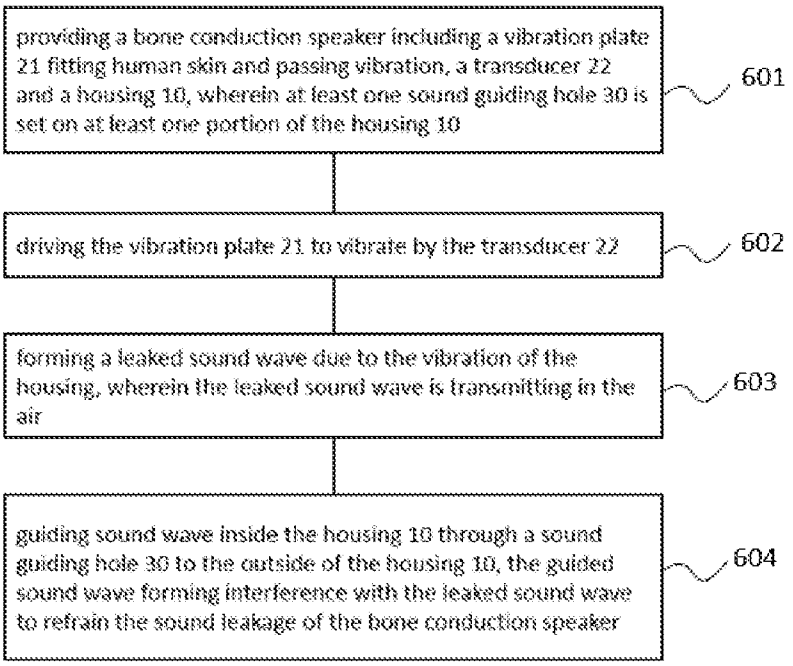
providing a bone conduction speaker including a vibration plate 21 fitting human skin and passing vibration, a transducer 22 and a housing 10, wherein at least one sound guiding hole 30 is set on at least one portion of the housing 10
601
driving the vibration plate 21 to vibrate by the transducer 22
602
forming a leaked sound wave due to the vibration of the housing, wherein the leaked sound wave is transmitting in the air
603
guiding sound wave inside the housing 10 through a sound guiding hole 30 to the outside of the housing 10, the guided sound wave forming interference with the leaked sound wave to refrain the sound leakage of the bone conduction speaker
604

FIG. 6

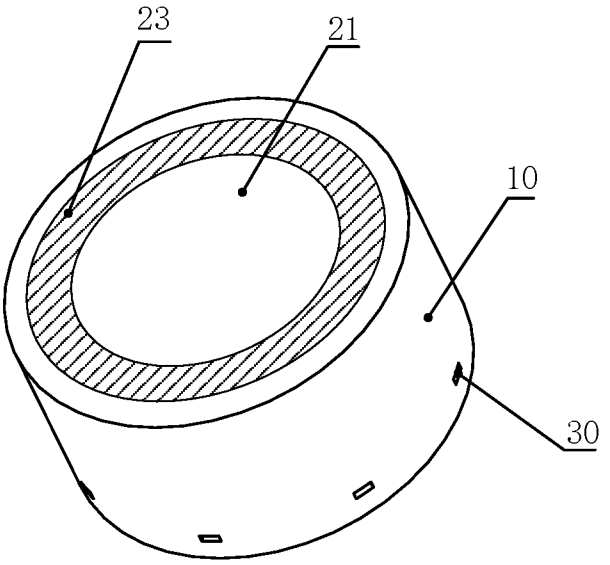

FIG. 7A

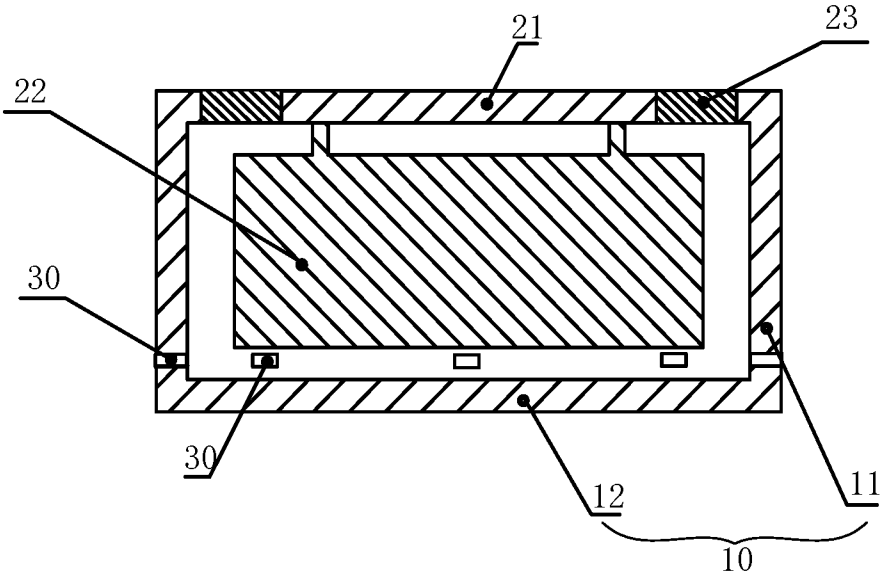

FIG. 7B

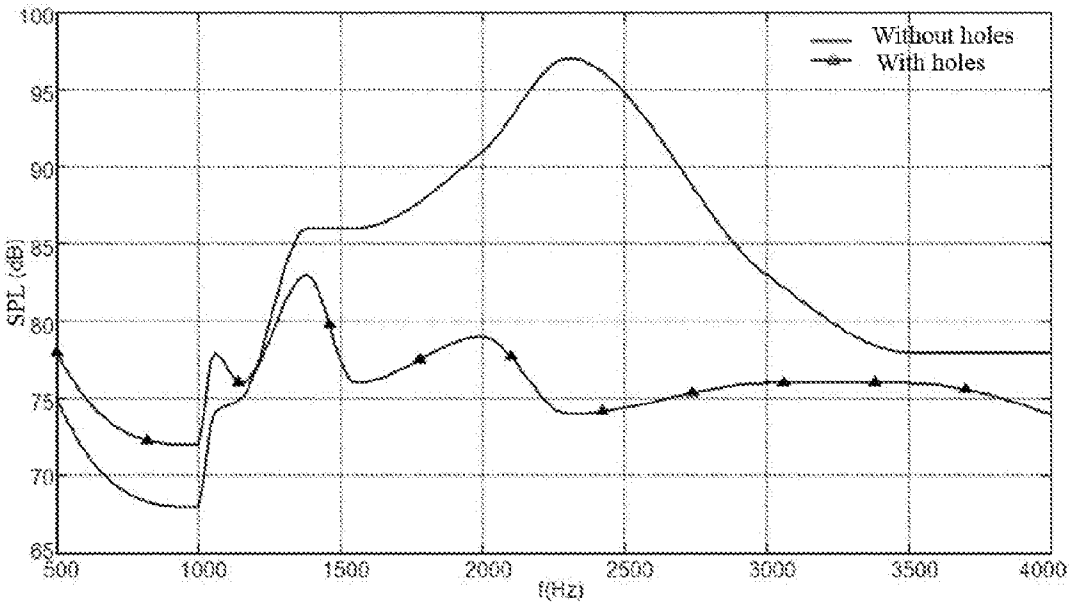
Without holes
With holes
SPL (dB)
f(Hz)
100
95
90
85
80
75
70
65
500
1000
1500
2000
2500
3000
3500
4000

FIG. 7C

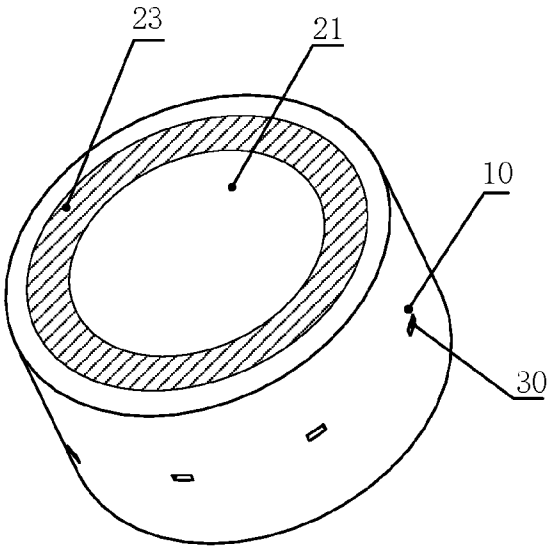
23
21
10
30

FIG. 8A

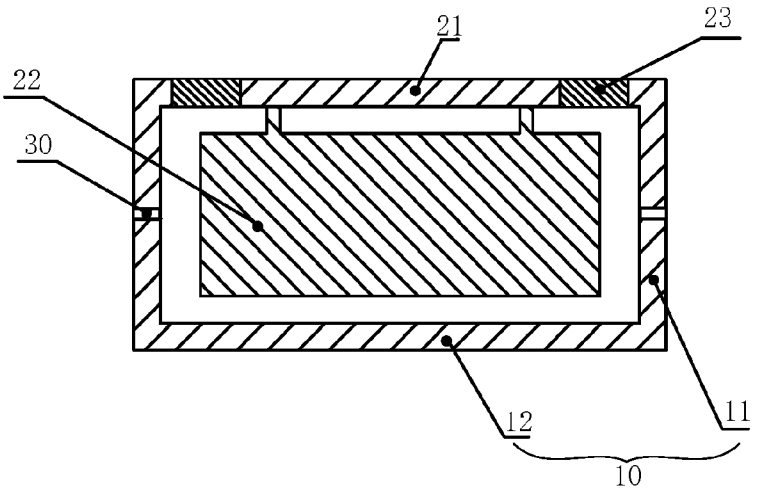
21
23
22
30
12
11
10

FIG. 8B

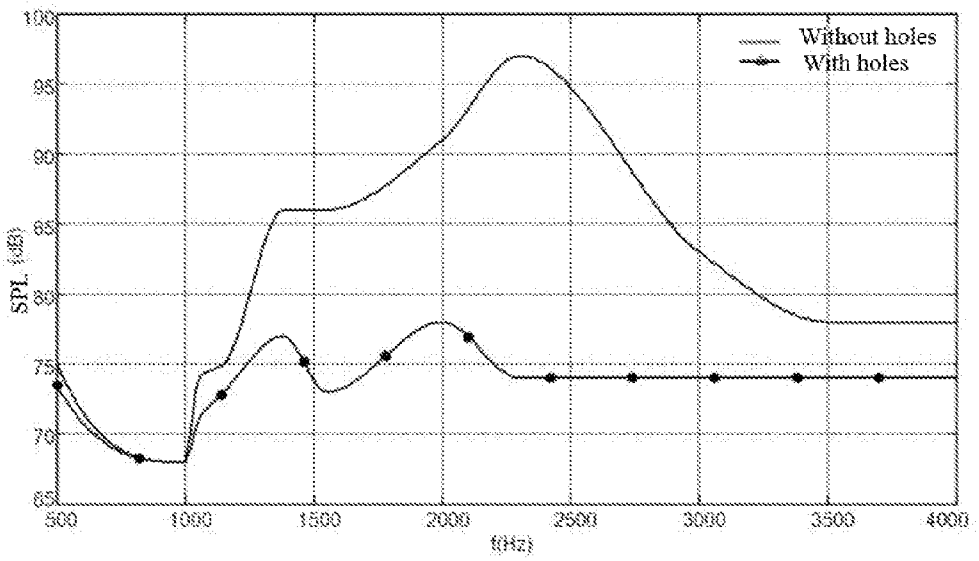
Without holes
With holes
SPL (dB)
f(Hz)
100
95
90
85
80
75
70
65
500
1000
1500
2000
2500
3000
3500
4000

FIG. 8C

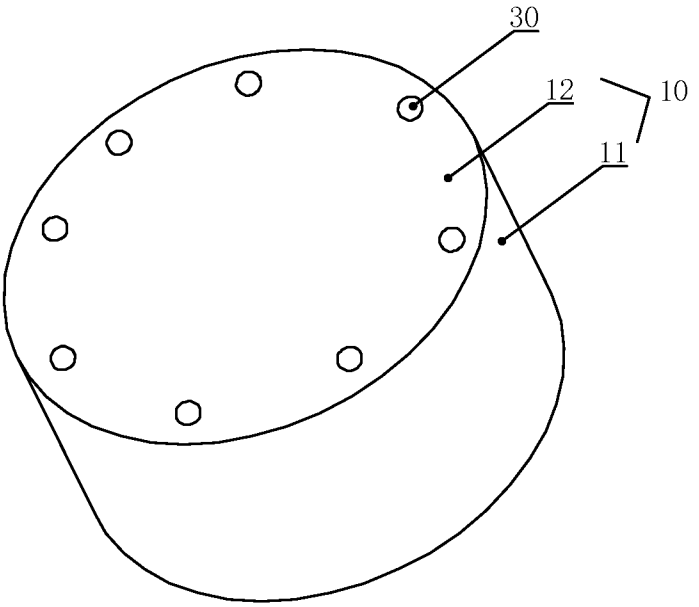

FIG. 9A

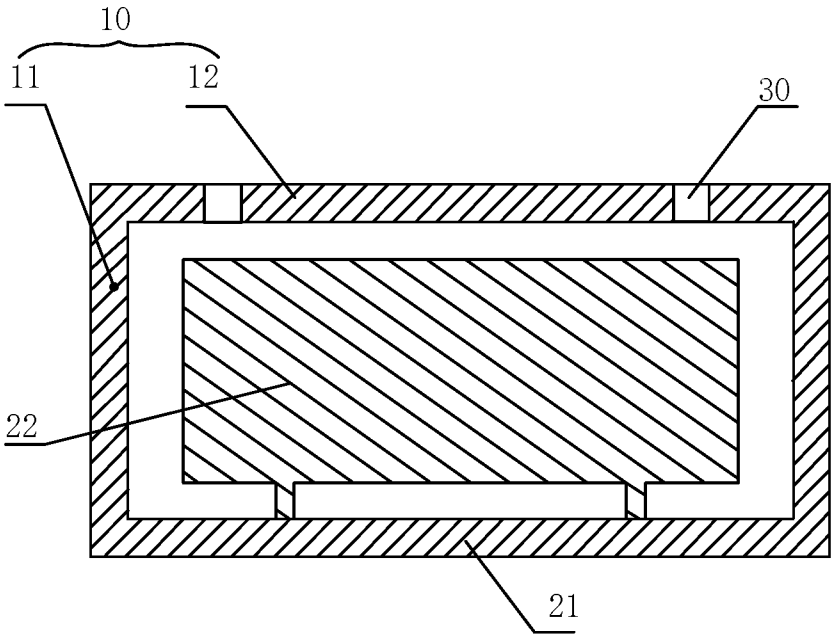

FIG. 9B

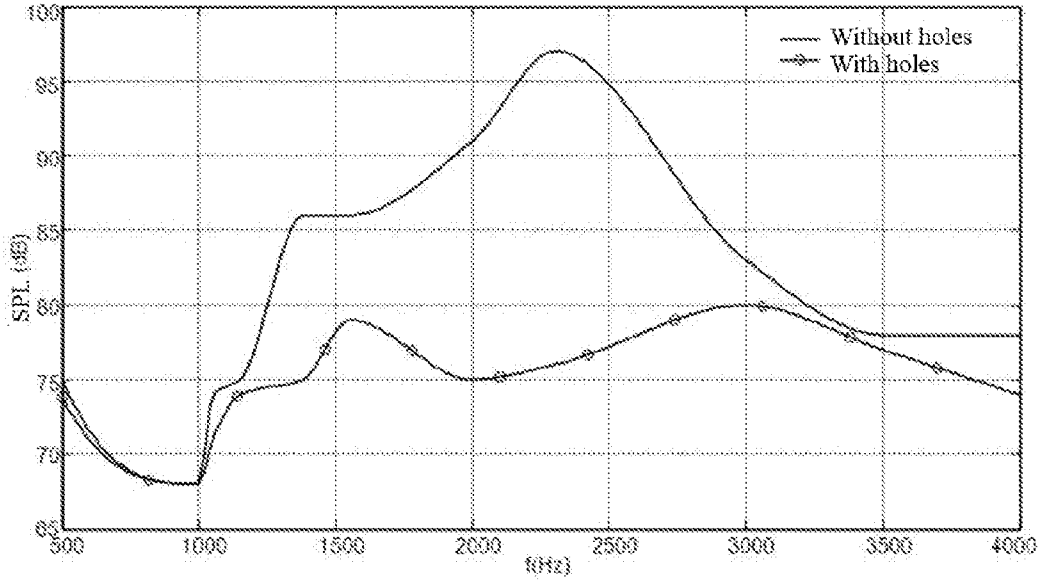

FIG. 9C

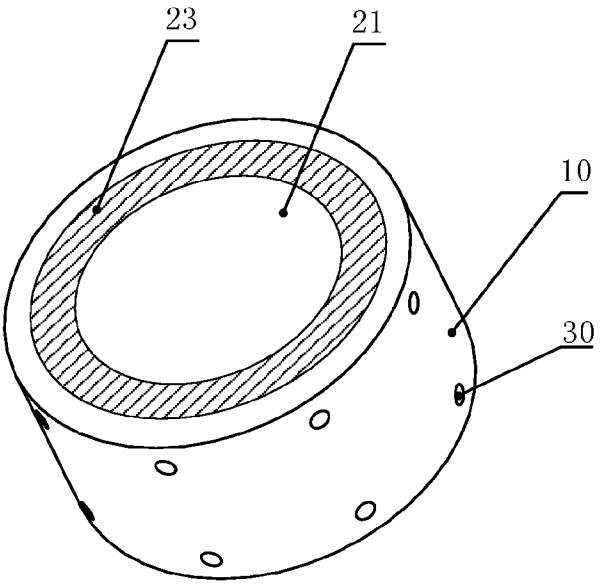

FIG. 10A

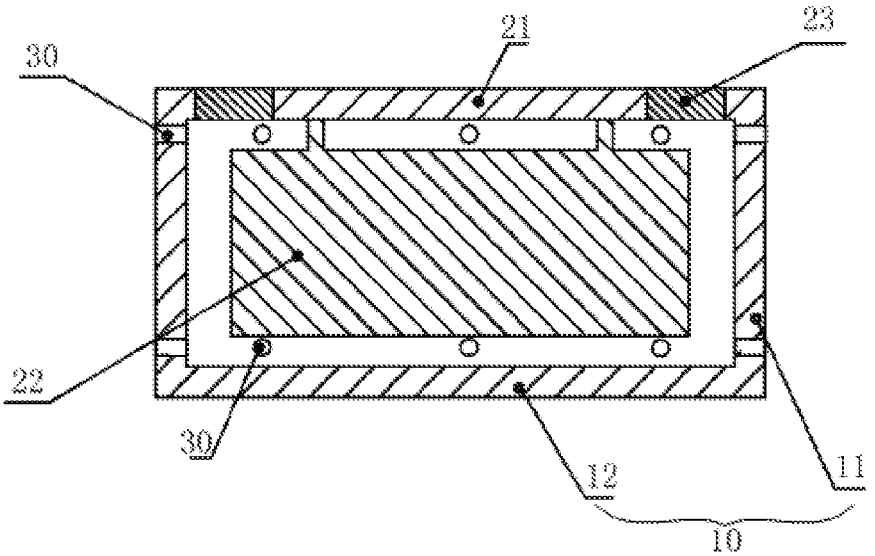

FIG. 10B

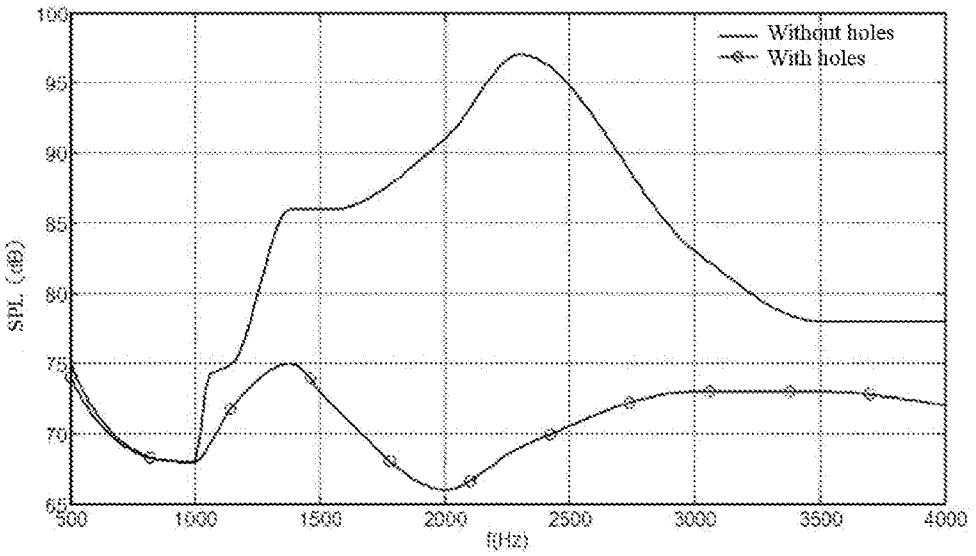

FIG. 10C

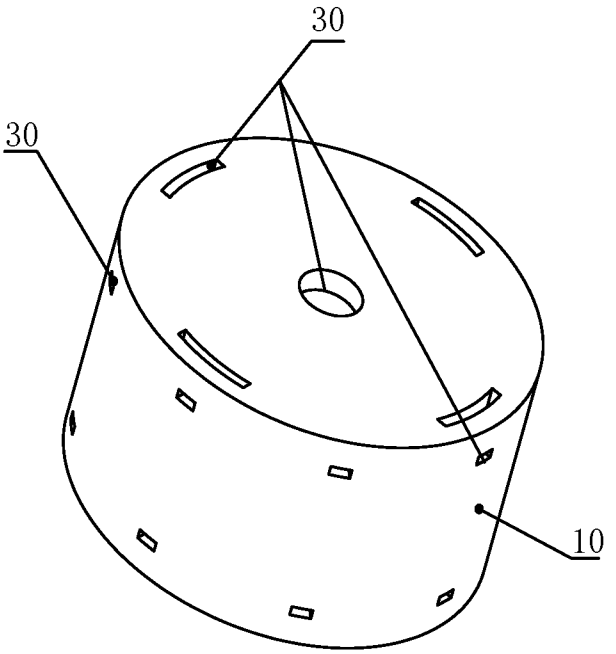

FIG. 11A

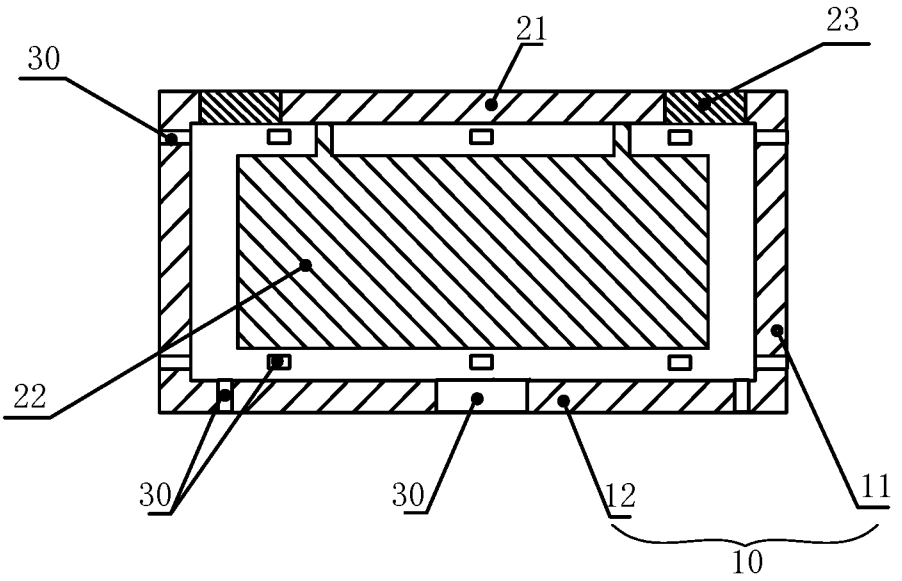

FIG. 11B

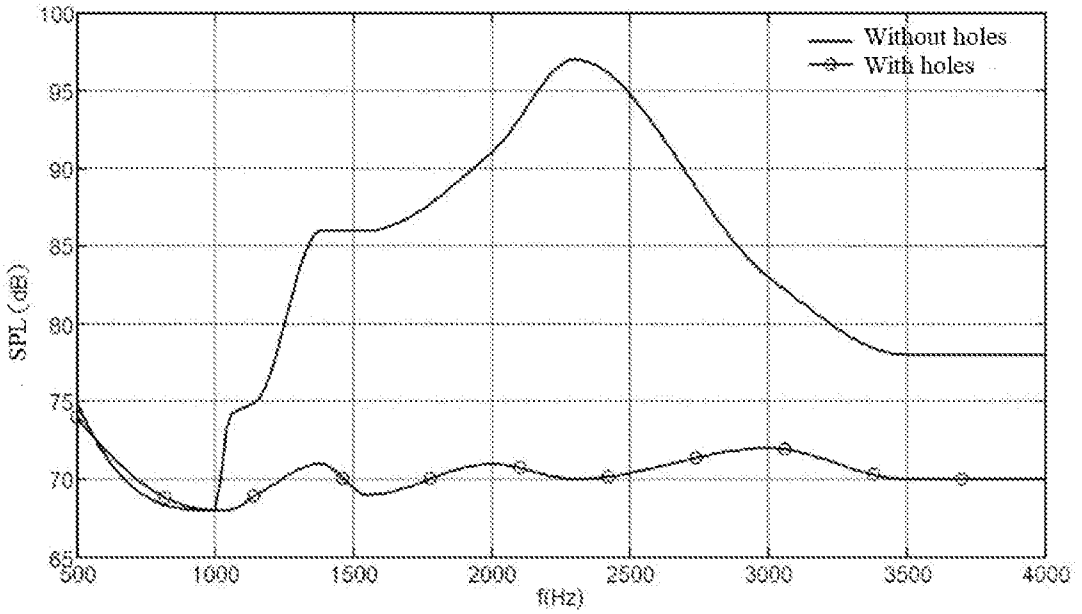

FIG. 11C

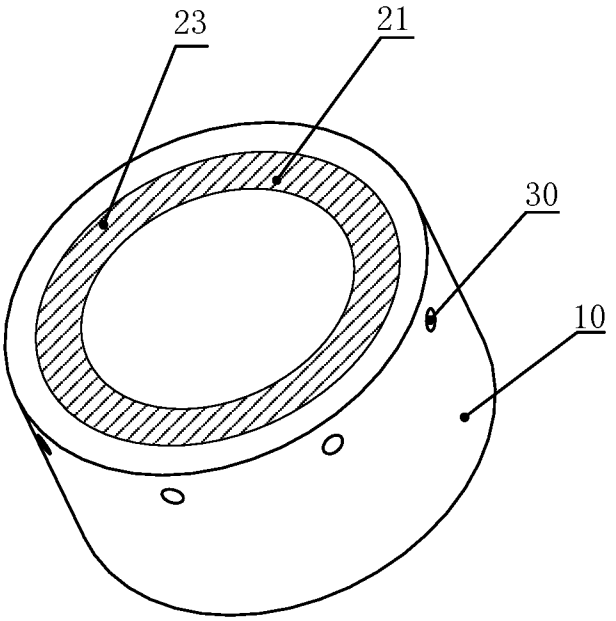

FIG. 12A

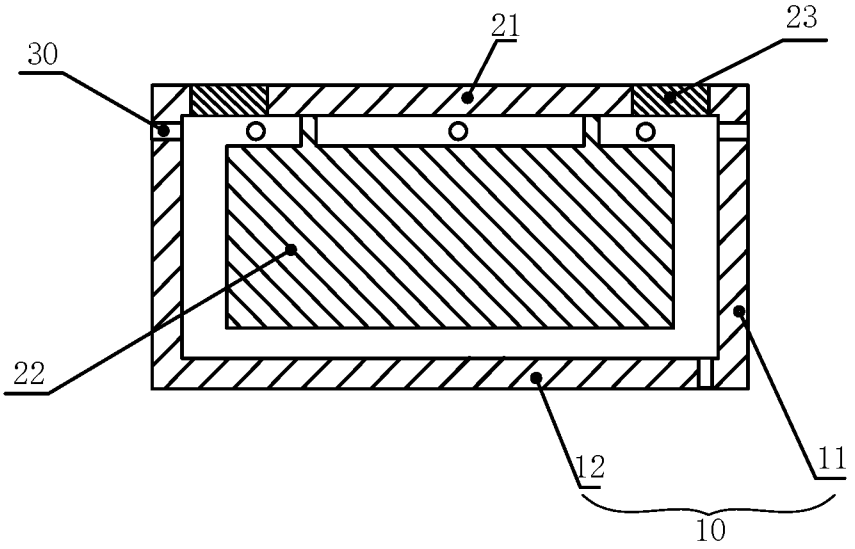

FIG. 12B

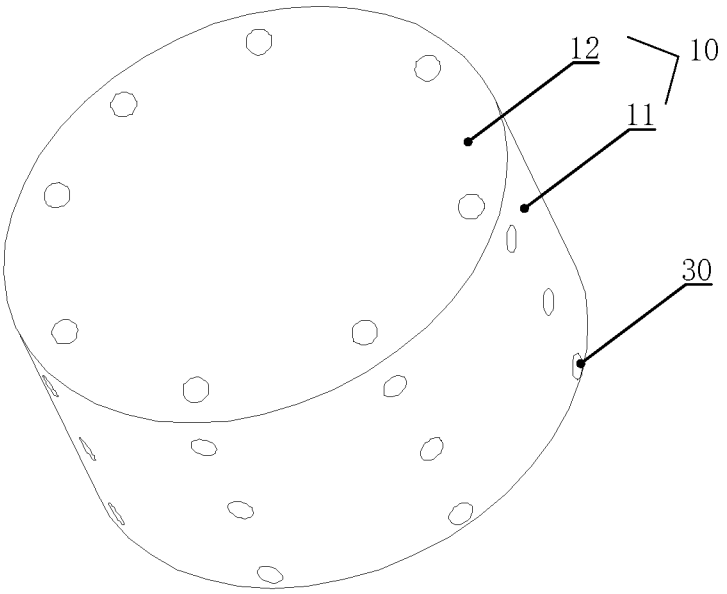

FIG. 13A

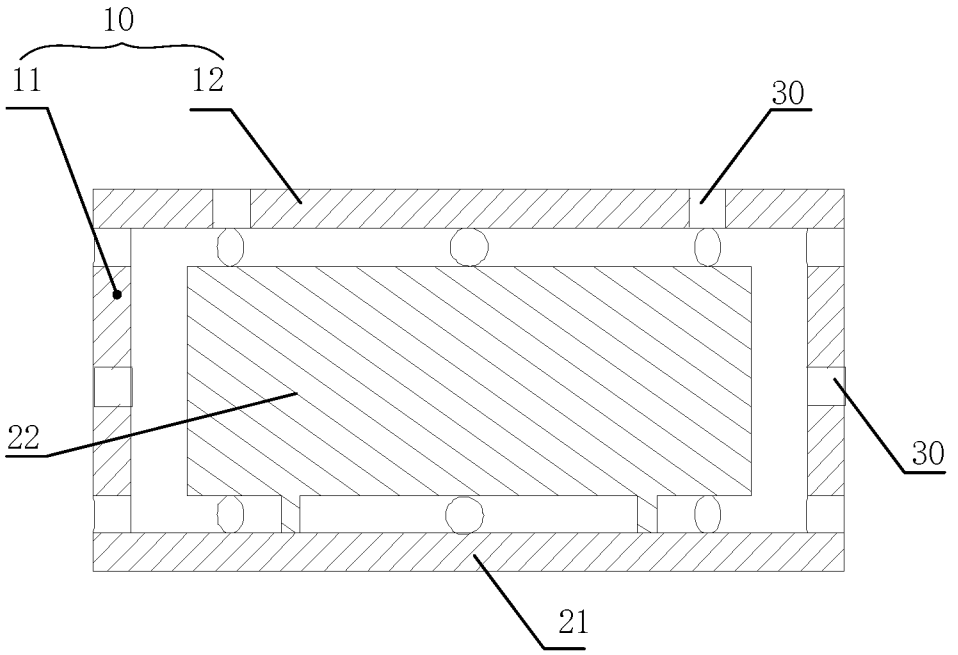

FIG. 13B

SYSTEMS AND METHODS FOR SUPPRESSING SOUND LEAKAGE

FIELD OF THE INVENTION

[0001] This application relates to a bone conduction device, and more specifically, relates to methods and systems for reducing sound leakage by a bone conduction device.

BACKGROUND

[0002] A bone conduction speaker, which may be also called a vibration speaker, may push human tissues and bones to stimulate the auditory nerve in cochlea and enable people to hear sound. The bone conduction speaker is also called a bone conduction headphone.

[0003] An exemplary structure of a bone conduction speaker based on the principle of the bone conduction speaker is shown in FIGS. **1**A and **1**B. The bone conduction speaker may include an open housing **110**, a vibration board **121**, a transducer **122**, and a linking component **123**. The transducer **122** may transduce electrical signals to mechanical vibrations. The vibration board **121** may be connected to the transducer **122** and vibrate synchronically with the transducer **122**. The vibration board **121** may stretch out from the opening of the housing **110** and contact with human skin to pass vibrations to auditory nerves through human tissues and bones, which in turn enables people to hear sound. The linking component **123** may reside between the transducer **122** and the housing **110**, configured to fix the vibrating transducer **122** inside the housing **110**. To minimize its effect on the vibrations generated by the transducer **122**, the linking component **123** may be made of an elastic material.

[0004] However, the mechanical vibrations generated by the transducer **122** may not only cause the vibration board **121** to vibrate, but may also cause the housing **110** to vibrate through the linking component **123**. Accordingly, the mechanical vibrations generated by the bone conduction speaker may push human tissues through the bone board **121**, and at the same time a portion of the vibrating board **121** and the housing **110** that are not in contact with human issues may nevertheless push air. Air sound may thus be generated by the air pushed by the portion of the vibrating board **121** and the housing **110**. The air sound may be called "sound leakage." In some cases, sound leakage is harmless. However, sound leakage should be avoided as much as possible if people intend to protect privacy when using the bone conduction speaker or try not to disturb others when listening to music.

[0005] Attempting to solve the problem of sound leakage, Korean patent KR10-2009-0082999 discloses a bone conduction speaker of a dual magnetic structure and double-frame. As shown in FIG. **2**, the speaker disclosed in the patent includes: a first frame **210** with an open upper portion and a second frame **220** that surrounds the outside of the first frame **210**. The second frame **220** is separately placed from the outside of the first frame **210**. The first frame **210** includes a movable coil **230** with electric signals, an inner magnetic component **240**, an outer magnetic component **250**, a magnet field formed between the inner magnetic component **240**, and the outer magnetic component **250**. The inner magnetic component **240** and the out magnetic component **250** may vibrate by the attraction and repulsion force of the coil **230** placed in the magnet field. A vibration board **260** connected to the moving coil **230** may receive the vibration of the moving coil **230**. A vibration unit **270** connected to the vibration board **260** may pass the vibration to a user by contacting with the skin. As described in the patent, the second frame **220** surrounds the first frame **210**, in order to use the second frame **220** to prevent the vibration of the first frame **210** from dissipating the vibration to outsides, and thus may reduce sound leakage to some extent.

[0006] However, in this design, since the second frame **220** is fixed to the first frame **210**, vibrations of the second frame **220** are inevitable. As a result, sealing by the second frame **220** is unsatisfactory. Furthermore, the second frame **220** increases the whole volume and weight of the speaker, which in turn increases the cost, complicates the assembly process, and reduces the speaker's reliability and consistency.

SUMMARY

[0007] The embodiments of the present application discloses methods and system of reducing sound leakage of a bone conduction speaker.

[0008] In one aspect, the embodiments of the present application disclose a method of reducing sound leakage of a bone conduction speaker, including:

[0009] providing a bone conduction speaker including a vibration board fitting human skin and passing vibrations, a transducer, and a housing, wherein at least one sound guiding hole is located in at least one portion of the housing;

[0010] the transducer drives the vibration board to vibrate;

[0011] the housing vibrates, along with the vibrations of the transducer, and pushes air, forming a leaked sound wave transmitted in the air;

[0012] the air inside the housing is pushed out of the housing through the at least one sound guiding hole, interferes with the leaked sound wave, and reduces an amplitude of the leaked sound wave.

[0013] In some embodiments, one or more sound guiding holes may locate in an upper portion, a central portion, and/or a lower portion of a sidewall and/or the bottom of the housing.

[0014] In some embodiments, a damping layer may be applied in the at least one sound guiding hole in order to adjust the phase and amplitude of the guided sound wave through the at least one sound guiding hole.

[0015] In some embodiments, sound guiding holes may be configured to generate guided sound waves having a same phase that reduce the leaked sound wave having a same wavelength; sound guiding holes may be configured to generate guided sound waves having different phases that reduce the leaked sound waves having different wavelengths.

[0016] In some embodiments, different portions of a same sound guiding hole may be configured to generate guided sound waves having a same phase that reduce the leaked sound wave having same wavelength. In some embodiments, different portions of a same sound guiding hole may be configured to generate guided sound waves having different phases that reduce leaked sound waves having different wavelengths.

[0017] In another aspect, the embodiments of the present application disclose a bone conduction speaker, including a housing, a vibration board and a transducer, wherein:

[0018] the transducer is configured to generate vibrations and is located inside the housing;

[0019] the vibration board is configured to be in contact with skin and pass vibrations;

[0020] At least one sound guiding hole may locate in at least one portion on the housing, and preferably, the at least one sound guiding hole may be configured to guide a sound wave inside the housing, resulted from vibrations of the air inside the housing, to the outside of the housing, the guided sound wave interfering with the leaked sound wave and reducing the amplitude thereof.

[0021] In some embodiments, the at least one sound guiding hole may locate in the sidewall and/or bottom of the housing.

[0022] In some embodiments, preferably, the at least one sound guiding sound hole may locate in the upper portion and/or lower portion of the sidewall of the housing.

[0023] In some embodiments, preferably, the sidewall of the housing is cylindrical and there are at least two sound guiding holes located in the sidewall of the housing, which are arranged evenly or unevenly in one or more circles. Alternatively, the housing may have a different shape.

[0024] In some embodiments, preferably, the sound guiding holes have different heights along the axial direction of the cylindrical sidewall.

[0025] In some embodiments, preferably, there are at least two sound guiding holes located in the bottom of the housing. In some embodiments, the sound guiding holes are distributed evenly or unevenly in one or more circles around the center of the bottom. Alternatively or additionally, one sound guiding hole is located at the center of the bottom of the housing.

[0026] In some embodiments, preferably, the sound guiding hole is a perforative hole. In some embodiments, there may be a damping layer at the opening of the sound guiding hole.

[0027] In some embodiments, preferably, the guided sound waves through different sound guiding holes and/or different portions of a same sound guiding hole have different phases or a same phase.

[0028] In some embodiments, preferably, the damping layer is a tuning paper, a tuning cotton, a nonwoven fabric, a silk, a cotton, a sponge, or a rubber.

[0029] In some embodiments, preferably, the shape of a sound guiding hole is circle, ellipse, quadrangle, rectangle, or linear. In some embodiments, the sound guiding holes may have a same shape or different shapes.

[0030] In some embodiments, preferably, the transducer includes a magnetic component and a voice coil. Alternatively, the transducer includes piezoelectric ceramic.

[0031] The design disclosed in this application utilizes the principles of sound interference, by placing sound guiding holes in the housing, to guide sound wave(s) inside the housing to the outside of the housing, the guided sound wave(s) interfering with the leaked sound wave, which is formed when the housing's vibrations push the air outside the housing. The guided sound wave(s) reduces the amplitude of the leaked sound wave and thus reduces the sound leakage. The design not only reduces sound leakage, but is also easy to implement, doesn't increase the volume or weight of the bone conduction speaker, and barely increase the cost of the product.

BRIEF DESCRIPTION OF THE DRAWINGS

[0032] FIGS. **1**A and **1**B are schematic structures illustrating a bone conduction speaker of prior art;

[0033] FIG. **2** is a schematic structure illustrating another bone conduction speaker of prior art;

[0034] FIG. **3** illustrates the principle of sound interference according to some embodiments of the present disclosure;

[0035] FIGS. **4**A and **4**B are schematic structures of an exemplary bone conduction speaker according to some embodiments of the present disclosure;

[0036] FIG. **4**C is a schematic structure of the bone conduction speaker according to some embodiments of the present disclosure;

[0037] FIG. **4**D is a diagram illustrating reduced sound leakage of the bone conduction speaker according to some embodiments of the present disclosure;

[0038] FIG. **5** is a diagram illustrating the equal-loudness contour curves according to some embodiments of the present disclosure;

[0039] FIG. **6** is a flow chart of an exemplary method of reducing sound leakage of a bone conduction speaker according to some embodiments of the present disclosure;

[0040] FIGS. **7**A and **7**B are schematic structures of an exemplary bone conduction speaker according to some embodiments of the present disclosure;

[0041] FIG. **7**C is a diagram illustrating reduced sound leakage of a bone conduction speaker according to some embodiments of the present disclosure;

[0042] FIGS. **8**A and **8**B are schematic structure of an exemplary bone conduction speaker according to some embodiments of the present disclosure;

[0043] FIG. **8**C is a diagram illustrating reduced sound leakage of a bone conduction speaker according to some embodiments of the present disclosure;

[0044] FIGS. **9**A and **9**B are schematic structures of an exemplary bone conduction speaker according to some embodiments of the present disclosure;

[0045] FIG. **9**C is a diagram illustrating reduced sound leakage of a bone conduction speaker according to some embodiments of the present disclosure;

[0046] FIGS. **10**A and **10**B are schematic structures of an exemplary bone conduction speaker according to some embodiments of the present disclosure;

[0047] FIG. **10**C is a diagram illustrating reduced sound leakage of a bone conduction speaker according to some embodiments of the present disclosure;

[0048] FIGS. **11**A and **11**B are schematic structures of an exemplary bone conduction speaker according to some embodiments of the present disclosure;

[0049] FIG. **11**C is a diagram illustrating reduced sound leakage of a bone conduction speaker according to some embodiments of the present disclosure; and

[0050] FIGS. **12**A and **12**B are schematic structures of an exemplary bone conduction speaker according to some embodiments of the present disclosure;

[0051] FIGS. **13**A and **13**B are schematic structures of an exemplary bone conduction speaker according to some embodiments of the present disclosure.

[0052] The meanings of the reference numerals in the figures are as followed:

[0053] **110**, open housing; **121**, vibration board; **122**, transducer; **123**, linking component; **210**, first frame; **220**, second frame; **230**, moving coil; **240**, inner magnetic com-

ponent; **250**, outer magnetic component; **260**; vibration board; **270**, vibration unit; **10**, housing; **11**, sidewall; **12**, bottom; **21**, vibration board; **22**, transducer; **23**, linking component; **24**, elastic component; **30**, sound guiding hole.

DETAILED DESCRIPTION

[0054] Followings are some further detailed illustrations about this disclosure. The following examples are for illustrative purposes only and should not be interpreted as limitations of the claimed invention. There are a variety of alternative techniques and procedures available to those of ordinary skill in the art, which would similarly permit one to successfully perform the intended invention. In addition, the figures just show the structures relative to this disclosure, not the whole structure.

[0055] To explain the scheme of the embodiments of this disclosure, the design principles of this disclosure will be introduced here. FIG. **3** illustrates the principles of sound interference according to some embodiments of the present disclosure. Two or more sound waves may interfere in the space based on, for example, the frequency and/or amplitude of the waves. Specifically, the amplitudes of the sound waves with the same frequency may be overlaid to generate a strengthened wave or a weakened wave. As shown in FIG. **3**, sound source **1** and sound source **2** have the same frequency and locate in different locations in the space. The sound waves generated from these two sound sources may encounter in an arbitrary point A. If the phases of the sound wave **1** and sound wave **2** are the same at point A, the amplitudes of the two sound waves may be added, generating a strengthened sound wave signal at point A; on the other hand, if the phases of the two sound waves are opposite at point A, their amplitudes may be offset, generating a weakened sound wave signal at point A.

[0056] This disclosure applies above-noted the principles of sound wave interference to a bone conduction speaker and disclose a bone conduction speaker that can reduce sound leakage.

Embodiment One

[0057] FIGS. **4**A and **4**B are schematic structures of an exemplary bone conduction speaker. The bone conduction speaker may include a housing **10**, a vibration board **21**, and a transducer **22**. The transducer **22** may be inside the housing **10** and configured to generate vibrations. The housing **10** may have one or more sound guiding holes **30**. The sound guiding hole(s) **30** may be configured to guide sound waves inside the housing **10** to the outside of the housing **10**. In some embodiments, the guided sound waves may form interference with leaked sound waves generated by the vibrations of the housing **10**, so as to reducing the amplitude of the leaked sound. The transducer **22** may be configured to convert an electrical signal to mechanical vibrations. For example, an audio electrical signal may be transmitted into a voice coil that is placed in a magnet, and the electromagnetic interaction may cause the voice coil to vibrate based on the audio electrical signal. As another example, the transducer **22** may include piezoelectric ceramics, shape changes of which may cause vibrations in accordance with electrical signals received.

[0058] Furthermore, the vibration board **21** may be connected to the transducer **22** and configured to vibrate along with the transducer **22**. The vibration board **21** may stretch out from the opening of the housing **10**, and touch the skin of the user and pass vibrations to auditory nerves through human tissues and bones, which in turn enables the user to hear sound. The linking component **23** may reside between the transducer **22** and the housing **10**, configured to fix the vibrating transducer **122** inside the housing. The linking component **23** may include one or more separate components, or may be integrated with the transducer **22** or the housing **10**. In some embodiments, the linking component **23** is made of an elastic material.

[0059] The transducer **22** may drive the vibration board **21** to vibrate. The transducer **22**, which resides inside the housing **10**, may vibrate. The vibrations of the transducer **22** may drives the air inside the housing **10** to vibrate, producing a sound wave inside the housing **10**, which can be referred to as "sound wave inside the housing." Since the vibration board **21** and the transducer **22** are fixed to the housing **10** via the linking component **23**, the vibrations may pass to the housing **10**, causing the housing **10** to vibrate synchronously. The vibrations of the housing **10** may generate a leaked sound wave, which spreads outwards as sound leakage.

[0060] The sound wave inside the housing and the leaked sound wave are like the two sound sources in FIG. **3**. In some embodiments, the sidewall **11** of the housing **10** may have one or more sound guiding holes **30** configured to guide the sound wave inside the housing **10** to the outside. The guided sound wave through the sound guiding hole(s) **30** may interfere with the leaked sound wave generated by the vibrations of the housing **10**, and the amplitude of the leaked sound wave may be reduced due to the interference, which may result in a reduced sound leakage. Therefore, the design of this embodiment can solve the sound leakage problem to some extent by making an improvement of setting a sound guiding hole on the housing, and not increasing the volume and weight of the bone conduction speaker.

[0061] In some embodiments, one sound guiding hole **30** is set on the upper portion of the sidewall **11**. As used herein, the upper portion of the sidewall **11** refers to the portion of the sidewall **11** starting from the top of the sidewall (contacting with the vibration board **21**) to about the ⅓ height of the sidewall.

[0062] FIG. **4**C is a schematic structure of the bone conduction speaker illustrated in FIGS. **4**A-**4**B. The structure of the bone conduction speaker is further illustrated with mechanics elements illustrated in FIG. **4**C. As shown in FIG. **4**C, the linking component **23** between the sidewall **11** of the housing **10** and the vibration board **21** may be represented by an elastic element **23** and a damping element in the parallel connection. The linking relationship between the vibration board **21** and the transducer **22** may be represented by an elastic element **24**.

[0063] Outside the housing **10**, the sound leakage reduction is proportional to

$$(\iint_{S_{hole}} P ds - \iint_{S_{housing}} P_a ds), \quad (1)$$

where S_{hole} is the area of the opening of the sound guiding hole **30**, $S_{housing}$ is the area of the housing **10** (e.g., the sidewall **11** and the bottom **12**) that is not in contact with a human face.

[0064] The pressure inside the housing may be expressed as

$$P = P_a + P_b + P_c + P_e, \quad (2)$$

where P_a, P_b, P_c, and P_e are the sound pressures of an arbitrary point inside the housing generated by side a, side b, side c, and side e, respectively.

[0065] The center of the side b, 0 point, is set as the origin of the space coordinates, and the side b can be set as the z=0 plane, and so P_a, P_b, P_c, and P_e may be expressed as follows:

$$P_a(x, y, z) = -j\omega\rho_0 \iint_{S_a} W_a(x'_a, y'_a) \cdot \frac{e^{jkR(x'_a, y'_a)}}{4\pi R(x'_a, y'_a)} dx'_a dy'_a - P_{aR}, \quad (3)$$

$$P_b(x, y, z) = -j\omega\rho_0 \iint_{S_b} W_b(x', y') \cdot \frac{e^{jkR(x', y')}}{4\pi R(x', y')} dx' dy' - P_{bR}, \quad (4)$$

$$P_c(x, y, z) = -j\omega\rho_0 \iint_{S_c} W_c(x'_c, y'_c) \cdot \frac{e^{jkR(x'_c, y'_c)}}{4\pi R(x'_c, y'_c)} dx'_c dy'_c - P_{cR}, \quad (5)$$

$$P_e(x, y, z) = -j\omega\rho_0 \iint_{S_e} W_e(x'_e, y'_e) \cdot \frac{e^{jkR(x'_e, y'_e)}}{4\pi R(x'_e, y'_e)} dx'_e dy'_e - P_{eR}, \quad (6)$$

where $R(x', y')=\sqrt{(x-x')^2+(y-y')^2+z^2}$ is the distance between an observation point (x, y, z) and a point on side b (x', y', 0); S_a, S_b, S_c and S_e are the areas of side a, side b, side c and side e, respectively;

where $R(x'_a, y'_a)=\sqrt{(x-x_a')^2+(y-y_a')^2+(z-z_a)^2}$ is the distance between the observation point (x, y, z) and a point on side a (x'_a, y'_a, z_a);

$R(x'_c, y'_c)=\sqrt{(x-x_c')^2+(y-y_c')^2+(z-z_c)^2}$ is the distance between the observation point (x, y, z) and a point on side c (x'_c, y'_c, z_c);

$R(x'_e, y'_e)=\sqrt{(x-x_e')^2+(y-y_e')^2+(z-z_e)^2}$ is the distance between the observation point (x, y, z) and a point on side e (x'_e, y'_e, z_e);

k=ω/u (u is the velocity of sound) is a wave number, ρ_0 is an air density, ω is an angular frequency of vibration;

[0066] P_{aR}, P_{bR}, P_{cR}, and P_{eR} are acoustic resistances of air, which respectively are:

$$P_{aR} = A \cdot \frac{z_a \cdot r + j\omega \cdot z_a \cdot r'}{\varphi} + \delta, \quad (7)$$

$$P_{bR} = A \cdot \frac{z_b \cdot r + j\omega \cdot z_b \cdot r'}{\varphi} + \delta, \quad (8)$$

$$P_{cR} = A \cdot \frac{z_c \cdot r + j\omega \cdot z_c \cdot r'}{\varphi} + \delta, \quad (9)$$

$$P_{eR} = A \cdot \frac{z_e \cdot r + j\omega \cdot z_e \cdot r'}{\varphi} + \delta, \quad (10)$$

wherein r is the acoustic resistance per unit length, r' is the sound quality per unit length, z_a is the distance between the observation point and side a, z_b is the distance between the observation point and side b, z_c is the distance between the observation point and side c, z_e is the distance between the observation point and side e.

[0067] $W_a(x, y)$, $W_b(x, y)$, $W_c(x, y)$, $W_e(x, y)$ and $W_d(x, y)$ are the sound source power per unit area of side a, side b, side c, side e and side d, respectively, which can be derived from following formulas (11):

$$\begin{cases} F_e = F_a = F - k_1\cos\omega t - \iint_{S_a} W_a(x, y)dxdy - \iint_{S_e} W_e(x, y)dxdy - f \\ F_b = -F + k_1\cos\omega t + \iint_{S_b} W_b(x, y)dxdy - \iint_{S_e} W_e(x, y)dxdy - L \\ F_c = F_d = F_b - k_2\cos\omega t - \iint_{S_c} W_c(x, y)dxdy - f - \gamma \\ F_d = F_b - k_2\cos\omega t - \iint_{S_d} W_d(x, y)dxdy \end{cases} \quad (11)$$

where F is the driving force generated by the transducer, F_a, F_b, F_c, F_d, and F_e are the driving forces of side a, side b, side c, side d, and side e, respectively. S_d is the area of side d, f is the viscous resistance formed in the small gap of the sidewalls, and f=ηΔs(dv/dy).

[0068] L is the equivalent load on a human face when the vibration board acts on the human face, y is the energy dissipated on elastic element **24**, k_1 and k_2 are the elastic coefficients of elastic element **1** and elastic element **2**, respectively, η is the fluid viscosity coefficient, dv/dy is the velocity gradient of fluid, Δs is the cross-section area of a subject (board), A is the amplitude, ϕ is the area of the sound field, and δ is a high order minimum (which is generated by the incompletely symmetrical shape of the housing).

[0069] The sound pressure of an arbitrary point outside the housing, generated by the vibration of the housing **10** is expressed as:

$$P_d = -j\omega\rho_0 \iint W_d(x'_d, y'_d) \cdot \frac{e^{jkR(x'_d, y'_d)}}{4\pi R(x'_d, y'_d)} dx'_d dy'_d, \quad (12)$$

where $R(x_d', y_d')=\sqrt{(x-x_d')^2+(y-y_d')^2+(z-z_d)^2}$ is the distance between the observation point (x, y, z) and a point on side d (x'_d, y'_d, z_d).

[0070] P_a, P_b, P_c, and P_e are functions of the position, when we set a hole on an arbitrary position in the housing, if the area of the hole is S_{hole}, the sound pressure of the hole is $\iint_{S_{hole}} P ds$.

[0071] In the meanwhile, because the vibration board **21** fits human tissues tightly, the power it gives out is absorbed all by human tissues, so the only side that can push air outside the housing to vibrate is side d, thus forming sound leakage. As described elsewhere, the sound leakage is resulted from the vibrations of the housing **10**. For illustrative purposes, the sound pressure generated by the housing **10** may be expressed as $\iint_{S_{housing}} P_d ds$

[0072] The leaked sound wave and the guided sound wave interference may result in a weakened sound wave, i.e., to make $\iint_{S_{hole}} P ds$ and $\iint_{S_{housing}} P_d ds$ have the same value but opposite directions, and the sound leakage may be reduced. In some embodiments, $\iint_{S_{hole}} P ds$ may be adjusted to reduce the sound leakage. Since $\iint_{S_{hole}} P ds$ corresponds to information of phases and amplitudes of one or more holes, which further relates to dimensions of the housing of the bone conduction speaker, the vibration frequency of the transducer, the position, shape, quantity and/or size of the sound

guiding holes and whether there is damping inside the holes. Thus, the position, shape, and quantity of sound guiding holes, and/or damping materials may be adjusted to reduce sound leakage.

[0073] Additionally, because of the basic structure and function differences of a bone conduction speaker and a traditional air conduction speaker, the formulas above are only suitable for bone conduction speakers. Whereas in traditional air conduction speakers, the air in the air housing can be treated as a whole, which is not sensitive to positions, and this is different intrinsically with a bone conduction speaker, therefore the above formulas are not suitable to an air conduction speaker.

[0074] According to the formulas above, a person having ordinary skill in the art would understand that the effectiveness of reducing sound leakage is related to the dimensions of the housing of the bone conduction speaker, the vibration frequency of the transducer, the position, shape, quantity and size of the sound guiding hole(s) and whether there is damping inside the sound guiding hole(s). Accordingly, various configurations, depending on specific needs, may be obtained by choosing specific position where the sound guiding hole(s) is located, the shape and/or quantity of the sound guiding hole(s) as well as the damping material.

[0075] FIG. **5** is a diagram illustrating the equal-loudness contour curves according to some embodiments of the present disclose. The horizontal coordinate is frequency, while the vertical coordinate is sound pressure level (SPL). As used herein, the SPL refers to the change of atmospheric pressure after being disturbed, i.e., a surplus pressure of the atmospheric pressure, which is equivalent to an atmospheric pressure added to a pressure change caused by the disturbance. As a result, the sound pressure may reflect the amplitude of a sound wave. In FIG. **5**, on each curve, sound pressure levels corresponding to different frequencies are different, while the loudness levels felt by human ears are the same. For example, each curve is labeled with a number representing the loudness level of said curve. According to the loudness level curves, when volume (sound pressure amplitude) is lower, human ears are not sensitive to sounds of high or low frequencies; when volume is higher, human ears are more sensitive to sounds of high or low frequencies. Bone conduction speakers may generate sound relating to different frequency ranges, such as 1000 Hz~4000 Hz, or 1000 Hz~4000 Hz, or 1000 Hz~3500 Hz, or 1000 Hz~3000 Hz, or 1500 Hz~3000 Hz. The sound leakage within the above-mentioned frequency ranges may be the sound leakage aimed to be reduced with a priority.

[0076] FIG. **4**D is a diagram illustrating the effect of reduced sound leakage according to some embodiments of the present disclosure, wherein the test results and calculation results are close in the above range. The bone conduction speaker being tested includes a cylindrical housing, which includes a sidewall and a bottom, as described in FIGS. **4**A and **4**B. The cylindrical housing is in a cylinder shape having a radius of 22 mm, the sidewall height of 14 mm, and a plurality of sound guiding holes being set on the upper portion of the sidewall of the housing. The openings of the sound guiding holes are rectangle. The sound guiding holes are arranged evenly on the sidewall. The target region where the sound leakage is to be reduced is 50 cm away from the outside of the bottom of the housing. The distance of the leaked sound wave spreading to the target region and the distance of the sound wave spreading from the surface of the transducer **20** through the sound guiding holes **20** to the target region have a difference of about 180 degrees in phase. As shown, the leaked sound wave is reduced in the target region dramatically or even be eliminated.

[0077] According to the embodiments in this disclosure, the effectiveness of reducing sound leakage after setting sound guiding holes is very obvious. As shown in FIG. **4**D, the bone conduction speaker having sound guiding holes greatly reduce the sound leakage compared to the bone conduction speaker without sound guiding holes.

[0078] In the tested frequency range, after setting sound guiding holes, the sound leakage is reduced by about 10 dB on average. Specifically, in the frequency range of 1500 Hz~3000 Hz, the sound leakage is reduced by over 10 dB. In the frequency range of 2000 Hz~2500 Hz, the sound leakage is reduced by over 20 dB compared to the scheme without sound guiding holes.

[0079] A person having ordinary skill in the art can understand from the above-mentioned formulas that when the dimensions of the bone conduction speaker, target regions to reduce sound leakage and frequencies of sound waves differ, the position, shape and quantity of sound guiding holes also need to adjust accordingly.

[0080] For example, in a cylinder housing, according to different needs, a plurality of sound guiding holes may be on the sidewall and/or the bottom of the housing. Preferably, the sound guiding hole may be set on the upper portion and/or lower portion of the sidewall of the housing. The quantity of the sound guiding holes set on the sidewall of the housing is no less than two. Preferably, the sound guiding holes may be arranged evenly or unevenly in one or more circles with respect to the center of the bottom. In some embodiments, the sound guiding holes may be arranged in at least one circle. In some embodiments, one sound guiding hole may be set on the bottom of the housing. In some embodiments, the sound guiding hole may be set at the center of the bottom of the housing.

[0081] The quantity of the sound guiding holes can be one or more. Preferably, multiple sound guiding holes may be set symmetrically on the housing. In some embodiments, there are 6-8 circularly arranged sound guiding holes.

[0082] The openings (and cross sections) of sound guiding holes may be circle, ellipse, rectangle, or slit. Slit generally means slit along with straight lines, curve lines, or arc lines. Different sound guiding holes in one bone conduction speaker may have same or different shapes.

[0083] A person having ordinary skill in the art can understand that, the sidewall of the housing may not be cylindrical, the sound guiding holes can be arranged asymmetrically as needed. Various configurations may be obtained by setting different combinations of the shape, quantity, and position of the sound guiding. Some other embodiments along with the figures are described as follows.

Embodiment Two

[0084] FIG. **6** is a flowchart of an exemplary method of reducing sound leakage of a bone conduction speaker according to some embodiments of the present disclosure. At **601**, a bone conduction speaker including a vibration plate **21** touching human skin and passing vibrations, a transducer **22**, and a housing **10** is provided. At least one sound guiding hole **30** is arranged on the housing **10**. At **602**, the vibration plate **21** is driven by the transducer **22**, causing

the vibration **21** to vibrate. At **603**, a leaked sound wave due to the vibrations of the housing is formed, wherein the leaked sound wave transmits in the air. At **604**, a guided sound wave passing through the at least one sound guiding hole **30** from the inside to the outside of the housing **10**. The guided sound wave interferes with the leaked sound wave, reducing the sound leakage of the bone conduction speaker.

[0085] The sound guiding holes **30** are preferably set at different positions of the housing **10**.

[0086] The effectiveness of reducing sound leakage may be determined by the formulas and method as described above, based on which the positions of sound guiding holes may be determined.

[0087] A damping layer is preferably set in a sound guiding hole **30** to adjust the phase and amplitude of the sound wave transmitted through the sound guiding hole **30**.

[0088] In some embodiments, different sound guiding holes may generate different sound waves having a same phase to reduce the leaked sound wave having the same wavelength. In some embodiments, different sound guiding holes may generate different sound waves having different phases to reduce the leaked sound waves having different wavelengths.

[0089] In some embodiments, different portions of a sound guiding hole **30** may be configured to generate sound waves having a same phase to reduce the leaked sound waves with the same wavelength. In some embodiments, different portions of a sound guiding hole **30** may be configured to generate sound waves having different phases to reduce the leaked sound waves with different wavelengths.

[0090] Additionally, the sound wave inside the housing may be processed to basically have the same value but opposite phases with the leaked sound wave, so that the sound leakage may be further reduced.

Embodiment Three

[0091] FIGS. **7**A and **7**B are schematic structures illustrating an exemplary bone conduction speaker according to some embodiments of the present disclosure. The bone conduction speaker may include an open housing **10**, a vibration board **21**, and a transducer **22**. The housing **10** may cylindrical and have a sidewall and a bottom. A plurality of sound guiding holes **30** may be arranged on the lower portion of the sidewall (i.e., from about the ⅔ height of the sidewall to the bottom). The quantity of the sound guiding holes **30** may be 8, the openings of the sound guiding holes **30** may be rectangle. The sound guiding holes **30** may be arranged evenly or evenly in one or more circles on the sidewall of the housing **10**.

[0092] In the embodiment, the transducer **22** is preferably implemented based on the principle of electromagnetic transduction. The transducer may include components such as magnetizer, voice coil, and etc., and the components may located inside the housing and may generate synchronous vibrations with a same frequency.

[0093] FIG. **7**C is a diagram illustrating reduced sound leakage according to some embodiments of the present disclosure. In the frequency range of 1400 Hz~4000 Hz, the sound leakage is reduced by more than 5 dB, and in the frequency range of 2250 Hz~2500 Hz, the sound leakage is reduced by more than 20 dB.

Embodiment Four

[0094] FIGS. **8**A and **8**B are schematic structures illustrating an exemplary bone conduction speaker according to some embodiments of the present disclosure. The bone conduction speaker may include an open housing **10**, a vibration board **21**, and a transducer **22**. The housing **10** is cylindrical and have a sidewall and a bottom. The sound guiding holes **30** may be arranged on the central portion of the sidewall of the housing (i.e., from about the ⅓ height of the sidewall to the ⅔ height of the sidewall). The quantity of the sound guiding holes **30** may be 8, and the openings (and cross sections) of the sound guiding hole **30** may be rectangle. The sound guiding holes **30** may be arranged evenly or unevenly in one or more circles on the sidewall of the housing **10**.

[0095] In the embodiment, the transducer **21** may be implemented preferably based on the principle of electromagnetic transduction. The transducer **21** may include components such as magnetizer, voice coil, etc., which may be placed inside the housing and may generate synchronous vibrations with the same frequency.

[0096] FIG. **8**C is a diagram illustrating reduced sound leakage. In the frequency range of 1000 Hz~4000 Hz, the effectiveness of reducing sound leakage is great. For example, in the frequency range of 1400 Hz~2900 Hz, the sound leakage is reduced by more than 10 dB; in the frequency range of 2200 Hz~2500 Hz, the sound leakage is reduced by more than 20 dB.

[0097] It's illustrated that the effectiveness of reduced sound leakage can be adjusted by changing the positions of the sound guiding holes, while keeping other parameters relating to the sound guiding holes unchanged.

Embodiment Five

[0098] FIGS. **9**A and **9**B are schematic structures of an exemplary bone conduction speaker according to some embodiments of the present disclosure. The bone conduction speaker may include an open housing **10**, a vibration board **21** and a transducer **22**. The housing **10** is cylindrical, with a sidewall and a bottom. One or more perforative sound guiding holes **30** may be along the circumference of the bottom. In some embodiments, there may be 8 sound guiding holes **30** arranged evenly of unevenly in one or more circles on the bottom of the housing **10**. In some embodiments, the shape of one or more of the sound guiding holes **30** may be rectangle.

[0099] In the embodiment, the transducer **21** may be implemented preferably based on the principle of electromagnetic transduction. The transducer **21** may include components such as magnetizer, voice coil, etc., which may be placed inside the housing and may generate synchronous vibration with the same frequency.

[0100] FIG. **9**C is a diagram illustrating the effect of reduced sound leakage. In the frequency range of 1000 Hz~3000 Hz, the effectiveness of reducing sound leakage is outstanding. For example, in the frequency range of 1700 Hz~2700 Hz, the sound leakage is reduced by more than 10 dB; in the frequency range of 2200 Hz~2400 Hz, the sound leakage is reduced by more than 20 dB.

Embodiment Six

[0101] FIGS. **10**A and **10**B are schematic structures of an exemplary bone conduction speaker according to some

embodiments of the present disclosure. The bone conduction speaker may include an open housing **10**, a vibration board **21** and a transducer **22**. One or more perforative sound guiding holes **30** may be arranged on both upper and lower portions of the sidewall of the housing **10**. The sound guiding holes **30** may be arranged evenly or unevenly in one or more circles on the upper and lower portions of the sidewall of the housing **10**. In some embodiments, the quantity of sound guiding holes **30** in every circle may be 8, and the upper portion sound guiding holes and the lower portion sound guiding holes may be symmetrical about the central cross section of the housing **10**. In some embodiments, the shape of the sound guiding hole **30** may be circle.

[0102] The shape of the sound guiding holes on the upper portion and the shape of the sound guiding holes on the lower portion may be different; One or more damping layers may be arranged in the sound guiding holes to reduce leaked sound waves of the same wave length (or frequency), or to reduce leaked sound waves of different wave lengths.

[0103] FIG. **10**C is a diagram illustrating the effect of reducing sound leakage according to some embodiments of the present disclosure. In the frequency range of 1000 Hz~4000 Hz, the effectiveness of reducing sound leakage is outstanding. For example, in the frequency range of 1600 Hz~2700 Hz, the sound leakage is reduced by more than 15 dB; in the frequency range of 2000 Hz~2500 Hz, where the effectiveness of reducing sound leakage is most outstanding, the sound leakage is reduced by more than 20 dB. Compared to embodiment three, this scheme has a relatively balanced effect of reduced sound leakage on various frequency range, and this effect is better than the effect of schemes where the height of the holes are fixed, such as schemes of embodiment three, embodiment four, embodiment five, and so on.

Embodiment Seven

[0104] FIGS. **11**A and **11**B are schematic structures illustrating a bone conduction speaker according to some embodiments of the present disclosure. The bone conduction speaker may include an open housing **10**, a vibration board **21** and a transducer **22**. One or more perforative sound guiding holes **30** may be set on upper and lower portions of the sidewall of the housing **10** and on the bottom of the housing **10**. The sound guiding holes **30** on the sidewall are arranged evenly or unevenly in one or more circles on the upper and lower portions of the sidewall of the housing **10**. In some embodiments, the quantity of sound guiding holes **30** in every circle may be 8, and the upper portion sound guiding holes and the lower portion sound guiding holes may be symmetrical about the central cross section of the housing **10**. In some embodiments, the shape of the sound guiding hole **30** may be rectangular. There may be four sound guiding holds **30** on the bottom of the housing **10**. The four sound guiding holes **30** may be linear-shaped along arcs, and may be arranged evenly or unevenly in one or more circles with respect to the center of the bottom. Furthermore, the sound guiding holes **30** may include a circular perforative hole on the center of the bottom.

[0105] FIG. **11**C is a diagram illustrating the effect of reducing sound leakage of the embodiment. In the frequency range of 1000 Hz~4000 Hz, the effectiveness of reducing sound leakage is outstanding. For example, in the frequency range of 1300 Hz~3000 Hz, the sound leakage is reduced by more than 10 dB; in the frequency range of 2000 Hz~2700 Hz, the sound leakage is reduced by more than 20 dB. Compared to embodiment three, this scheme has a relatively balanced effect of reduced sound leakage within various frequency range, and this effect is better than the effect of schemes where the height of the holes are fixed, such as schemes of embodiment three, embodiment four, embodiment five, and etc. Compared to embodiment six, in the frequency range of 1000 Hz~1700 Hz and 2500 Hz~4000 Hz, this scheme has a better effect of reduced sound leakage than embodiment six.

Embodiment Eight

[0106] FIGS. **12**A and **12**B are schematic structures illustrating a bone conduction speaker according to some embodiments of the present disclosure. The bone conduction speaker may include an open housing **10**, a vibration board **21** and a transducer **22**. A perforative sound guiding hole **30** may be set on the upper portion of the sidewall of the housing **10**. One or more sound guiding holes may be arranged evenly or unevenly in one or more circles on the upper portion of the sidewall of the housing **10**. There may be 8 sound guiding holes **30**, and the shape of the sound guiding holes **30** may be circle.

[0107] After comparison of calculation results and test results, the effectiveness of this embodiment is basically the same with that of embodiment one, and this embodiment can effectively reduce sound leakage.

Embodiment Nine

[0108] FIGS. **13**A and **13**B are schematic structures illustrating a bone conduction speaker according to some embodiments of the present disclosure. The bone conduction speaker may include an open housing **10**, a vibration board **21** and a transducer **22**.

[0109] The difference between this embodiment and the above-described embodiment three is that to reduce sound leakage to greater extent, the sound guiding holes **30** may be arranged on the upper, central and lower portions of the sidewall **11**. The sound guiding holes **30** are arranged evenly or unevenly in one or more circles. Different circles are formed by the sound guiding holes **30**, one of which is set along the circumference of the bottom **12** of the housing **10**. The size of the sound guiding holes **30** are the same.

[0110] The effect of this scheme may cause a relatively balanced effect of reducing sound leakage in various frequency ranges compared to the schemes where the position of the holes are fixed. The effect of this design on reducing sound leakage is relatively better than that of other designs where the heights of the holes are fixed, such as embodiment three, embodiment four, embodiment five, etc.

Embodiment Ten

[0111] The sound guiding holes **30** in the above embodiments may be perforative holes without shields.

[0112] In order to adjust the effect of the sound waves guided from the sound guiding holes, a damping layer (not shown in the figures) may locate at the opening of a sound guiding hole **30** to adjust the phase and/or the amplitude of the sound wave.

[0113] There are multiple variations of materials and positions of the damping layer. For example, the damping layer may be made of materials which can damp sound waves, such as tuning paper, tuning cotton, nonwoven fabric, silk, cotton, sponge or rubber. The damping layer may be

attached on the inner wall of the sound guiding hole **30**, or may shield the sound guiding hole **30** from outside.

[0114] More preferably, the damping layers corresponding to different sound guiding holes **30** may be arranged to adjust the sound waves from different sound guiding holes to generate a same phase. The adjusted sound waves may be used to reduce leaked sound wave having the same wavelength. Alternatively, different sound guiding holes **30** may be arranged to generate different phases to reduce leaked sound wave having different wavelengths (i.e. leaked sound waves with specific wavelengths).

[0115] In some embodiments, different portions of a same sound guiding hole can be configured to generate a same phase to reduce leaked sound waves on the same wavelength (e.g. using a pre-set damping layer with the shape of stairs or steps). In some embodiments, different portions of a same sound guiding hole can be configured to generate different phases to reduce leaked sound waves on different wavelengths.

[0116] The above-described embodiments are preferable embodiments with various configurations of the sound guiding hole(s) on the housing of a bone conduction speaker, but a person having ordinary skills in the art can understand that the embodiments don't limit the configurations of the sound guiding hole(s) to those described in this application.

[0117] In the past bone conduction speakers, the housing of the bone conduction speakers is closed, so the sound source inside the housing is sealed inside the housing. In the embodiments of the present disclosure, there can be holes in proper positions of the housing, making the sound waves inside the housing and the leaked sound waves having substantially same amplitude and substantially opposite phases in the space, so that the sound waves can interfere with each other and the sound leakage of the bone conduction speaker is reduced. Meanwhile, the volume and weight of the speaker do not increase, the reliability of the product is not comprised, and the cost is barely increased. The designs disclosed herein are easy to implement, reliable, and effective in reducing sound leakage.

[0118] It is noticeable that above statements are preferable embodiments and technical principles thereof. A person having ordinary skill in the art is easy to understand that this disclosure is not limited to the specific embodiments stated, and a person having ordinary skill in the art can make various obvious variations, adjustments, and substitutes within the protected scope of this disclosure. Therefore, although above embodiments state this disclosure in detail, this disclosure is not limited to the embodiments, and there can be many other equivalent embodiments within the scope of the present disclosure, and the protected scope of this disclosure is determined by following claims.

1.-**17**. (canceled)

18. A method of reducing sound leakage, the method comprising:

providing a bone conduction speaker including:

a vibration board;

a transducer configured to cause the vibration board to vibrate;

a housing enclosing the vibration board and the transducer, the transducer causing the housing to vibrate, the vibration of the housing producing a leaked sound wave; and

at least one sound guiding hole located on the housing and configured to guide a sound wave inside the housing through the at least one sound guiding hole to an outside of the housing, the guided sound wave interfering with the leaked sound wave, the interference reducing an amplitude of the leaked sound wave.

19. The method of claim **18**, wherein:

the at least one sound guiding hole includes two sound guiding holes located on the housing.

20. The method of claim **18**, wherein:

the housing includes a bottom or a sidewall; and

the at least one sound guiding hole located on the bottom or the sidewall of the housing.

21. The method of claim **18**, wherein a location of the at least one sound guiding hole is determined based on at least one of: a vibration frequency of the transducer, a shape of the at least one sound guiding hole, a quantity of the at least one sound guiding hole, a target region where the amplitude of the leaked sound wave is to be reduced, or a frequency range within which the amplitude of the leaked sound wave is to be reduced.

22. The method of claim **18**, wherein the at least one sound guiding hole includes a damping layer, the damping layer being configured to adjust a phase and amplitude of the guided sound wave.

23. The method of claim **18**, wherein the guided sound wave includes at least two sound waves having a same phase, the at least two sound waves configured to reduce an amplitude of the leaked sound wave having same wavelength.

24. The method of claim **18**, wherein the guided sound wave includes at least two sound waves having different phases, the at least two sound waves configured to reduce an amplitude of the leaked sound wave having different wavelengths.

25. The method of claim **18**, wherein the at least one sound guiding hole includes at least two portions, the at least two portions being configured to generate at least two sound waves having a same phase and configured to reduce the amplitude of the leaked sound wave having same wavelength.

26. The method of claim **18**, wherein the at least one sound guiding hole includes at least two different portions, the two different portions being configured to generate at least two sound waves having different phases and configured to reduce the amplitude of the leaked sound wave having different wavelengths.

27. A bone conduction speaker comprising:

a transducer configured to cause the vibration board to vibrate;

a housing enclosing the vibration board and the transducer, the transducer causing the housing to vibrate, the vibration of the housing producing a leaked sound wave; and

at least one sound guiding hole located on the housing and configured to guide a sound wave inside the housing through the at least one sound guiding hole to an outside of the housing, the guided sound wave interfering with the leaked sound wave, the interference reducing an amplitude of the leaked sound wave.

28. The bone conduction speaker of claim **27**, wherein:

the housing includes a bottom or a sidewall; and

the at least one sound guiding hole located on the bottom or the sidewall of the housing.

29. The bone conduction speaker of claim **27**, wherein the housing includes a cylindrical sidewall, the at least one sound guiding hold located on the cylindrical sidewall.

30. The bone conduction speaker of claim **29**, wherein the at least one sound guiding hole includes two sound guiding holes.

31. The bone conduction speaker of claim **30**, wherein the two sound guiding holes locate at different heights along the axial direction of the sidewall.

32. The bone conduction speaker of claim **28**, wherein the at least one sound guiding hole locates at the center of the bottom.

33. The bone conduction speaker of claim **27**, wherein the at least one sound guiding hole is a perforative hole.

34. The bone conduction speaker of claim **27**, wherein the at least one sound guiding hole includes a damping layer, the damping layer being configured to adjust a phase and amplitude of the guided sound wave.

35. The bone conduction speaker of claim **34**, wherein the damping layer is a tuning paper, tuning cotton, a nonwoven fabric, a silk, a cotton, a sponge or a rubber.

36. The bone conduction speaker of claim **27**, wherein the shape of the at least one sound guiding hole is circle, ellipse, quadrangle, or linear.

37. The bone conduction speaker of claim **27**, wherein the transducer includes one of:

a magnetic component and a voice coil, or

a piezoelectric ceramics.

* * * * *