US010306351B2

(12) **United States Patent**
Kim et al.

(10) **Patent No.: US 10,306,351 B2**
(45) **Date of Patent: May 28, 2019**

(54) **PORTABLE SOUND DEVICE**

(71) Applicant: **LG ELECTRONICS INC.**, Seoul (KR)

(72) Inventors: **Donghan Kim**, Seoul (KR); **Siyoung Park**, Seoul (KR)

(73) Assignee: **LG ELECTRONICS INC.**, Seoul (KR)

(*) Notice: Subject to any disclaimer, the term of this patent is extended or adjusted under 35 U.S.C. 154(b) by 0 days.

(21) Appl. No.: **16/017,738**

(22) Filed: **Jun. 25, 2018**

(65) **Prior Publication Data**

US 2019/0045295 A1 Feb. 7, 2019

Related U.S. Application Data

(60) Provisional application No. 62/541,075, filed on Aug. 3, 2017.

(30) **Foreign Application Priority Data**

Aug. 18, 2017 (KR) 10-2017-0104744
Nov. 20, 2017 (KR) 10-2017-0154846
Mar. 23, 2018 (KR) 10-2018-0033930

(51) **Int. Cl.**
H04R 1/10 (2006.01)

(52) **U.S. Cl.**
CPC ***H04R 1/1066*** (2013.01); ***H04R 1/10*** (2013.01); ***H04R 1/105*** (2013.01); ***H04R 1/1016*** (2013.01);
(Continued)

(58) **Field of Classification Search**
CPC .. H04R 1/1066; H04R 1/1016; H04R 1/1033; H04R 1/105; H04R 2420/07;
(Continued)

(56) **References Cited**

U.S. PATENT DOCUMENTS

9,016,607 B2 4/2015 Wong et al.
9,055,364 B1 6/2015 Uh et al.
(Continued)

FOREIGN PATENT DOCUMENTS

EP 2645509 10/2013
EP 3107313 12/2016
(Continued)

OTHER PUBLICATIONS

Korean Intellectual Property Office Application No. 10-2018-0033930, Prior Art Search Report dated Apr. 4, 2018, 6 pages.
(Continued)

Primary Examiner — Tuan D Nguyen
(74) *Attorney, Agent, or Firm* — Lee, Hong, Degerman, Kang & Waimey

(57) **ABSTRACT**

A portable sound device includes: a main body having an audio output unit holder; an audio output unit detachably mountable in the audio output unit holder and configured to output audio; an audio cable coupled to the audio output unit and configured to transmit an audio signal to the audio output unit, one end of the audio cable located outside the main body and the other end of the audio cable located inside the main body; and a rotary module rotatably mounted in the main body and configured to wind or unwind the audio cable according to a rotational direction of the rotary module.

17 Claims, 14 Drawing Sheets

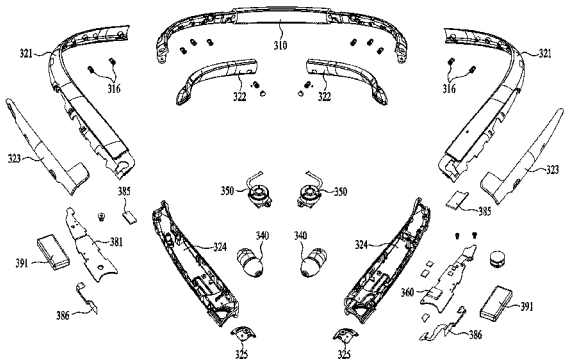

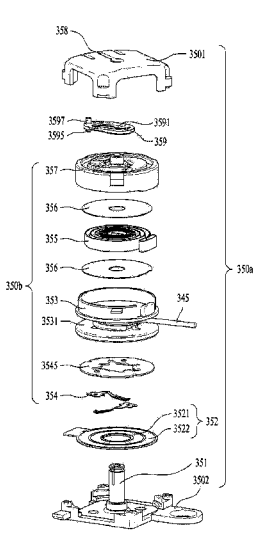

(52) **U.S. Cl.**
CPC ***H04R 1/1033*** (2013.01); *H04R 2420/07* (2013.01)

(58) **Field of Classification Search**
CPC B65H 75/406; B65H 75/285; B65H 75/4431; B65H 2701/3919
See application file for complete search history.

(56) **References Cited**

U.S. PATENT DOCUMENTS

9,918,155	B2	3/2018	Kim et al.
2011/0139918	A1	6/2011	Chen
2014/0198927	A1	7/2014	Cheng

FOREIGN PATENT DOCUMENTS

EP	3188499	7/2017
KR	200336095	12/2003
KR	101471904	12/2014
KR	1020160048452	5/2016
KR	101687623	12/2016
KR	1020160147687	12/2016
KR	101710140	2/2017
KR	101716870	3/2017
KR	101752771	6/2017
KR	101758285	7/2017
KR	1020170087035	7/2017

OTHER PUBLICATIONS

Korean Intellectual Property Office Application No. 10-2017-0154846, Office Action dated Jun. 28, 2018, 5 pages.
European Patent Office Application Serial No. 18152809.2, Search Report dated Jun. 13, 2018, 8 pages.
PCT International Application No. PCT/KR2018/005558, Notification of Transmittal of the International Search Report and the Written Opinion of the International Searching Authority, or Declaration dated Aug. 21, 2018, 11 pages.
U.S. Appl. No. 15/891,541, Office Action dated Sep. 19, 2018, 13 pages.

FIG. 1

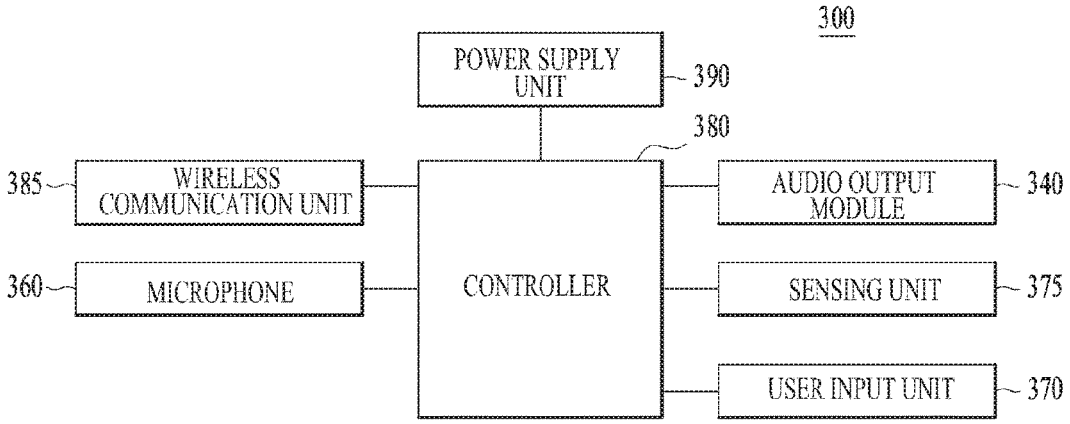
300
POWER SUPPLY UNIT
390
380
385
WIRELESS COMMUNICATION UNIT
AUDIO OUTPUT MODULE
340
360
MICROPHONE
CONTROLLER
SENSING UNIT
375
USER INPUT UNIT
370

FIG. 2

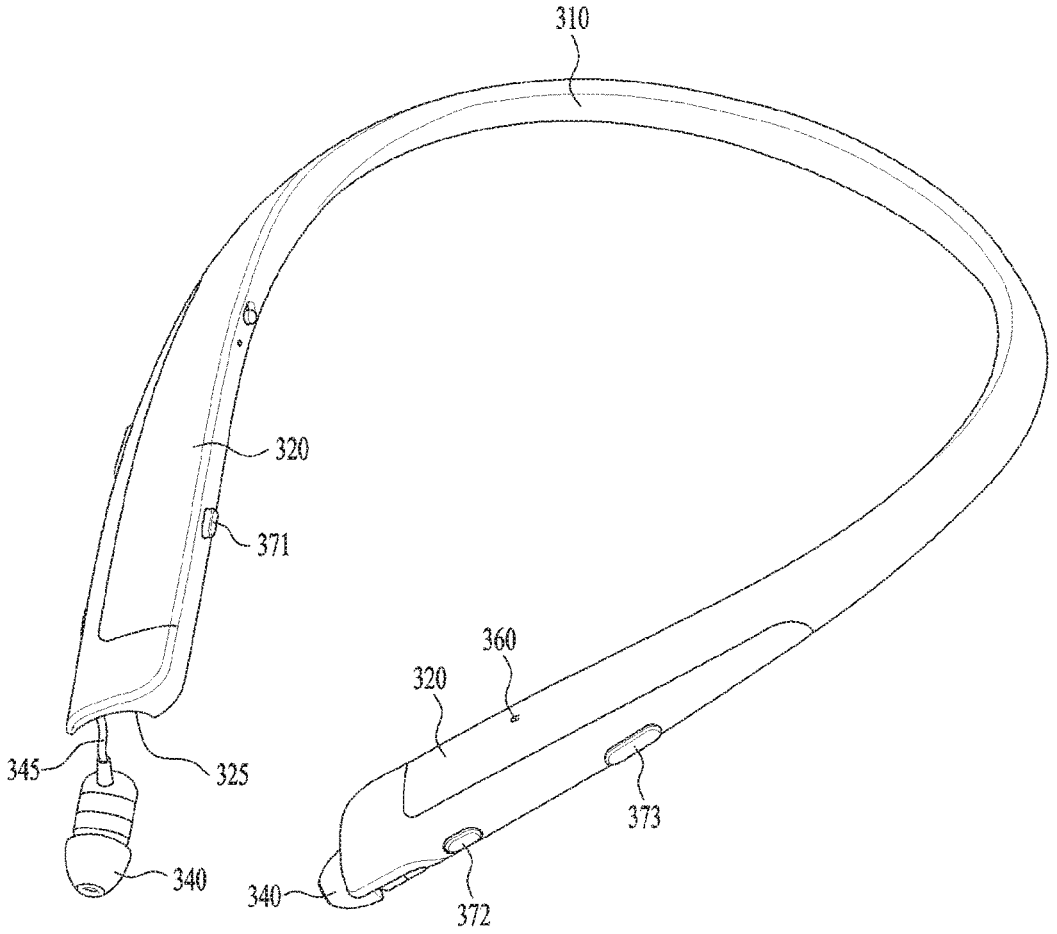

FIG. 3

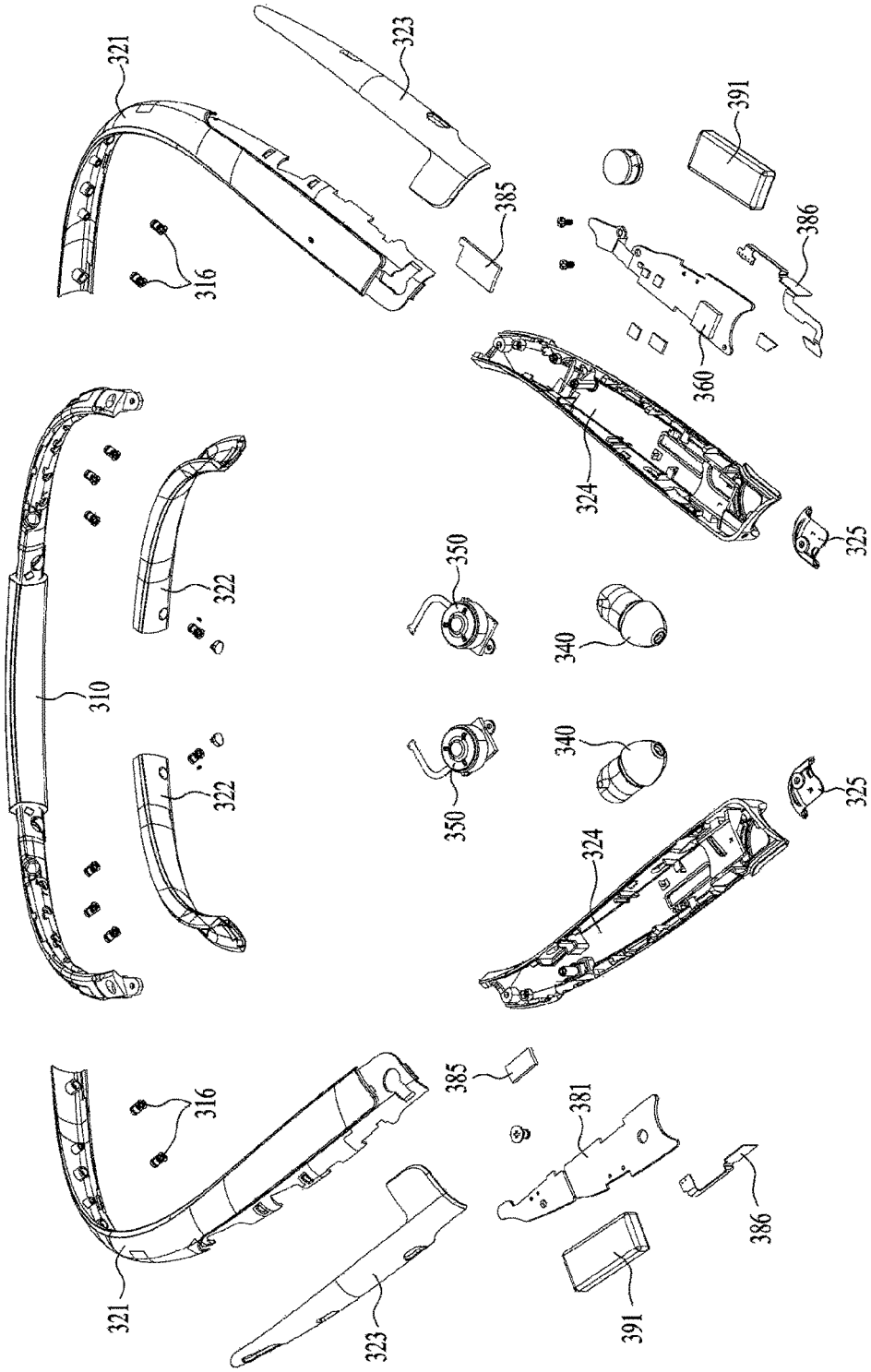

FIG. 4

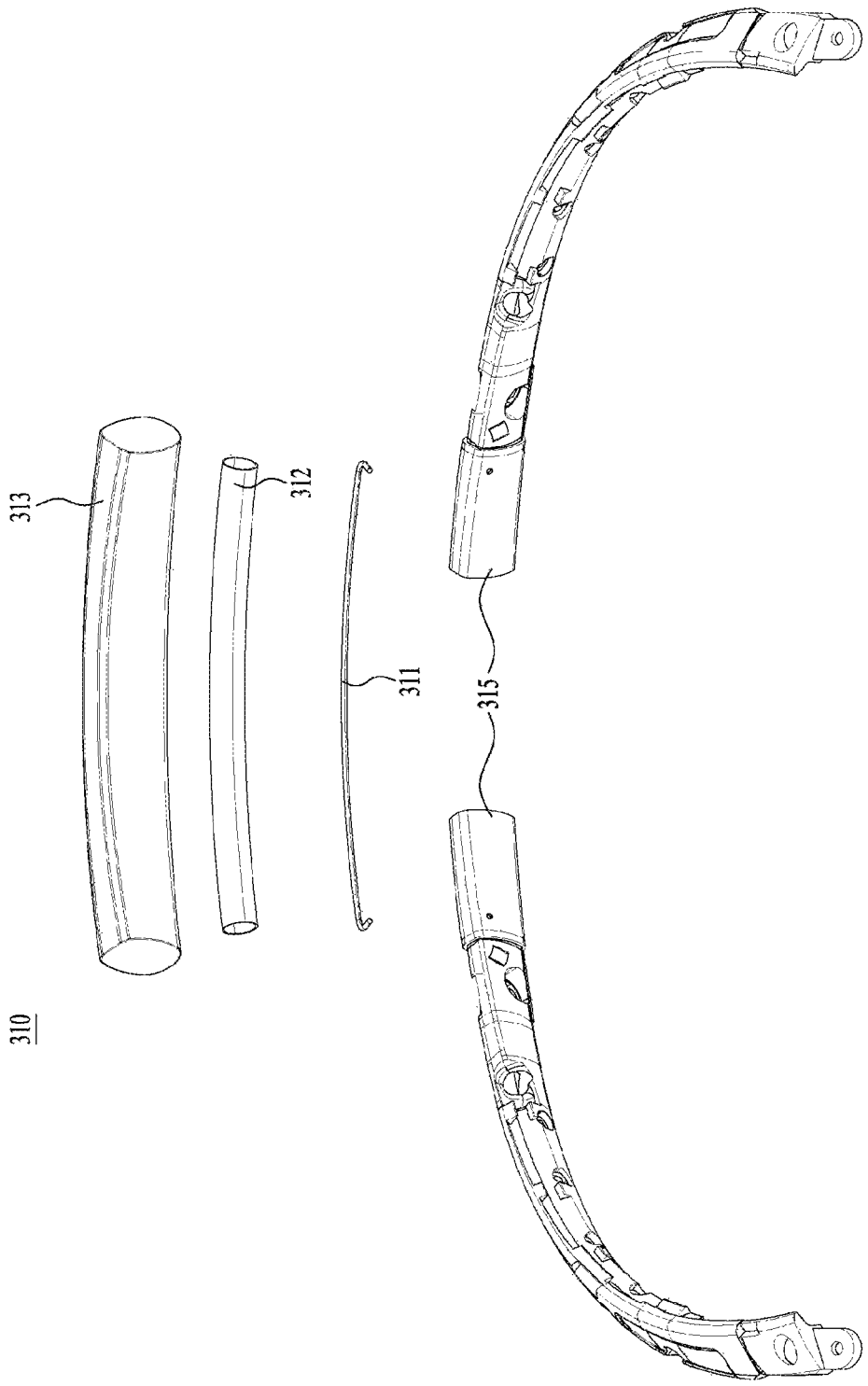

FIG. 5

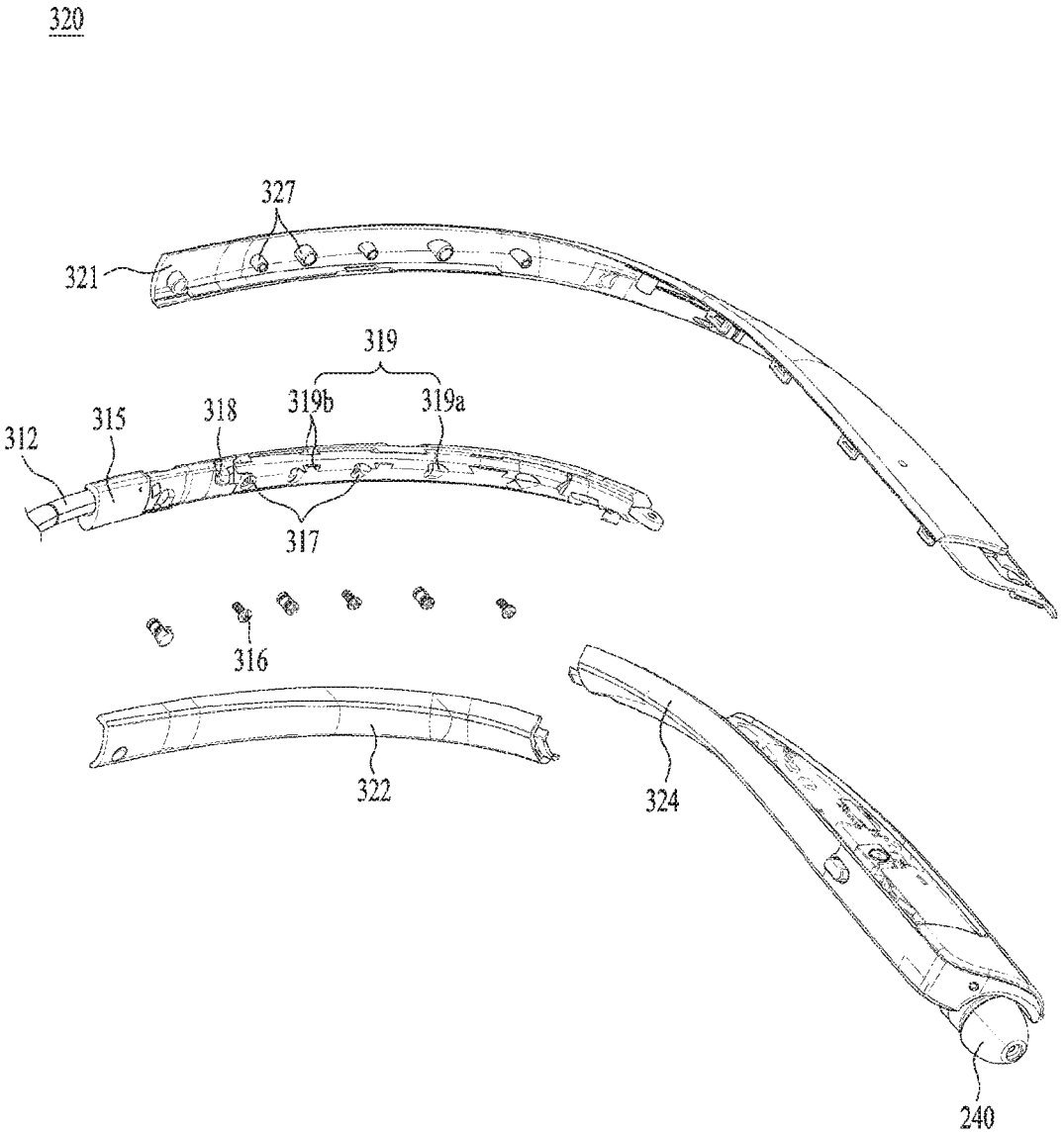

FIG. 6

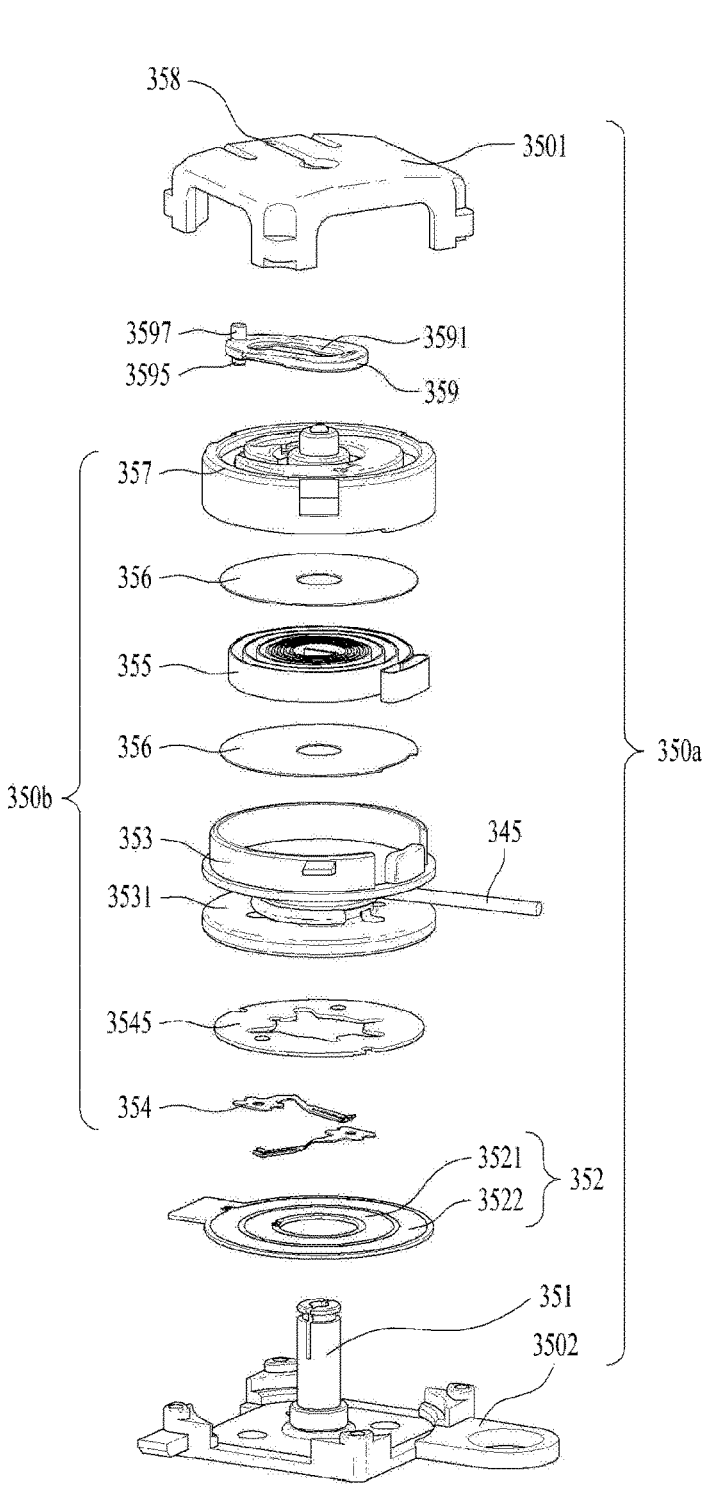
350
358
3501
3597
3591
3595
359
357
356
355
356
350b
350a
353
345
3531
3545
354
3521
3522
352
351
3502

FIG. 7

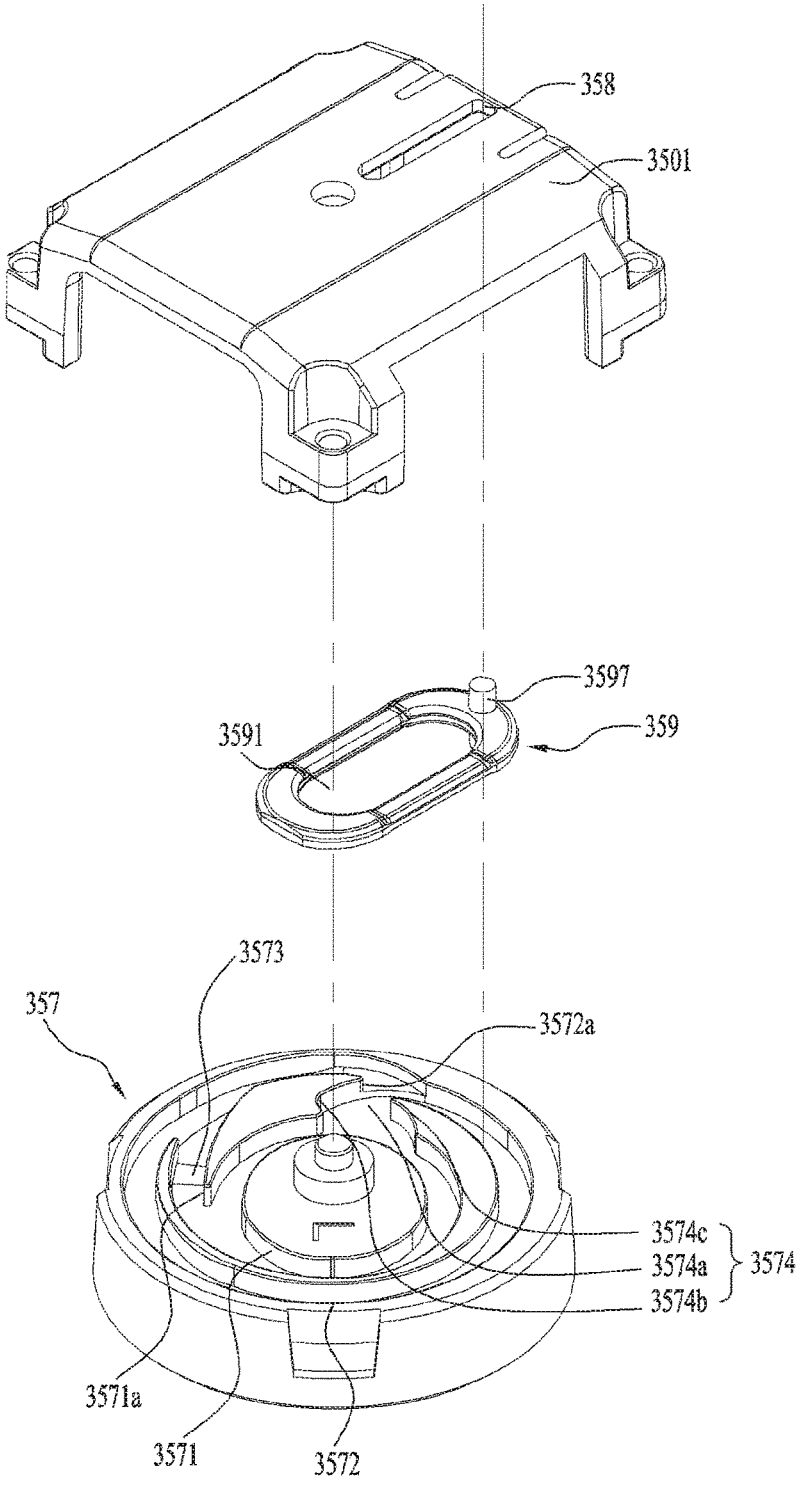
358
3501
3597
3591
359
3573
357
3572a
3574c
3574a
3574
3574b
3571a
3571
3572

FIG. 8

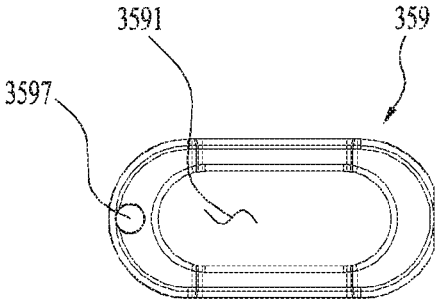

(a)

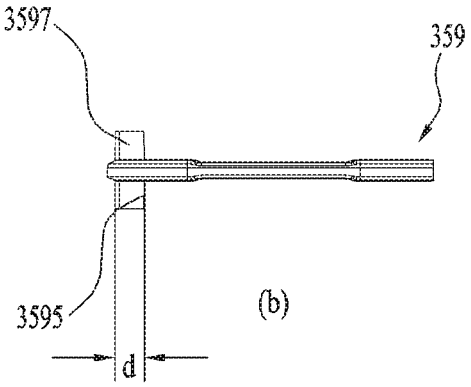

(b)

FIG. 9

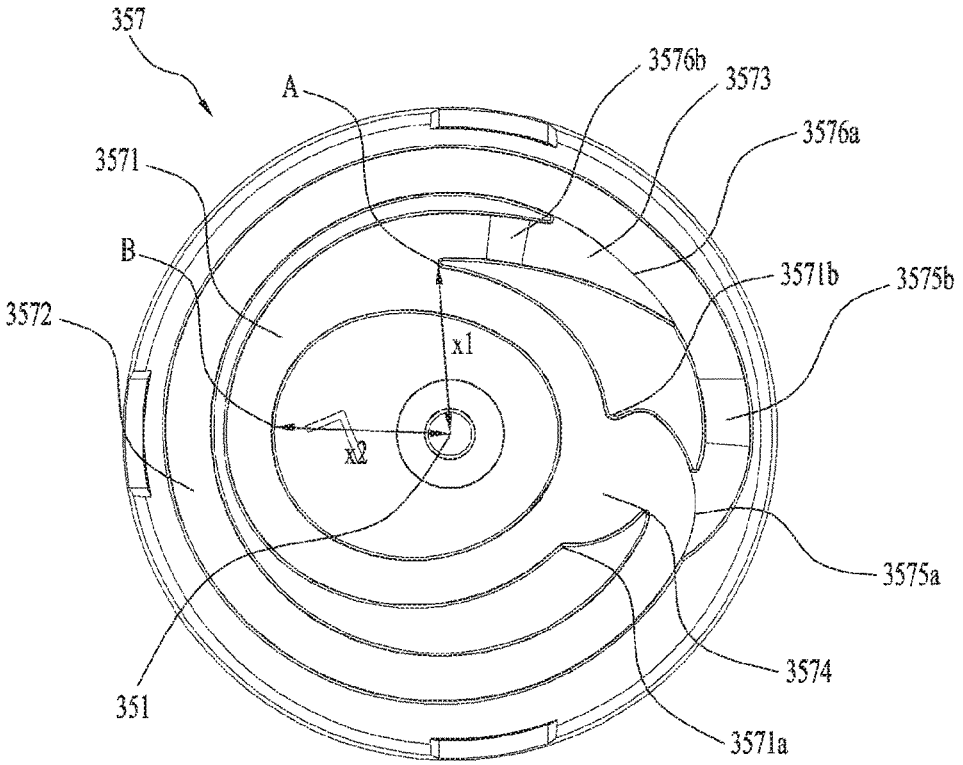
357
A
3576b
3573
3576a
3571
B
3571b
3575b
3572
x1
x2
3575a
3574
351
3571a

FIG. 10

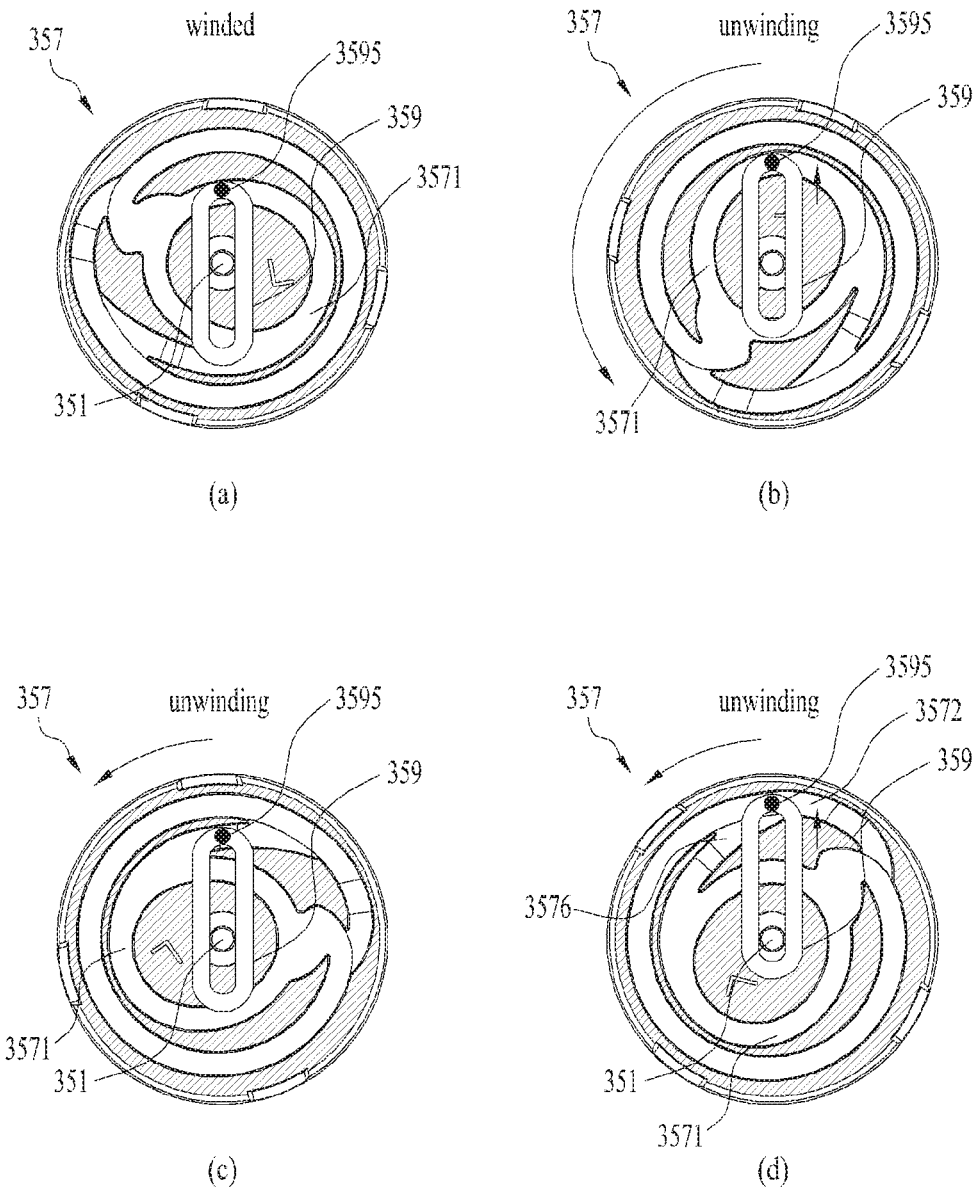
357
winded
3595
359
3571
351
(a)
357
unwinding
3595
359
3571
(b)
357
unwinding
3595
359
3571
351
(c)
357
unwinding
3595
3572
359
3576
351
3571
(d)

FIG. 11

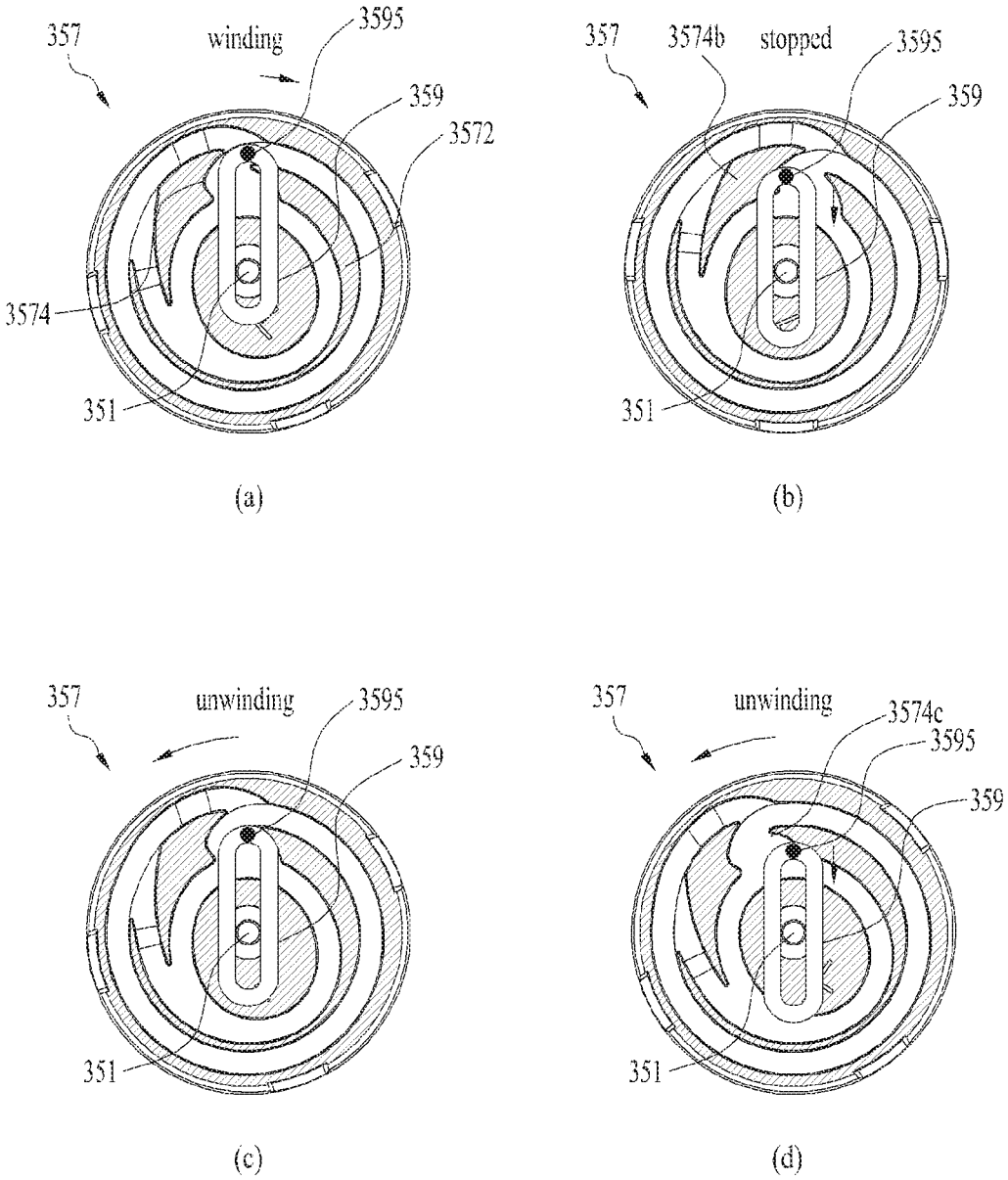
357
winding
3595
359
3572
3574
351
(a)
357
3574b
stopped
3595
359
351
(b)
357
unwinding
3595
359
351
(c)
357
unwinding
3574c
3595
359
351
(d)

FIG. 12

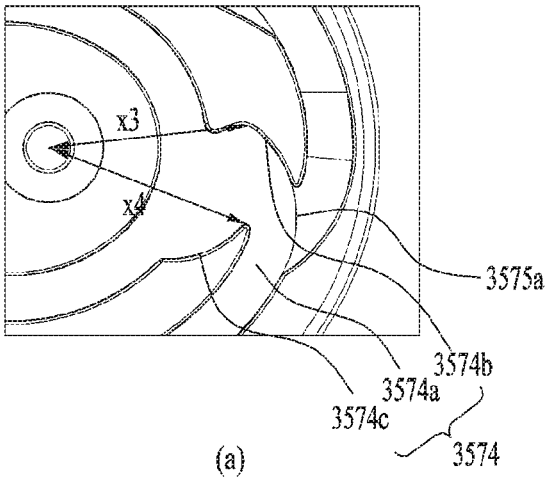

(a)

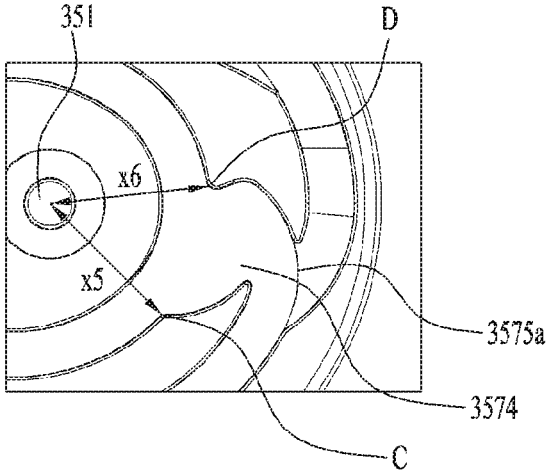

(b)

FIG. 13

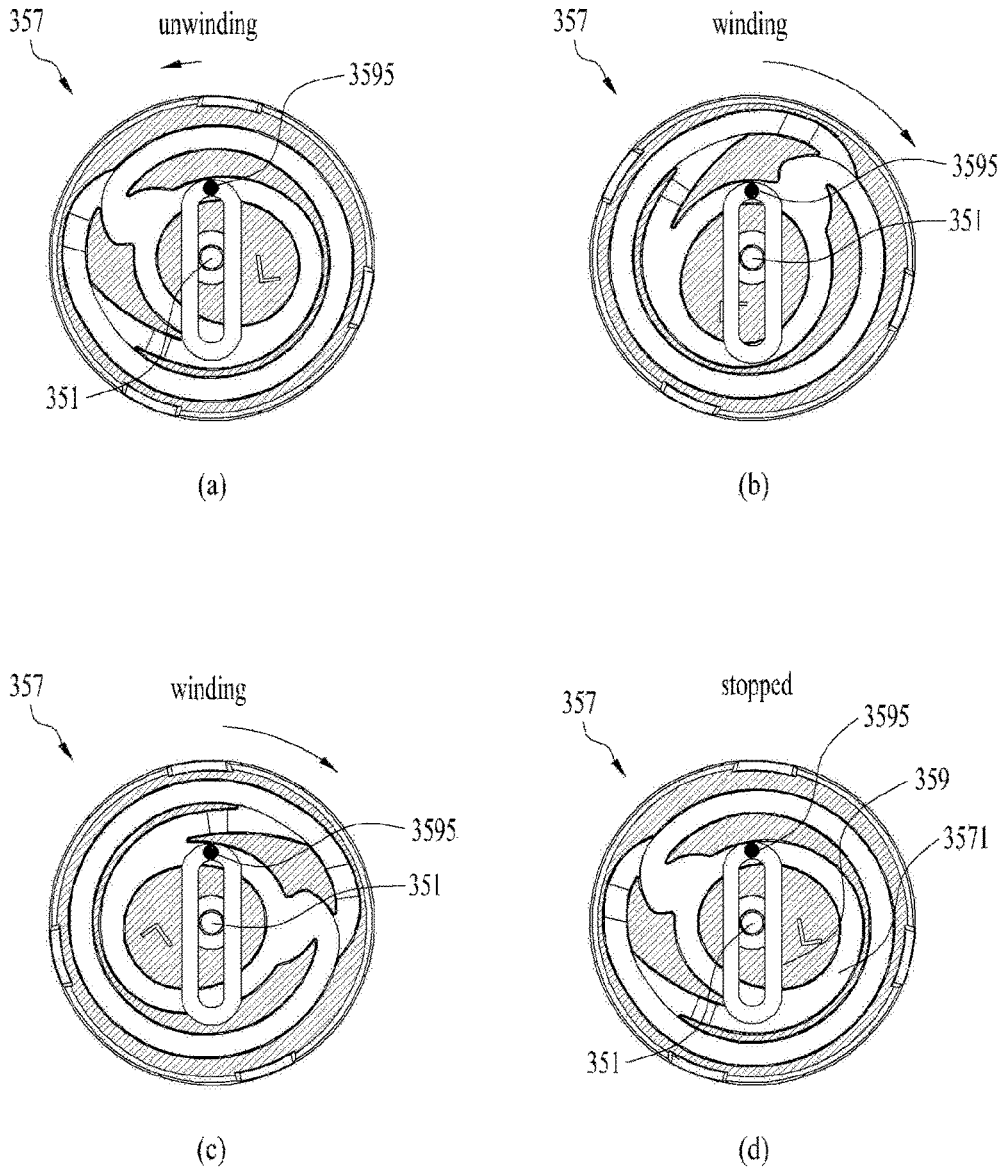
357
unwinding
3595
351
(a)
357
winding
3595
351
(b)
357
winding
3595
351
(c)
357
stopped
3595
359
3571
351
(d)

FIG. 14

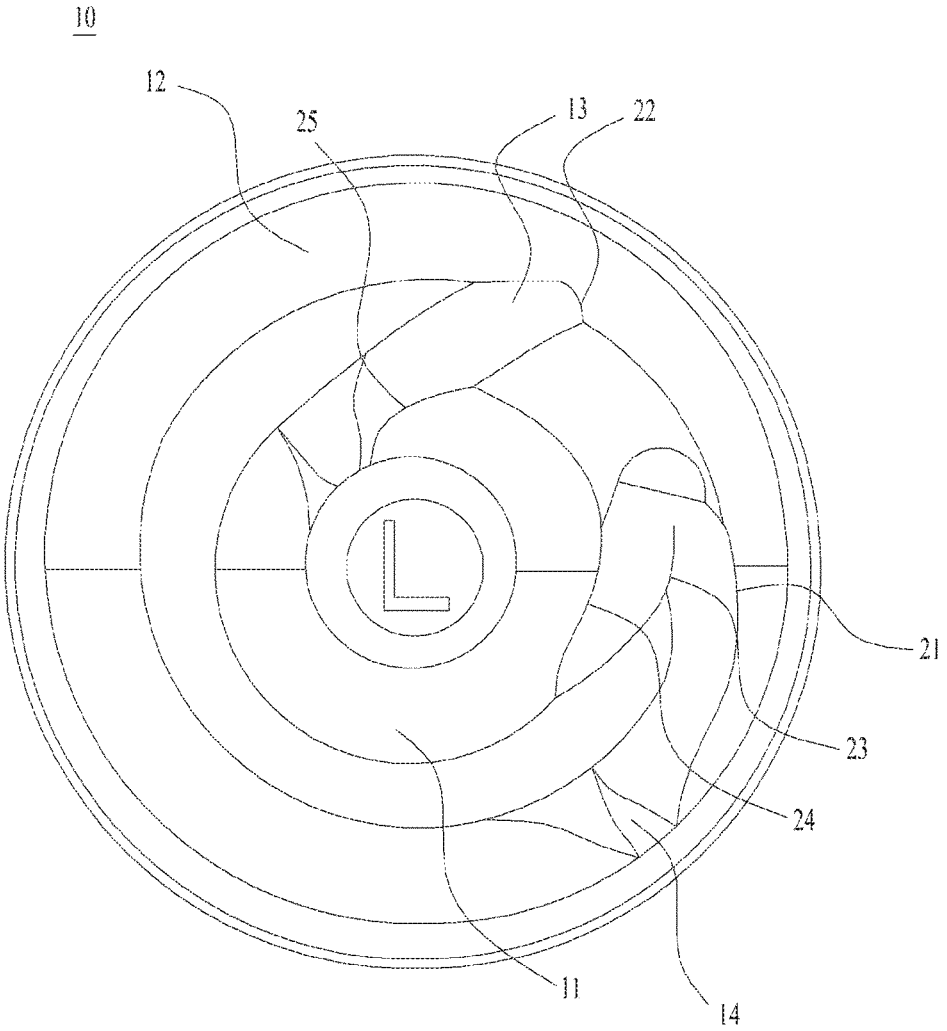

PORTABLE SOUND DEVICE

CROSS-REFERENCE TO RELATED APPLICATIONS

Pursuant to 35 U.S.C. § 119, this application claims the benefit of U.S. Provisional Application No. 62/541,075 filed on Aug. 3, 2017, and also claims the benefit of earlier filing dates and right of priority to Korean Patent Application Nos. 10-2017-0104744 filed on Aug. 18, 2017; 10-2017-0154846 filed on Nov. 20, 2017; and 10-2018-0033930 filed on Mar. 23, 2018, the contents of which are all hereby incorporated by reference herein in their entirety.

BACKGROUND OF THE INVENTION

Field of the Invention

The present invention relates to a portable sound (audio) device that receives a sound signal from a terminal through wireless communication with the terminal and transmits a control signal for controlling the terminal to the terminal.

Discussion of the Related Art

A portable sound device is a device that receives a sound signal from a terminal and transmits information about sound collected through a microphone to the terminal. Conventional portable sound devices use a wired mode, in which a portable sound device is connected to a terminal through an ear jack in order to receive a sound signal from the terminal. In recent years, however, the demand for a wireless communication type portable sound device has been increased due to the convenience in mobility and use thereof.

A portable sound device has an audio output module, through which music can be played and a telephone conversation can be performed. The portable sound device may be connected to a base station in order to have a telephone conversation, may be directly connected to an external server in order to acquire sound data, and may be connected to a terminal in order to perform the above functions through pairing.

Various types of portable sound devices based on the portability thereof, such as a headphone-type portable sound device, which is placed on the head of a user in the form of a hair band such that the user can carry the portable sound device, an ear-hanging type portable sound device, and an in-ear type portable sound device, have been developed.

A sound cable, which connects an earbud, which is inserted into the ear of a user to output sound, to a body, which functions as a holder, is long. When not in use, therefore, the cable may be tangled or caught on something, which is inconvenient. For this reason, a rotary module for receiving the sound cable in the body may be provided.

SUMMARY OF THE INVENTION

Accordingly, the present invention is directed to a portable sound device that substantially obviates one or more problems due to limitations and disadvantages of the related art.

An object of the present invention is to provide a portable sound device that receives a sound signal from a terminal through wireless communication with the terminal and transmits a control signal for controlling the terminal to the terminal, wherein a number of members constituting a rotary module is reduced, whereby the portable sound device has a compact structure.

Additional advantages, objects, and features of the invention will be set forth in part in the description which follows and in part will become apparent to those having ordinary skill in the art upon examination of the following or may be learned from practice of the invention. The objectives and other advantages of the invention may be realized and attained by the structure particularly pointed out in the written description and claims hereof as well as the appended drawings.

To achieve these objects and other advantages and in accordance with the purpose of the invention, as embodied and broadly described herein, a portable sound device includes: a main body having an audio output unit holder; an audio output unit detachably mountable in the audio output unit holder and configured to output audio; an audio cable coupled to the audio output unit and configured to transmit an audio signal to the audio output unit, one end of the audio cable located outside the main body and the other end of the audio cable located inside the main body; and a rotary module rotatably mounted in the main body and configured to wind or unwind the audio cable according to a rotational direction of the rotary module.

According to one aspect of the present invention, the rotary module includes: a stationary unit fixed to the main body, the stationary unit comprising a shaft; a rotary unit configured to be rotatable about the shaft, the rotary unit comprising a track; and a stopper inserted into the track such that a position of the stopper varies in the track when the rotary unit is rotated. Further, the track includes: a first track formed around the shaft such that a distance of the first track from the shaft is inconsistent; a second track located outside the first track; a connection track interconnecting the first track and the second track; and a stop track located between the first track and the second track.

According to an embodiment of the present invention, a portable sound device includes: a main body having an audio output unit holder; an audio output unit detachably mountable in the audio output unit holder and configured to output audio; an audio cable coupled to the audio output unit and configured to transmit an audio signal to the audio output unit, one end of the audio cable located outside the main body and the other end of the audio cable located inside the main body; and a rotary module rotatably mounted in the main body and configured to wind or unwind the audio cable according to a rotational direction of the rotary module, the rotary module including: a stationary unit fixed to the main body, the stationary unit comprising a shaft; a rotary unit configured to be rotatable about the shaft, the rotary unit comprising a track; and a stopper inserted into the track such that a position of the stopper varies in the track when the rotary unit is rotated, and the track including: a first track formed around the shaft such that a distance of the first track from the shaft is inconsistent; a second track located outside the first track; a connection track interconnecting the first track and the second track; and a stop track located between the first track and the second track.

It is to be understood that both the foregoing general description and the following detailed description of the present invention are exemplary and explanatory and are intended to provide further explanation of the invention as claimed.

BRIEF DESCRIPTION OF THE DRAWINGS

The present invention will become more fully understood from the detailed description given herein below and the

accompanying drawings, which are given by illustration only, and thus are not limitative of the present invention, and wherein:

FIG. **1** is a block diagram showing the structure of a portable sound device according to an embodiment of the present invention;

FIG. **2** is a perspective view of the portable sound device according to an embodiment of the present invention;

FIG. **3** is an exploded perspective view of the portable sound device according to an embodiment of the present invention;

FIG. **4** is an exploded perspective view of an elastic band of the portable sound device according to an embodiment of the present invention;

FIG. **5** is a view showing coupling between a housing and the elastic band of the portable sound device according to an embodiment of the present invention;

FIG. **6** is an exploded perspective view of a rotary module of the portable sound device according to an embodiment of the present invention;

FIG. **7** is an exploded perspective view showing a track, a bracket, and a stop plate of the portable sound device according to an embodiment of the present invention;

FIG. **8** is a view showing the stop plate according to an embodiment of the present invention;

FIG. **9** is a view showing the shape of the track of the portable sound device according to an embodiment of the present invention;

FIGS. **10**, **11**, and **13** are views illustrating various embodiments in which a stopper of the portable sound device according to the present invention moves along the track;

FIG. **12** is an enlarged view showing a stop track according to an embodiment of the present invention; and

FIG. **14** is a view showing a track of a conventional portable sound device.

DETAILED DESCRIPTION OF THE INVENTION

Description will now be given in detail according to exemplary embodiments disclosed herein, with reference to the accompanying drawings. For the sake of brief description with reference to the drawings, the same or equivalent components may be provided with the same reference numbers, and description thereof will not be repeated. In general, a suffix such as "module" and "unit" may be used to refer to elements or components. Use of such a suffix herein is merely intended to facilitate description of the specification, and the suffix itself is not intended to give any special meaning or function. In the present disclosure, that which is well-known to one of ordinary skill in the relevant art has generally been omitted for the sake of brevity. The accompanying drawings are used to help easily understand various technical features and it should be understood that the embodiments presented herein are not limited by the accompanying drawings. As such, the present disclosure should be construed to extend to any alterations, equivalents and substitutes in addition to those which are particularly set out in the accompanying drawings.

It will be understood that although the terms first, second, etc. may be used herein to describe various elements, these elements should not be limited by these terms. These terms are generally only used to distinguish one element from another.

It will be understood that when an element is referred to as being "connected with" another element, the element can be directly connected with the other element or intervening elements may also be present. In contrast, when an element is referred to as being "directly connected with" another element, there are no intervening elements present.

A singular representation may include a plural representation unless it represents a definitely different meaning from the context.

Terms such as "include" or "has" are used herein and should be understood that they are intended to indicate an existence of several components, functions or steps, disclosed in the specification, and it is also understood that greater or fewer components, functions, or steps may likewise be utilized.

FIG. **1** is a block diagram of a portable sound device **300** according to an embodiment of the present invention. FIG. **2** is a perspective view of the portable sound device **300** according to an embodiment of the present invention. For convenience in describing the structure of the portable sound device **300** shown in FIG. **1**, reference is also to be made to FIG. **2**.

The portable sound device **300** according to an embodiment of the present invention includes a controller **380**, a wireless communication unit **385**, an audio output module **340**, a sensing unit **375**, a microphone **360**, a user input unit **370**, and a power supply unit **390**.

The audio output module **340** outputs sound according to a sound signal. A representative example of the audio output module **340** is an earbud, which is inserted into an ear of a user in order to transmit sound to the ear.

The microphone **360** processes an external sound signal into electrical voice data. The processed voice data is transmitted to an external terminal or an external server via the wireless communication unit **385**. The microphone **360** may use various noise removal algorithms for removing noise generate when receiving an external sound signal.

The sensing unit **375** recognizes the state of the portable sound device **300** and the surroundings of the portable sound device **300**. The sensing unit **375** may include an illuminance sensor for sensing brightness around the portable sound device **300**, a touch sensor for sensing a touch input, a gyro sensor for sensing the tilt and position of the portable sound device **300**, and an earbud switch for sensing whether the earbud **340** is located in an earbud holder **325**.

The user input unit **370** allows a user to control the portable sound device **300**. An example of the user input unit **370** may include a talk button **372**, a volume button **373**, a power button **371**, and a reception button for receiving a sound cable or audio cable **345** in a housing **320**.

The user input unit **370** may include only a talk button **372** and a pair of volume buttons **373**. In addition, the user input unit **370** may include a play/stop button and a sequence change button. The size of the portable sound device **300** is limited, and the user may push the user input unit **370** without looking thereat. If the number of buttons is large, it would be difficult for the user to distinguish between the buttons. For this reason, a limited number of buttons is used. In this case, the amount of time for which the buttons are pushed and the number of times that the buttons are pushed may be varied, and a plurality of buttons may be combined to input various control commands.

Since the user carries the portable sound device **300**, the possibility of losing the portable sound device **300** is low. However, generally, terminals may be lost. For this reason, the user input unit **370** may perform an alarm function. For example, two buttons of the user input unit **370** may be simultaneously pushed for a predetermined amount of time. In this case, a lost terminal connected to the portable sound

device through BLUETOOTH™ may sound an alarm, whereby the lost terminal may be easily found.

In addition, a voice recording function of an external terminal connected to the portable sound device through BLUETOOTH™ may be activated to store voices collected through the microphone **360** of the portable sound device **300**.

Only functions related to conversation and functions related to playback of sound media are controllable using a conventional portable sound device. However, the portable sound device according to the present invention is characterized in that the portable sound device has diversified functions.

FIG. **2** is a perspective view of the portable sound device **300** according to an embodiment of the present invention when viewed in one direction. A main body of the portable sound device **300** according to an embodiment of the present invention includes an elastic band **310** and a housing **320**. As shown in FIG. **2**, the main body is curved in the shape of a C.

The housing **320**, in which electronic parts are received, is provided at each end of the elastic band **310**, which is placed on the neck of the user. The elastic band **310** and the housing **320** are partitioned based on the functions of the portable sound device. Consequently, the elastic band **310** and the housing **320** may be integrally formed, or may overlap each other.

The elastic band **310** has elasticity so as to be deformed within a predetermined range when force is applied thereto and to return to the original state thereof when the force is removed. If the distance between the opposite housings **320** is not sufficient for the neck of the user to pass between the housings **320**, the housings **320** may be spaced apart from each other due to the elasticity of the elastic band **310** such that the elastic band **310** is placed on the neck of the user or removed from the neck of the user.

The shape and length of the elastic band **310** are set so as to minimize a foreign-body sensation when the elastic band **310** is placed on the neck of the user. For example, the elastic band **310** may be formed in the shape of a curved cylinder or a twisted tape having surfaces and a thickness. If the elastic band **310** is formed in the shape of a twisted tape, the inner surface of the elastic band **310** is placed on the rear of the neck of the user, and the outer surface of the elastic band **310** faces the rear of the neck of the user. The connection between the elastic band **310** and each housing **320** may be twisted such that the outer surface of each housing faces the front or the top of the user and the inner surface of each housing faces the rear or the collarbone of the user.

Housings **320** are coupled to the opposite ends of the elastic band **310** so as to be located at opposite ends of the C-shaped portable sound device **300**. Inside and outside the housings **320** are disposed various components, such as a main board **381**, the wireless communication unit **385**, a battery **391**, and a rotary module **350**.

As shown in FIG. **3**, the C-shaped portable sound device **300** may be carried while being placed on the neck of the user. At this time, the sensing unit **375** may sense whether the user is wearing the portable sound device **300**. For example, the sensing unit **375** may be a displacement sensor located at the elastic band **310** for sensing a change in the curvature of the elastic band **310**. The displacement sensor may sense whether the housings **320** are spaced apart from each other when the user puts on the portable sound device **300**. In this case, the curvature of the elastic band **310** is gently changed. Consequently, it may be determined that the user will use the portable sound device **300**, and the portable sound device **300** may be powered on, or the portable sound device **300** may be synchronized with an external terminal.

In order to more accurately determine whether the user wears the portable sound device **300** or the housings **320** have been spaced apart from each other while the user is carrying the portable sound device, additional curvature of the elastic band **310** after the curvature of the elastic band **310** has been greatly changed may also be considered. When the curvature of the elastic band **310** is greatly changed to a first size and then is fixed to a second size, which is less curved than the state in which the portable sound device **300** remains unused, it may be determined that the portable sound device **300** has been placed on the neck of the user.

In addition to the displacement sensor, a temperature sensor, an optical sensor, or a heartbeat sensor may be provided at the surface of the portable sound device that comes into contact with the neck of the user when the user puts on the portable sound device **300**. When the body temperature is sensed, when brightness around the portable sound device is reduced, or when a heartbeat is sensed, it may be determined that the user is wearing the portable sound device, and the portable sound device **300** may be powered on, or the wireless communication unit **385** may be activated for synchronization with an external terminal.

Alternatively, a switch configured to be physically pushed may be used. When the user wears the portable sound device **300**, the switch may be pushed to generate an ON signal. When the switch remains on for a predetermined amount of time or more, the portable sound device **300** may be powered on, or may be synchronized with an external terminal.

The sensing unit **375** may include a plurality of switches. In this case, a plurality of values may be combined to correctly determine whether the user is wearing the portable sound device **300**.

FIG. **3** is an exploded perspective view of the portable sound device **300** according to an embodiment of the present invention.

Each of the housings **320**, coupled to opposite ends of the elastic band **310**, includes an upper case **321** and a lower case **324**. Between the upper case **321** and the lower case **324** are mounted the main board **381**, the wireless communication unit **385**, the battery **391**, the microphone **360**, and the rotary module **350**.

The housings **320** are manufactured by injection-molding a polymer material. For example, the housings **320** may be made of plastic, such as polystyrene (PS). The housings **320** may partially include a different material, such as metal, glass, or leather, in a portion thereof.

The housings **320** are made of polystyrene, which exhibits high rigidity, in order to protect the components therein. In addition, the surfaces of the housings **320** may be coated with polyurethane such that the housings can come into tight contact with the body of the user. When the surfaces of the housings **320** are coated with polyurethane, the portable sound device **300** may have an external appearance that provides a sense of unity. Since the elastic band **310** and the housings **320** come into tight contact with the skin of the user, the portable sound device **300** does not shake when the user moves, whereby the wearing sensation is improved.

The portable sound device **300**, which is placed on the body of the user, is easily exposed to moisture, such as sweat. For this reason, the portable sound device **300** has a waterproofing function in order to improve the durability thereof. A rib or a waterproofing member may be interposed in the gap between the upper case **321** and the lower case **324** in order to prevent water from permeating therethrough. Even though a separate waterproofing member is not pro-

vided, the upper case **321** and the lower case **324** may come into tight contact with each other through polyurethane coating.

The wireless communication unit **385** and the microphone **360** are mounted on the main board **381**, which is mounted in one of the housings **320**, and are connected to the battery **391**, the user input unit **370**, and the audio output module **340**. The components mounted in the housings **320** may be disposed symmetrically or asymmetrically. Only the components mounted in one of the housings **320** may be used through a signal cable mounted in the elastic band **310**. For example, in the case in which the wireless communication unit **385** is mounted in one of the housings **320**, a sound signal received by the wireless communication unit **385** may be transmitted to the earbuds **340** via the signal cable.

The wireless communication unit **385** may include an antenna pattern **386** mounted on the main board **381** or formed on the surfaces of the housings **320** for transmitting and receiving a signal to and from an external terminal. The wireless communication unit **385** is synchronized with an external terminal using a short-distance wireless communication system, such as BLUETOOTH™, in order to receive a control signal and a sound signal from the external terminal, or transmits a control signal and a sound signal input through the user input unit **370** or the microphone **360** of the portable sound device **300** to the external terminal.

The power button **371**, which is used to turn power on/off, the talk button **372**, which is used for play or conversation, and the direction key for the volume button **373**, which is used to control sound, may be included in the housings **320**. (The direction key may also be used to perform control to play the previous track or the next track.) A dome key that is physically pushed or a touch key that senses a change of capacitance may be used as each button.

The position of the touch key is not limited, and the surfaces of the housings **320** may be variously used. When the touch key is formed on the surfaces of the housings **320**, the position and function of the touch key may be displayed on the portions of the surfaces of the housings **320** at which the touch key is formed using LEDs.

The earbuds **340** are inserted into the ears of the user to transmit sound to the user. The earbuds **340** are connected to the main board **381** via the sound cable **345** shown in FIG. **6**. A sound output module (not shown) may perform a function of directly generating sound in the earbuds **340**. The sound output module may include a vibrating plate.

The main board **381** controls the earbuds **340** so as to output sound according to a sound signal.

FIG. **4** is an exploded perspective view of an elastic band **310** of a portable sound device **300** according to another embodiment of the present invention. The elastic band **310** includes a shape memory alloy **311**, covering units **312** and **313**, and connection units **315**.

The shape memory alloy **311** returns to a specific shape when deformed. When the elastic band **310** is deformed as the main body is widened by the user, the shape memory alloy **311** returns to the original shape thereof. Consequently, deformation of or damage to the portable sound device **300** is prevented.

The covering units **312** and **313** cover the shape memory alloy **311**. The covering units **312** and **313** may be made of thermoplastic polyurethane, the shape of which is variable. Thermoplastic polyurethane is melted by heat, and has the same elasticity as rubber, and is resistant to oil and wear after hardening.

The connection units **315** have fastening structures configured to be coupled to the housings **320**, which are located at opposite ends of the elastic band **310**. The connection units **315** extend leftward and rightward from the covering units **312** and **313** so as to overlap the housings **320**, and are coupled to the covering units **312** and **313** so as to be covered by the covering units **312** and **313**. That is, the covering units **312** and **313** are formed on the shape memory alloy **311** and the connection units **315** by double injection.

The second covering unit **312** covers the shape memory alloy **311** and the signal cable so as to accurately dispose the shape memory alloy **311** at the connection units **315** and to fix the signal cable, which transmits and receives a signal to or from the housings **320**. The opposite ends of the second covering unit **312** are coupled to the respective connection units **315**. Subsequently, the first covering unit **313**, which covers the connection units **315**, the second covering unit **312**, and the shape memory alloy **311**, is formed by double injection. As a result, the elastic band **310** is configured to be easily deformed when the user wears the portable sound device and to return to the original shape thereof.

FIG. **5** is a view showing coupling between the elastic band **310** and the housing **320** of the portable sound device **300** according to an embodiment of the present invention. The shape memory alloy **311** (see FIG. **4**) is exposed from the opposite ends of the second covering unit **312**. In order to increase fixing force, the opposite ends of the shape memory alloy **311** (see FIG. **4**) may be bent in the form of a hook so as to be connected to the connection units **315**. Each connection unit **315** is provided with a plurality of holes, through which each connection unit **315** is fastened to a corresponding one of the housings **320**.

At least a portion of each connection unit **315** may be surrounded by a corresponding one of the housings **320**. An upper case **321** and lower cases **322** and **324** may cover one surface and the other surface of at least a portion of each connection unit **315**, respectively. The upper case **321** is exposed outward. For this reason, the upper case **321** is formed of a single member that extends from the portions of the elastic band **310** that are coupled to the connection units **315** to the opposite ends of the main body. As shown in FIG. **5**, the lower cases **322** and **324** may include a first lower case **322**, which surrounds a corresponding one of the connection units **315**, and a second lower case **324**, in which components are mounted.

The upper case **321** or one of the lower cases **322** and **324** and a corresponding one of the connection units **315** are coupled to each other by screws **316**, which are fastened to the upper case **321** or one of the lower cases **322** and **324** through fastening holes formed in the connection unit **315**. The portion of the case from which the heads of the screws **316** are exposed may be covered by coupling between the case and the opposite case.

The length of each connection unit **315** may be set as needed. In order to secure space and to reduce the weight of the portable sound device **300**, each connection unit **315** may be formed so as to be short such that the minimum number of screws **316** is used. In this case, however, the fastening force between the elastic band **310** and the housings **320** is low. When force is repeatedly applied to the elastic band **310**, therefore, the elastic band may be damaged. Consequently, each connection unit **315** may be extended far enough to increase fastening force using the maximum number of screws **316**.

FIG. **6** is an exploded perspective view of the rotary module **350** of the portable sound device according to an embodiment of the present invention.

The rotary module **350** is rotatably mounted in each housing **320**. When the rotary module **350** is rotated, the

sound cable **345** is wound around the rotary module **350** such that the sound cable **345** is received in each housing **320** (see FIG. **3**). The earbuds **340** (see FIG. **3**) are fastened to the respective earbud holders (see FIG. **2**). The rotary module **350** includes a stationary unit **350***a*, which is fixed to the housing **320**, and a rotary unit **350***b* configured to be rotatable relative to the stationary unit **350***a*. The stationary unit **350***a* may further include brackets **3501** and **3502**, which define the external appearance of the rotary module **350**.

The stationary unit **350***a* includes a shaft **351**, which serves as the axis of rotation of the rotary module **350**, and the rotary unit **350***b* includes a cylindrical bobbin **353**, around which the sound cable **345** is wound. The bobbin **353** may include a concave part **3531**, which is recessed toward the center thereof to provide a space in which the sound cable **345** is wound.

A reel spring **355** is provided in the bobbin **353** to provide the force necessary to rotate the rotary module **350**. The reel spring **355** is a kind of leaf spring that is spirally wound. The inside end of the reel spring **355** is fixed to the shaft **351**, and the outside end of the reel spring **355** is coupled to the rotary unit **350***b*. When the user pulls the sound cable **345**, the bobbin **353** is rotated in a first direction (the counterclockwise direction in the drawing). As a result, the number of windings of the reel spring **355** is reduced, whereby the reel spring **355** has elastic restoring force. When the user releases the sound cable **345**, the reel spring **355** is rotated in a second direction (the clockwise direction in the drawing), which is opposite the first direction, due to the restoring force thereof. As a result, the sound cable **345** is wound around the bobbin **353**, whereby the sound cable **345** is received in the housing **320**.

Even when the rotary unit **350***b* is rotated, the sound cable **345** must be connected to the main board **381** mounted in the housing **320**. To this end, the stationary unit **350***a* includes a rotary module board **352**, which is connected to the main board **381**. The rotary module board **352** includes two electrodes **3521** and **3522** having different diameters. Connection terminals **354**, which are connected to the electrodes **3521** and **3522**, are located in the rotary unit **350***b*. The connection terminals **354** are connected to the sound cable **345**. Even when the rotary unit **250***b* is rotated, the connection terminals **354** remain connected to the electrodes **3521** and **3522**. An auxiliary board **3545** may be further included to prevent the connection terminals **354** from being separated from the electrodes **3521** and **3522** and to connect the connection terminals **354** to the sound cable **345** by soldering.

A stop module for controlling the rotation of the rotary unit **350***b* in the second direction due to the elasticity of the reel spring **355** may be further included. The stop module does not disturb the rotation of the rotary unit **350***b* in the first direction when the user pulls the sound cable **345**. Consequently, the sound cable is drawn out while the rotary unit **350***b* is smoothly rotated as the user pulls the sound cable **345**. When the user releases the sound cable **345** after drawing out the sound cable **345**, the stop module prevents the rotation of the rotary unit **350***b* in the second direction so as to fix the rotary unit **350***b* such that the sound cable **345** is not inserted into the housing **320** in the state of being drawn out.

When the sound cable **345** is pulled again and released, the fixed state of the rotary unit **350***b* is released, and the rotary unit **350***b* is rotated in the second direction due to the elasticity of the reel spring **355**. As a result, the sound cable **345** is inserted into the housing.

The stop module may control winding and unwinding of the sound cable **345** on and from the rotary unit **350***b* merely through a pulling operation by improving a conventional structure in which the rotation of the rotary unit **350***b* is fixed by a member such as a hook and the fixed state of the rotary unit **350***b* is released by a button.

The stop module includes a track module **357** having a track formed concavely in the shape of a groove and a stopper **3595** configured to move on the track when the track module **357** is rotated. The stopper **3595** may be formed in the shape of a ball or a pogo pin. As shown in FIG. **6**, the stopper **3595** may protrude from a stop plate **359**.

The stationary unit **350***a* is fixed to the housing **320**, whereby the stationary unit **350***a* is not movable, and the rotary unit **350***b* is rotated about the shaft **351**. However, the stopper **3595** moves rectilinearly in the diametric direction of the rotary unit **350***b*.

FIG. **7** shows the stop module. The stop module may include a track module **357** and a stop plate **359**, which includes a shaft slot **3591** and a stopper **3595** (shown in FIG. **6**). The track module **357**, which is a portion of the rotary unit **350***b*, moves with the bobbin **353**. The stop plate **359** moves rectilinearly when the rotary unit **350***b* is rotated.

The stop plate **359**, which is a plate-shaped member, is made of an injection-molded material or a plate-shaped metal material. FIG. **8** is a plan view and a side view showing the stop plate according to an embodiment of the present invention. The stop plate **359** is provided with a shaft slot **3591**, a stopper **3595**, and a guide boss **3597**. The shaft slot **3591** is an opening formed in the stop plate **359** so as to extend to one side thereof. The shaft **351** extends through the shaft slot **3591**.

The width of the shaft slot **3591** corresponds to the width of the shaft **351**, and the shaft slot **3591** extends to one side thereof so as to be longer than the diameter of the shaft **351**. The length of the shaft slot **3591** corresponds to a difference in the diameter between a first track **3571** and a second track **3572** of the track, a description of which will follow.

The stopper **3595** is a protrusion that protrudes from the stop plate **359** toward the track module **357**. The stopper **3595** may be formed so as to have a shape corresponding to the section of the track. The concave track surface of the track may have a shape corresponding to the shape of the stopper **3595**.

The guide boss **3597** protrudes in the direction opposite the direction in which the stopper **3595** protrudes. The guide boss **3597** is inserted into a guide slot **358** formed in the bracket **3501**. As shown in FIG. **6**, the guide slot **358** may be formed in the shape of a groove extending in the direction parallel to the direction in which the shaft slot **3591** extends.

If the guide boss **3597** and the guide slot **358** are not provided, the stop plate **359** does not move rectilinearly but is rotated with the rotary unit **350***b*. In order to solve this problem, the rotation of the stop plate **359** may be prevented and the rectilinear movement of the stop plate **359** toward the shaft slot **3591** may be assisted through the guide slot **358** formed in the bracket **3501**, which is a stationary unit.

As shown in FIG. **8**(*b*), the guide boss **3597** and the stopper **3595** may be formed symmetrically. In the case in which the guide boss **3597** and the stopper **3595** are formed symmetrically, one surface and the other surface of the stop plate **359** are not distinguished from each other. At the time of assembly, therefore, defects due to overturning of the stop plate **359** may be reduced, whereby assembly efficiency may be improved and thus the incidence of assembly defects may be reduced.

The track module **357** according to an embodiment of the present invention includes a track formed concavely in the shape of a groove. The stopper **3595** may move along the track. The stop plate **359** moves depending on the position of the stopper **3595** on the track module **357**. The shaft slot **3591** in the stop plate **359** is not rotated but moves rectilinearly. The track module **357** is located on the bobbin **353**, which is a component of the rotary unit **350***b*, so as to be rotatable with the rotary unit **350***b* when the rotary unit **350***b* is rotated. The stop plate **359** moves rectilinearly depending on the position of the stopper **3595** on the track when the track module **357** is rotated.

FIG. **9** is a plan view of the track module **357** of the portable sound device according to an embodiment of the present invention. In the track module **357** shown in FIG. **9**, rotation in the first direction, in which the sound cable is unwound, is referred to as "counterclockwise-direction rotation", and rotation in the second direction, in which the sound cable is wound on the bobbin **353**, is referred to as "clockwise-direction rotation". However, the first direction may be the clockwise direction and the second direction may be the counterclockwise direction depending on the shape of the track module **357** and the reel spring **355**. The following description will be given based on the shape of the track module **357** shown in the drawing for convenience of description.

The track module **357** includes two circular tracks **3571** and **3572**, at the center of each of which the shaft **351** is located, a connection track **3573** interconnecting the circular tracks **3571** and **3572**, and a stop track **3574**. The first track **3571** and the second track **3572** have different diameters. The first track **3571** is located inside the second track **3572**. The first track **3571** has an asymmetrical structure in which the distance of the first track **3571** from the shaft **351** is not uniform, but one side of the first track **3571** is located farther from the shaft **351**.

FIG. **14** is a view showing a conventional track **10**. A first track **11** has a concentric circle, at the center of which a shaft is located. The first track **11** includes a step portion **25** that is inclined throughout a track surface and protrudes in the clockwise direction at the part thereof at which a connection track **13** is located. The step portion **25** of the first track **11** serves as a guide for guiding the stopper to move from the first track **11** to the connection track **13** when the track module is rotated in the counterclockwise direction. When the track module is rotated in the first track **11** in the clockwise direction, the track module moves from the high position to the lower position of the step portion **25**, whereby the stopper may be continuously located in the first track **11**.

In contrast, the first track **3571** according to the present invention includes no inclined surface and no step portion, as shown in FIG. **9**. The step portion or the inclined surface may be omitted from the first track **3571** according to the present invention, since the distance of the first track **3571** from the shaft **351** is not uniform. FIG. **10** is a view illustrating the relationship between the track module **357** and the stop plate **359** when the sound cable **345** is pulled so as to be withdrawn from the housing **320**.

In the state in which the sound cable **345** is wound on the rotary module **350** (see FIG. **10**(*a*)), the stopper **3595** is located in the first track **3571**. When the user separates the earbud **340** from the earbud holder **325** and then pulls the earbud **340**, the track module **357** is rotated in the counterclockwise direction, whereby the sound cable **345** is unwound. When the sound cable **345** is pulled, the track module **357** is rotated in the counterclockwise direction in the state in which the stopper **3595** is located in the first track **3571**. The stopper **3595** passes through a second point B of the first track **3571**, which is the farthest from the shaft **351** (see FIG. **10**(*b*)), is located in the connection track **3573** (see FIG. **10**(*c*)), passes through the connection track **3573**, and is introduced into the second track **3572** (see FIG. **10**(*d*)).

The first distance x**1** from the shaft **351** to the first point A of the connection track **3573**, which is the closest to the shaft **351**, must be equal to or less than the second distance x**2** from the shaft **351** to the second point B of the connection track **3573** (x**1**≤x**2**). In order for the stopper **3595** to be introduced into the connection track **3573** without being caught at the first point A when the rotary unit is rotated in the counterclockwise direction, the second distance x**2** must be equal to or less than the first distance x**1**.

Since the position of the outer circumferential surface of the first track is uniform from the state shown in FIG. **10**(*b*) to the state shown in FIG. **10**(*c*), the stop plate **359** does not move rectilinearly, and the distance from the stopper **3595** to the shaft **351** is increased when the stopper **3595** is introduced into the second track **3572** along the connection track **3573**. Consequently, the stopper **3595** moves rectilinearly so as to become distant from the shaft **351**. The position of the shaft **351** in the shaft slot **3591** is biased in the direction opposite the direction in which the stopper **3595** is located (see FIG. **10**(*d*)).

When the user continuously pulls the sound cable **345**, the track module **357** is continuously rotated in the counterclockwise direction in the state in which the stopper **3595** is located in the second track **3572**, as shown in FIG. **10**(*d*). The second track **3572** is provided at the part thereof that is connected to the stop track **3574** with a first step portion **3575***a*, the height of which is increased in the counterclockwise direction. The second track **3572** includes a first inclined surface **3575***b* for compensating for the height of the first step portion **3575***a*. The first inclined surface **3575***b* may be located between the connection track **3573** and the stop track **3574** so as not to affect a second step portion **3576***a*, which is located between the connection track **3573** and the second track **3572**.

When the rotary unit **350***b* is rotated in the counterclockwise direction, the rotary unit **350***b* may be rotated in the state in which the stopper **3595** is located in the second track **3572**. When the rotary unit **350***b* is rotated in the clockwise direction, however, the stopper **3595** is caught by the first step portion **3575***a*, which is higher in the counterclockwise direction, whereby the stopper **3595** moves to the stop track **3574**.

FIG. **11** shows the case in which the user releases the sound cable **345** while pulling the sound cable **345** (*a*), the case in which the rotation of the rotary module **350** is restricted (b), the case in which the user pulls the sound cable **345** again (c), and the case in which the fixed state of the rotary unit **350***b* is released (d). The stop track **3574** may include a first stop track **3574***a* connected to the second track **3572**, the first stop track **3574***a* being bent in the shape of a V, a second stop track **3574***c* connected to the first stop track **3574***a*, and a fixing portion **3574***b*, at which the first stop track **3574***a* and the second stop track **3574***c* are connected to each other, the fixing portion **3574***b* being bent. FIG. **12** is an enlarged view of the stop track **3574**. As shown in FIG. **12**, the width of the stop track **3574** may not be uniform, but may vary.

In the case in which the user releases the sound cable **345** while pulling the sound cable **345** (see FIG. **11**(*a*)), the stopper **3595** reaches the first step portion **3575***a*. At this time, the stopper **3595** moves along the first stop track

3574*a*. When the stopper **3595** reaches the fixing portion **3574***b*, the rotation of the track module **357** is stopped (see FIG. **11**(*b*)).

When the user pulls the sound cable **345** again, the track module **357** is rotated in the counterclockwise direction, and the stopper **3595** escapes from the fixing portion **3574***b* of the stop track **3574** and moves to the first track **3571** along the second stop track **3574***c* (see FIGS. **11**(*c*) and **11**(*d*)).

Only in the case in which the distance x**4** from the shaft **351** to the starting point of the second stop track **3574***c* is equal to or greater than the distance x**3** from the shaft **351** to the fixing portion **3574***b*, as shown in FIG. **12**(*a*), the stopper **3595** moves to the first track **3571** from the fixing portion along the second stop track **3574***c* (x**3**≤x**4**).

Referring to FIG. **14**, a conventional stop track **14** also includes a step portion **23**. In the present invention, however, the distances from the shaft **351** to the fixing portion of the stop track **3574** and to the starting point of the second stop track **3574***c* are set so as to have the above-described relationship such that the stopper **3595** is guided so as not to move to the first stop track **3574***a* but to move to the second stop track **3574***c* from the fixing portion.

When the user continuously pulls the sound cable **345**, as shown in FIG. **10**, the stopper **3595** is introduced again into the second track **3572** through the connection track **3573**, and the track is rotated in the counterclockwise direction in the state in which the stopper **3595** is located in the second track.

When the user slightly pulls the sound cable **345** and then releases the sound cable **345**, as shown in FIG. **13**, the track is rotated in the clockwise direction by the reel spring **355** in the state in which the stopper **3595** is located in the first track **3571** (see FIGS. **11**(*a*), **11**(*b*), and **11**(*c*)). When the sound cable **345** is completely wound, the stopper **3595** is maintained in the state of being located in the first track **3571**, as shown in FIG. **13**(*d*).

In the conventional track **10**, a step **24** is formed between the first track **11** and the stop track **14** in order to guide the stopper **3595** such that the stopper **3595** does not move from the first track **11** to the stop track **14** when the track **10** is rotated in the clockwise direction.

In contrast, according to the present invention, no step is formed between the first track **3571** and the stop track **3574**, and the movement of the stopper **3595** from the first track to the stop track may be prevented based on the distance from the shaft **351** to the connection point of the stop track **3574** and the first track **3571**. Referring to FIG. **12**(*b*), the distance x**5** from the shaft **351** to the front point C of the connection of the stop track **3574** and the first track **3571** in the counterclockwise direction may be set so as to be equal to or less than the distance x**6** from the shaft **351** to the rear point D of the connection of the stop track **3574** and the first track **3571**. When the track module **357** is rotated in the clockwise direction, the stopper **3595** may be rotated in the state of being continuously located in the first track **3571** without being caught at the rear point D or being introduced into the stop track **3574** from the front point C (x**5**≤x**6**).

As is apparent from the above description, the portable sound device according to the present invention has the following effects.

The number of members constituting the rotary module is reduced, whereby the thickness of the rotary module is reduced and thus the limited space is efficiently used.

In addition, the size of the step on the track surface is minimized, whereby soft rotation of the rotary module is achieved when the sound cable is inserted or withdrawn, and thus the usability of the portable sound device is improved.

Further scope of applicability of the present invention will become apparent from the detailed description given above. However, it should be understood that the detailed description and specific examples, while indicating preferred embodiments of the invention, are given by illustration only, since various changes and modifications within the spirit and scope of the invention will become apparent to those skilled in the art from this detailed description.

The above detailed description is not to be construed as limiting the present invention in any aspect, and is to be considered by way of example. The scope of the present invention should be determined by reasonable interpretation of the accompanying claims, and all equivalent modifications made without departing from the present invention should be included in the following claims.

What is claimed is:

1. A portable sound device comprising:

a main body having an audio output unit holder;

an audio output unit detachably mountable in the audio output unit holder and configured to output audio;

an audio cable configured to transmit an audio signal to the audio output unit, one end of the audio cable located outside the main body when the audio cable is connected to the audio output unit, and the other end of the audio cable located inside the main body; and

a rotary module rotatably mounted in the main body and configured to wind or unwind the audio cable according to a rotational direction of the rotary module,

wherein the rotary module comprises:

a stationary unit fixed to the main body, the stationary unit comprising a shaft;

a rotary unit configured to be rotatable about the shaft, the rotary unit comprising a track formed in a concave shape; and

a stopper inserted into the track such that a position of the stopper varies in the track when the rotary unit is rotated, and

wherein the track comprises:

a first track formed around the shaft, wherein a distance between one side of the first track and the shaft is different from a distance between another side of the first track and the shaft;

a second track located outside the first track;

a connection track interconnecting the first track and the second track; and

a stop track located between the first track and the second track and bent in a shape of V.

2. The portable sound device according to claim **1**, wherein a first distance from the shaft to a first point of the connection track, which is closest to the shaft, is equal to or shorter than a second distance from the shaft to a second point of the first track, which is farthest from the shaft.

3. The portable sound device according to claim **1**, wherein:

the audio cable is wound when the rotary unit is rotated in a first direction;

the first track comprises no inclined surface and no step portion; and

the second track comprises a first inclined surface, at which a height of a track surface of the second track gradually increases in the first direction, and a first step portion formed at a part of the second track at which the stop track is located, a height of the first step portion gradually decreasing in the first direction.

4. The portable sound device according to claim **3**, wherein the first inclined surface is located between the connection track and the stop track.

5. The portable sound device according to claim 1, wherein the connection track comprises a second inclined surface, at which a height of a track surface of the connection track gradually increases from the first track to the second track, and a second step portion located between the connection track and the second track, the connection track being higher than the second track at the second step portion.

6. The portable sound device according to claim 1, wherein a height of a track surface of the stop track is uniform.

7. The portable sound device according to claim 1, wherein a third distance from the shaft to an outer track side of a V-shaped bent portion of the stop track is less than a fourth distance from the shaft to an inner track side of the V-shaped bent portion of the stop track.

8. The portable sound device according to claim 1, further comprising:

a stop plate located at an upper surface of the track, the stop plate comprising a shaft slot, through which the shaft extends, and the stopper protruding toward the track,

wherein:

a width of the shaft slot corresponds to a width of the shaft; and

a length of the shaft slot is equal to or greater than a difference in a distance between a point of the first track that is the closest to the shaft and a point of the second track that is the farthest from the shaft.

9. The portable sound device according to claim 8, wherein the rotary module further comprises:

a bracket fixed to the main body and configured to cover the stop plate, the bracket defining an external appearance of the rotary module;

a guide slot formed in the bracket, the guide slot extending in a direction parallel to a longitudinal direction of the shaft slot; and

a guide boss formed at the stop plate and configured to be inserted into the guide slot.

10. The portable sound device according to claim 9, wherein the guide boss and the stopper are formed symmetrically in a thickness direction of the stop plate.

11. The portable sound device according to claim 8, wherein the stop plate moves rectilinearly in a direction in which the shaft slot is formed when the rotary unit is rotated.

12. The portable sound device according to claim 1, wherein the rotary unit further comprises:

a bobbin configured to be rotatable about the shaft such that the audio cable is wound on an outer circumferential surface of the bobbin; and

a reel spring configured to provide rotary force to the bobbin, the reel spring having one end coupled to the bobbin and the other end fixed to the shaft.

13. The portable sound device according to claim 1, wherein the audio output unit comprises an in-ear audio device.

14. The portable sound device according to claim 13, wherein the in-ear audio device comprises an earbud.

15. A portable sound device comprising:

a main body having an audio output unit holder;

an audio output unit detachably mountable in the audio output unit holder and configured to output audio;

an audio cable coupled to the audio output unit and configured to transmit an audio signal to the audio output unit, one end of the audio cable located outside the main body and the other end of the audio cable located inside the main body; and

a rotary module rotatably mounted in the main body and configured to wind or unwind the audio cable according to a rotational direction of the rotary module,

wherein the rotary module comprises:

a stationary unit fixed to the main body, the stationary unit comprising a shaft;

a rotary unit configured to be rotatable about the shaft, the rotary unit comprising a track;

a stopper inserted into the track such that a position of the stopper varies in the track when the rotary unit is rotated; and

a stop plate located at an upper surface of the track, the stop plate comprising a shaft slot, through which the shaft extends, and the stopper protruding toward the track,

wherein the track comprises:

a first track formed around the shaft such that a distance of the first track from the shaft is inconsistent;

a second track located outside the first track;

a connection track interconnecting the first track and the second track; and

a stop track located between the first track and the second track, and

wherein:

a width of the shaft slot corresponds to a width of the shaft; and

a length of the shaft slot is equal to or greater than a difference in a distance between a point of the first track that is the closest to the shaft and a point of the second track that is the farthest from the shaft.

16. The portable sound device according to claim 15, wherein the stop track is curved or in a bent shape.

17. The portable sound device according to claim 15, wherein the stop track is bent in a shape of V.

* * * * *