(19) China National Intellectual Property Administration

(12) Utility Model Patient

(10) Publication No.: CN 202931524 U

(45) Publication Date: May 8, 2013

(21) Application No.: 201220220984.0

(22) Application Date: May 16, 2012

(30) Priority Data

2011-114402 2011.05.23 JP

(73) Patent Holder: JVC Kenwood Corporation

Address: Kanagawa Prefecture, Japan

(72) Inventors: Hiromitsu Asaka, Takayuki Miyazawa

(74) Patent agency: China Sinda Intellectual Property Agency Co., Ltd. 11219

Agents: Wang Ning, Lu Jinhua

(51) Int. Cl.

H04R 1/10(2006.01)

H04R 31/00(2006.01)

Claims: 1 page; Description: 9 pages; Drawings: 12 pages

(54) Name of utility model:

Ear hook and earphone

(57) Abstract

This utility model provides an ear hook that is not prone to malfunctions caused by sweat, water droplets, or uneven resin thickness, and has an attractive appearance and simple manufacturing process. The utility model ear hook comprises a hook main body portion (2) bent into a shape that can be worn on the base of the external pinna, and a wire (5) embedded inside the hook main body portion (2) and extending outward from one end of the hook main body portion (2). The hook main body portion (2) includes a core wire material (6) of a specified length set along the wire (5), a holding portion (12) through which the wire (5) and the core wire material (6) pass, and a resin portion (8), wherein the resin portion (8) covers at least the entire core wire material (6), the portion through which the core wire material (6) passes in the wire (5) and the holding portion (12), wherein a hole (2h) with a depth reaching the holding portion (12) is provided on the surface of the resin portion (8).

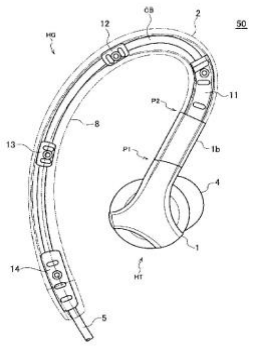

CN 202931524 U

1. An ear hook comprising: a hook main body portion bent into a shape that can be worn on the base of the external pinna, a wire embedded inside the hook main body portion and extending outward from one end of the hook main body portion, characterized in that,

The hook main body portion comprises:

A core wire material of a specified length set along the wire,

A holding portion through which the wire and the core wire material pass, and

A resin portion that covers at least the entire core wire material, the portion through which the core wire material passes in the wire and the holding portion,

and a hole with a depth reaching the holding portion provided on the surface of the resin portion.

2. An earphone comprising:

An ear hook as claimed in claim 1;

A main body that accommodates a speaker connected to one end of the wire and is integrated with the ear hook.

3. The earphone as claimed in claim 2, characterized in that, in the use state where the ear hook is worn on the ear, the core wire material is located on one side of the external pinna compared to the wire.

Ear hook and earphone

Field of the invention

[0001] The present utility model relates to an ear hook, an earphone, and a manufacturing method of the earphone, particularly to an ear hook with wires embedded and passing through internally, an earphone using the ear hook, and a manufacturing method of the earphone.

Background of the invention

[0002] Ear hanging earphones are widely known. Due to its sturdy fit, this type of earphone is suitable for use during exercise, and therefore the market has been continually expanding in recent years. The earphone described in Patent Document 1 is one example.

[0003] The earphone in Patent Document 1 is called headphone. In it, there is a wires inside the ear hook that provides sound signals to the earphone speaker.

[0004] In addition, in Patent Document 1, the wire is referred to as a flexible wire. According to Patent Document 1, the front end of the wire can be freely inserted into or removed from the slot, so the ear hook can be separated from the main body with the speaker.

[0005] In addition, an internal structure of an ear hook is also disclosed. In order to change the shape of the ear hook according to the shape of the ear and maintain it, a freely bendable core wire material such as metal wire is used, wherein the wire is wrapped around the core wire material and covered with resin.

[0006] The reason for using metal wire as the core wire material of the ear hook is that it can better fit the shape of the ear hook, making it more ideal.

[0007] Patent document

[0008] Patent Document 1: Japanese Patent Application Publication No. 1-169896

Contents of the utility model

[0009] In the manufacturing process of the earphone described in Patent Document 1, the so-called inlay molding method is used in the injection molding of the resin cover layer of the ear hook. That is, the integrated wire formed by integrating the core wire material and the conductor is stored in the mold cavity, and then resin is injected into the surrounding space to form it.

[0010] In inlay molding, it is necessary to stably fix the integrated wire at the designated position inside the mold cavity.

[0011] The commonly used method in inlay molding is to protrude an ejector pin on the mold to directly support the insert. If this method is used for the inlay molding of the integrated wire, a deep hole corresponding to the ejector pin will be formed, which extends from the outer surface of the molded product to the inside of the integrated wire.

[0012] In order to more stably fix the integrated wire, it is necessary to set ejector pins at multiple locations along the length direction of the integrated wire.

[0013] Therefore, multiple such deep holes will be formed along the length direction of the ear hook, which will affect the aesthetic appearance of the ear hook. Moreover, when using the earphone while moving, it becomes a pathway for sweat or raindrops to enter the earphone and come into contact with the integrated wire, which may cause adverse conditions such as corrosion of the metal parts inside the ear hook.

[0014] In addition, when the outer diameter of the wire and the core wire material are different, it will be difficult to determine the contact position of the ejector pin, and due to the difficulty in achieving face-to-face contact, the fixation will become unstable.

[0015] Therefore, due to the influence of pressure applied to the resin during inlay molding, the integrated wire inside the formed ear hook cannot be accurately and stably placed in the specified position, and there may be significant displacement during molding.

[0016] When the position of the integrated wire inside the ear hook deviates, the resin layer covering it will become uneven in thickness.

Therefore, after repeated deformation of the ear hook, the thinner portion may experience adverse conditions such as cracking.
[0017] In this way, it can be expected that faults related to the position of the integrated wire will occur on the ear hook composed of wire, core wire material, and resin covering them, as well as earphone using the ear hook, which are also very difficult to manufacture.
[0018] Therefore, the issue to be solved by the present utility model is to provide an ear hook, earphone, and a manufacturing method for the earphone, which, even if formed by wire, core wire material, and resin covering them, will not easily cause faults due to sweat or water droplets and uneven thickness of the resin, and has a beautiful appearance and simple manufacturing process.
[0019] The present utility model will use the following structure and process as the means to solve the above-mentioned issues.
[0020] 1) An ear hook (2A) comprising: a hook main body portion (2) bent into a shape that can be worn on the base of the external pinna, and a wire (5) embedded inside the hook main body portion (2) and extending outward from one end of the hook main body portion (2), characterized in that,
[0021] The hook main body portion (2) comprises:
[0022] A core wire material (6) of a specified length set along the wire (5),
[0023] A holding portion (12) through which the wire (5) and the core wire material (6) pass, and
[0024] A resin portion (8) covering at least the entire core wire material (6), the range along which the core wire material (6) runs in the wire (5), and the holding portion (12),
[0025] The surface of the resin portion (8) is provided with a hole (2h) with a depth reaching the holding portion (12).
[0026] 2) An earphone (50), characterized by comprising: an ear hook (2A) as described in 1); a main body (HT) that accommodates a speaker (SP) connected to one end of the wire (5) and is integrated with the ear hook (HG).
[0027] 3) An earphone (50) as described in 2), characterized in that, when the ear hook (HG) is worn on the ear, the core wire material (6) is located on one side of the external pinna compared to the wire (5).
[0028] The effect obtained according to the present utility model is that it will not easily cause faults caused by sweat and water droplets as well as faults caused by uneven resin thickness, and will have a beautiful appearance and simple manufacturing process.

Description of figures
[0029] Figure 1 is an external view used to illustrate an embodiment of an earphone equipped with an ear hook of the present utility model.
[0030] Figure 2 is a cross-sectional view used to illustrate an embodiment of the ear hook of the present utility model.
[0031] Figure 3 is a partial plan view used to illustrate an embodiment of the ear hook of the present utility model.
[0032] Figure 4 is a partial perspective view used to illustrate an embodiment of an earphone equipped with the ear hook of the present utility model.
[0033] Figure 5 is a plan view illustrating the internal structure of an embodiment of an earphone equipped with the ear hook of the present utility model.
[0034] Figure 6 is a diagram used to illustrate the main parts of the embodiment of the ear hook of the present utility model.
[0035] Figure 7 is a sectional view illustrating one stage of the manufacturing method in the embodiment of the ear hook of the present utility model.
[0036] Figure 8 is a diagram used to illustrate the other main parts of the embodiment of the ear hook of the present utility model.
[0037] Figure 9 is a diagram used to illustrate another main part of the embodiment of the ear hook of the present utility model.
[0038] Figure 10 is a plan view used to illustrate the intermediate product in the embodiment of the earphone equipped with the ear hook of the present utility model.
[0039] Figure 11 is a cross-sectional view used to illustrate another stage of the manufacturing method in the embodiment of the ear hook of the present utility model.
[0040] Figure 12 is another cross-sectional view used to illustrate another stage of the manufacturing method in the embodiment of the ear hook of the present utility model.
[0041] Figure 13 is a plan view used to illustrate an embodiment of the ear hook of the present utility model.

[0042] Legends in the figures: 1: Housing; 1a: Sound tube portion; 2: Hook portion (hook main body portion); 2A: Ear hook; 2h: Hole; 2k: Claw; 2t1, 2t2: End; 4: Earplug; 5: Wire; 5a, 5b: Core wire material; 5c: Outer coating; 5n: Connector; 5p: Plug; 6: Wire material (core wire material); 6t1, 6t2: End; 7: Coverage portion; 8: Resin portion; 11-14: Holding portion; 11a, 12a, 14a: Through holes; 11a1, 12a1, 14a1: One end; 11a2, 12a2, 14a2: Other end; 11b, 12b, 14b: Convex seat portion; 11c, 12c, 14c: Concave seat portion; 11d, 11e, 12d, 12e, 14d, 14e: Groove portion; 11k1, 14k1: Exit on one side; 11k2, 14k2: Exit on the other side; 50. Earphone; HT: Main body portion; HG): Ear hook; CB: Integrated wire; ER: External pinna; HD: Head; HCB: Wire with holding portion; L1-L4: Distance; M, MM: Mold; M1, MM1: Fixed mold, M2, MM2: Movable mold; MM1a: Docking ejector pin; MM2a: Clamping ejector pin; P1: Boundary position; P2: Position; RC1-RC3: Curvature center; Rs1: Curvature radius; SP: Speaker; V, VV: Mold cavity.

Specific embodiments

[0043] The specific implementation of the present utility model will be explained with the preferred embodiments in figures 1 to 13.

[0044] Figure 1 is an external perspective view of an embodiment of an earphone equipped with the ear hook of the present utility model.

[0045] The earphone shown in figure 1 is worn on the right ear. The shape of the earphone worn on the left ear is symmetrical with respect to the center plane of the head when worn on the right ear. Therefore, the earphone worn on the right ear will be used as a representative for explanation.

[0046] The earphone 50 in the embodiment comprises a main body portion HT, an ear hook portion HG connected to the main body portion HT as a whole, that is, a hook main body portion, and a wire 5 extending from the ear hook portion HG.

[0047] The main body portion HT comprises a housing 1, wherein the housing 1 is composed of a speaker SP accommodated inside, and a sound tube portion 1a that outputs the sound of the speaker SP to the outside.

[0048] The ear hook portion HG is composed of a hook portion 2, wherein one end of the hook portion 2 is connected to the outer housing 1 as a whole at the boundary position P1, and is bent along the shape of the base of the external pinna. That is, the hook portion 2 has a curved shape that allows it to be worn on the base of the external pinna.

[0049] The wire 5 is buried and passes through the hook portion 2, with one end being introduced into the interior of the housing 1 and the other end extending outward from the hook portion 2.

[0050] Specifically, one end is introduced into the interior of the housing 1 from the hook portion 2 and connected to the speaker SP; and the other end is connected to the plug, which is not shown in figure 1.

[0051] When the plug of earphone 50 is connected to a music playback device or other machine, sound can be played from the speaker SP.

[0052] The sound tube portion 1a is equipped with freely detachable earplug 4 made of rubber material or the like.

[0053] The earphone 50 is used for the right ear. When wearing and using it, the earplug 4 is inserted into the external auditory canal, and the hook portion 2 is hung at the base of the external pinna of the right ear, so that the wire 5 is led out laterally towards the neck behind the external pinna.

[0054] There are multiple holes 2h on the surface of the hook portion 2, with 4 of them shown in figure 1.

[0055] RC1 in figure 1 represents the position of the curvature center RC1 of the hook portion 2, and Rs1 represents the curvature radius.

[0056] Figure 2 is a cross-sectional view of the hook portion 2 in S1-S1 section of figure 1. The cross-sectional position is approximately in the middle of two adjacent holes 2h.

[0057] The directions shown in figure 2 are the directions when the ear hook HG is worn between the head and the external pinna, namely the upper side, lower side, head side, and external pinna side.

[0058] The hook portion 2 in figure 2 is composed of the following portions: wire 5, the core wire material of hook portion 2, namely wire material 6, a covering portion 7 that integrates wire 5 and wire material 6, and a resin portion 8 that wraps around the covering portion 7.

[0059] In the following text, the covering portion 7 and the wire 5 and wire material 6 covered by the covering portion 7 are collectively referred to as integrated wires CB.

[0060] The wire 5 is a two-core wire material composed of a core wire material 5a, a core wire material 5b, and an outer coating 5c covering them, with an outer diameter of, for example, 1.4 mm.
[0061] The core wire materials 5a and 5b can be enameled wires, and the material of the outer coating 5c can be, for example, polyvinyl chloride PVC.
[0062] The material of wire material 6 can be, for example, stainless steel SUS, with an outer diameter of 0.8 mm.
[0063] The characteristic of wire material 6 is that it can be changed to the desired shape with fingers and maintain the deformed shape.
[0064] Wire 5 and wire material 6 are combined together and covered by the covering portion 7. It is best for wire 5 and wire material 6 to be tightly adhered together.
[0065] The covering portion 7 is a universal heat shrink tubing.
[0066] The resin portion 8 is a resin layer with a specified thickness, used to wrap the covering portion 7, and the material can be, for example, thermoplastic elastomer.
[0067] As shown in figure 2, in the cross-sectional shape of the integrated wire CB, the orientation of wire 5 and wire material 6 is such that wire 5 with a larger diameter is located on the head side, and wire material 6 with a smaller diameter is located on the external pinna side. In other words, if wire material 6 is placed on one side of the external pinna, the direction of wire 5 and wire material 6 intersect perpendicular to the direction of curvature center RC1.
[0068] At any section of the hook portion 2, the direction of the integrated wire CB's cross-sectional shape is maintained.
[0069] The wire material 6 with a smaller diameter is placed on the external pinna side of the wire 5 with a relatively larger diameter. In this way, the cross-sectional shape of the hook portion 2 can also be set to be thinner on one side of the external pinna, to improve the appearance design.
[0070] In figure 2, the core wire materials 5a and 5b in wire 5 are arranged side by side in the left-right direction, i.e., from the head to the external pinna. But this arrangement is not limited to the left and right direction, and the vertical and diagonal direction is also acceptable. The outer coating 5c of wire 5 is basically circular in shape, regardless of the arrangement direction.
[0071] The cross-sectional shape of the resin portion 8 is asymmetric, and a flat surface 8a is provided on the right side of figure 2, which is the external pinna side when worn on the ear. The cross-sectional shape of the resin portion 8 is designed to make the ear hook HG more aesthetically pleasing when worn on the ear.
[0072] Figure 3 is used to illustrate the two ends of the integrated wire CB.
[0073] Figure 3 is a schematic diagram of the portion near the front end of the hook portion 2 and the portion connected to the housing 1 in the integrated wire CB.
[0074] The covering portion 7 has an end portion 6t1 that completely covers the wire material 6 and a portion AR1 that only covers the wire 5.
[0075] In the front end of wire 5, the side that is led out from the hook portion 2 is connected to the plug, and the core wire materials 5a and 5b on the side that is introduced into the interior of the housing 1 are further led out and connected to the speaker SP.
[0076] The integrated wire CB can be made, for example, using the following methods.
[0077] [Procedure 1] The wire material 6 is cut to a specified length.
[0078] [Procedure 2] The wire 5 and wire material 6 of a specified length are inserted into the heat shrink tubing serving as the covering portion 7.
[0079] It is better to plastically deform the wire material 6 into a specified shape in advance. Specifically, a predetermined bending deformation is applied in advance to make it be approximately the shape of the base of the external pinna where the hook portion 2 is worn.
[0080] After applying bending deformation to wire material 6, wire 5 and wire material 6 are arranged side by side with almost the same curvature.
[0081] [Procedure 3] The heat shrink tubing is cut to a specified length. Specifically, the length of the heat shrink tubing is set to fully cover the ends 6t1 and 6t2 of wire material 6. The cutting can also be carried out before procedure 2.
[0082] The wire material 6 is placed inside the cut heat shrink tubing and it is ensured that the ends 6t1 and 6t2 of wire material 6 can be completely covered after the tubing shrinks.

[0083] [Procedure 4] The heat shrink tubing is heated to integrate wire 5 and wire material 6 in a tightly adhered state. In this way, an integrated wire CB can be produced.
[0084] Figure 4 is a perspective schematic diagram of the resin portion 8 of the hook portion 2 of the earphone 50 with almost the same orientation as in figure 1.
[0085] Figure 5 is a schematic diagram of the earphone 50 with the same orientation as in figure 4 after removing the resin portion 8.
[0086] As shown in figures 4 and 5, there are 4 holding portions along the extension direction of the integrated wire CB inside the hook portion 2, namely holding portion 11 to holding portion 14, which are spaced apart from each other by a certain distance. In this embodiment, the holding portion 12 and the holding portion 13 are set as the same component.
[0087] The material of each holding portion 11-14 can be polyethylene PE.
[0088] The ear hook HG is made with the following steps. Firstly, using molds corresponding to the shapes of each holding portion, the holding portions 11-14 are integrated and set on the integrated wire CB using inlay molding; Secondly, using a mold corresponding to the shape of the hook portion 2, the resin portion 8 is set on the integrated wire CB with the holding portions 11-14 using inlay molding.
[0089] Next, a detailed introduction to each holding portion will be provided.
[0090] (Regarding the holding portion 12)
[0091] Since the holding portion 13 and the holding portion 12 are the same component, taking the holding portion 12 as an example, a detailed explanation will be made using figures 6 (a) to (c).
[0092] Figure 6 (a) is a perspective view of the holding portion 12 in figure 5, as seen approximately from the direction of arrow YS5.
[0093] Figure 6 (b) is a plan view of the holding portion 12 in figure 5, as seen approximately from the front of the paper.
[0094] Figure 6 (c) is a perspective view of the holding portion 12 in figure 5 as seen from the direction of arrow YS6.
[0095] The holding portion 12 is formed as an integrated structure with the integrated wire CB, rather than an independent component as shown in figures 6 (a) to (c). For the ease of understanding, it will be explained as an independent component without the integrated wire CB.
[0096] The holding portion 12 presents a tubular shape with a through hole 12a, wherein the through hole 12a corresponds to the shape of the integrated wire CB. The cross-sectional shape of the shape presents a slightly elliptical shape with a length, and the arc at one end 12a1 in the length direction is slightly smaller than the arc at the other end 12a2, forming the shape of a water droplet, i.e., the shape of a fluid drop that drops down.
[0097] The cross-sectional shape presented by the through hole 12a is approximately similar to the outer shape of the holding portion 12. That is, the cross-sectional shape of the through hole 12a is a slightly elliptical shape with a length, and the arc of one end 12a1 in the length direction is slightly smaller than the arc of the other end 12a2, forming the shape of a water droplet.
[0098] In the length direction of the outer peripheral surface of one end 12a1 of the holding portion 12, that is, in the middle of the vertical direction in figure 6 (a), there is a protruding convex seat portion 12b, wherein the convex seat portion 12b intersects perpendicularly with the tube axis direction of the through hole 12a. The convex seat portion 12b can be designed, for example, to have a slightly cylindrical shape.
[0099] On the opposite side of the outer surface from the convex seat portion 12b, there is a concave seat portion 12c. The concave seat portion 12c intersects perpendicularly with the direction of the tube axis. The concave space of the concave seat portion 12b can be, for example, designed to have a slightly cylindrical shape.
[0100] One end 12a1 of the outer peripheral surface is provided with a pair of groove portions 12d, which sandwich the convex seat portion 12b. On the other end 12a2, there are a pair of groove portions 12e, which sandwich the concave seat portion 12c.
[0101] The groove portions 12d and 12e are formed as grooves extending in a direction perpendicular to the axis direction of the through hole 12a.
[0102] Next, using figure 7, the inlay molding of the holding portion 12 in the integrated wire CB holding portion will be explained.
[0103] Figure 7 is a schematic cross-sectional view of the mold M used to form the holding portion 12, with the integrated wire CB set inside the cavity V, and the fixed mold M1 and the movable mold M2 matched at the parting line PL.
[0104] The cross-sectional position of the holding portion 12 is the S2-S2 position in figure 6 (b), which is also the position suspended on the convex seat portion 12b and the concave seat portion 12c.

[0105] The space of cavity V corresponds to the space of the holding portion 12.
[0106] Before filling the resin, the integrated wire CB is set inside the cavity V, so that it is spaced at a specified distance from the inner wall of the cavity V.
[0107] Then, the cavity V is filled with melted resin material and cured, forming the holding portion 12 that is connected to the integrated wire CB as a whole.
[0108] On the fixed mold M1, there is a concave portion M1a corresponding to the convex seat portion 12b, and on the movable mold M2, there is a convex portion M2a corresponding to the concave seat portion 12c.
[0109] By setting a holding portion (not shown in the figure) outside the cavity V of mold M, the integrated wire CB can be tightly and firmly fixed.
[0110] During the inlay molding process, the integrated wire CB is in a free state inside the cavity V. However, the extension length of the integrated wire CB of the cavity V, which is equivalent to the axial length of the holding portion 12, is about 2 to 3 times the width of the integrated wire CB. Because it is short enough, the position of the integrated wire CB inside the cavity V is precise and stable, and it will not deviate even when subjected to pressure from resin or other materials during injection molding.
[0111] (Regarding the holding portion 14)
[0112] Figure 8 (a) is a perspective view of the holding portion 14 in figure 5, as seen approximately from the direction of arrow YS7 in figure 5.
[0113] Figure 8 (b) is a view approximately, as seen from the direction of arrow YS9 in figure 8 (a).
[0114] Figure 8 (c) is a plan view of the holding portion 14 in figure 5, as seen approximately from the front of the paper.
[0115] Figure 8 (d) is a perspective view of the holding portion 14 in figure 5, as seen approximately from the direction of arrow YS8 in figure 5.
[0116] The holding portion 14, like the holding portion 12, is integrated with the integrated wire CB, rather than being an independent component as shown in figures 8 (a) to (d). For the ease of understanding, the state after removing the integrated wire CB is explained here.
[0117] The holding portion 14 is tubular in shape and has a through hole 14a on it. The cross-sectional shape of the appearance is approximately circular.
[0118] On one side of the outlet 14k1 of the holding portion 14, the cross-sectional shape of the through hole 14a is slightly elliptical with a length, and the arc on one end 14a1 in its length direction is slightly smaller than the arc on the other end 14a2, forming a slightly downward water droplet shape.
[0119] In addition, on the side of the other outlet 14k2 located at the holding portion 14, the cross-sectional shape of the through hole 14a is approximately circular.
[0120] That is, the shape of the through hole 14a is designed to correspond to the end portion of the integrated wire CB shown in figure 3.
[0121] Specifically, the holding portion 14 and the integrated wire CB are connected as a whole, so that the position of the outlet 14k1 on one side of the holding portion 14 in figure 8 (a) is at the position of P14a in figure 3, and the position of the outlet 14k2 on the other side is at the position of P14b in figure 3.
[0122] In this way, the cross-sectional shape on one side of the outlet 14k1 of the through hole 14a will be slightly water droplet shaped, while the cross-sectional shape on the other side of the outlet 14k2 will be nearly circular.
[0123] A circular convex seat portion 14b is provided near the middle of the left and right direction in the longitudinal direction of the outer peripheral surface of one end 14a1 of the holding portion 14, as shown in figure 8 (a). The convex seat portion 14b protrudes in a direction perpendicular to the tube axis direction of the through hole 14a.
[0124] On the opposite side of the convex seat portion 14b on the outer peripheral surface, there is a circular concave seat portion 14c. The concave seat portion 14c is recessed in a direction perpendicular to the direction of the tube axis.
[0125] On the outer peripheral surface of the holding portion 14, there are a set of groove portions 14d1, 14d2, and 14d3, wherein the groove portions 14d1 and 14d2 sandwich the convex seat portion 14b in the middle; On its opposite side, there are a set of groove portions 14e1, 14e2, and 14e3,

wherein the groove portions 14e1 and 14e2 sandwich the concave seat portion 14c in the middle.
[0126] Each groove portion 14d1 to 14d3, and 14e1 to 14e3 is located in a direction perpendicular to the axis of the through hole 14a.
[0127] (Regarding the holding portion 11)
[0128] Figure 9 (a) is a plan view of the holding portion 11 in figure 5 as seen from the back of the paper.
[0129] Figure 9 (b) is the right side view of figure 9 (a).
[0130] Like the holding portions 12 and 14, the holding portion 11 is integrated with the integrated wire CB but is not an independent component as shown in figure 9 (a) and (b). For the ease of understanding, the state of the integrated wire CB is removed for explanation.
[0131] The holding portion 11 is tubular, slightly curved in a J-shape, and has a through hole 11a on it. The overall cross-sectional shape is approximately D-shaped, with a flat surface 11d on it.
[0132] On one side of the outlet 11k1 of the holding portion 11, the cross-sectional shape of the through hole 11a is slightly elliptical with a length, and the arc on one end 11a1 in its length direction is smaller than the arc on the other end 11a2, forming a small downward water droplet shape.
[0133] In addition, on the other side of the outlet 11k2 of the holding portion 11, the cross-sectional shape of the through hole 11a is approximately circular.
[0134] That is, the through hole 11a is designed to have a shape corresponding to the end portion of the integrated wire CB shown in figure 3.
[0135] Specifically, the holding portion 11 is connected to the integrated wire CB as a whole, so that the outlet 11k1 on one side of the holding portion 11 in figure 9 (a) is located at the position of P14a in figure 3, and the outlet 11k2 on the other side is located at the position of P14b in figure 3. Thus, the cross-sectional shape of the outlet 11k1 on one side of the through hole 11a is in the shape of a falling water droplet, while the cross-sectional shape of the outlet 11k2 on the other side is approximately circular.
[0136] On one side of the outer peripheral surface of the holding portion 11, there is a circular convex seat portion 11b on the outlet 11k1 side. The convex seat portion 11b protrudes slightly in the direction perpendicular to the tube axis direction of the through hole 11a.
[0137] On the opposite side of the convex seat portion 11b on the outer peripheral surface, there is a circular concave seat portion 11c. The concave seat portion 11c is slightly recessed in the direction perpendicular to the tube axis.
[0138] On the outer peripheral surface of the holding portion 14, there are multiple groove portions 11d, which are not shown in the figure. Multiple groove portions 11e are formed on its opposite side.
[0139] Each groove portion 14d, 14e is formed as a groove extending in a direction perpendicular to the axis direction of the through hole 11a.
[0140] The inlay molding of the holding portions 11 and 14 relative to the integrated wire CB can be carried out using the same method for the inlay molding of the holding portion 12.
[0141] In mold M, in addition to the holding portion 12, if the cavities for the holding portion 11 and the holding portion 14 are pre-formed, multiple holding portions can be simultaneously integrated to form the integrated wire CB.
[0142] Through this inlay molding, at least wire 5 and wire material 6 can pass through each holding portion 11-14 and be integrated with them.
[0143] The groove portions 11d to 14d and 11e to 14e are not necessary, but these groove portions 11d and 11e can increase the contact area between the holding portions 11-14 and the resin portion 8, thus further improving the tight fit between the integrated wire CB and the resin portion 8.
[0144] Figure 10 shows the wire HCB with a holding portion formed by integrating the integrated wire CB and each holding portion 11-14 by inlay molding.
[0145] As shown in figure 10, the two ends of the integrated wire CB are respectively equipped with holding portions 11 and 14, and there are holding portions 12 and 13 spaced apart from each other.

[0146] As shown in figure 3, the end of wire material 6 is located inside the holding portions 11 and 14, and only wire 5 extends from the end of the holding portions 11 and 14.
[0147] The wire HCB with a holding portion is inserted in the cavity VV of the mold MM corresponding to the resin portion 8, and then the resin portion 8 is formed by inlay molding to produce the ear hook portion HG.
[0148] Figures 11 and 12 are schematic sectional views of the mode after inserting the wire HCB with a holding portion into the cavity VV and closing the mold.
[0149] More specifically, figure 11 is a cross-sectional view of the portion without the holding portions 11-14, and figure 12 is a cross-sectional view of the positions of the convex seat portion 12b and the concave seat portion 12c with the holding portion 12.
[0150] The docking ejector pin MM1a is preset on the fixed side MM1 of the mold MM, and the docking ejector pin MM1a is respectively docked with the convex seat portions 11b-14b of the holding portions 11-14. At the same time, on the movable mold MM2 of the mold MM, a locking ejector pin MM2a is set to engage with the respective concave seat portions 11c to 14c of the holding portions 11-14.
[0151] Figure 12 is a cross-sectional view illustrated with the holding portion 12 as a representative. Although the other holding portions have different shapes, the method is the same.
[0152] Therefore, when a wire HCB with a holding portion is installed in the cavity VV, it is only necessary to clamp the convex seat portions 11b-14b of the holding portions 11-14 onto each clamping ejector pin MM2a, and the wire HCB with a holding portion can be accurately set in the cavity VV and firmly held.
[0153] When the mold is closed, the convex seat portions 11b-14b are in contact with each docking ejector pin MM1a, and the wire HCB with the holding portion can be more firmly fixed in the specified position and maintain the specified posture in the mold cavity. Therefore, the wire HCB with the holding portion will not be displaced due to the pressure of injection molding.
[0154] The molding range of the resin portion 8 is from the front end of the hook portion 2 to the position P2 (refer to figure 4). The connection between position P2 and boundary position P1 can be achieved, for example, by inserting the front end of the holding portion 11 into the interior of the cylindrical portion 1b extending from one side of the housing 1.
[0155] Figure 13 is a schematic diagram of the appearance when the hook portion 2 is separately circulated as the ear hook 2A.
[0156] In ear hook 2A, one end of wire 5 is led out from one end 2t1 of the hook portion 2, which serves as the main body of ear hook 2A, and a plug 5p is provided at its front end.
[0157] The other end 2t2 of the hook portion 2 is equipped with a pair of claw portion 2k for clamping the other components.
[0158] In addition, the other end of wire 5 is led out from end 2t2, and its front core wire materials 5a and 5b are connected to connector 5n.
[0159] As described above, holes 2h (refer to figure 1) corresponding to the docking ejector pin MM1a and the locking ejector pin MM2a are provided on the resin portion 8 of the ear hook 2A and the earphone 50, and the holes 2h correspond to the positions of the holding portions 11-14. However, each hole 2h does not extend deep into the integrated wire CB, but instead reaches the respective holding portions 11-14 that cover it and have a thickness. Therefore, each hole 2h is an extremely shallow hole with its bottom blocked by each holding portion 11-14.
[0160] That is, the bottom surface of each hole 2h is the surface of each holding portion 11-14.
[0161] Therefore, the appearance of the ear hook 2A and the earphone 50 will not be greatly affected. In addition, when sweating during exercise or encountering rainfall while using outdoors, water droplets will not enter the interior through the holes, and the possibility of malfunction due to water intrusion is also extremely low.
[0162] In addition, in the inlay molding of the resin portion 8, the protruding docking ejector pin MM2a and the locking ejector pin MM1a on the mold are used to contact and engage the wire HCB with a holding portion set in the cavity VV and the corresponding concave and convex seat portions 11c to 14c and convex seat portions 11b to 14b in the shape of these pins, thereby fixing the wire HCB.
[0163] Therefore, the wire HCB with a holding portion can be securely and accurately fixed in the designated position.
[0164] Therefore, the resin portion 8 will not have uneven thickness, and the possibility of malfunction of the ear hook 2A and earphone 50 due to uneven thickness is also

extremely low.
[0165] In addition, it is very simple to set and position the wire HCB with a holding portion inside the cavity VV, so the manufacturing of the ear hook 2A and the earphone 50 is also extremely simple.
[0166] It goes without saying that the embodiments of the present utility model are not limited to the above-mentioned structures and processes. As long as it does not deviate from the scope of the present utility model, it is equally applicable in other variations.
[0167] The convex seat portions 11b-14b of the holding portions 11-14 can also be concave seat portions. In inlay molding, the resin portion 8 can also be formed by clamping the ejector pin on the fixed mold.
[0168] The ear hook portion HG and ear hook 2A are not only applicable to earphones. They can also be used for, for example, so-called built-in earphones and hearing aids with microphones.
[0169] Wire 5 is not limited to two-core wire materials. For example, when the ear hook portion HG and ear hook 2A are used for hearing aids, wire 5 can also be a wire with three or more cores containing the microphone output wire.
[0170] The material of wire material 6 is not limited to SUS, and other metal or resin materials can also be used. More specifically, shape memory alloys or shape memory resins that can memorize the specified shapes can also be used.
[0171] The position of wire material 6 relative to wire 5 is not limited to the horizontal direction when worn as described in the embodiment. The direction that is inclined relative to the horizontal direction or the up and down direction is also acceptable.
[0172] The hook portion 2 is not limited to bending in the same plane. In order to better fit on the external pinna, the hook portion 2 can be curved in a three-dimensional shape. That is, the hook portion 2 can also be bent in a direction that deviates away from the head.
[0173] The number and position of the holding portions 11-14 are not limited. As long as the integrated wire CB can be well configured in the cavity in inlay molding, the number and position of the holding portions can be freely set.
[0174] The covering portion 7 has the function of tightly adhering and fixing the wire 5 and wire material 6. If other components or methods can be used to keep wire 5 and wire material 6 integrated, the covering portion 7 will be optional. For example, a fusion layer can also be set on the surface of wire 5 or wire material 6, and they can be made into a bonded structure by heating.
[0175] The above description of the earphone 50 suitable for the right ear is not limited to single ear devices, but can also be applied to stereo devices with a pair of main body portion HT for the left and right ear, which can be used to listen to stereo sound.
[0176] In order to allow the hook portion 2 to deform well, it is best to set the length of the wire material 6 as long as possible until it is close to the ends on both sides of the hook portion 2. In addition, it is not limited to integrated wire connection, but can also be used for separate connection.

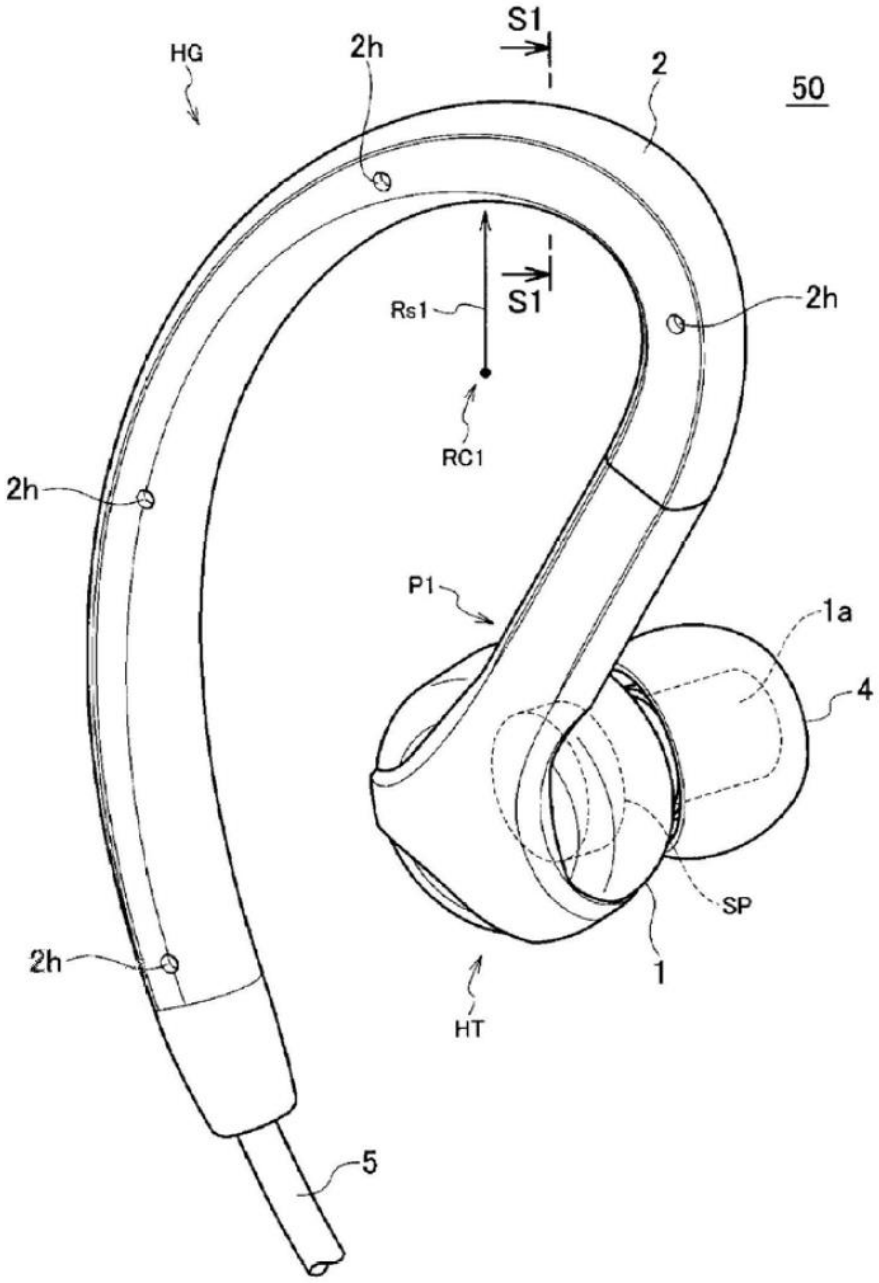

Figure 1

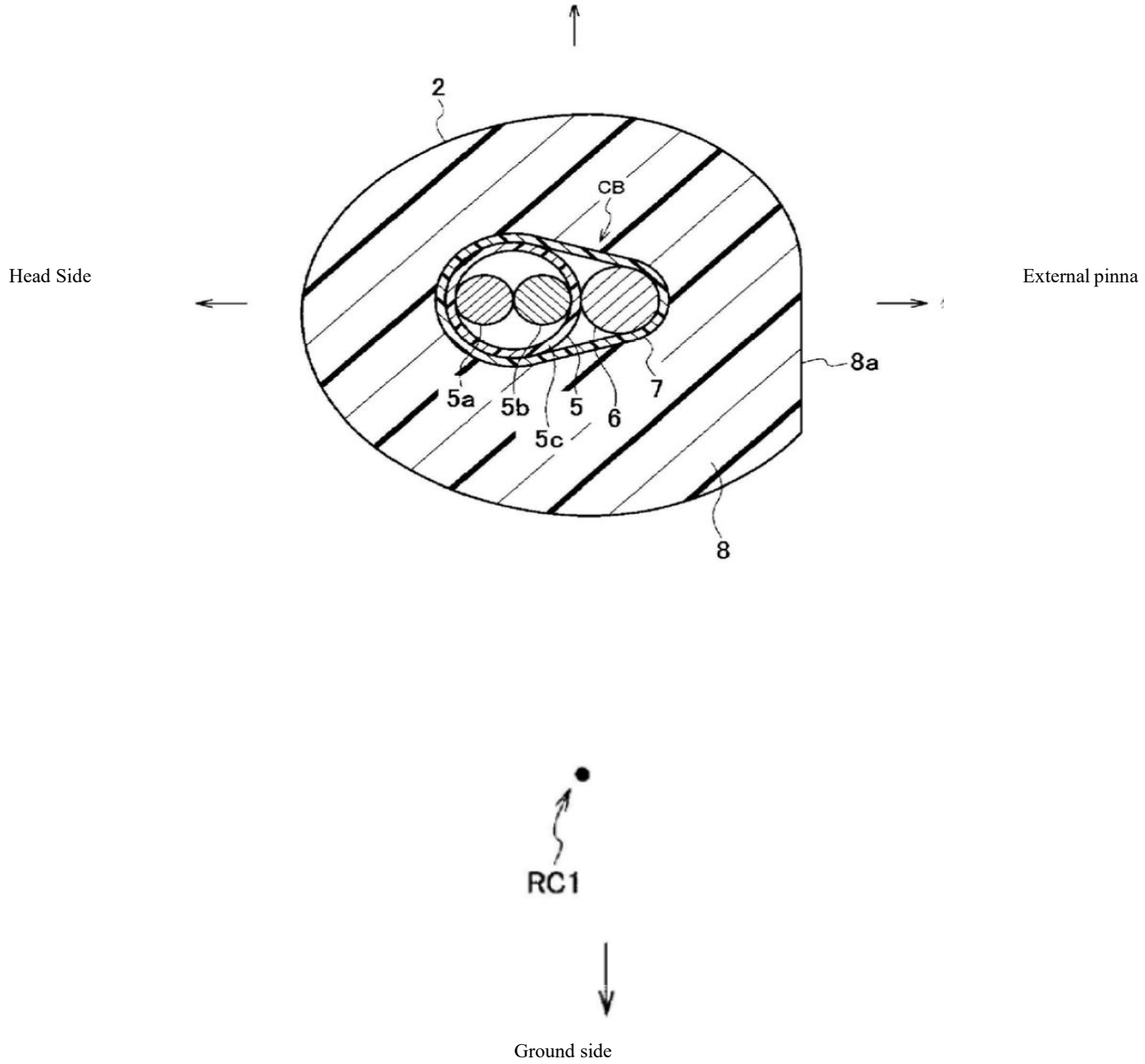

Figure 2

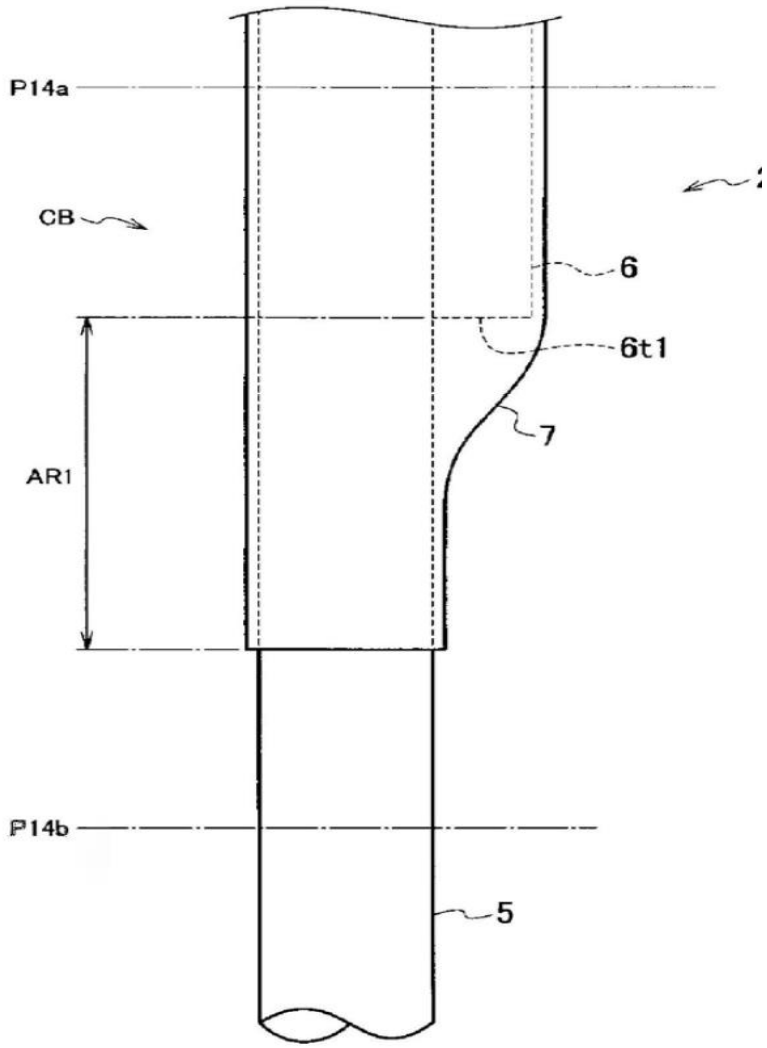

Figure 3

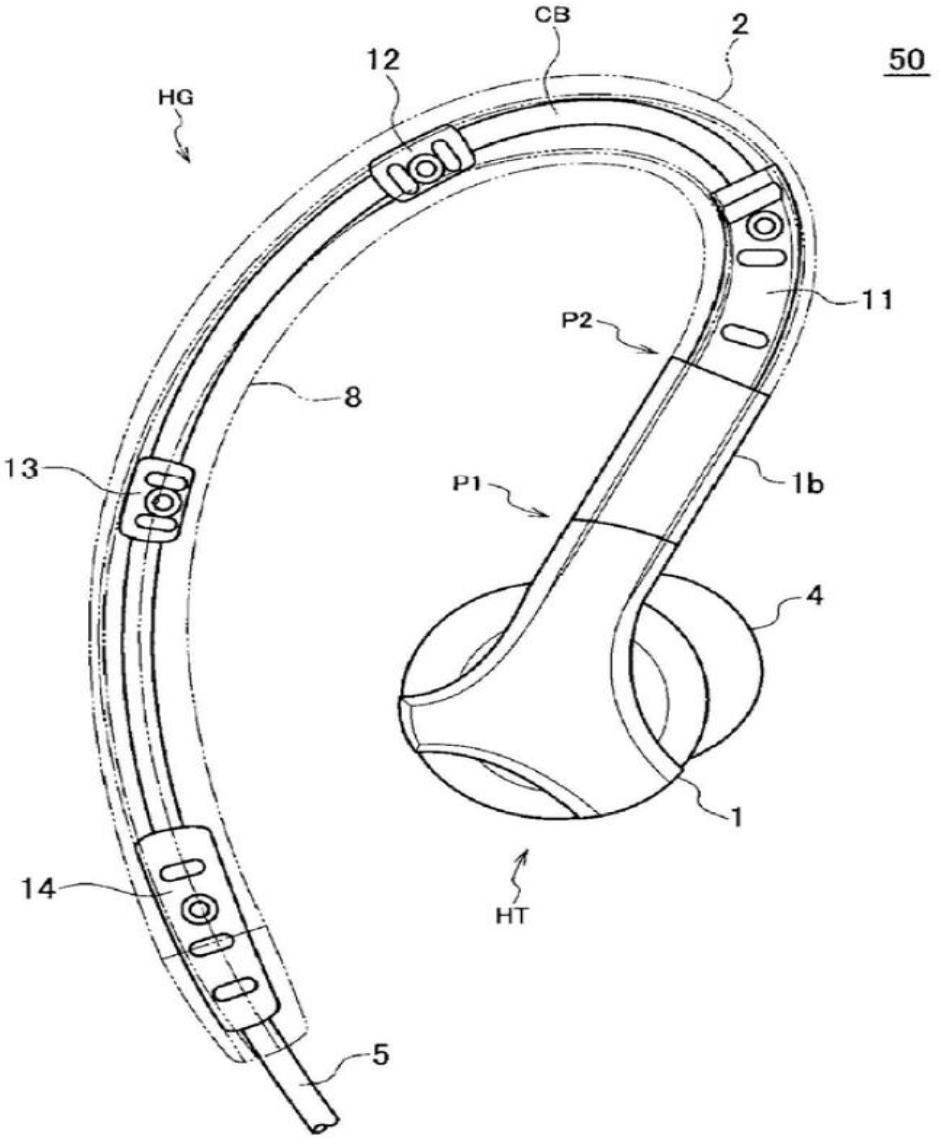

Figure 4

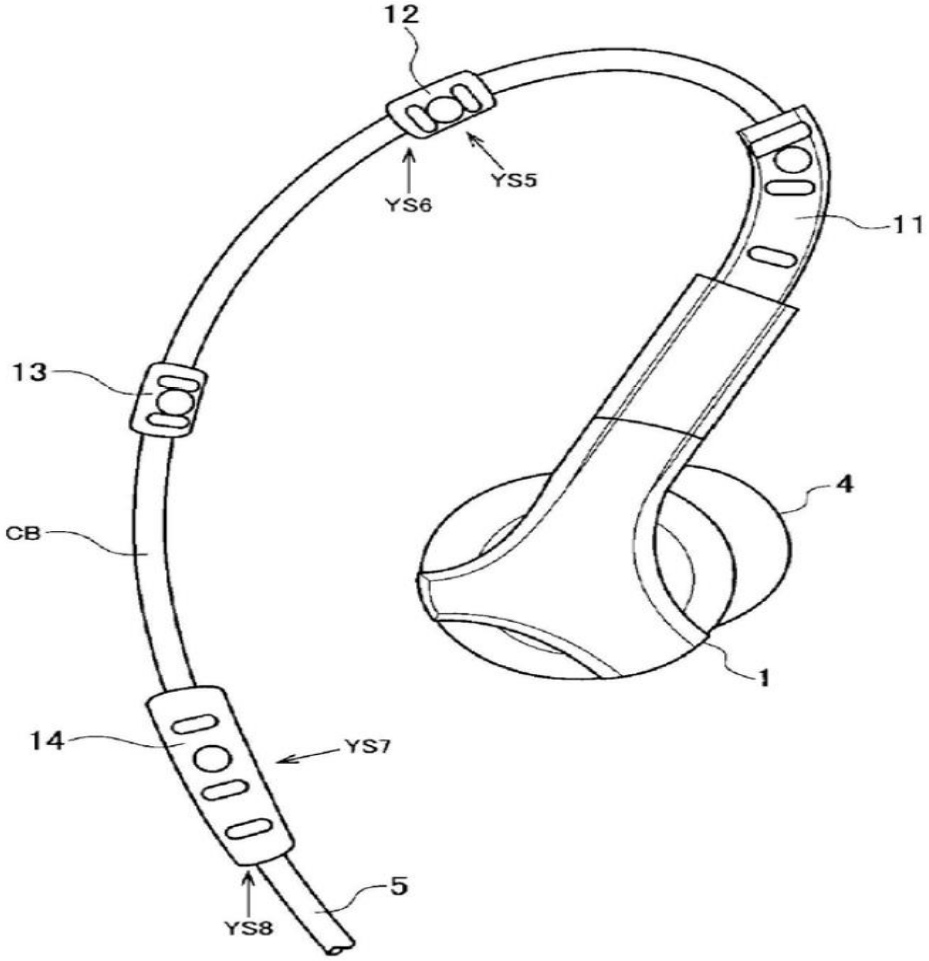

Figure 5

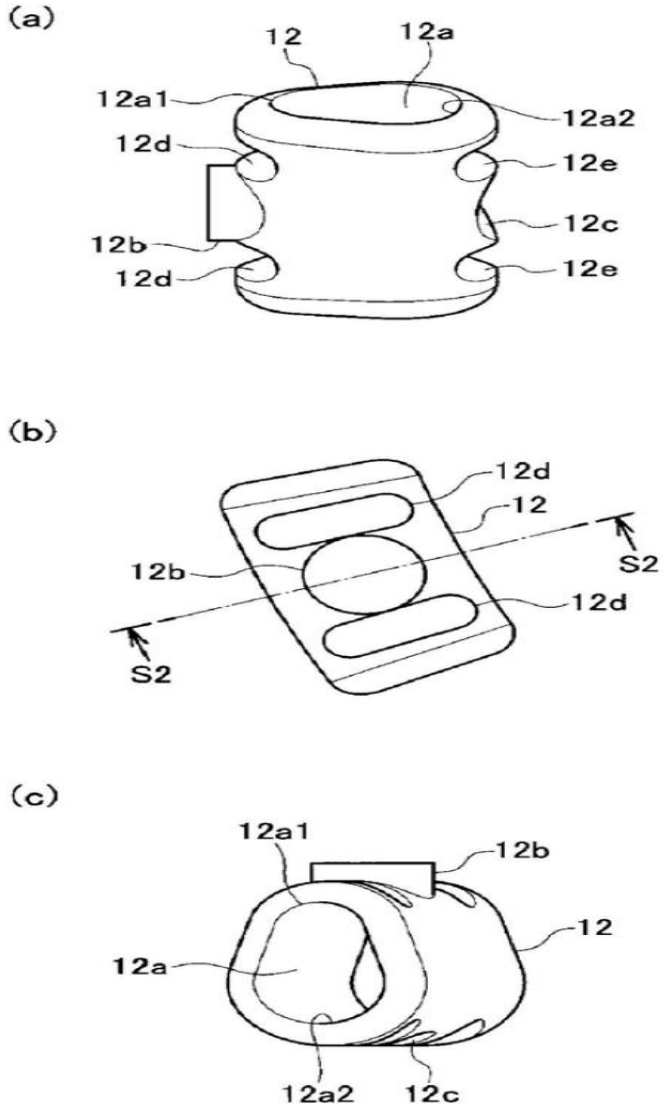
(a)
12
12a
12a1
12a2
12d
12e
12c
12b
12d
12e
(b)
12d
12
12b
S2
12d
S2
(c)
12a1
12b
12
12a
12a2
12c

Figure 6

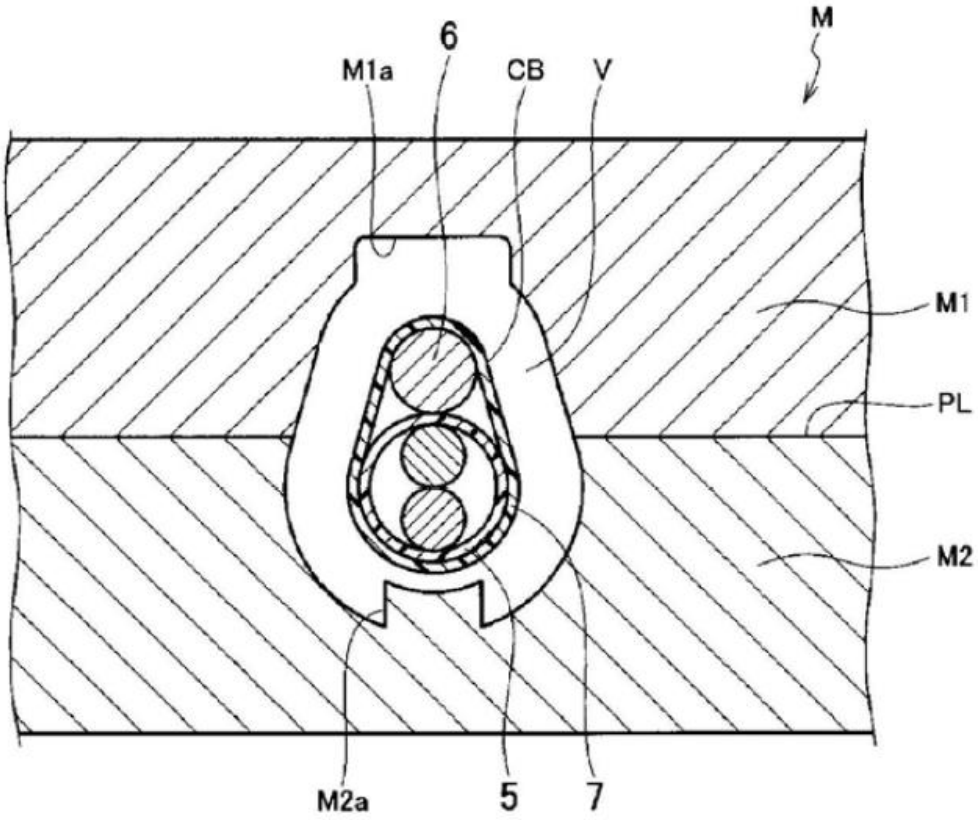

Figure 7

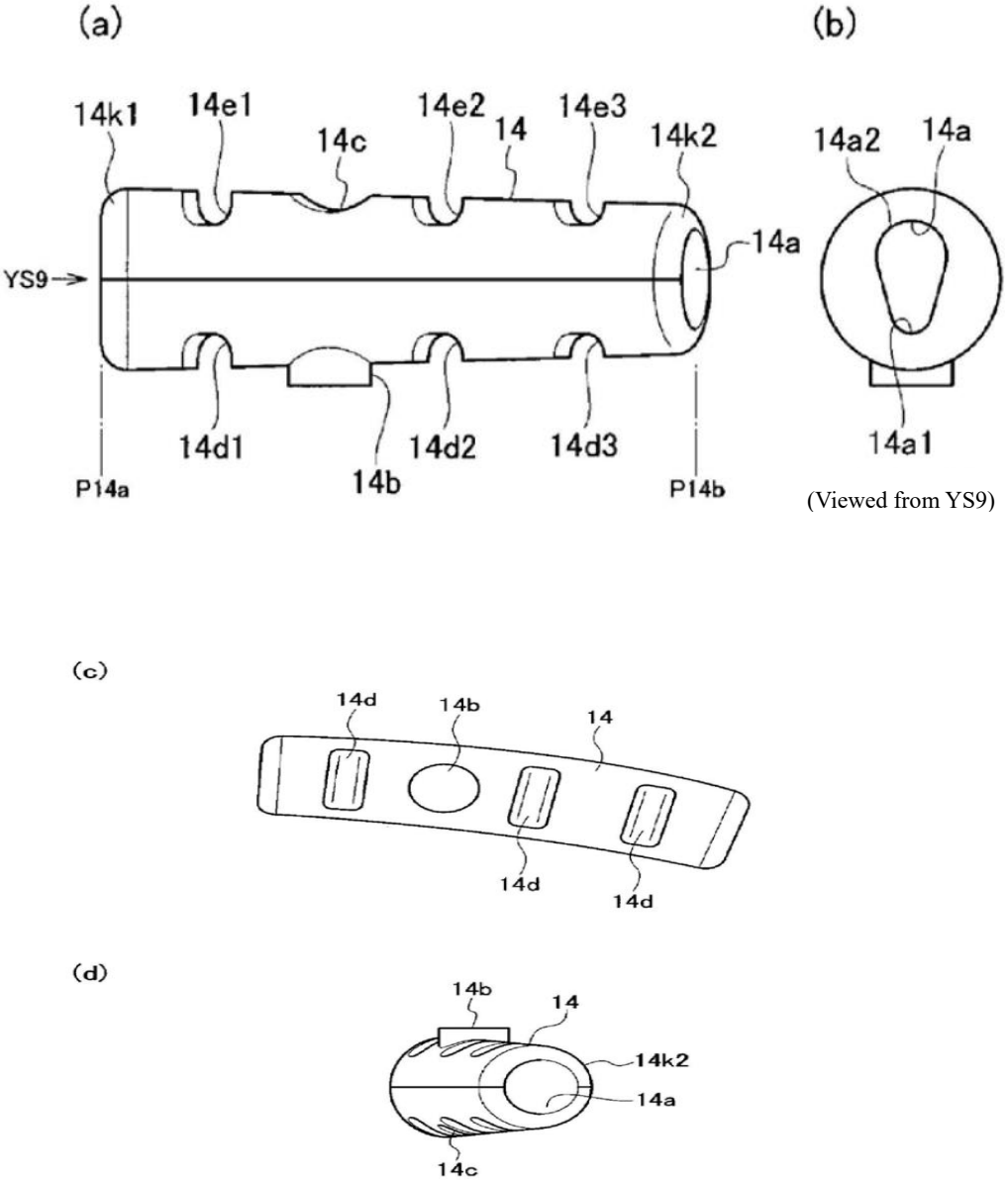
(a)
(b)
14k1
14e1
14c
14e2
14
14e3
14k2
14a
YS9
14d1
14b
14d2
14d3
P14a
P14b
14a2
14a
14a1
(Viewed from YS9)
(c)
14d
14b
14
14d
14d
(d)
14b
14
14k2
14a
14c

Figure 8

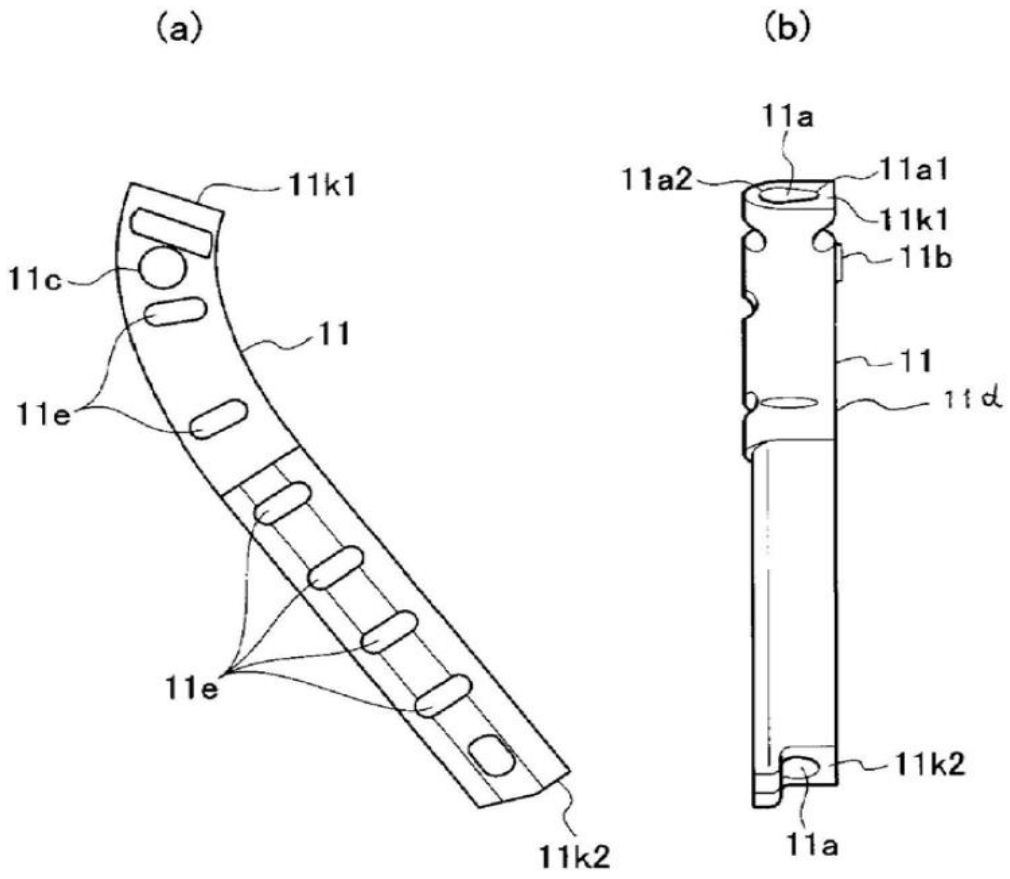
(a)
(b)
11k1
11c
11
11e
11e
11k2
11a
11a2
11a1
11k1
11b
11
11d
11k2
11a

Figure 9

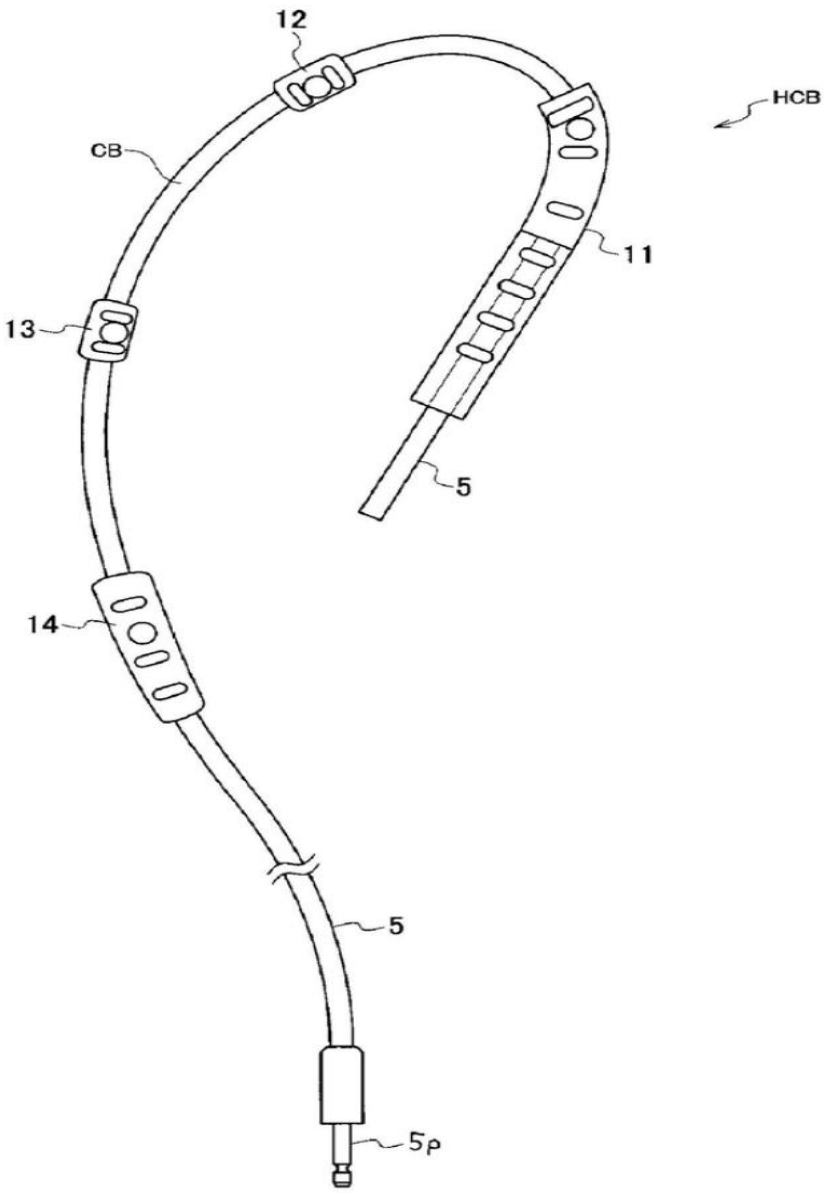

Figure 10

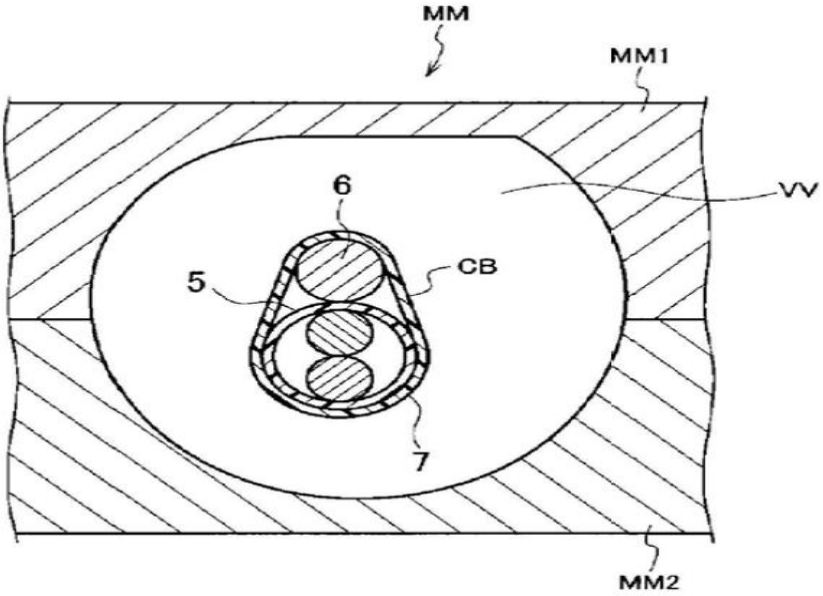

Figure 11

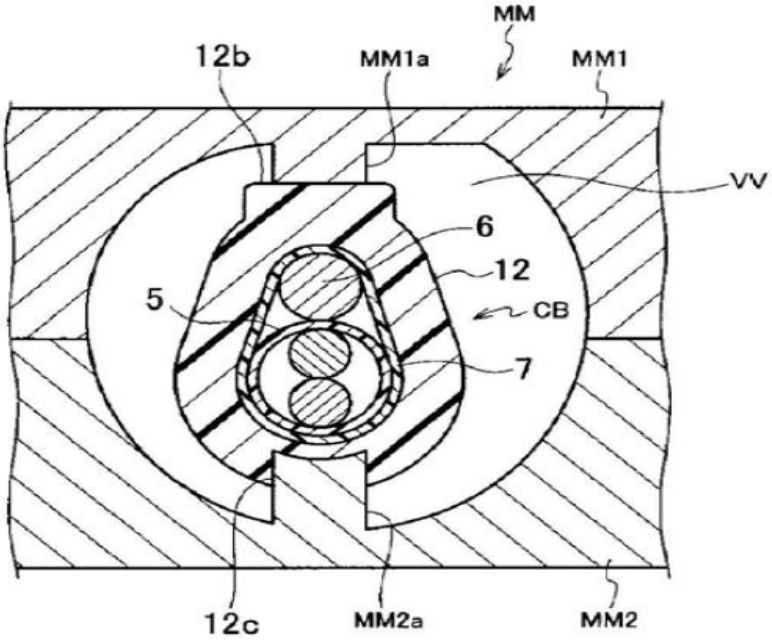

Figure 12

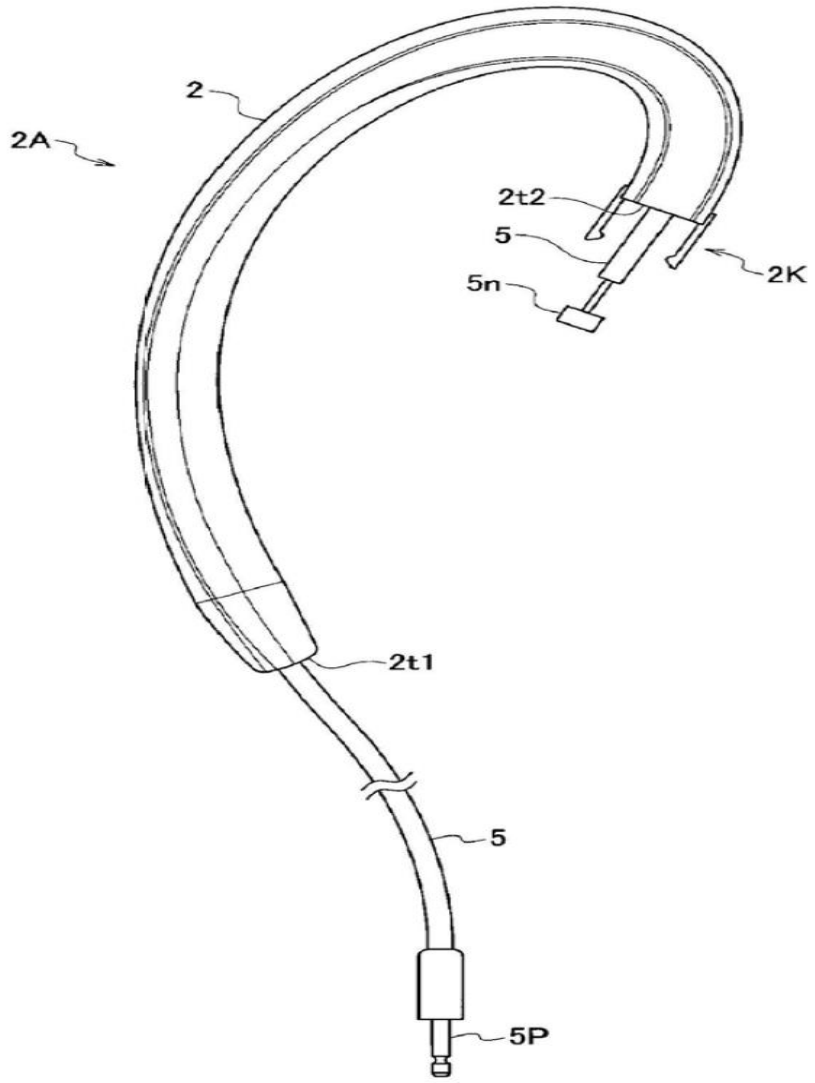

Figure 13

MORNINGSIDE
A Questel Company

TRANSLATION CERTIFICATION

Date: January 25, 2025

To whom it may concern:

This is to certify that the attached translation is an accurate representation of the documents received by this office. The translation was completed from:

- Chinese

To:

- English

The documents are designated as:

- CN202931524U

Renzo Nunez, Project Manager in this company, attests to the following:

"To the best of my knowledge, the aforementioned documents are a true, full and accurate translation of the specified documents."

Signature of Renzo Nunez