US008595778B2

(12) **United States Patent**
Maloney

(10) **Patent No.: US 8,595,778 B2**
(45) **Date of Patent: Nov. 26, 2013**

(54) **USER AUTHENTICATION IN A CONTENT DELIVERY NETWORK**

(75) Inventor: **Ian Maloney**, Dublin (IE)

(73) Assignee: **Level 3 Communications, LLC**, Broomsfield, CO (US)

(*) Notice: Subject to any disclaimer, the term of this patent is extended or adjusted under 35 U.S.C. 154(b) by 949 days.

(21) Appl. No.: **12/604,678**

(22) Filed: **Oct. 23, 2009**

(65) **Prior Publication Data**

US 2010/0122303 A1 May 13, 2010

Related U.S. Application Data

(60) Provisional application No. 61/113,941, filed on Nov. 12, 2008.

(51) **Int. Cl.**
H04N 7/173 (2011.01)

(52) **U.S. Cl.**
USPC **725/87**; 725/91; 725/93

(58) **Field of Classification Search**
USPC 725/87, 91, 93
See application file for complete search history.

(56) **References Cited**

U.S. PATENT DOCUMENTS

4,977,455	A	12/1990	Young
5,151,789	A	9/1992	Young
5,253,066	A	10/1993	Vogel
5,307,173	A	4/1994	Yuen et al.
5,335,079	A	8/1994	Yuen et al.
5,353,121	A	10/1994	Young et al.
5,382,983	A	1/1995	Kwoh et al.
5,457,776	A	10/1995	Wong et al.
5,479,266	A	12/1995	Young et al.
5,479,268	A	12/1995	Young et al.
5,499,103	A	3/1996	Mankovitz
5,512,963	A	4/1996	Mankovitz
5,515,173	A	5/1996	Mankovitz et al.
5,532,732	A	7/1996	Yuen et al.
5,532,754	A	7/1996	Young et al.
5,541,738	A	7/1996	Mankovitz
5,550,576	A	8/1996	Klosterman
5,553,123	A	9/1996	Chan et al.
5,559,550	A	9/1996	Mankovitz

(Continued)

FOREIGN PATENT DOCUMENTS

FR	2893731	5/2007
KR	1020040084932 A	10/2004

OTHER PUBLICATIONS

U.S. Appl. No. 12/495,990, entitled "Flexible Token for Use in Content Delivery," filed Jul. 1, 2009 (Hopkins).

(Continued)

Primary Examiner — Kieu Oanh T Bui

(57) **ABSTRACT**

Embodiments generally disclosed herein include computer-implemented methods for delivery of video content across a network. Such methods comprise a content delivery manager capable of receiving a video stream from a content source for delivery to a end user of a content publisher. The content delivery manager is further capable of detecting a trigger signal within the video stream. For example, the trigger signal can indicate a temporal mark injected into the video stream by the content publisher. During general operation, the content delivery manager processes the trigger signal to determine whether to modify delivery of the video stream to the end user. According to another general embodiment, a computer-implemented method is provided for authorizing delivery of a video stream to an end user.

20 Claims, 22 Drawing Sheets

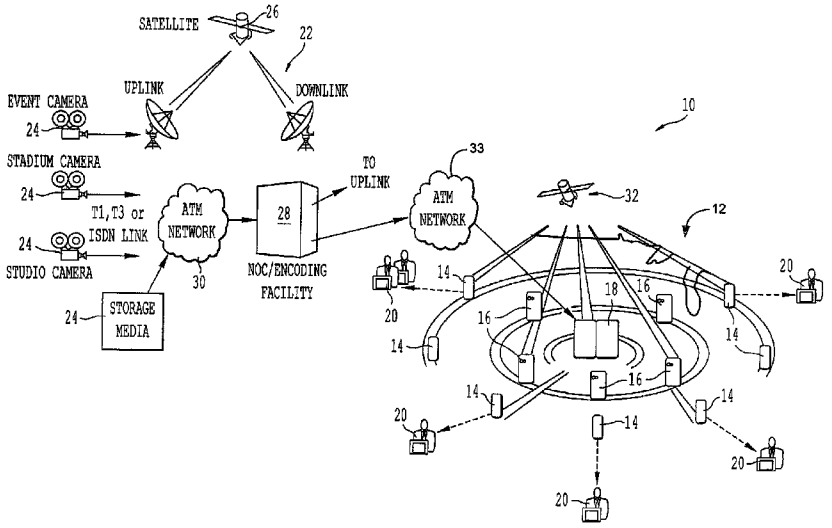

GOOGLE EXHIBIT 1001

(56) **References Cited**

U.S. PATENT DOCUMENTS

5,600,711 A 2/1997 Yuen
5,619,274 A 4/1997 Roop et al.
5,640,484 A 6/1997 Mankovitz
5,654,886 A 8/1997 Zereski, Jr. et al.
5,684,525 A 11/1997 Klosterman
5,701,383 A 12/1997 Russo et al.
5,706,145 A 1/1998 Hindman et al.
5,727,060 A 3/1998 Young
5,727,159 A 3/1998 Kikinis
5,734,786 A 3/1998 Mankovitz
5,742,762 A 4/1998 Scholl et al.
5,745,909 A 4/1998 Perlman et al.
5,748,188 A 5/1998 Hu et al.
5,790,198 A 8/1998 Roop et al.
5,801,787 A 9/1998 Schein et al.
5,805,815 A 9/1998 Hill
5,808,608 A 9/1998 Young et al.
5,809,204 A 9/1998 Young et al.
5,812,205 A 9/1998 Milnes et al.
5,822,324 A 10/1998 Kostresti et al.
5,828,945 A 10/1998 Klosterman
5,848,427 A 12/1998 Hyodo
5,870,150 A 2/1999 Yuen
5,883,661 A 3/1999 Hoarty
5,886,746 A 3/1999 Yuen et al.
5,901,286 A 5/1999 Danknick et al.
5,903,816 A 5/1999 Broadwin et al.
5,915,026 A 6/1999 Mankovitz
5,918,013 A 6/1999 Mighdoll et al.
5,918,014 A 6/1999 Robinson
5,923,362 A 7/1999 Klosterman
5,929,850 A 7/1999 Broadwin et al.
5,940,073 A 8/1999 Klosterman et al.
5,949,954 A 9/1999 Young et al.
5,959,688 A 9/1999 Schein et al.
5,969,748 A 10/1999 Casement et al.
5,970,206 A 10/1999 Yuen et al.
5,974,222 A 10/1999 Yuen et al.
5,978,791 A 11/1999 Farber
5,982,445 A 11/1999 Eyer et al.
5,987,213 A 11/1999 Mankovitz et al.
5,987,518 A 11/1999 Gotwald
5,988,078 A 11/1999 Levine
5,991,498 A 11/1999 Young
5,996,025 A 11/1999 Day
6,002,394 A 12/1999 Schein
6,006,257 A 12/1999 Slezak
6,016,141 A 1/2000 Knudson et al.
6,028,599 A 2/2000 Yuen et al.
6,034,689 A 3/2000 White et al.
6,049,652 A 4/2000 Yuen et al.
6,049,831 A 4/2000 Gardell
6,052,145 A 4/2000 Macrae et al.
6,072,983 A 6/2000 Klosterman
6,075,551 A 6/2000 Berezowski et al.
6,075,575 A 6/2000 Schein et al.
6,078,348 A 6/2000 Klosterman et al.
6,091,882 A 7/2000 Yuen et al.
6,118,492 A 9/2000 Milnes et al.
6,133,909 A 10/2000 Schein et al.
6,137,950 A 10/2000 Yuen
6,144,401 A 11/2000 Casement et al.
6,151,059 A 11/2000 Schein et al.
6,167,188 A 12/2000 Young et al.
6,177,931 B1 1/2001 Alexander et al.
6,185,598 B1 2/2001 Farber
6,189,039 B1 2/2001 Harvey
6,195,680 B1 2/2001 Goldszmidt
6,216,265 B1 4/2001 Roop et al.
6,226,618 B1 5/2001 Downs
6,239,794 B1 5/2001 Yuen et al.
6,240,555 B1 5/2001 Shoff et al.
6,247,176 B1 6/2001 Schein et al.
6,262,722 B1 7/2001 Allison et al.
6,263,313 B1 7/2001 Milsted
6,263,501 B1 7/2001 Schein et al.
6,272,566 B1 8/2001 Craft
6,275,825 B1 8/2001 Kobayashi et al.
6,311,182 B1 10/2001 Colbath
6,323,911 B1 11/2001 Schein et al.
6,341,195 B1 1/2002 Mankovitz et al.
6,341,374 B2 1/2002 Schein et al.
6,388,714 B1 5/2002 Schein et al.
6,396,546 B1 5/2002 Alten et al.
6,398,245 B1 6/2002 Gruse
6,405,188 B1 6/2002 Schwartz
6,412,110 B1 6/2002 Schein et al.
6,415,280 B1 7/2002 Farber
6,418,421 B1 7/2002 Hurtado
6,430,358 B1 8/2002 Yuen et al.
6,430,359 B1 8/2002 Yuen et al.
6,453,471 B1 9/2002 Klosterman
6,460,082 B1 10/2002 Lumelsky
6,460,181 B1 10/2002 Donnelly
6,463,508 B1 10/2002 Wolf
6,466,734 B2 10/2002 Yuen et al.
6,469,753 B1 10/2002 Klosterman et al.
6,477,705 B1 11/2002 Yuen et al.
6,477,707 B1 * 11/2002 King et al. 725/97
6,490,580 B1 12/2002 Dey
6,493,707 B1 12/2002 Dey
6,498,895 B2 12/2002 Young et al.
6,505,348 B1 1/2003 Knowles et al.
6,538,701 B1 3/2003 Yuen
6,549,719 B2 4/2003 Mankovitz
6,564,379 B1 5/2003 Knudson et al.
6,567,606 B2 5/2003 Milnes et al.
6,587,837 B1 7/2003 Spagna
6,588,013 B1 7/2003 Lumley et al.
6,654,807 B2 11/2003 Farber
6,668,133 B2 12/2003 Yuen et al.
6,687,906 B1 2/2004 Yuen et al.
6,732,369 B1 5/2004 Schein et al.
6,742,183 B1 5/2004 Reynolds et al.
6,745,391 B1 6/2004 Macrae et al.
6,756,997 B1 6/2004 Ward, III et al.
6,760,537 B2 7/2004 Mankovitz
6,763,377 B1 7/2004 Belknap
6,799,326 B2 9/2004 Boylan, III et al.
6,799,327 B1 9/2004 Reynolds et al.
6,850,693 B2 2/2005 Young et al.
6,859,791 B1 2/2005 Spagna
6,859,799 B1 2/2005 Yuen
6,862,264 B1 3/2005 Moura et al.
6,928,442 B2 8/2005 Farber
6,963,910 B1 11/2005 Belknap
6,965,890 B1 11/2005 Dey
7,039,633 B1 5/2006 Dey
7,039,935 B2 5/2006 Knudson et al.
7,054,935 B2 5/2006 Farber
7,069,576 B1 6/2006 Knudson et al.
7,103,564 B1 9/2006 Ehnebuske
7,110,984 B1 9/2006 Spagna
7,117,259 B1 10/2006 Rohwer
7,162,468 B2 1/2007 Schwartz
7,188,085 B2 3/2007 Pelletier
7,206,748 B1 4/2007 Gruse
7,404,010 B1 7/2008 Gardell et al.
7,487,529 B1 2/2009 Orlick
7,647,418 B2 * 1/2010 Ash et al. 709/231
7,720,432 B1 5/2010 Colby et al.
2001/0029610 A1 10/2001 Corvin et al.
2001/0047298 A1 11/2001 Moore et al.
2001/0054181 A1 12/2001 Corvin
2002/0073424 A1 6/2002 Ward, III et al.
2002/0124255 A1 9/2002 Reichardt et al.
2003/0005445 A1 1/2003 Schein et al.
2003/0056219 A1 3/2003 Reichardt et al.
2003/0063752 A1 4/2003 Medvinsky et al.
2003/0110495 A1 6/2003 Bennington et al.
2003/0110499 A1 6/2003 Knudson et al.
2003/0115599 A1 6/2003 Bennington et al.
2003/0115602 A1 6/2003 Knee et al.
2003/0163813 A1 8/2003 Klosterman et al.

(56) **References Cited**

U.S. PATENT DOCUMENTS

2003/0164858	A1	9/2003	Klosterman et al.
2003/0188310	A1	10/2003	Klosterman et al.
2003/0188311	A1	10/2003	Yuen et al.
2003/0196201	A1	10/2003	Schein et al.
2003/0204847	A1	10/2003	Ellis et al.
2003/0208756	A1	11/2003	Macrae et al.
2004/0010806	A1	1/2004	Yuen et al.
2004/0045025	A1	3/2004	Ward, III et al.
2004/0107437	A1	6/2004	Reichardt et al.
2004/0139097	A1	7/2004	Farber
2004/0168189	A1	8/2004	Reynolds et al.
2004/0194138	A1	9/2004	Boylan, III et al.
2004/0205811	A1	10/2004	Grandy et al.
2004/0261098	A1	12/2004	Macrae et al.
2005/0010949	A1	1/2005	Ward et al.
2005/0021202	A1	1/2005	Russell et al.
2005/0028201	A1	2/2005	Klosterman et al.
2005/0114296	A1	5/2005	Farber
2005/0125823	A1	6/2005	McCoy et al.
2005/0149964	A1	7/2005	Thomas et al.
2005/0155056	A1	7/2005	Knee et al.
2005/0198334	A1	9/2005	Farber
2005/0216936	A1	9/2005	Knudson et al.
2005/0235307	A1	10/2005	Relan et al.
2005/0251824	A1	11/2005	Thomas et al.
2006/0015574	A1	1/2006	Seed
2006/0015892	A1	1/2006	Hirt et al.
2006/0156336	A1	7/2006	Knudson et al.
2006/0212894	A1	9/2006	Knudson et al.
2006/0218265	A1	9/2006	Farber
2006/0277574	A1	12/2006	Schein et al.
2006/0277576	A1	12/2006	Acharya et al.
2006/0288366	A1	12/2006	Boylan, III et al.
2007/0016926	A1	1/2007	Ward, III et al.
2007/0033613	A1	2/2007	Ward, III et al.
2007/0107010	A1	5/2007	Jolna et al.
2007/0179950	A1	8/2007	Kester et al.
2007/0233705	A1	10/2007	Farber
2007/0233706	A1	10/2007	Farber
2007/0233846	A1	10/2007	Farber
2007/0233884	A1	10/2007	Farber
2008/0065724	A1	3/2008	Seed
2008/0071855	A1	3/2008	Farber
2008/0071859	A1	3/2008	Seed
2008/0104268	A1	5/2008	Farber
2008/0104624	A1	5/2008	Narasimhan et al.
2008/0140800	A1	6/2008	Farber
2008/0201736	A1	8/2008	Gordon et al.
2008/0215735	A1	9/2008	Farber
2008/0215750	A1	9/2008	Farber
2008/0215755	A1	9/2008	Farber
2008/0263056	A1	10/2008	Murray et al.
2008/0263602	A1	10/2008	Murray et al.
2008/0275987	A1	11/2008	Gardell et al.
2009/0259611	A1	10/2009	Wang
2009/0282159	A1	11/2009	Wang
2010/0027974	A1	2/2010	Ansari
2011/0197237	A1 *	8/2011	Turner 725/78

OTHER PUBLICATIONS

International Search Report from WIPO, International Application No. PCT/US2009/061880, International Filing Date Oct. 23, 2009. Date of mailing ISR Jun. 15, 2010, 3 pages.

Written Opinion, International Application No. PCT/US2009/061880, International Filing Date Oct. 23, 2009. Date of mailing Written Opinion Jun. 15, 2010, 5 pages.

International Preliminary Report on Patentability, International Application No. PCT/US2009/061880, International Filing Date Oct. 23, 2009. Date of mailing Preliminary Report May 17, 2011, 1 page.

International Search Report from WIPO, International Application No. PCT/US2009/061908, International Filing Date Oct. 23, 2009. Date of mailing ISR May 19, 2010, 5 pages.

Written Opinion, International Application No. PCT/US2009/061908, International Filing Date Oct. 23, 2009. Date of mailing Written Opinion May 19, 2010, 5 pages.

International Preliminary Report on Patentability, International Application No. PCT/US2009/061908, International Filing Date Oct. 23, 2009. Date of mailing Preliminary Report May 17, 2011, 1 page.

European Extended Search Report, dated May 3, 2013, European Appl. No. 09826529.1, 8 pgs.

European Extended Search Report, mailed May 3, 2013, European Appl. No. 09826527.5, 7 pgs.

* cited by examiner

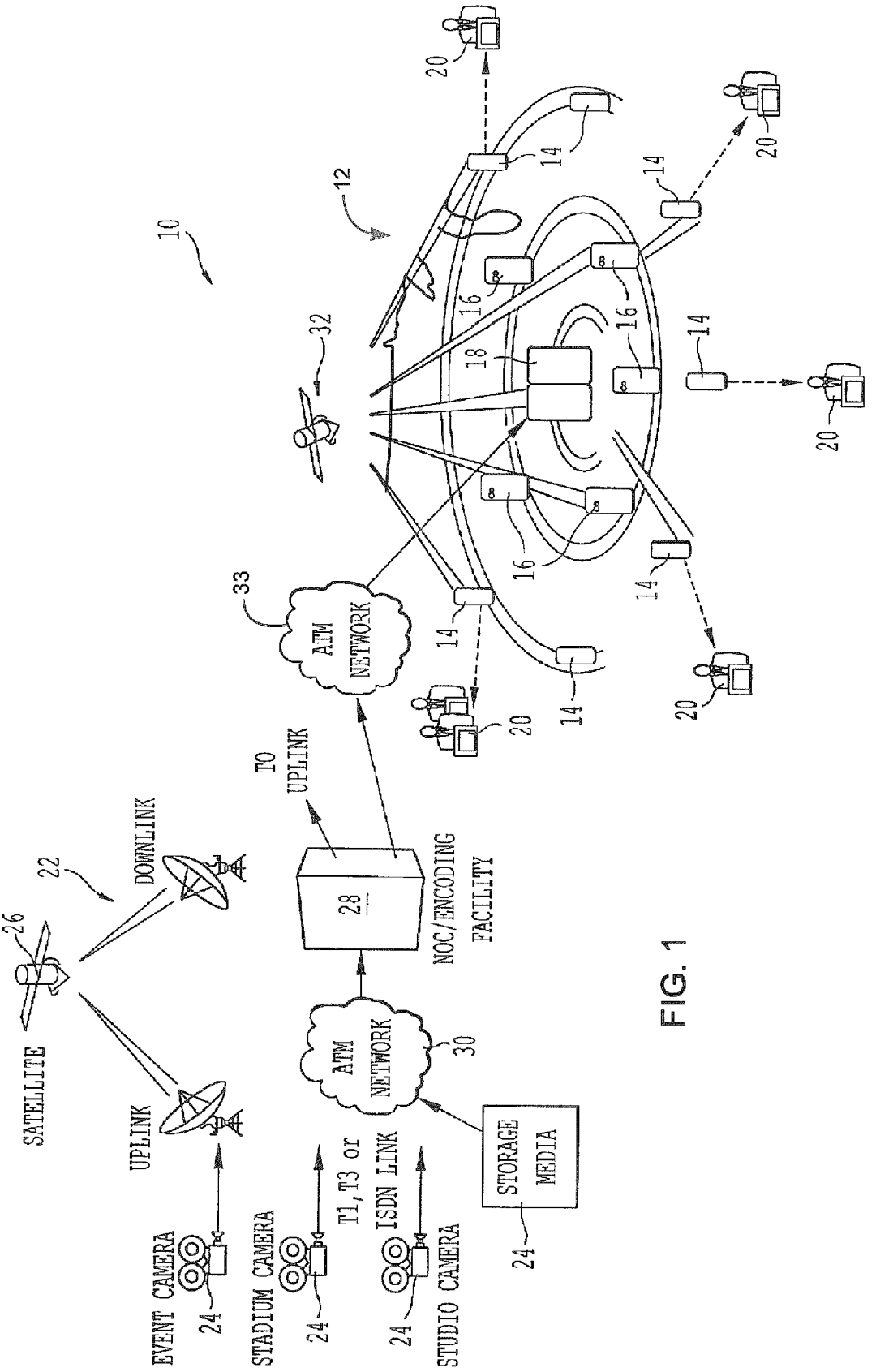
10
12
14
16
18
20
22
24
26
28
30
32
33
SATELLITE
DOWNLINK
UPLINK
EVENT CAMERA
STADIUM CAMERA
STUDIO CAMERA
T1, T3 or
ISDN LINK
ATM NETWORK
ATM NETWORK
TO UPLINK
NOC/ENCODING FACILITY
STORAGE MEDIA

FIG. 1

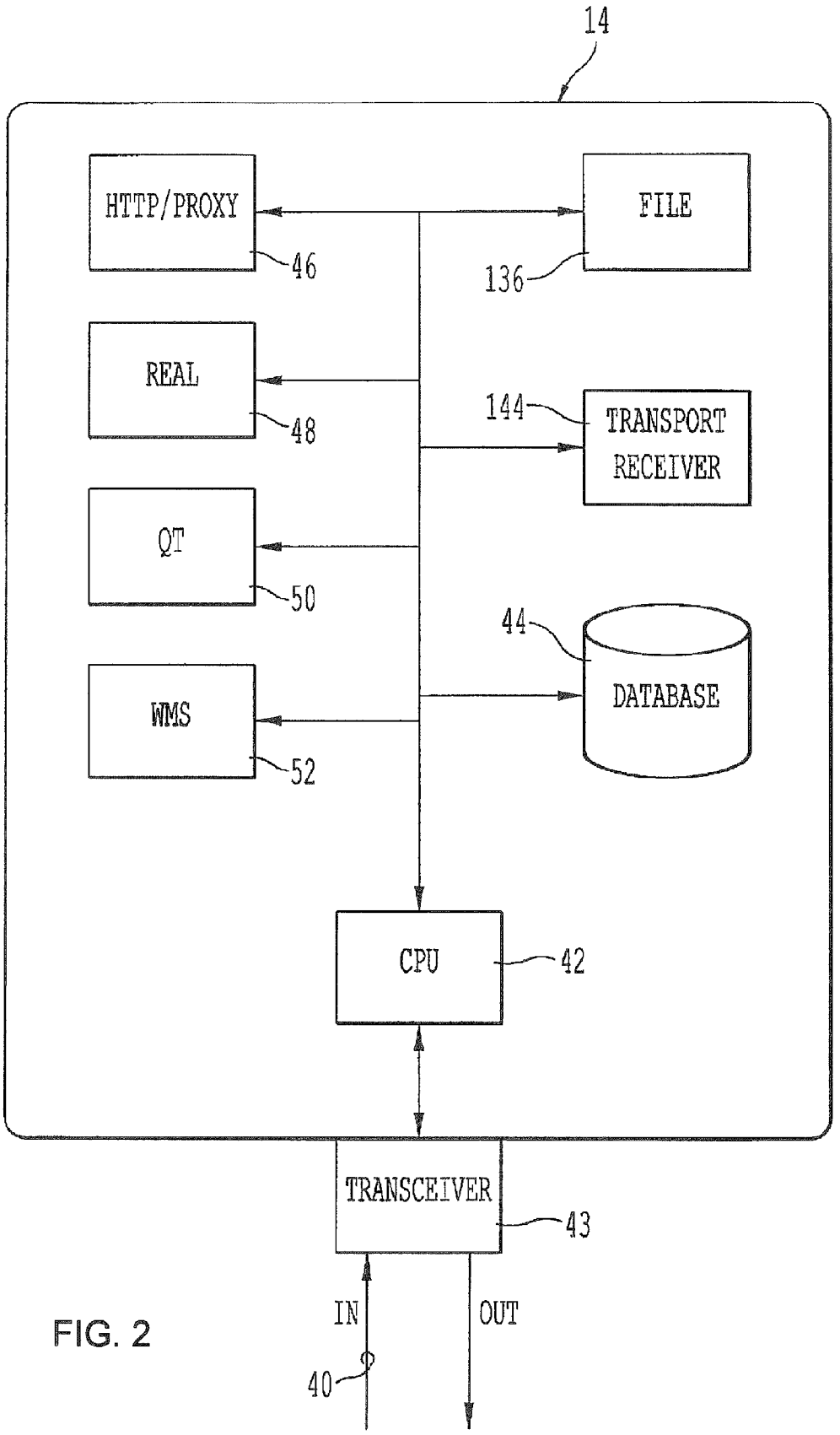
14
HTTP/PROXY
46
FILE
136
REAL
48
144
TRANSPORT RECEIVER
QT
50
44
DATABASE
WMS
52
CPU
42
TRANSCEIVER
43
IN
OUT
40

FIG. 2

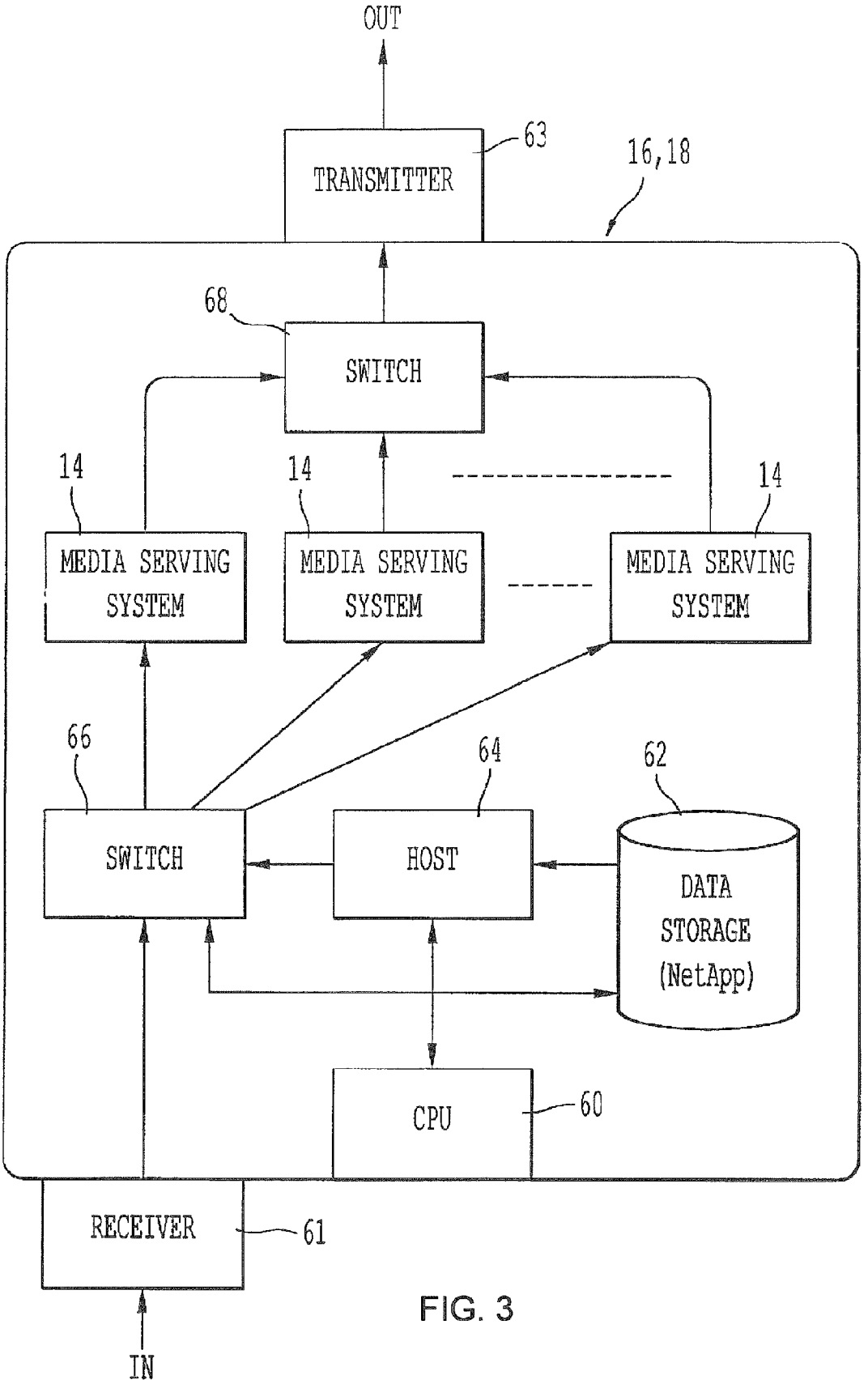
OUT
TRANSMITTER
63
16,18
68
SWITCH
14
14
14
MEDIA SERVING SYSTEM
MEDIA SERVING SYSTEM
MEDIA SERVING SYSTEM
66
64
62
SWITCH
HOST
DATA STORAGE (NetApp)
CPU
60
RECEIVER
61
IN

FIG. 3

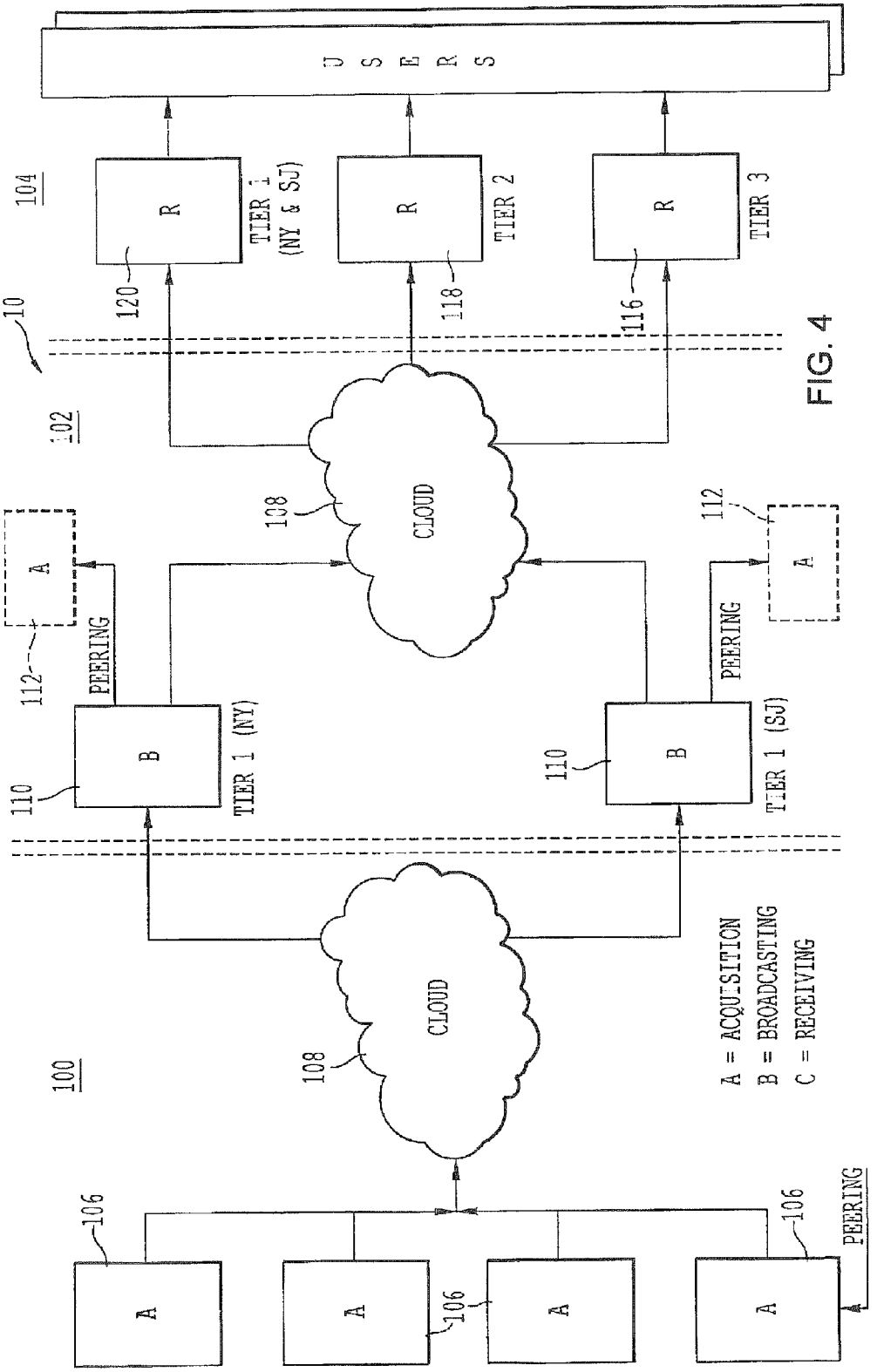
USERS
104
R
TIER 1 (NY & SJ)
R
TIER 2
R
TIER 3
120
118
116
10
102
CLOUD
108
A
112
PEERING
B
TIER 1 (NY)
110
B
TIER 1 (SJ)
110
PEERING
A
112
CLOUD
108
100
A = ACQUISITION
B = BROADCASTING
C = RECEIVING
A
A
A
A
106
106
106
PEERING

FIG. 4

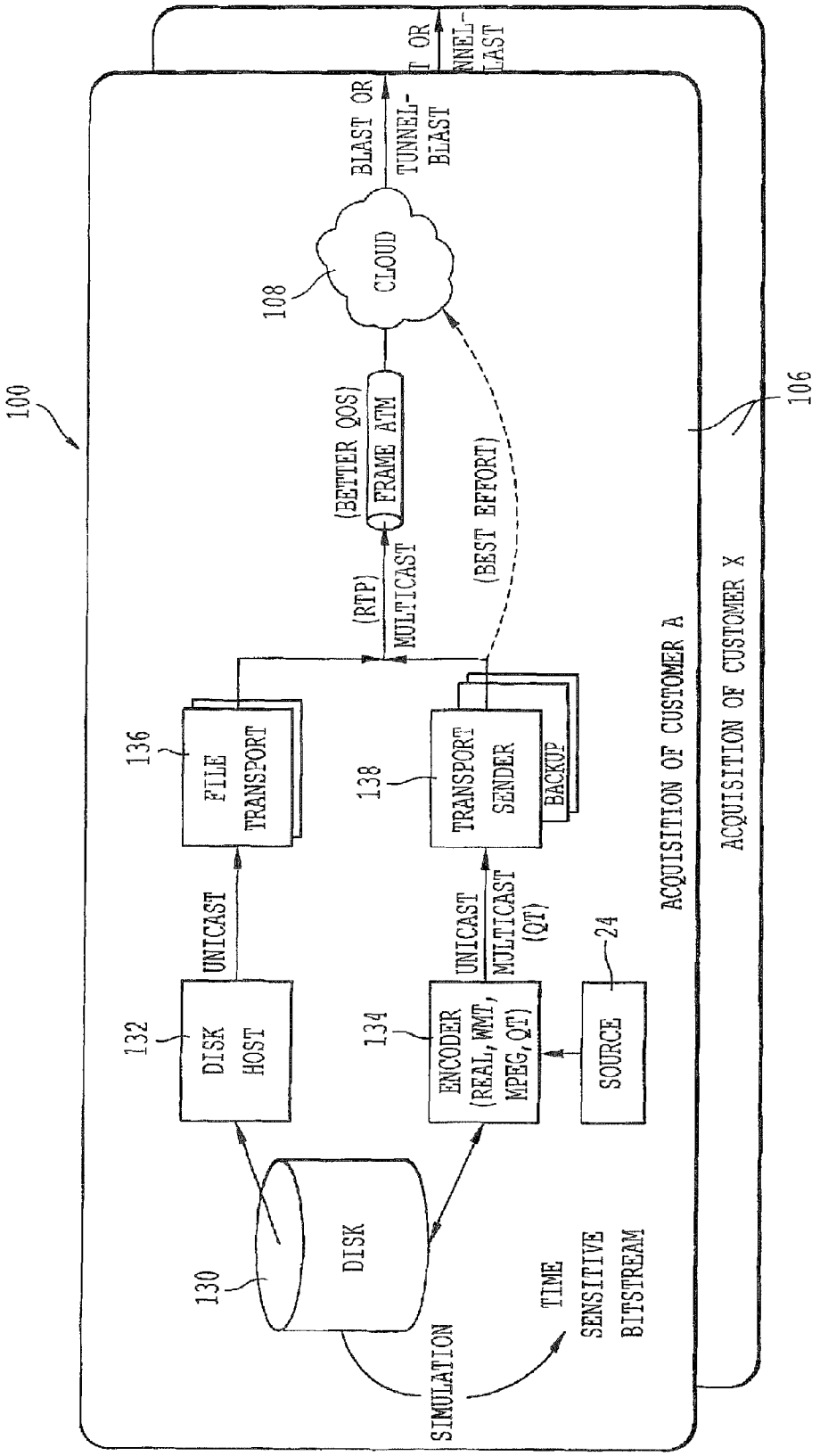
100
106
108
CLOUD
BLAST OR
TUNNEL-
BLAST
T OR
NNEL-
LAST
(BETTER QOS)
FRAME ATM
(RTP)
MULTICAST
(BEST EFFORT)
136
FILE
TRANSPORT
138
TRANSPORT
SENDER
BACKUP
UNICAST
UNICAST
MULTICAST
(QT)
24
132
DISK
HOST
134
ENCODER
(REAL, WMT,
MPEG, QT)
SOURCE
130
DISK
SIMULATION
TIME
SENSITIVE
BITSTREAM
ACQUISITION OF CUSTOMER A
ACQUISITION OF CUSTOMER X

FIG. 5

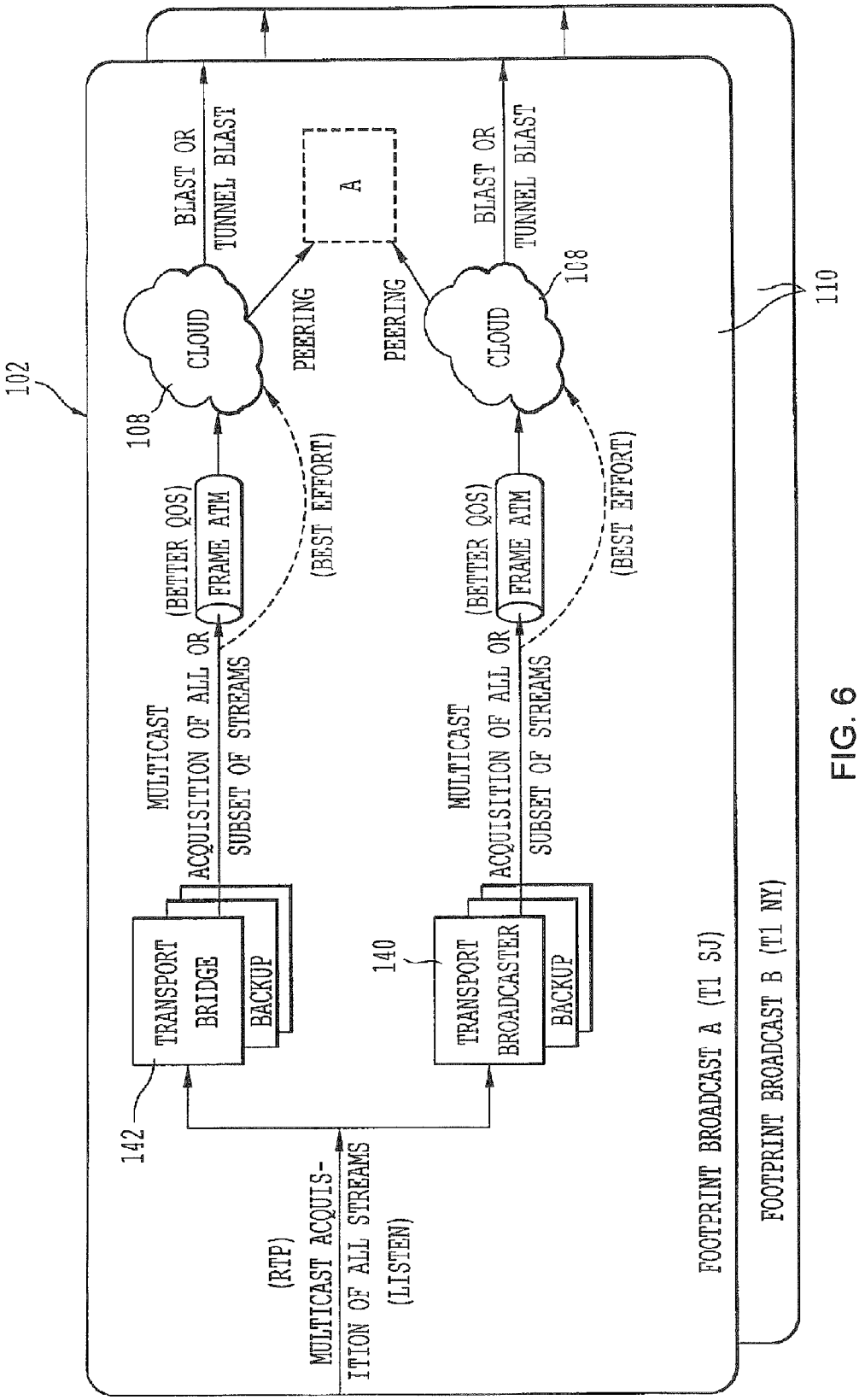
102
108
CLOUD
BLAST OR
TUNNEL BLAST
PEERING
A
PEERING
CLOUD
108
BLAST OR
TUNNEL BLAST
110
(BETTER QOS)
FRAME ATM
(BEST EFFORT)
(BETTER QOS)
FRAME ATM
(BEST EFFORT)
MULTICAST
ACQUISITION OF ALL OR
SUBSET OF STREAMS
MULTICAST
ACQUISITION OF ALL OR
SUBSET OF STREAMS
TRANSPORT
BRIDGE
BACKUP
140
TRANSPORT
BROADCASTER
BACKUP
142
(RTP)
MULTICAST ACQUIS-
ITION OF ALL STREAMS
(LISTEN)
FOOTPRINT BROADCAST A (T1 SJ)
FOOTPRINT BROADCAST B (T1 NY)

FIG. 6

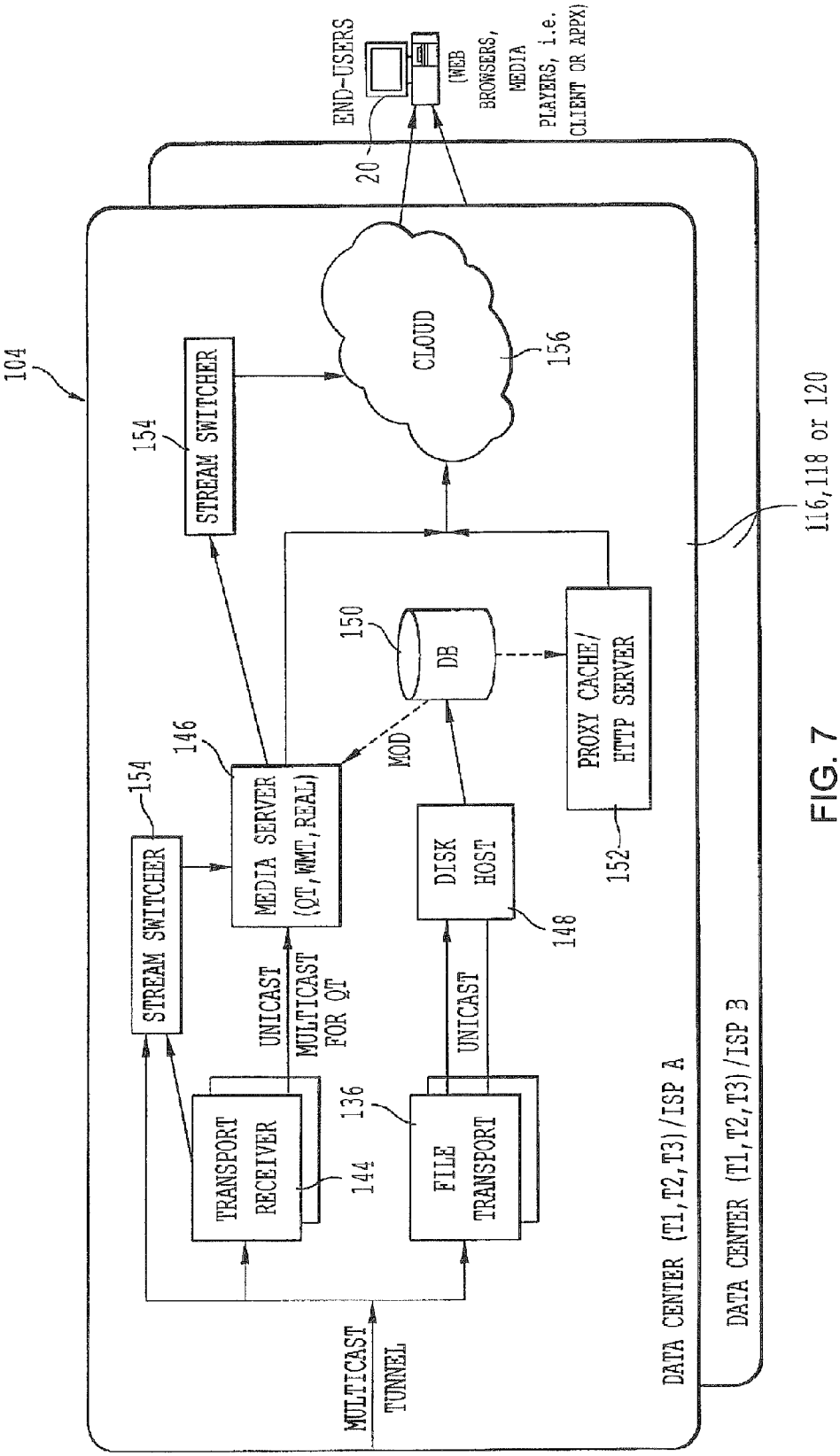
END-USERS
20
(WEB BROWSERS, MEDIA PLAYERS, i.e. CLIENT OR APPX)
104
CLOUD
156
STREAM SWITCHER
154
116,118 or 120
150
DB
PROXY CACHE/ HTTP SERVER
146
MEDIA SERVER (QT, WMT, REAL)
MOD
154
STREAM SWITCHER
DISK HOST
152
148
UNICAST
MULTICAST FOR QT
UNICAST
136
TRANSPORT RECEIVER
144
FILE TRANSPORT
MULTICAST TUNNEL
DATA CENTER (T1,T2,T3)/ISP A
DATA CENTER (T1,T2,T3)/ISP B

FIG. 7

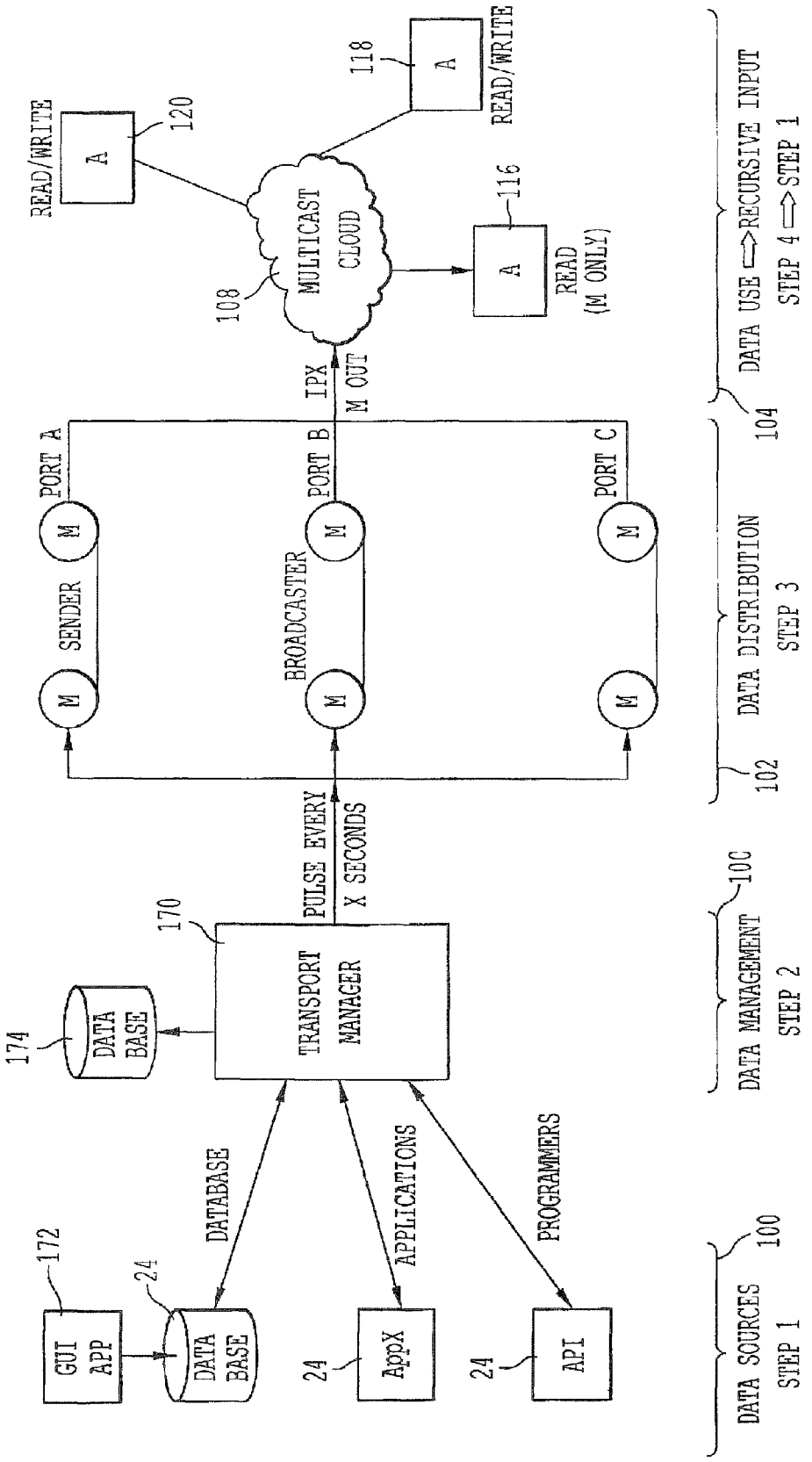
READ/WRITE
A
120
118
A
READ/WRITE
MULTICAST CLOUD
108
116
A
READ (M ONLY)
IPX
M OUT
PORT A
PORT B
PORT C
M
SENDER
BROADCASTER
PULSE EVERY X SECONDS
170
TRANSPORT MANAGER
174
DATA BASE
DATABASE
APPLICATIONS
PROGRAMMERS
172
GUI APP
24
DATA BASE
24
AppX
24
API
DATA USE ⟹ RECURSIVE INPUT
STEP 4 ⟹ STEP 1
104
DATA DISTRIBUTION
STEP 3
102
DATA MANAGEMENT
STEP 2
100
DATA SOURCES
STEP 1

FIG. 8

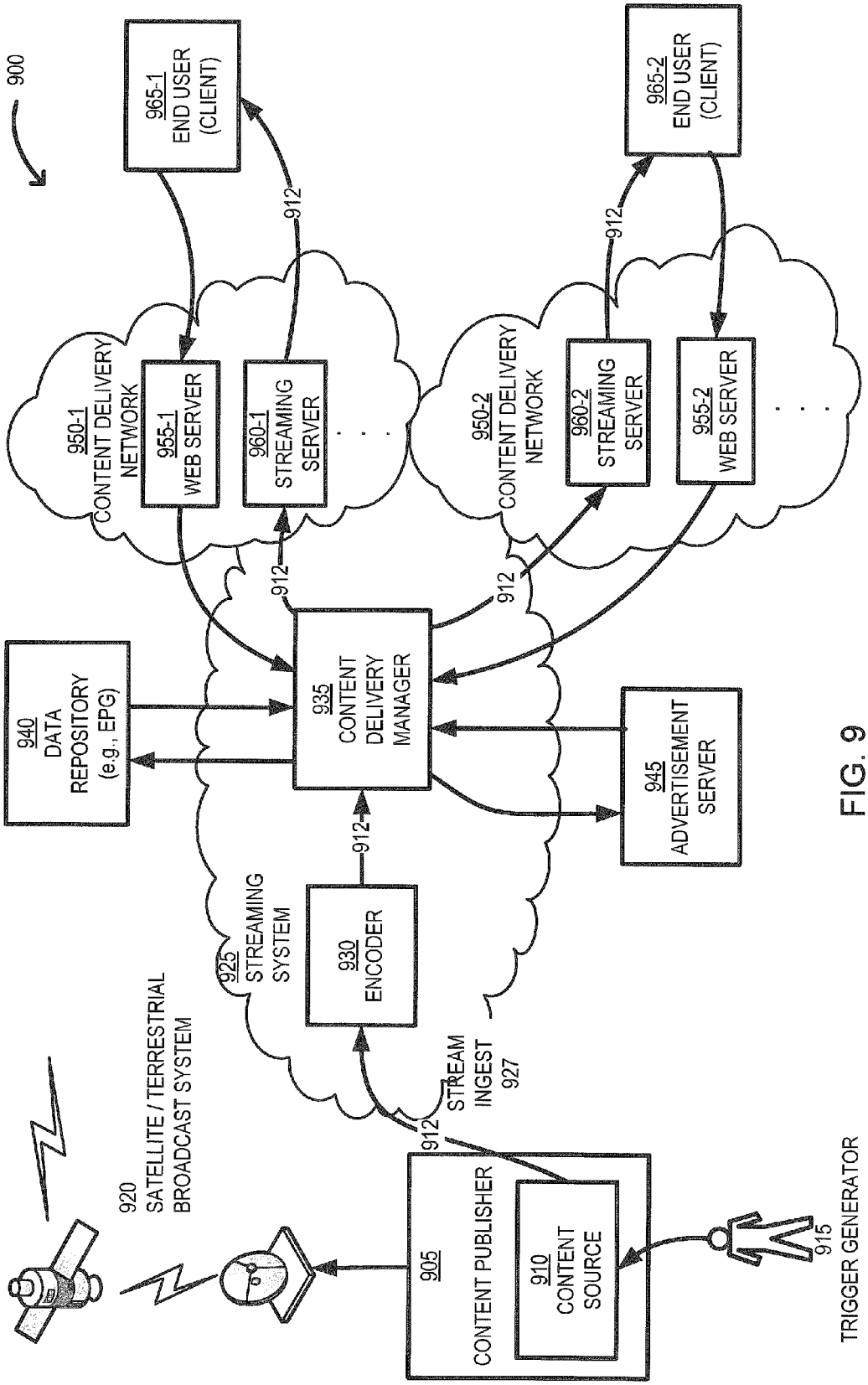
900
965-1
END USER
(CLIENT)
965-2
END USER
(CLIENT)
912
950-1
CONTENT DELIVERY
NETWORK
955-1
WEB SERVER
960-1
STREAMING
SERVER
950-2
CONTENT DELIVERY
NETWORK
960-2
STREAMING
SERVER
955-2
WEB SERVER
940
DATA
REPOSITORY
(e.g., EPG)
935
CONTENT
DELIVERY
MANAGER
945
ADVERTISEMENT
SERVER
925
STREAMING
SYSTEM
930
ENCODER
920
SATELLITE / TERRESTRIAL
BROADCAST SYSTEM
STREAM
INGEST
927
905
CONTENT PUBLISHER
910
CONTENT
SOURCE
915
TRIGGER GENERATOR

FIG. 9

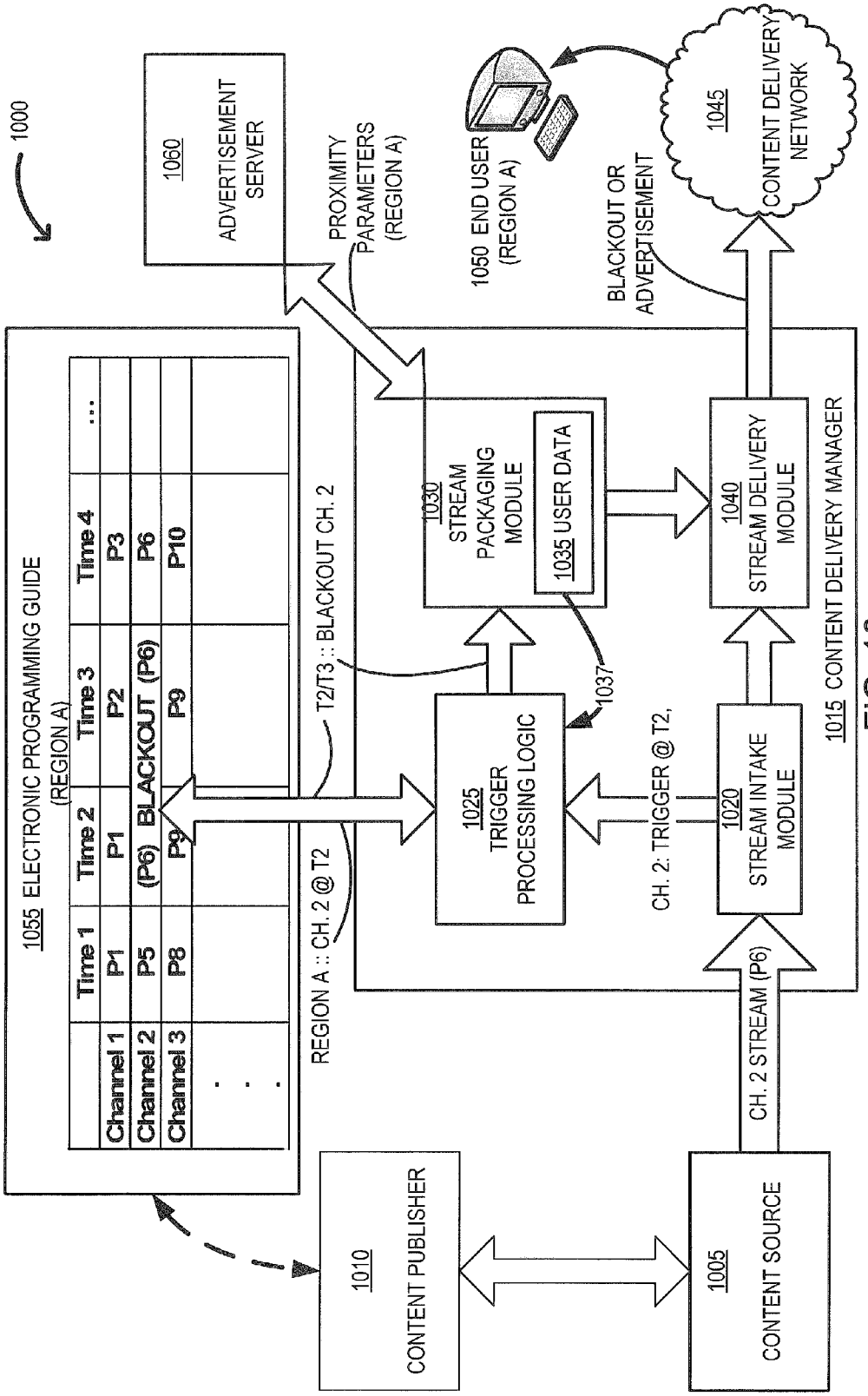
1000
1060 ADVERTISEMENT SERVER
PROXIMITY PARAMETERS (REGION A)
1050 END USER (REGION A)
BLACKOUT OR ADVERTISEMENT
1045 CONTENT DELIVERY NETWORK
1055 ELECTRONIC PROGRAMMING GUIDE (REGION A)
Time 1
Time 2
Time 3
Time 4
...
Channel 1
P1
P1
P2
P3
Channel 2
P5
(P6) BLACKOUT (P6)
P6
Channel 3
P8
P9
P9
P10
. . .
REGION A :: CH. 2 @ T2
T2/T3 :: BLACKOUT CH. 2
1030 STREAM PACKAGING MODULE
1035 USER DATA
1040 STREAM DELIVERY MODULE
1025 TRIGGER PROCESSING LOGIC
1037
CH. 2: TRIGGER @ T2,
1020 STREAM INTAKE MODULE
1015 CONTENT DELIVERY MANAGER
CH. 2 STREAM (P6)
1010 CONTENT PUBLISHER
1005 CONTENT SOURCE

FIG. 10

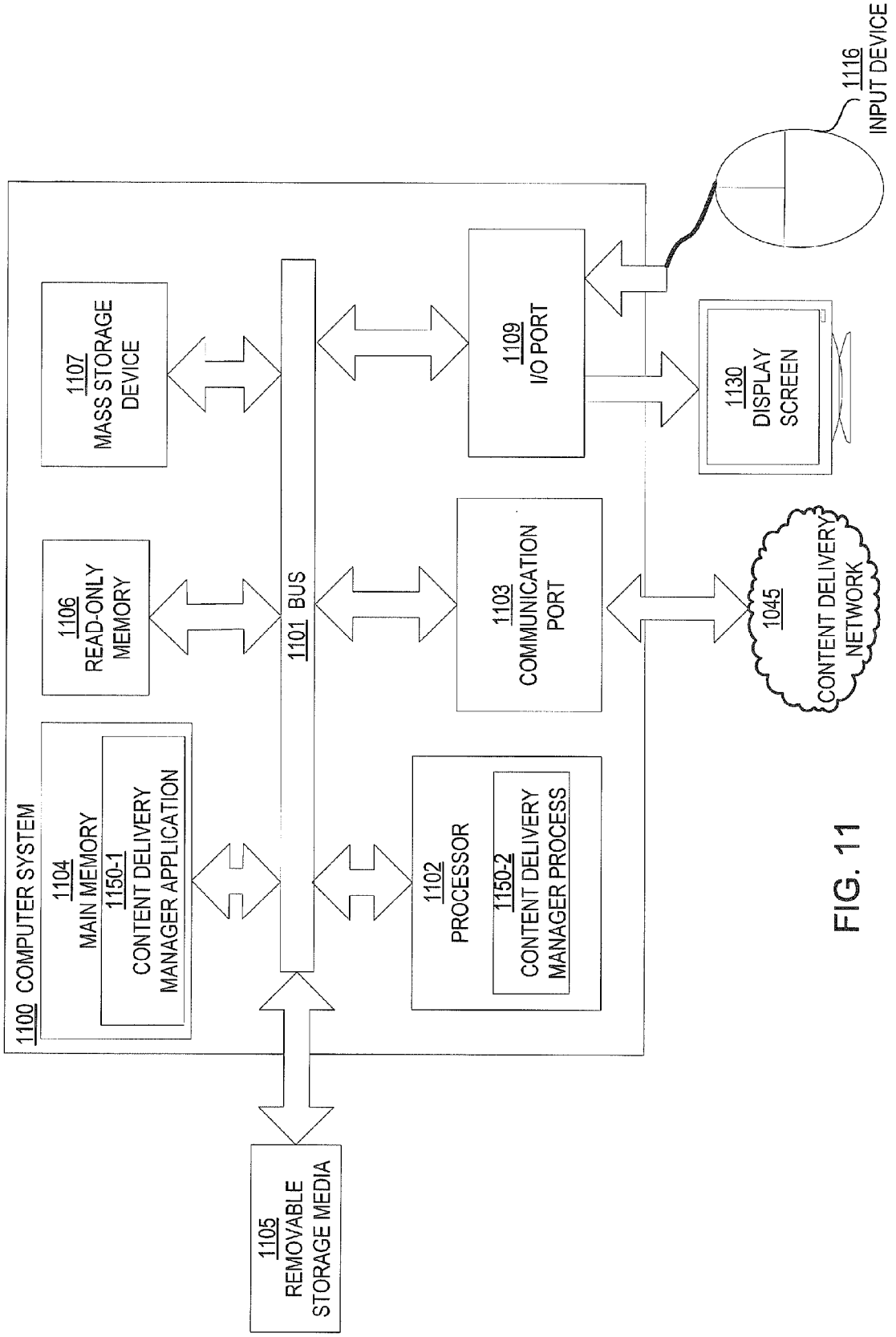
1100 COMPUTER SYSTEM
1104 MAIN MEMORY
1150-1 CONTENT DELIVERY MANAGER APPLICATION
1106 READ-ONLY MEMORY
1107 MASS STORAGE DEVICE
1101 BUS
1102 PROCESSOR
1150-2 CONTENT DELIVERY MANAGER PROCESS
1103 COMMUNICATION PORT
1109 I/O PORT
1105 REMOVABLE STORAGE MEDIA
1045 CONTENT DELIVERY NETWORK
1130 DISPLAY SCREEN
1116 INPUT DEVICE

FIG. 11

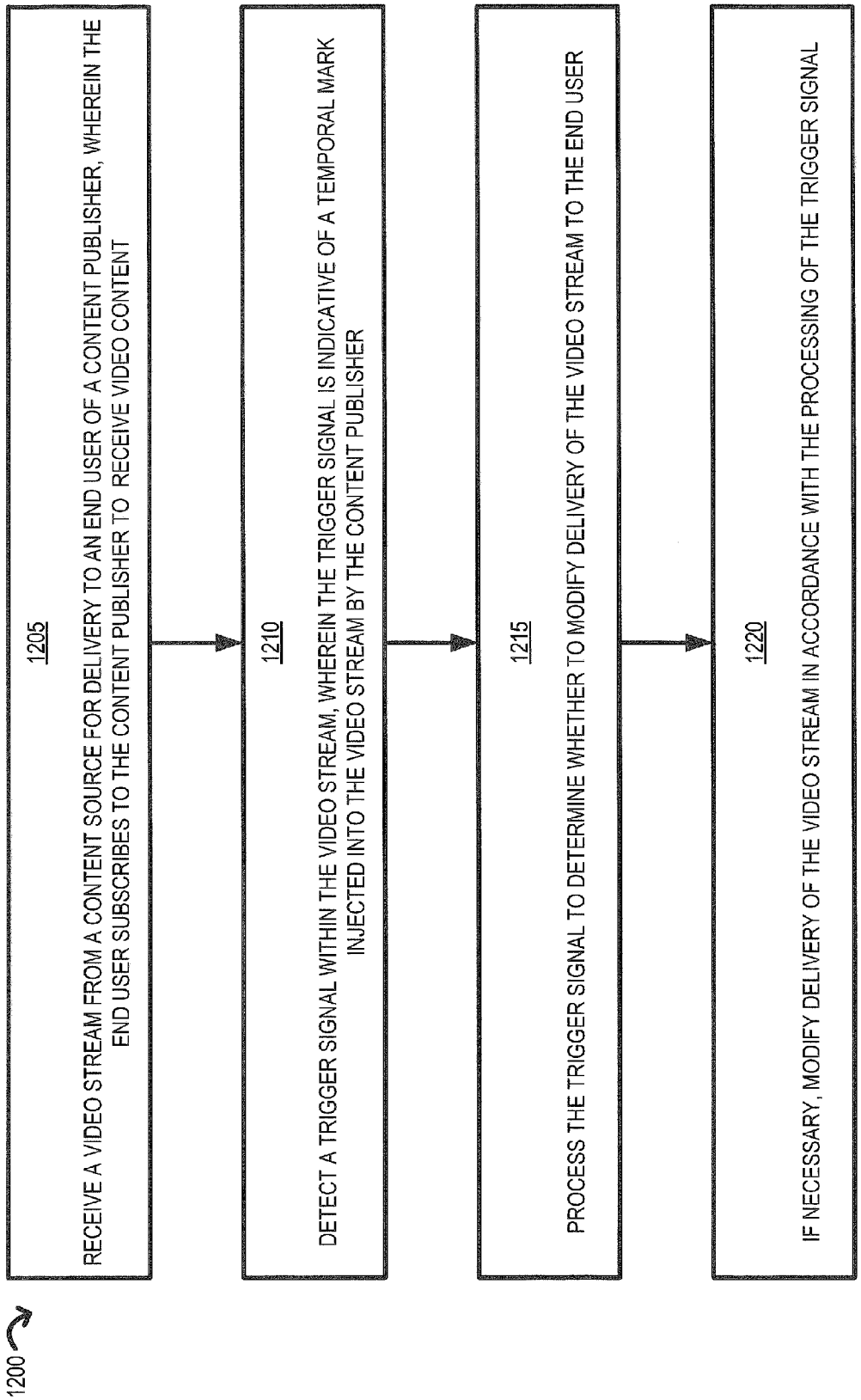
1200
1205
RECEIVE A VIDEO STREAM FROM A CONTENT SOURCE FOR DELIVERY TO AN END USER OF A CONTENT PUBLISHER, WHEREIN THE END USER SUBSCRIBES TO THE CONTENT PUBLISHER TO RECEIVE VIDEO CONTENT
1210
DETECT A TRIGGER SIGNAL WITHIN THE VIDEO STREAM, WHEREIN THE TRIGGER SIGNAL IS INDICATIVE OF A TEMPORAL MARK INJECTED INTO THE VIDEO STREAM BY THE CONTENT PUBLISHER
1215
PROCESS THE TRIGGER SIGNAL TO DETERMINE WHETHER TO MODIFY DELIVERY OF THE VIDEO STREAM TO THE END USER
1220
IF NECESSARY, MODIFY DELIVERY OF THE VIDEO STREAM IN ACCORDANCE WITH THE PROCESSING OF THE TRIGGER SIGNAL

FIG. 12

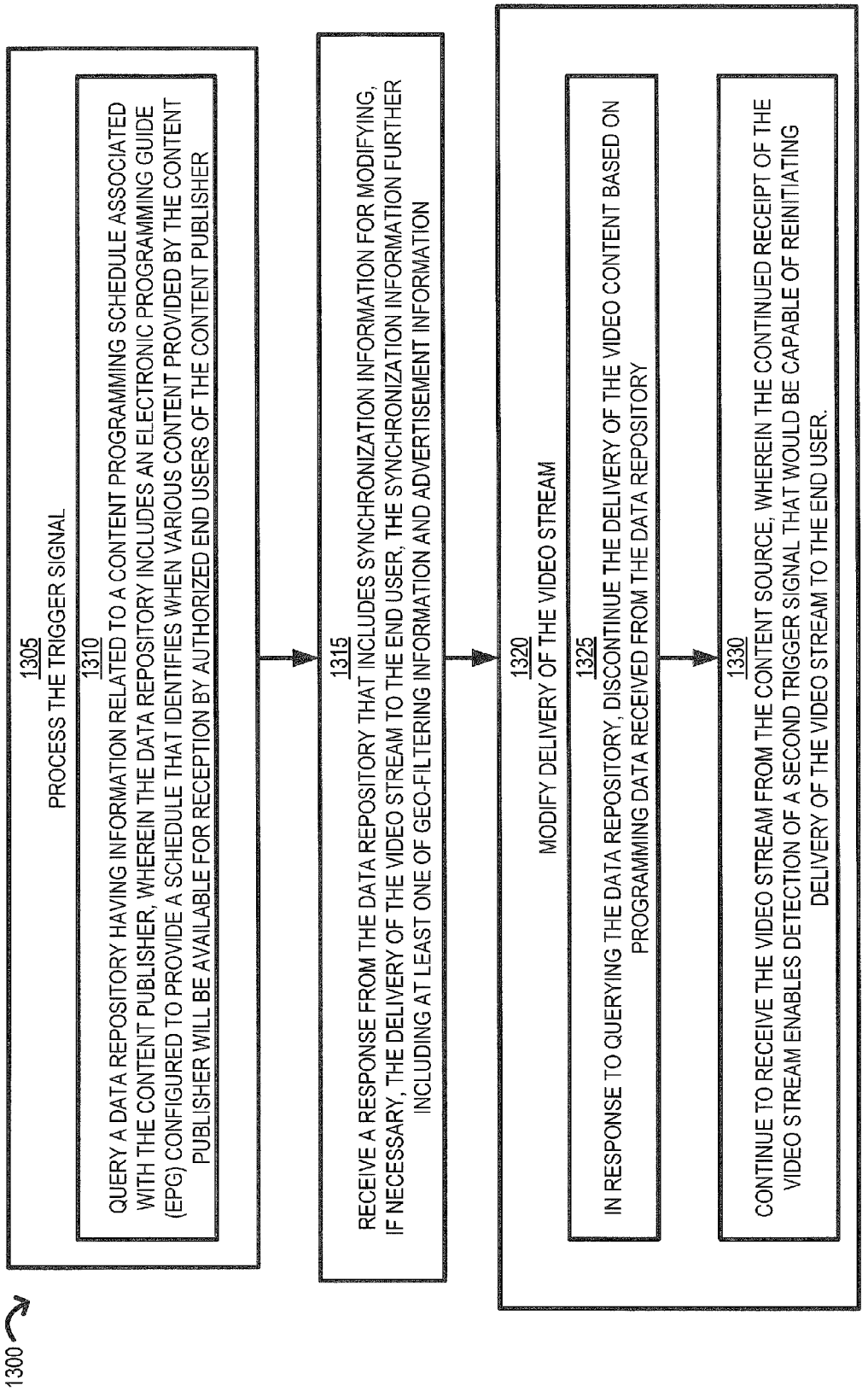
1300
1305
PROCESS THE TRIGGER SIGNAL
1310
QUERY A DATA REPOSITORY HAVING INFORMATION RELATED TO A CONTENT PROGRAMMING SCHEDULE ASSOCIATED WITH THE CONTENT PUBLISHER, WHEREIN THE DATA REPOSITORY INCLUDES AN ELECTRONIC PROGRAMMING GUIDE (EPG) CONFIGURED TO PROVIDE A SCHEDULE THAT IDENTIFIES WHEN VARIOUS CONTENT PROVIDED BY THE CONTENT PUBLISHER WILL BE AVAILABLE FOR RECEPTION BY AUTHORIZED END USERS OF THE CONTENT PUBLISHER
1315
RECEIVE A RESPONSE FROM THE DATA REPOSITORY THAT INCLUDES SYNCHRONIZATION INFORMATION FOR MODIFYING, IF NECESSARY, THE DELIVERY OF THE VIDEO STREAM TO THE END USER, THE SYNCHRONIZATION INFORMATION FURTHER INCLUDING AT LEAST ONE OF GEO-FILTERING INFORMATION AND ADVERTISEMENT INFORMATION
1320
MODIFY DELIVERY OF THE VIDEO STREAM
1325
IN RESPONSE TO QUERYING THE DATA REPOSITORY, DISCONTINUE THE DELIVERY OF THE VIDEO CONTENT BASED ON PROGRAMMING DATA RECEIVED FROM THE DATA REPOSITORY
1330
CONTINUE TO RECEIVE THE VIDEO STREAM FROM THE CONTENT SOURCE, WHEREIN THE CONTINUED RECEIPT OF THE VIDEO STREAM ENABLES DETECTION OF A SECOND TRIGGER SIGNAL THAT WOULD BE CAPABLE OF REINITIATING DELIVERY OF THE VIDEO STREAM TO THE END USER.

FIG. 13

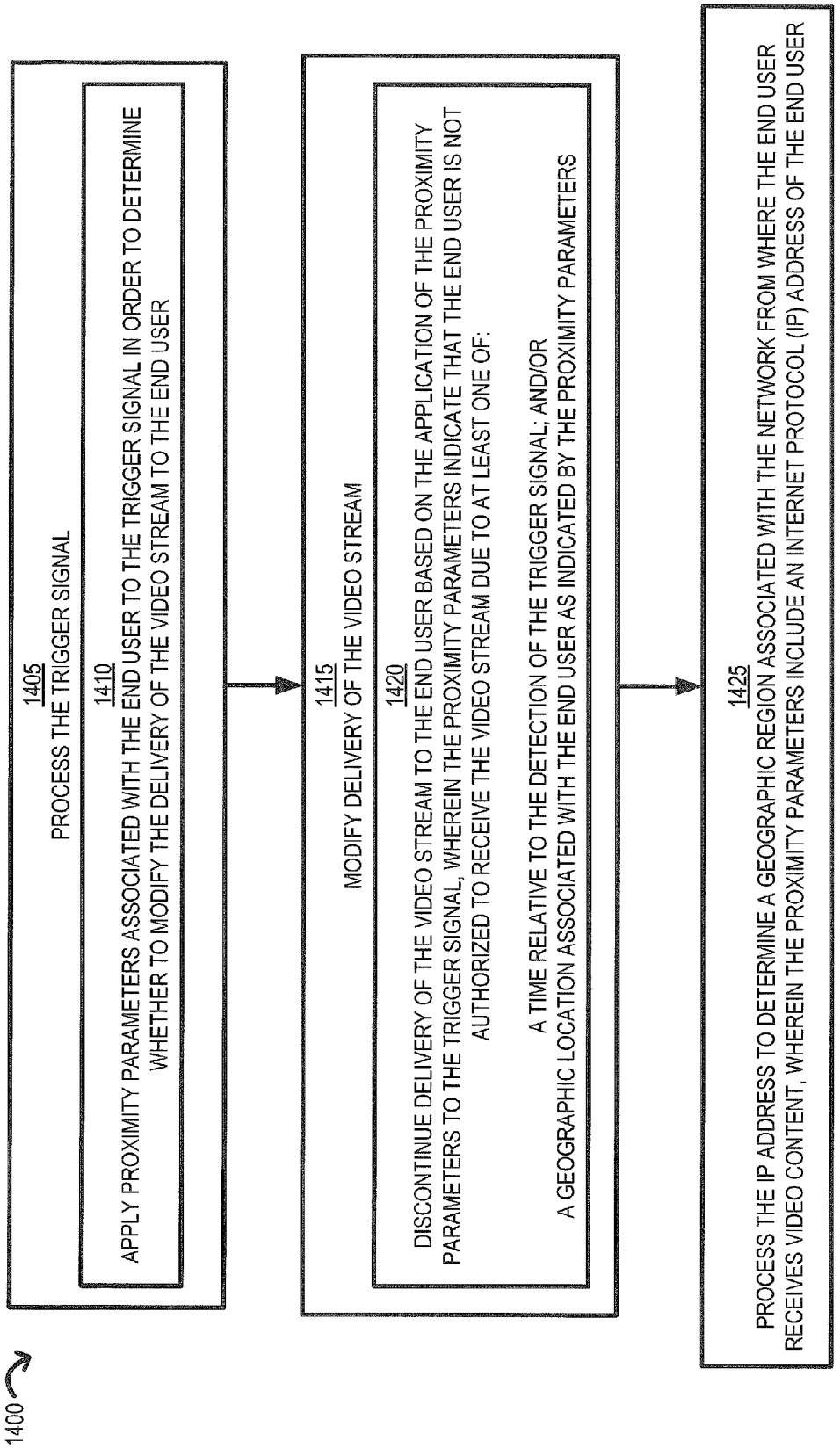
1400
1405
PROCESS THE TRIGGER SIGNAL
1410
APPLY PROXIMITY PARAMETERS ASSOCIATED WITH THE END USER TO THE TRIGGER SIGNAL IN ORDER TO DETERMINE WHETHER TO MODIFY THE DELIVERY OF THE VIDEO STREAM TO THE END USER
1415
MODIFY DELIVERY OF THE VIDEO STREAM
1420
DISCONTINUE DELIVERY OF THE VIDEO STREAM TO THE END USER BASED ON THE APPLICATION OF THE PROXIMITY PARAMETERS TO THE TRIGGER SIGNAL, WHEREIN THE PROXIMITY PARAMETERS INDICATE THAT THE END USER IS NOT AUTHORIZED TO RECEIVE THE VIDEO STREAM DUE TO AT LEAST ONE OF:
A TIME RELATIVE TO THE DETECTION OF THE TRIGGER SIGNAL; AND/OR
A GEOGRAPHIC LOCATION ASSOCIATED WITH THE END USER AS INDICATED BY THE PROXIMITY PARAMETERS
1425
PROCESS THE IP ADDRESS TO DETERMINE A GEOGRAPHIC REGION ASSOCIATED WITH THE NETWORK FROM WHERE THE END USER RECEIVES VIDEO CONTENT, WHEREIN THE PROXIMITY PARAMETERS INCLUDE AN INTERNET PROTOCOL (IP) ADDRESS OF THE END USER

FIG. 14

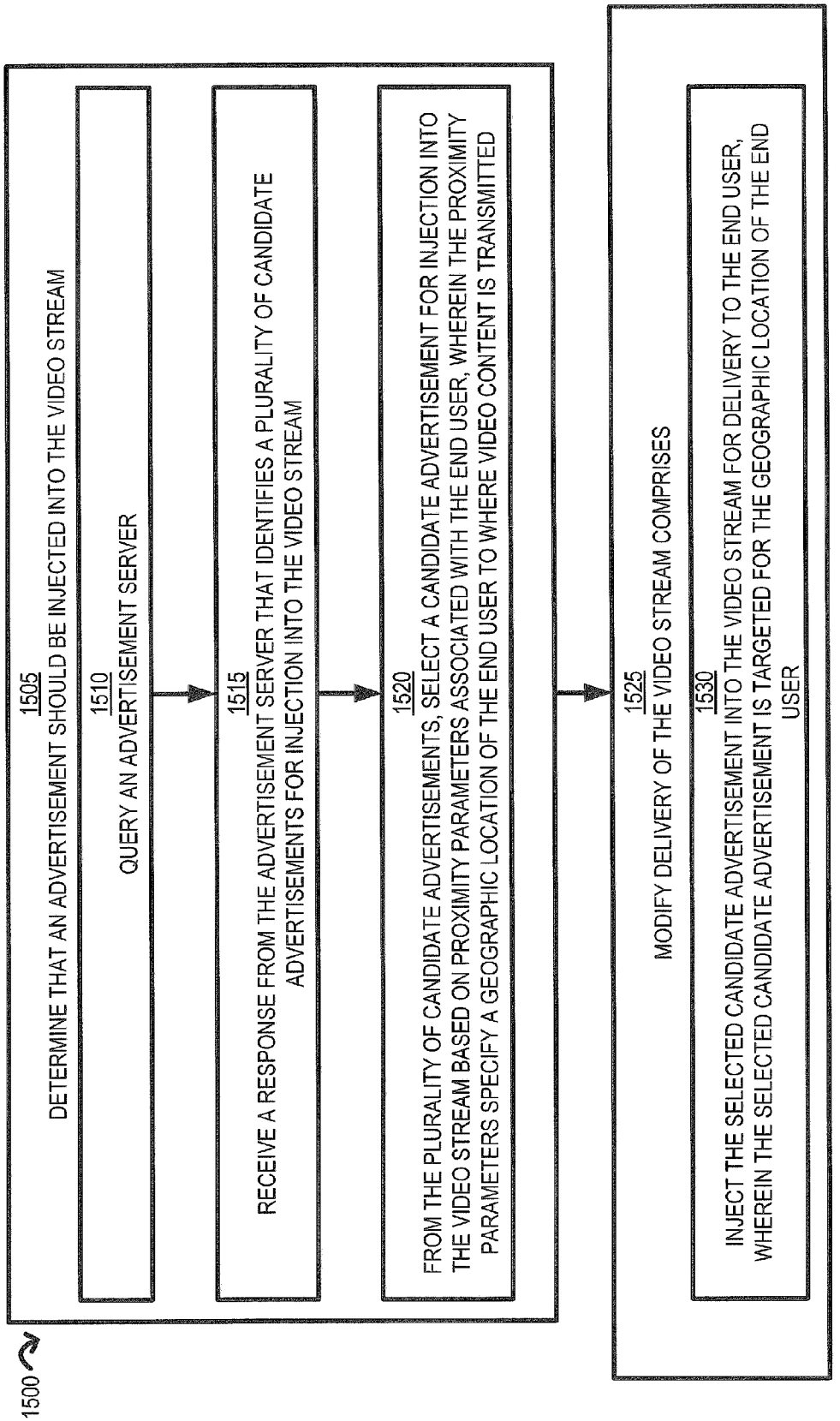
1500
1505
DETERMINE THAT AN ADVERTISEMENT SHOULD BE INJECTED INTO THE VIDEO STREAM
1510
QUERY AN ADVERTISEMENT SERVER
1515
RECEIVE A RESPONSE FROM THE ADVERTISEMENT SERVER THAT IDENTIFIES A PLURALITY OF CANDIDATE ADVERTISEMENTS FOR INJECTION INTO THE VIDEO STREAM
1520
FROM THE PLURALITY OF CANDIDATE ADVERTISEMENTS, SELECT A CANDIDATE ADVERTISEMENT FOR INJECTION INTO THE VIDEO STREAM BASED ON PROXIMITY PARAMETERS ASSOCIATED WITH THE END USER, WHEREIN THE PROXIMITY PARAMETERS SPECIFY A GEOGRAPHIC LOCATION OF THE END USER TO WHERE VIDEO CONTENT IS TRANSMITTED
1525
MODIFY DELIVERY OF THE VIDEO STREAM COMPRISES
1530
INJECT THE SELECTED CANDIDATE ADVERTISEMENT INTO THE VIDEO STREAM FOR DELIVERY TO THE END USER, WHEREIN THE SELECTED CANDIDATE ADVERTISEMENT IS TARGETED FOR THE GEOGRAPHIC LOCATION OF THE END USER

FIG. 15

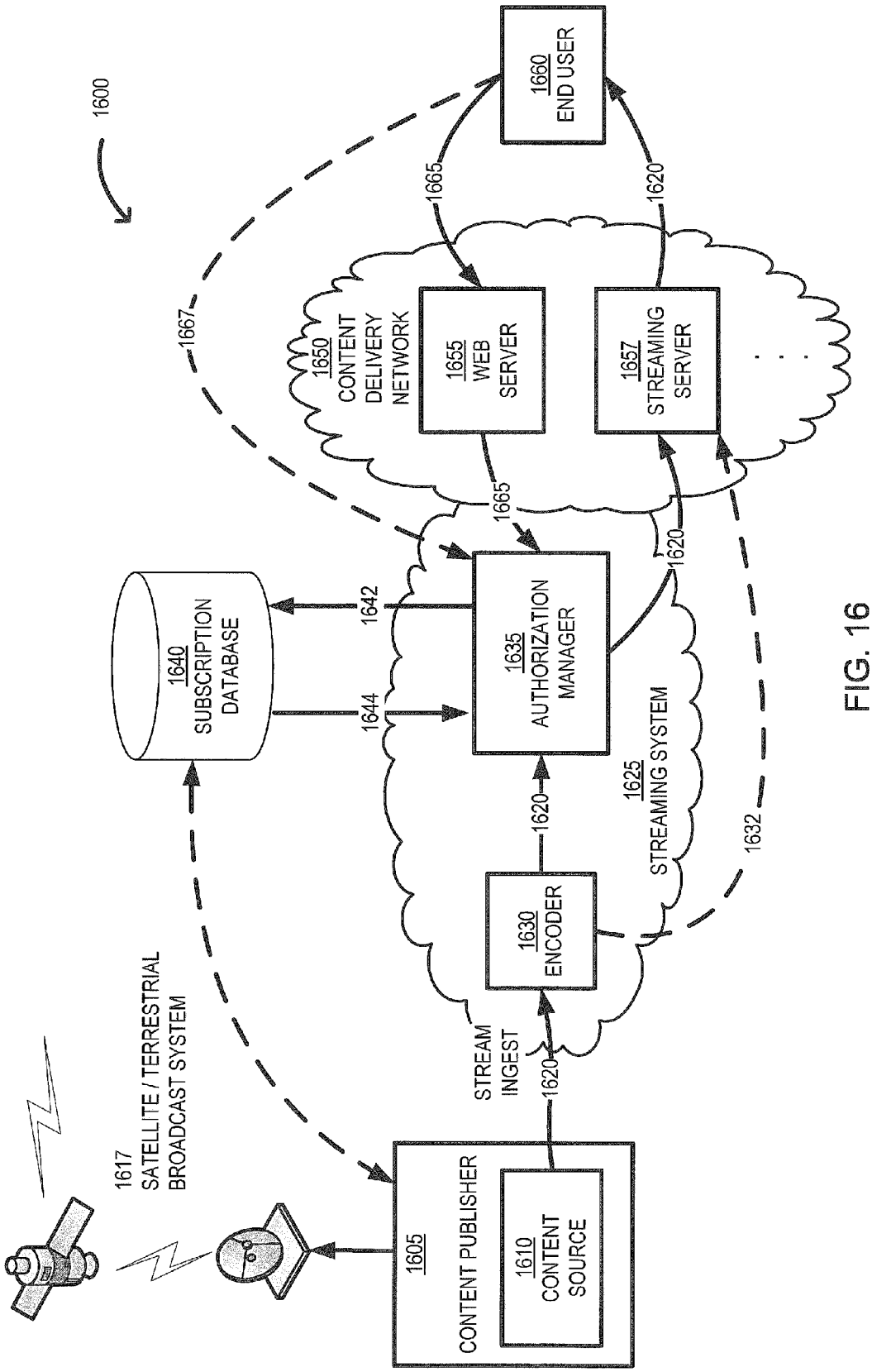
1600
1660
END USER
1665
1620
1667
1650
CONTENT
DELIVERY
NETWORK
1655
WEB
SERVER
1657
STREAMING
SERVER
1665
1620
1640
SUBSCRIPTION
DATABASE
1642
1644
1635
AUTHORIZATION
MANAGER
1625
STREAMING SYSTEM
1620
1632
1630
ENCODER
1617
SATELLITE / TERRESTRIAL
BROADCAST SYSTEM
STREAM
INGEST
1620
1605
CONTENT PUBLISHER
1610
CONTENT
SOURCE

FIG. 16

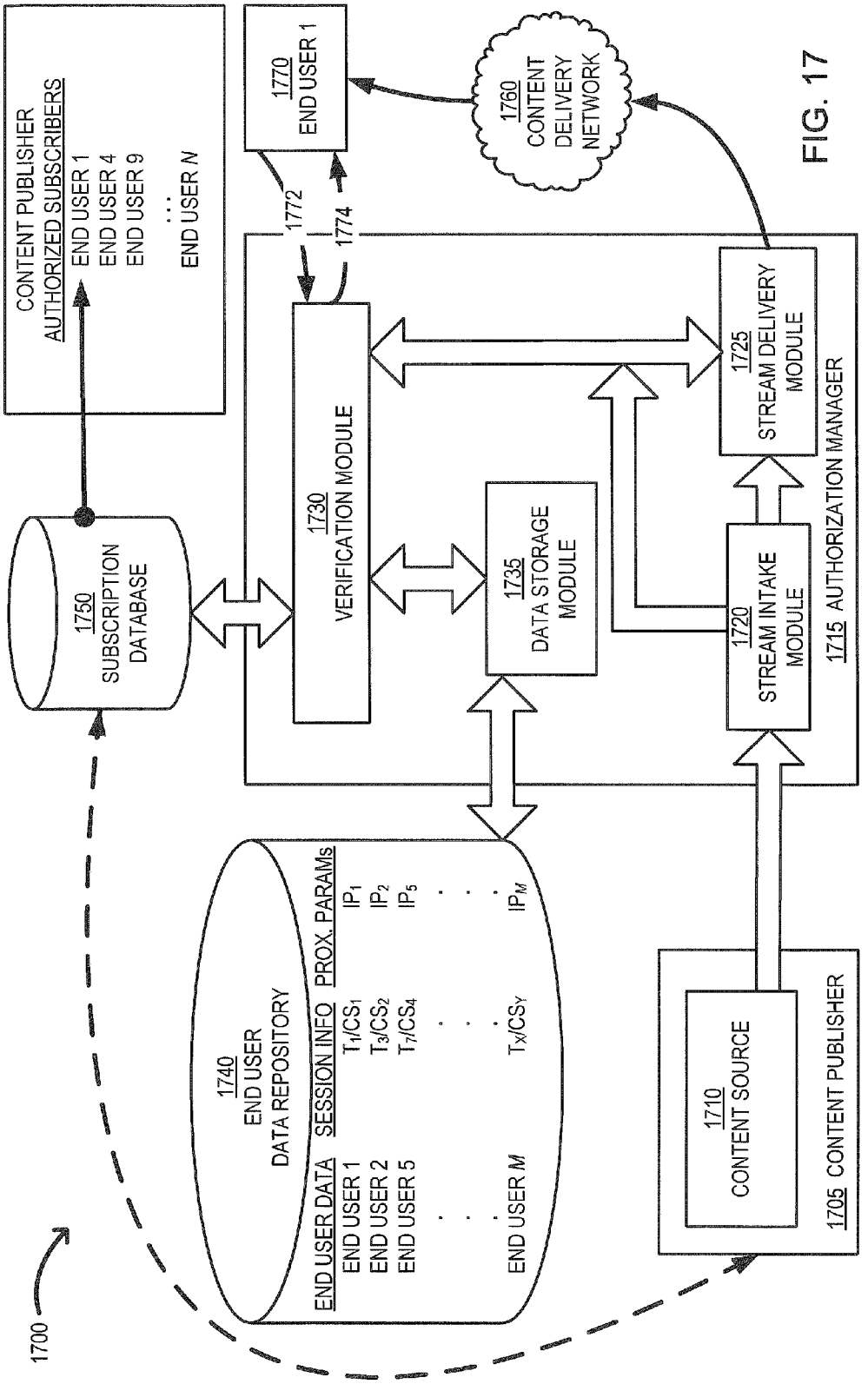
CONTENT PUBLISHER
AUTHORIZED SUBSCRIBERS
END USER 1
END USER 4
END USER 9
...
END USER N
1750 SUBSCRIPTION DATABASE
1770 END USER 1
1772
1774
1760 CONTENT DELIVERY NETWORK
1730 VERIFICATION MODULE
1735 DATA STORAGE MODULE
1725 STREAM DELIVERY MODULE
1720 STREAM INTAKE MODULE
1715 AUTHORIZATION MANAGER
1740 END USER DATA REPOSITORY
END USER DATA
SESSION INFO
PROX. PARAMs
END USER 1 T1/CS1 IP1
END USER 2 T3/CS2 IP2
END USER 5 T7/CS4 IP5
END USER M TX/CSY IPM
1710 CONTENT SOURCE
1705 CONTENT PUBLISHER
1700

FIG. 17

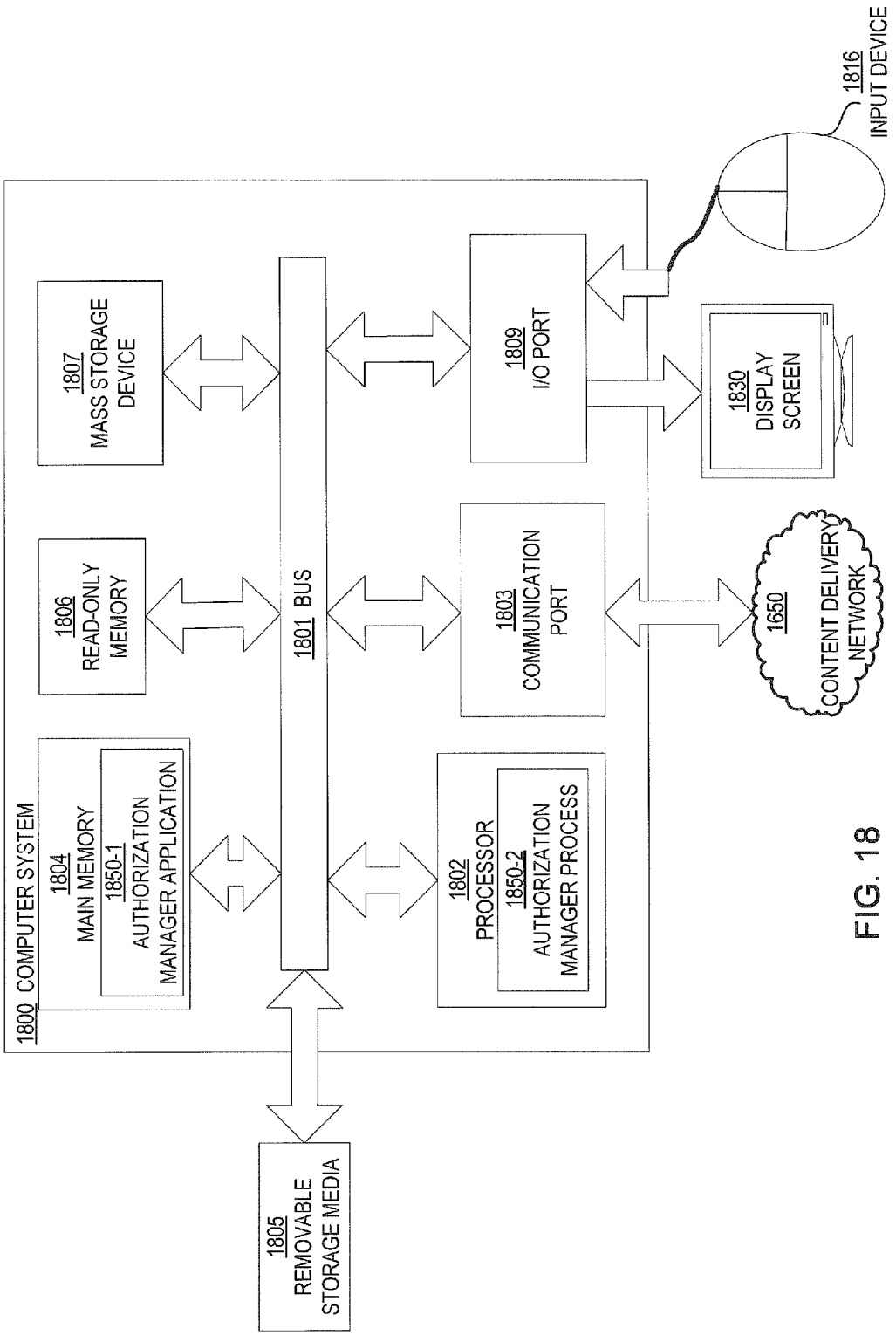
1800 COMPUTER SYSTEM
1804 MAIN MEMORY
1850-1 AUTHORIZATION MANAGER APPLICATION
1806 READ-ONLY MEMORY
1807 MASS STORAGE DEVICE
1801 BUS
1802 PROCESSOR
1850-2 AUTHORIZATION MANAGER PROCESS
1803 COMMUNICATION PORT
1809 I/O PORT
1805 REMOVABLE STORAGE MEDIA
1650 CONTENT DELIVERY NETWORK
1830 DISPLAY SCREEN
1816 INPUT DEVICE

FIG. 18

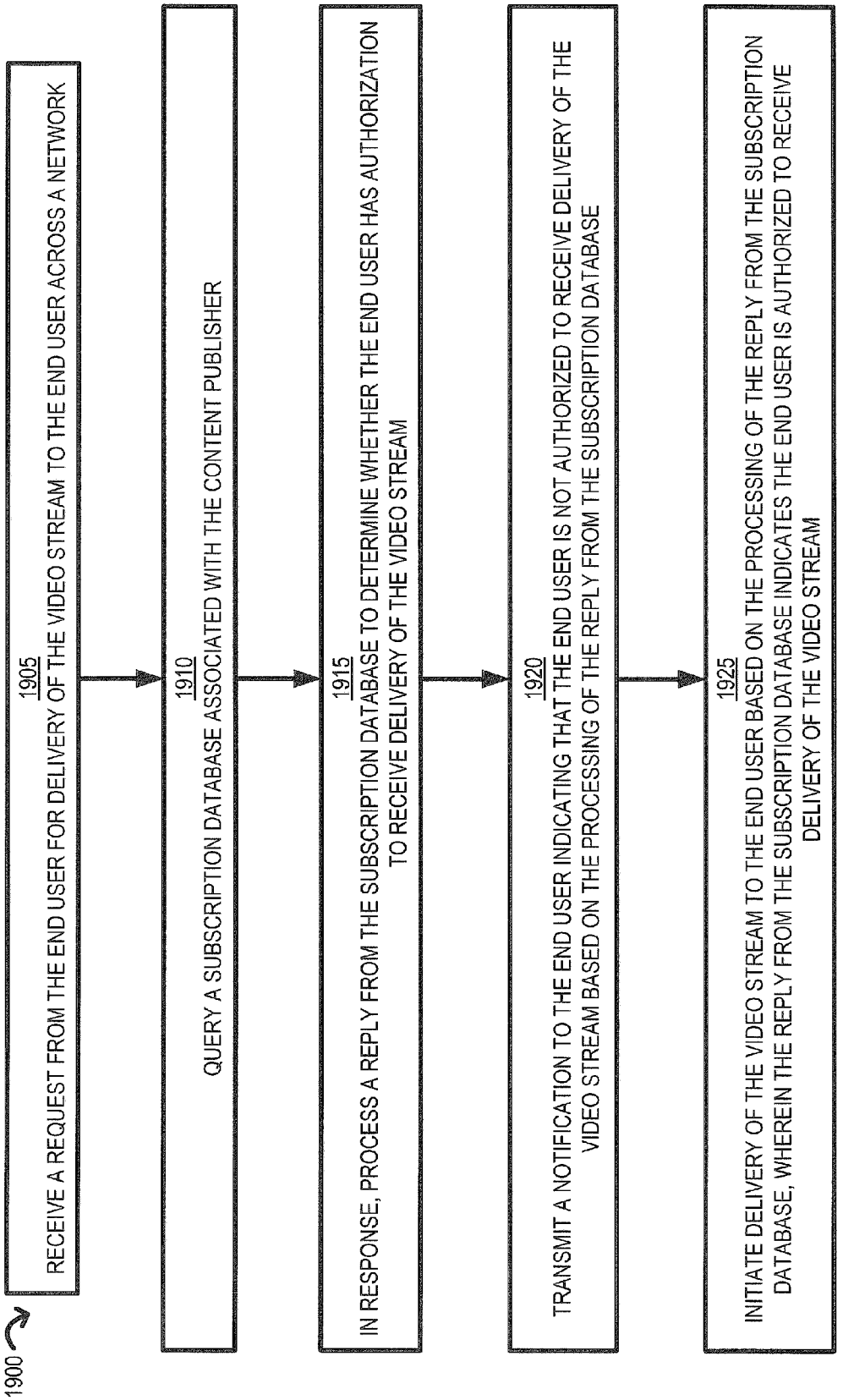
1900
1905
RECEIVE A REQUEST FROM THE END USER FOR DELIVERY OF THE VIDEO STREAM TO THE END USER ACROSS A NETWORK
1910
QUERY A SUBSCRIPTION DATABASE ASSOCIATED WITH THE CONTENT PUBLISHER
1915
IN RESPONSE, PROCESS A REPLY FROM THE SUBSCRIPTION DATABASE TO DETERMINE WHETHER THE END USER HAS AUTHORIZATION TO RECEIVE DELIVERY OF THE VIDEO STREAM
1920
TRANSMIT A NOTIFICATION TO THE END USER INDICATING THAT THE END USER IS NOT AUTHORIZED TO RECEIVE DELIVERY OF THE VIDEO STREAM BASED ON THE PROCESSING OF THE REPLY FROM THE SUBSCRIPTION DATABASE
1925
INITIATE DELIVERY OF THE VIDEO STREAM TO THE END USER BASED ON THE PROCESSING OF THE REPLY FROM THE SUBSCRIPTION DATABASE, WHEREIN THE REPLY FROM THE SUBSCRIPTION DATABASE INDICATES THE END USER IS AUTHORIZED TO RECEIVE DELIVERY OF THE VIDEO STREAM

FIG. 19

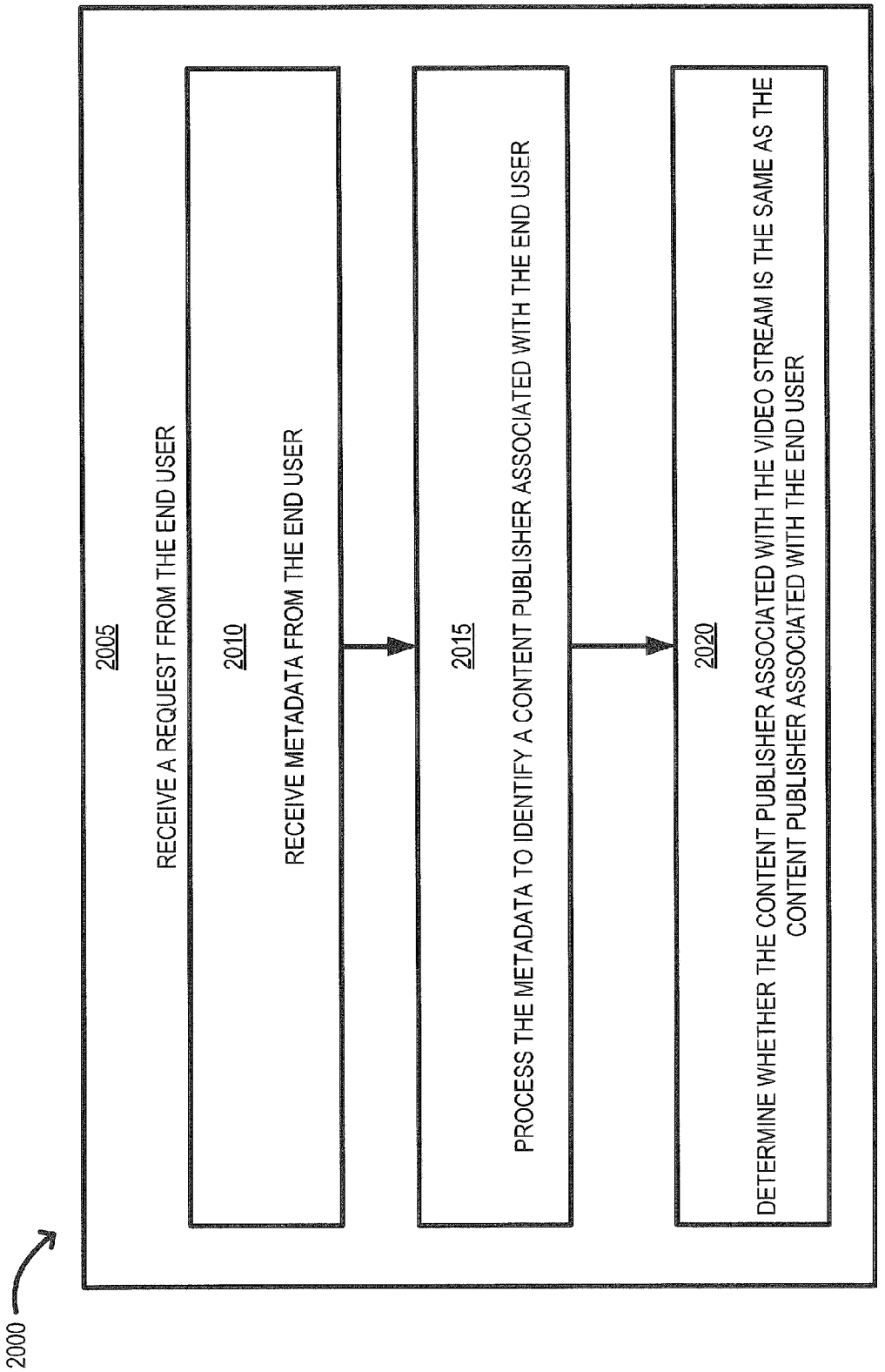
2000
2005
RECEIVE A REQUEST FROM THE END USER
2010
RECEIVE METADATA FROM THE END USER
2015
PROCESS THE METADATA TO IDENTIFY A CONTENT PUBLISHER ASSOCIATED WITH THE END USER
2020
DETERMINE WHETHER THE CONTENT PUBLISHER ASSOCIATED WITH THE VIDEO STREAM IS THE SAME AS THE CONTENT PUBLISHER ASSOCIATED WITH THE END USER

FIG. 20

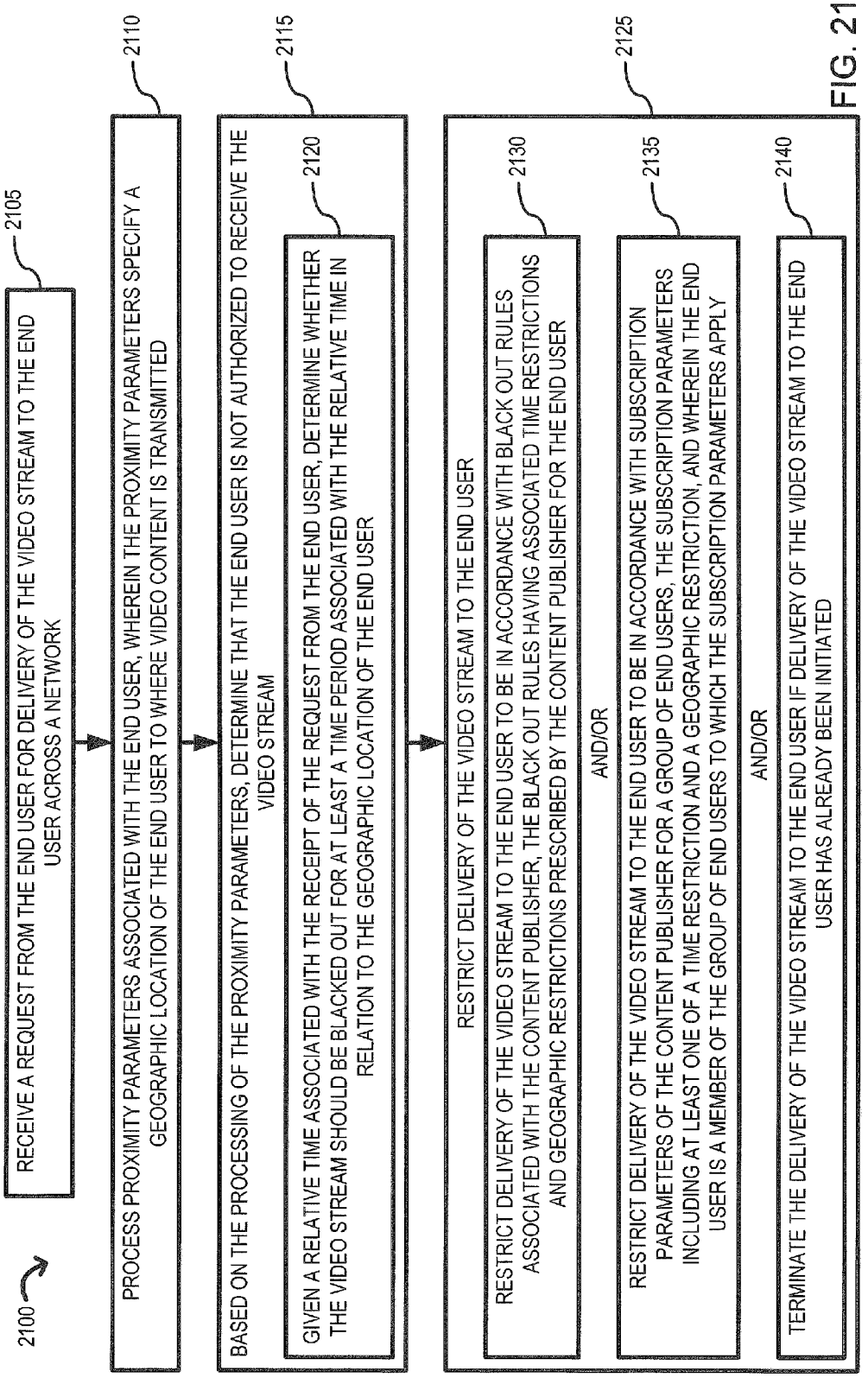
2100
2105
RECEIVE A REQUEST FROM THE END USER FOR DELIVERY OF THE VIDEO STREAM TO THE END USER ACROSS A NETWORK
2110
PROCESS PROXIMITY PARAMETERS ASSOCIATED WITH THE END USER, WHEREIN THE PROXIMITY PARAMETERS SPECIFY A GEOGRAPHIC LOCATION OF THE END USER TO WHERE VIDEO CONTENT IS TRANSMITTED
2115
BASED ON THE PROCESSING OF THE PROXIMITY PARAMETERS, DETERMINE THAT THE END USER IS NOT AUTHORIZED TO RECEIVE THE VIDEO STREAM
2120
GIVEN A RELATIVE TIME ASSOCIATED WITH THE RECEIPT OF THE REQUEST FROM THE END USER, DETERMINE WHETHER THE VIDEO STREAM SHOULD BE BLACKED OUT FOR AT LEAST A TIME PERIOD ASSOCIATED WITH THE RELATIVE TIME IN RELATION TO THE GEOGRAPHIC LOCATION OF THE END USER
2125
RESTRICT DELIVERY OF THE VIDEO STREAM TO THE END USER
2130
RESTRICT DELIVERY OF THE VIDEO STREAM TO THE END USER TO BE IN ACCORDANCE WITH BLACK OUT RULES ASSOCIATED WITH THE CONTENT PUBLISHER, THE BLACK OUT RULES HAVING ASSOCIATED TIME RESTRICTIONS AND GEOGRAPHIC RESTRICTIONS PRESCRIBED BY THE CONTENT PUBLISHER FOR THE END USER
AND/OR
2135
RESTRICT DELIVERY OF THE VIDEO STREAM TO THE END USER TO BE IN ACCORDANCE WITH SUBSCRIPTION PARAMETERS OF THE CONTENT PUBLISHER FOR A GROUP OF END USERS, THE SUBSCRIPTION PARAMETERS INCLUDING AT LEAST ONE OF A TIME RESTRICTION AND A GEOGRAPHIC RESTRICTION, AND WHEREIN THE END USER IS A MEMBER OF THE GROUP OF END USERS TO WHICH THE SUBSCRIPTION PARAMETERS APPLY
AND/OR
2140
TERMINATE THE DELIVERY OF THE VIDEO STREAM TO THE END USER IF DELIVERY OF THE VIDEO STREAM TO THE END USER HAS ALREADY BEEN INITIATED

FIG. 21

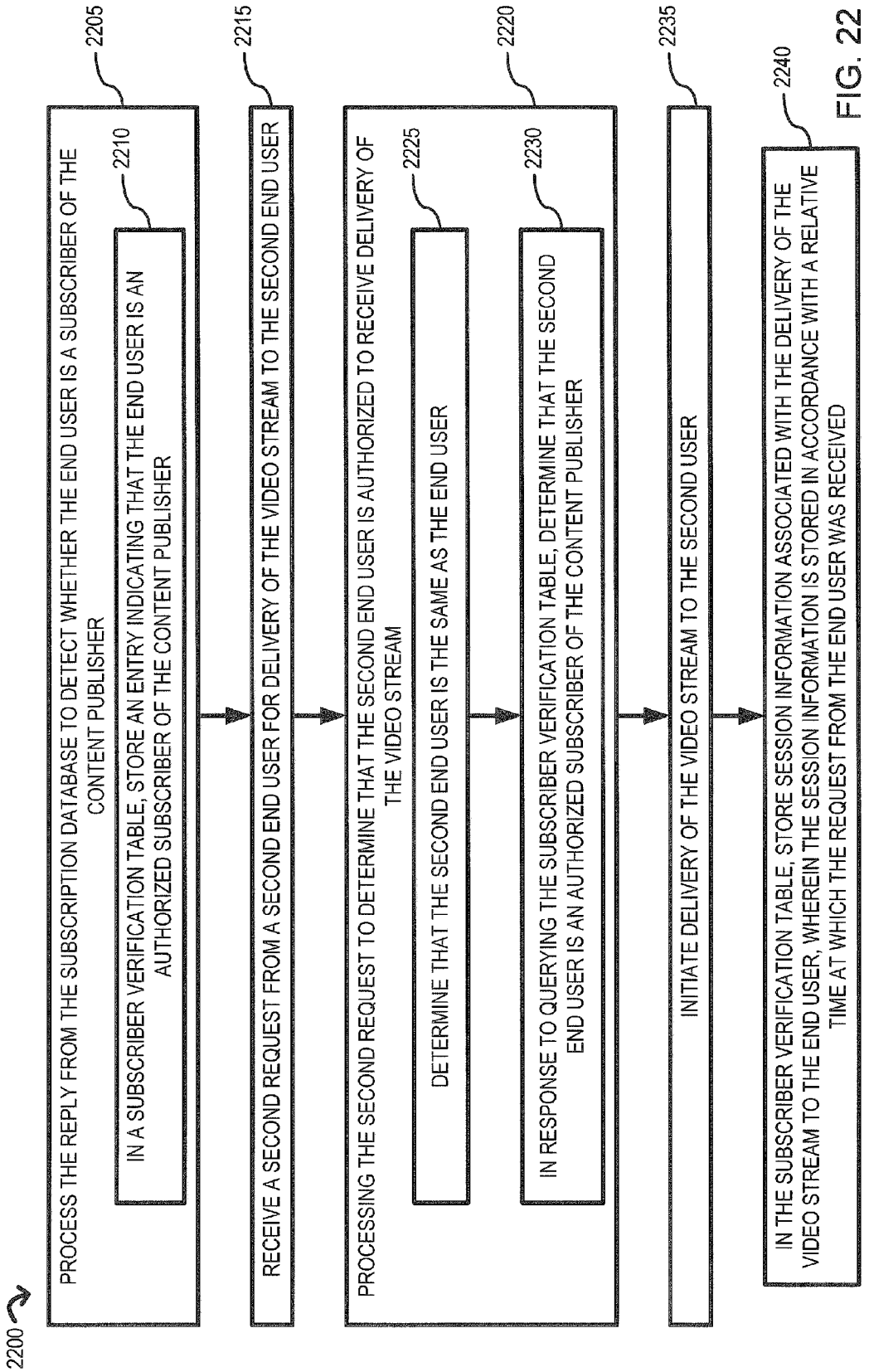
2200
2205
PROCESS THE REPLY FROM THE SUBSCRIPTION DATABASE TO DETECT WHETHER THE END USER IS A SUBSCRIBER OF THE CONTENT PUBLISHER
2210
IN A SUBSCRIBER VERIFICATION TABLE, STORE AN ENTRY INDICATING THAT THE END USER IS AN AUTHORIZED SUBSCRIBER OF THE CONTENT PUBLISHER
2215
RECEIVE A SECOND REQUEST FROM A SECOND END USER FOR DELIVERY OF THE VIDEO STREAM TO THE SECOND END USER
2220
PROCESSING THE SECOND REQUEST TO DETERMINE THAT THE SECOND END USER IS AUTHORIZED TO RECEIVE DELIVERY OF THE VIDEO STREAM
2225
DETERMINE THAT THE SECOND END USER IS THE SAME AS THE END USER
2230
IN RESPONSE TO QUERYING THE SUBSCRIBER VERIFICATION TABLE, DETERMINE THAT THE SECOND END USER IS AN AUTHORIZED SUBSCRIBER OF THE CONTENT PUBLISHER
2235
INITIATE DELIVERY OF THE VIDEO STREAM TO THE SECOND USER
2240
IN THE SUBSCRIBER VERIFICATION TABLE, STORE SESSION INFORMATION ASSOCIATED WITH THE DELIVERY OF THE VIDEO STREAM TO THE END USER, WHEREIN THE SESSION INFORMATION IS STORED IN ACCORDANCE WITH A RELATIVE TIME AT WHICH THE REQUEST FROM THE END USER WAS RECEIVED

FIG. 22

USER AUTHENTICATION IN A CONTENT DELIVERY NETWORK

RELATED APPLICATIONS

This application claims the benefit of commonly owned U.S. Provisional Application No. 61/113,941, filed Nov. 12, 2008, entitled "Content Delivery Management and Administration", which is incorporated by reference in its entirety for all purposes. This application is related to concurrently-filed and commonly owned U.S. Non-Provisional Application Ser. No. 12/604,518, filed Oct. 23, 2009, entitled "Dynamic Processing of Streamed Content," which is incorporated by reference in its entirety for all purposes.

TECHNICAL FIELD

Embodiments presently disclosed generally relate to network communications. More specifically, embodiments herein relate to distributing and serving various media and content resources across a content delivery network.

BACKGROUND OF THE INVENTION

The Internet has enabled a proliferation of information to become available to end users across a myriad of different heterogeneous networks. Users of the Internet enjoy the ability to quickly access various types of multimedia (e.g., audio, video, games, etc.) for viewing and playback on their devices (e.g., PCs, laptops, mobile phones, etc.). Various streaming protocols and procedures are used to deliver multimedia in a real-time, or near-real time fashion, such that a user may interact with the media (e.g., watch a video) while the media is simultaneously being distributed over one or more networks.

All media is not freely available however. Many content providers and publishers wish to protect and/or monetize their media assets when providing such content over the Internet. For example, various digital rights management policies (e.g., encryption/decryption) have been established to protect media assets of content providers and publishers. Automated e-commerce technologies have also been deployed so that content providers and publishers can conveniently monetize the various media content being distributed to end users.

SUMMARY OF THE INVENTION

Embodiments generally disclosed herein include computer-implemented methods for delivery of video content across a network. Such methods comprise a content delivery manager capable of receiving a video stream from a content source for delivery to a client of a content publisher. According to an example configuration, the client subscribes to the content publisher to receive video content. The content delivery manager is capable of detecting a trigger signal within the video stream. For example, the trigger signal can indicate a temporal mark injected into the video stream by the content publisher.

During general operation, the content delivery manager processes the trigger signal to determine whether to modify delivery of the video stream to the client. If necessary, the content delivery manager modifies delivery of the video stream in accordance with the processing of the trigger signal.

According to another general embodiment, a computer-implemented method is provided for authorizing delivery of a video stream to an end user. As such, the video stream is associated with a content publisher. The method comprises an

authorization manager capable of receiving a request from the end user for delivery of the video stream to the end user across a network.

In operation, the authorization manager queries a subscription database associated with the content publisher. In response to the query, the authorization manager processes a reply from the subscription database to determine whether the end user has authorization to receive delivery of the video stream.

According to one example embodiment, if it is determined (per the reply from the subscription database) that the end user is not authorized to receive delivery of the video stream from the content publisher, the authorization manager transmits a notification to the end user indicating that the end user is not authorized to receive delivery of the video stream based on the processing of the reply from the subscription database.

In another example embodiment, if it is determined (per the reply from the subscription database) that the end user is authorized to receive delivery of the video stream from the content publisher, the authorization manager initiates delivery of the video stream to the end user based on the processing of the reply from the subscription database.

BRIEF DESCRIPTION OF DRAWINGS

The foregoing and other objects, features and advantages of the invention will be apparent from the following description of particular embodiments of the invention, as illustrated in the accompanying drawings in which like reference characters refer to the same parts throughout the different views. The drawings are not necessarily to scale, emphasis instead being placed upon illustrating the principles of the invention.

FIG. **1** is a block diagram depicting an Internet broadcast system for streaming media constructed in accordance with an example embodiment.

FIG. **2** is a block diagram depicting a media serving system constructed in accordance with an example embodiment.

FIG. **3** is a block diagram depicting a data center constructed in accordance with an example embodiment.

FIG. **4** illustrates a data flow in a Internet broadcast system for streaming media constructed in accordance with an example embodiment.

FIGS. **5**, **6** and **7** are block diagrams depicting acquisition, broadcasting and reception phases employed in a Internet broadcast system for streaming media constructed in accordance with an example embodiment.

FIG. **8** is a block diagram depicting transport data management in a Internet broadcast system for streaming media constructed in accordance with an example embodiment.

FIG. **9** is a block diagram of a network environment for providing content delivery management and administration in accordance with an example embodiment.

FIG. **10** is a block diagram of a network environment for providing content delivery management and administration in accordance with an example embodiment.

FIG. **11** is a flow chart that shows processing operations performed by a content delivery manager in accordance with an example embodiment.

FIG. **12** is a block diagram of a computer system suitable for performing content delivery management and administration in accordance with an example embodiment.

FIG. **13** is a flow chart that shows processing operations performed by a content delivery manager in accordance with an example embodiment

FIG. **14** is a flow chart that shows processing operations performed by a content delivery manager in accordance with an example embodiment

FIG. **15** is a flow chart that shows processing operations performed by a content delivery manager in accordance with an example embodiment

FIG. **16** is a block diagram of a network environment for providing end user authentication and authorization in accordance with an example embodiment.

FIG. **17** is a block diagram of a network environment for providing end user authentication and authorization in accordance with an example embodiment.

FIG. **18** is a block diagram of a computer system suitable for performing end user authentication and authorization in accordance with an example embodiment.

FIG. **19** is a flow chart that shows processing operations performed by an authorization manager in accordance with an example embodiment

FIG. **20** is a flow chart that shows processing operations performed by an authorization manager in accordance with an example embodiment

FIG. **21** is a flow chart that shows processing operations performed by an authorization manager in accordance with an example embodiment

FIG. **22** is a flow chart that shows processing operations performed by an authorization manager in accordance with an example embodiment

Throughout the drawing figures, like reference numerals will be understood to refer to like parts and components.

DETAILED DESCRIPTION

System Component Overview

With reference to FIG. **1**, a system **10** is provided which captures media (e.g., using a private network), and broadcasts the media (e.g., by satellite) to servers located at the edge of the Internet, that is, where users **20** connect to the Internet such as at a local Internet service provider or ISP. The system **10** bypasses the congestion and expense associated with the Internet backbone to deliver high-fidelity streams at low cost to servers located as close to end users **20** as possible.

To maximize performance, scalability and availability, the system **10** deploys the servers in a tiered hierarchy distribution network indicated generally at **12** that can be built from different numbers and combinations of network building components comprising media serving systems **14**, regional data centers **16** and master data centers **18**. The system also comprises an acquisition network **22** that is preferably a dedicated network for obtaining media or content for distribution from different sources. The acquisition network **22** can operate as a network operations center (NOC) which manages the content to be distributed, as well as the resources for distributing it. For example, content is preferably dynamically distributed across the system network **12** in response to changing traffic patterns in accordance with the present invention. While only one master data center **18** is illustrated, it is to be understood that the system can employ multiple master data centers, or none at all and simply use regional data centers **16** and media serving systems **14**, or only media serving systems **14**.

An illustrative acquisition network **22** comprises content sources **24** such as content received from audio and/or video equipment employed at a stadium for a live broadcast via satellite **26**. The broadcast signal is provided to an encoding facility **28**. Live or simulated live broadcasts can also be rendered via stadium or studio cameras, for example, and transmitted via a terrestrial network such as a T**1**, T**3** or ISDN or other type of a dedicated network **30** that employs asynchronous transfer mode (ATM or other technology. In addition to live analog or digital signals, the content can include analog tape recordings, and digitally stored information (e.g., media-on-demand or MOD), among other types of content. Further, in addition to a dedicated link **30** or a satellite link **26**, the content harvested by the acquisition network **22** can be received via the Internet, other wireless communication links besides a satellite link, or even via shipment of storage media containing the content, among other methods. The encoding facility **28** converts raw content such as digital video into Internet-ready data in different formats such as the Microsoft Windows Media (MWM), RealNetworks G2, or Apple QuickTime (QT) formats. The system **10** also employs unique encoding methods to maximize fidelity of the audio and video signals that are delivered via multicast by the distribution network **12**.

With continued reference to FIG. **1**, the encoding facility **28** provides encoded data to the hierarchical distribution network **12** via a broadcast backbone which is preferably a point-to-multipoint distribution network. While a satellite link indicated generally at **32** is used, the broadcast backbone employed by the system **10** of the present invention is preferably a hybrid fiber-satellite transmission system that also comprises a terrestrial network **33**. The satellite link **32** is preferably dedicated and independent of a satellite link **26** employed for acquisition purposes. The tiered network building components **14**, **16** and **18** are each equipped with satellite transceivers to allow the system **10** to simultaneously deliver live streams to all server tiers **14**, **16** and **18** and rapidly update on-demand content stored at any tier. When a satellite link **32** is unavailable or impractical, however, the system **10** broadcasts live and on-demand content though fiber links provided in the hierarchical distribution network **12**. Where the feed is pulled from in case of a failure is based on a set of routing rules that include priorities, weighting, and so on. In other words, the feed is pulled in a manner similar to the way routers currently operate, but at the actual stream level.

The system **10** employs a director agent to monitor the status of all of the tiers of the distribution network **12** and redirect users **20** to the optimal server, depending on the requested content. The director agent can originate, for example, from the NOC/encoding facility **28**. The system employs an Internet Protocol or IP address map to determine where a user **20** is located and then identifies which of the tiered servers **14**, **16** and **18** can deliver the highest quality stream, depending on network performance, content location, central processing unit load for each network component, application status, among other factors. Cookies and data from other databases can also be employed to facilitate this system intelligence.

Media serving systems **14** comprise hardware and software installed in ISP facilities at the edge of the Internet. The media serving systems preferably only serve users **20** in its subnetwork. Thus, the media serving systems **14** are configured to provide the best media transmission quality possible because the end users **20** are local. A media serving system **14** is similar to an ISP caching server, except that the content served from the media serving system is controlled by the content provider that input the content into the system **10**. The media serving systems **14** each serve live streams delivered by the satellite link **32**, and store popular content such as current and/or geographically-specific news clips. Each media serving system **14** manages its storage space and deletes content that is less frequently accessed by users **20** in its subnetwork. Content that is not stored at the media serving system **14** can be served from regional data centers.

With reference to FIG. **2**, a media serving system **14** comprises an input **40** from a satellite and/or terrestrial signal transceiver **43**. The media serving system **14** can output con-

tent to users **20** in its subnetwork or control/feedback signals for transmission to the NOC or another hierarchical component in the system **10** via a wireline or wireless communication network. The media serving system **14** has a central processing unit **42** and a local storage device **44**. A file transport module **136** and a transport receiver **144**, which are described below with reference to FIG. **7**, are provided to facilitate reception of content from the broadcast backbone. The media serving system **14** also preferably comprises one or more of an HTTP/Proxy server **46**, a Real server **48**, a QT server **50** and a WMS server **52** to provide content to users **20** in a selected format. The media serving system can also support Windows and Real caching servers, allowing direct connections to a local box regardless of whether the content is available. The content in the network **12** is then located and cached locally for playback. This allows for split live feeds by a local media serving system **14** regardless of whether is being sent via a broadcast or feed mechanism. Thus, pull splits from a media serving system **14** are supported, as well as broadcast streams that are essentially push splits with forward caching.

The regional data centers **16** are located at strategic points around the Internet backbone. With reference to FIG. **3**, a regional data center **16** comprises a satellite and/or terrestrial signal transceiver, indicated at **61** and **63**, to receive inputs and to output content to users **20** or control/feedback signals for transmission to the NOC or another hierarchical component in the system **10** via wireline or wireless communication network. A regional data center **16** preferably has more hardware than a media serving system **14** such as gigabit routers and load-balancing switches **66** and **68**, along with high-capacity servers (e.g., plural media serving systems **14**) and a storage device **62**. The CPU **60** and host **64** are operable to facilitate storage and delivery of less frequently accessed on-demand content using the servers **14** and switches **66** and **68**. The regional data centers **16** also deliver content if a standalone media serving system **14** is not available to a particular user **20**. The director agent software preferably continuously monitors the status of the standalone media serving systems **14** and reroutes users **20** to the nearest regional data center **16** if the nearest media serving system **14** fails, reaches its fulfillment capacity or drops packets. Users **20** are typically assigned to the regional data center **14** that corresponds with the Internet backbone provider that serves their ISP, thereby maximizing performance of the second tier of the distribution network **12**. The regional data centers **14** also serve any users **20** whose ISP does not have an edge server.

The master data centers **18** are similar to regional data centers **16**, except that they are preferably much larger hardware deployments and are preferably located in a few peered data centers and co-location facilities, which provide the master data centers with connections to thousands of ISPs. With reference to FIG. **3**, master data centers **18** comprises multi-terabyte storage systems (e.g., a larger number of media serving systems **14**) to manage large libraries of content created, for example, by major media companies. The director agent automatically routes traffic to the closest master data center **18** if a media serving system **14** or regional data center **16** is unavailable. The master data centers **18** can therefore absorb massive surges in demand without impacting the basic operation and reliability of the network.

Transmissions can occur out of the data centers **16** and **18**. In the case of the satellite **32**, however, transmissions can also be implemented by taking what is being received and routing a copy thereof directly to the uplink system without first passing through the media serving systems **14**.

System Operation Overview

With reference to FIG. **4**, the Internet broadcast system **10** for streaming media generally comprises three phases, that is, acquisition **100**, broadcasting **102** and receiving **104**. In the acquisition phase **100**, content is provided to the system **10** from different sources such as Internet content providers (ICPs) or event or studio content sources. As stated previously, content can be received from audio and/or video equipment employed at a stadium for a live broadcast. The content can be, for example, live analog signals, live digital signals, analog tape recordings, digitally stored information (e.g., media-on-demand or MOD), among other types of content. The content can be locally encoded or transcoded at the source using, for example, file transport protocol (FTP), MSBD, or real-time transport protocol/real-time streaming protocol (RTP/RTSP). The content is collected using one or more acquisition modules **106**, which are described in more detail below in connection with FIG. **5**. The acquisition modules **106** represent different feeds to the system **10** in the acquisition network **12** and can be co-located or distributed. Generally, acquisition modules **106** can perform remote transcoding or encoding of content using FTP, MSBD, or RTP/RTSP or other protocols prior to transmission to a broadcaster **110** for multicast to edge devices and subsequent rendering to users **20** located relatively near to one of the edge devices. The content is then converted into a broadcast packet in accordance with an aspect of the present invention. This process of packaging packets in a manner to facilitate multicasting, and to provide insight at reception sites as to what the packets are and what media they represent, constitutes a significant advantage of the system **10** over other content delivery systems.

Content obtained via the acquisition phase **100** is preferably provided to one or more broadcasters **110** via a multicast cloud or network(s) **108**. The content is unicast or preferably multicast from the different acquisition modules **106** to the broadcasters **110** via the cloud **108**. As stated above, the cloud **108** is preferably a point-to-multipoint broadcast backbone. The cloud **108** can be implemented as one or more of a wireless network such as a satellite network or a terrestrial or wireline network such as optical fiber link. The cloud **108** can employ a dedicated ATM link or the Internet backbone, as well as a satellite link, to multicast streaming media. The broadcasters **110** are preferably in tier **120**, that is, they are master data centers **18** that receive content from the acquisition modules **106** and, in turn, broadcast the content to other receivers in tiers **116**, **118** and **120**.

During the broadcasting phase **102**, broadcasters **110** operate as gatekeepers, as described below in connection with FIG. **6**, to transmit content to a number of receivers in the tiers **116**, **118** and **120** via paths in the multicast cloud **108**. The broadcasters **110** support peering with other acquisition modules indicated generally at **112**. The peering relationship between a broadcaster **110** and an acquisition module **112** is via a direct link and each device agrees to forward the packets of the other device and to otherwise share content directly across this link, as opposed to a standard Internet backbone.

During the reception phase **104**, high-fidelity streams that have been transmitted via the broadcasters **110** across the multicast cloud **108** are received by servers **14**, **16** and **18** located as close to end users as possible. The system **10** is therefore advantageous in that streams bypass congestion and expense associated with the Internet backbone. As stated previously, the servers are preferably deployed in a tiered hierarchy comprising media serving systems **14**, regional data centers **16** and master data centers **18** that correspond to tiers **116**, **118** and **120**, respectively. The tiers **116**, **118** and

120 provide serving functions (e.g., transcoding from RTP to MMS, RealNet, HTTP, WAP or other protocol), as well as delivery via a local area network (LAN), the Internet, a wireless network or other network to user devices 122 for rendering (e.g., PCs, workstations, set-top boxes such as for cable, WebTV, DTV, and so on, telephony devices, and the like). The tiers in the reception phase are described in further detail below in connection with FIG. 7.

Data Transport Management

With reference to FIGS. 5, 6 and 7, hardware and/or software components associated with the acquisition 100, broadcasting 102 and reception phases 104 will now be described. These hardware and/or software components comprise various transport components for supporting MOD or live stream content distribution in one or more multicast-enabled networks in the system 10. The transport components can be, but are not limited to, a file transport module, a transport sender, a transport broadcaster, and a transport receiver. The content is preferably characterized as either live content and simulated/scheduled live content, or MOD (i.e., essentially any file). Streaming media such as live content or simulated/scheduled live content are managed and transported similarly, while MOD is handled differently.

Acquisition for plural customers A through X is illustrated in FIG. 5. By way of an example, acquisition for customer A involves an encoder, as indicated at 134, which can employ Real, WMT, MPEG, QT, among other encoding schemes with content from a source 24. The encoder also encodes packets into a format to facilitate broadcasting in accordance with the present invention. A disk 130 stores content from different sources and provides MOD streams, for example, to a disk host 132. The disk host 132 can be proxying the content or hosting it. Live content, teleconferencing, stock and weather data generating systems, and the like, on the other hand, is also encoded. The disk host 132 unicasts the MOD streams to a file transport module 136, whereas the encoder 134 provides the live streams to a transport sender 138 via unicast or multicast. The encoder can employ either unicast or multicast if QT is used. Conversion from unicast to multicast is not always needed, but multicast-to-multicast conversion can be useful. The file transport module 136 transfers MOD content to a multicast-enabled network. The transport sender 138 pulls stream data from a media encoder 134 or an optional aggregator and sends stream announcements (e.g., using session announcement protocol and session description protocol (SAP/SDP)) and stream data to multicast Internet protocol (IP) addresses and ports received from a transport manager. The transport manager is described below with reference to FIG. 8. When a Real G2 server is used to push a stream, as opposed to a pulling scheme, an aggregator can be used to convert from a push scheme to a pull scheme. The components described in connection with FIG. 5 can be deployed at the encoding center 28 or in a distributed manner at, for example, content provider facilities.

FIG. 6 illustrates an exemplary footprint for one of a plurality of broadcasts. As shown in FIG. 6, the broadcasting phase 102 is implemented using a transport broadcaster 140 and a transport bridge 142. These two modules are preferably implemented as one software program, but different functions, at a master data center 18 or network operations center. The transport broadcaster 140 performs transport path management, whereas the transport bridge 142 provides for peering. The broadcaster 140 and bridge 142 get data from the multicast cloud (e.g., network 108) being guided by the transport manager and forward it to an appropriate transport path. One transport broadcaster 140, for example, can be used to represent one transport path such as satellite uplink or fiber between data centers or even a cross-continental link to a data center in Asia from a data center in North America. The broadcaster 140 and bridge 142 listen to stream announcements from transport senders 138 and enable and disable multicast traffic to another transport path, accordingly. They can also tunnel multicast traffic by using TCP to send stream information and data to another multicast-enabled network. Thus, broadcasters 110 transmit corresponding subsets of the acquisition phase streams that are sent via the multicast cloud 108. In other words, the broadcasters 110 operate as gatekeepers for their respective transport paths, that is, they pass any streams that need to be sent via their corresponding path and prevent passage of other streams. Transmission can also be accomplished using TCP to another receiver regardless whether the system that the receiver is in is multicast-enabled. Thus, multicast operation can be disabled and the broadcast is still routed and distributed, although not quite as effectively or inexpensively as multicast.

FIG. 7 illustrates the reception phase 104 at one of a plurality of servers or data centers. As stated above, the data centers are preferably deployed in a tiered hierarchy 116, 118 and 120 comprising media serving systems 14, regional data centers 16 and master data centers 18, respectively. The tiers 116, 118 and 120 each comprise a transport receiver 144. Transport receivers can be grouped using, for example, the transport manager. Each transport receiver 144 receives those streams from the broadcasters 110 that are being sent to a group to which the receiver belongs. The transport receiver listens to stream announcements, receives stream data from plural transport senders 138 and feeds the stream data to media servers 146. The transport receiver 144 can also switch streams, as indicated at 154 (e.g., to replace a live stream with a local MOD feed for advertisement insertion purposes). The stream switch 154 can be a plug-in in the Media Server 14 or exist in the server itself to enable switching per end-user 20. The plug-in can interact with an advertisement platform to inject advertisements into streams. The MOD streams are received via the file transport 136 and stored, as indicated via the disk host 148, database 150 and proxy cache/HTTP server 152. The servers 146 and 152 provide content streams to users 20.

The transport components described in connection with FIGS. 5, 6 and 7 are advantageous in that they generalize data input schemes from encoders and optional aggregators to data senders, data packets within the system 10, and data feeding from data receivers to media servers, to support essentially any media format. The transport components preferably employ RTP as a packet format and XML-based remote procedure calls (XBM) to communicate between transport components.

The transport manager will now be described with reference to FIG. 8 which illustrates an overview of transport data management. The transport manager is preferably a software module deployed at the encoding facility 28 or other facility designated as a NOC. As shown in FIG. 8, multiple data sources 14 (e.g., database content, programs and applications) provide content as input into the transport manager 170. Information regarding the content from these data sources is also provided to the transport manager such as identification of input source 14 and output destination (e.g., groups of receivers). Decisions as to where content streams are to be sent and which groups of servers are to receive the streams can be predefined and indicated to the transport manager 170 as a configuration file or XBM function call in real-time. This information can also be entered via a graphical user interface (GUI) 172 or command line utility. In any event, the information is stored in a local database 174. The

database **174** also stores information for respective streams relating to defined maximum and minimum IP address and port ranges, bandwidth usage, groups or communities intended to receive the streams, network and stream names, as well as information for user authentication to protect against unauthorized use of streams or other distributed data.

With continued reference to FIG. **8**, a customer requests to stream content via the system **10** using, for example, the GUI **172**. The request can include the customer's name and account information, the stream name to be published (i.e., distributed) and the IP address and port of the encoder or media server from which the stream can be pulled. Requests and responses are sent via the multicast network (e.g., cloud **108**) using separate multicast addresses for each kind of transport component (e.g., a transport sender channel, a broadcaster channel, a transport manager channel and a transport receiver channel), or one multicast address and different ports. IP and port combinations can be used for TCP transmissions. An operator at the NOC **28** can approve the request if sufficient system resources are available such as bandwidth or media server capacity. Automatic approval can be provided by a scheduling system configured to provide immediate responses to attempted broadcasts. The transport manager **170** preferably pulls stream requests periodically. In response to an approved request, the transport manager **170** generates a transport command in response to the request (e.g., an XML-based remote procedure call (XBM) to the transport sender **138** corresponding to that customer which provides the assigned multicast IP address and port that the transport sender is allowed to use in the system **10**.

The transport sender **138** receives the XBM call and responds by announcing the stream that is going to be sent. All of the transport components listen to the announcement. Once the transport sender **138** commences sending the stream into the assigned multicast IP address and port, the corresponding transport broadcaster **140** filter the stream. The transport receiver **144** joins the multicast IP address and receives the data or stream if the stream is intended for a group to which the receiver **144** belongs. As stated above in connection with FIG. **4**, the receiver converts the steam received via the cloud **108** and sends it to the media server available to the users **20**. The data is then provided to the media server associated with the receiver. Receivers **144** and broadcasters **140** track announcements that they have honored using link lists.

As stated above, the transport components described with reference to FIGS. **4-8** preferably use RPT as a data transport protocol. Accordingly, Windows Media, RealG2 and QT packets are wrapped into RTP packets. The acquisition network **22** preferably employs an RTP stack to facilitate processing any data packets, wrapping the data packets with RTP header and sending the data packets. RTSP connection information is generally all that is needed to commence streaming.

RTP is used for transmitting real-time data such as audio and video, and particularly for time-sensitive data such as streaming media, whether transmission is unicast or multicast. RTP employs User Datagram Protocol (UDP), as opposed to Transmission Control Protocol (TCP) that is typically used for non-real-time data such as file transfer and e-mail. Unlike with TCP, software and hardware devices that create and carry UDP packets do not fragment and reassemble them before they have reached their intended destination, which is important in streaming applications. RTP adds header information that is separate from the payload (e.g., content to be distributed) that can be used by the receiver. The header information is merely interpreted as payload by routers that are not configured to use it.

RTSP is an application-level protocol for control over the delivery of data with real-time properties and provides an extensible framework to enable controlled, on-demand delivery of real-time data including live feeds and stored clips. RTSP can control multiple data delivery sessions, provide means for choosing delivery channels such as UDP, multicast UDP and TCP, and provide means for choosing delivery mechanisms based on RTP. HTTP is not suitable for streaming media because it is more of a store-and-forward protocol that is more suitable for web pages and other content that is read repeatedly. Unlike HTTP, RTSP is highly dynamic and provides persistent interactivity between the user device (hereinafter referred to as a client) and server that is beneficial for time-based media. Further, HTTP does not allow for multiple sessions between a client and server, and travels over only a single port. RTP can encapsulate HTTP data, and can be used to dynamically open multiple RTP sessions to deliver many different streams at the same time.

The system **10** employs transmission control software deployed at the encoding facilities **28**, which can operate as a network operations center (NOC), and at broadcasters **110** (e.g., master data centers **120**) to determine which streams will be available to which nodes in the distribution system **12** and to enable the distribution system **12** to support one-to-one streaming or one-to-many streaming. The extensible language capabilities of RTSP augment the transmission control software at the edge of the distribution network **12**. Since RTSP is a bi-directional protocol, its use enables encoders **134** and receivers **144** to talk to each other, allowing for routing, conditional access (e.g., authentication) and bandwidth control in the distribution network **12**. Standard RTSP proxies can be provided between any network components to allow them to communicate with each other. The proxy can therefore manage the RTSP traffic without necessarily understanding the actual content.

For every RTSP stream, there is an RTP stream. Further, RTP sessions support data packing with timestamps and sequence numbers. They can also be used for carrying stereo information, wide screen versions of requested media, different audio tracks, and so on. RTP packets are wrapped in a broadcast protocol. Applications in the receiving phase **104** can use this information to determine when to expect the next packet. Further, system operators can use this information to monitor network **12** and satellite **32** connections to determine the extent of latency, if any.

Encoders and data encapsulators written with RTP as the payload standard are advantageous because off-the-shelf encoders (e.g., MPEG2 encoders) can be introduced without changing the system **10**. Further, encoders that output RTP/RTSP can connect to RTP/RTSP transmission servers. In addition, the use of specific encoder and receiver combinations can be eliminated when all of the media players support RTP/RTSP.

The authentication and selective network connection provided by the present invention allows networks to offer multi-tiered service (e.g., different users can access different types of streams), and control over user errors when requesting access (e.g., requesting incorrect bandwidth for their connection speed). Thus, service providers can distinguish users who have paid for value-added services and authenticate these users for higher quality digital audio and video services.

System Operation: Broadcast Triggers

Methods and systems described with respect to FIGS. **9-15** provide a means for performing real-time processing and modification of content streams (e.g., audio streams, video streams, software downloads, etc.) for delivery across one or more networks to end users. As will be discussed in greater

detail below, such methods and systems enable a flexible and adaptable approach for delivering video content from a content publisher to a heterogeneous set of end users across the Internet. Advantages of such methods and systems include, for example, on-the-fly targeted advertising to specific end users (or a group of end users), adherence to localized broadcasting rules and regulations, as well as other advantages that will become more apparent in the discussion below.

More specifically, FIG. **9** is a block diagram of a network environment **900** including a content publisher **905** and associated content source **910**, a trigger entry **915**, satellite/terrestrial broadcast system **920**, a streaming system **925** including an encoder **930** and content delivery manager **935**, a data repository **940** and an advertisement server **945**, content delivery network **950-1** including web server **955-1** and streaming server **960-1** in communication with end user (i.e., client) **965-1**, and content delivery network **950-2** including web server **955-2** and streaming server **960-2** in communication with end user (i.e., client) **965-2**.

With reference to FIG. **9**, It should be noted that content publisher **905** and content source **910** are shown as related logical entities and do not necessarily have to be located in the same physical location. For example, the content source **910** may acquire an input (e.g., video content via a camera at a sporting event) in a first location and, then, transmit the input to the content publisher **905** for processing at a second location. Of course, the content publisher **905** and content source **910** may also be one and the same (i.e., the same entity) sharing the same functional and logical characteristics while residing at the same physical location. The configuration shown in FIG. **9** is shown for purposes of illustration only, and depicts only one example representation of the methods and systems for content distribution and delivery as described herein.

In general, the content source **910** (and/or content publisher **905**) acquires content (e.g., video capture of a live sporting event) for subsequent and, at times, real-time distribution to various end users associated with the content publisher **905**. Note that content streams may be stored and cached for on-demand type contribution as well. As shown in FIG. **9**, the acquired content can be distributed via traditional terrestrial antennae and satellite broadcasting means. For example, satellite/terrestrial broadcast system **920** disseminates video content acquired by the content source **910** to end users that are capable of receiving such traditional satellite and terrestrial antennae communications.

In addition to the satellite/terrestrial broadcast system **920**, the content source **910** (and/or content publisher **905**) can also distribute a content stream **912** (e.g., audio media, video media, etc.) via streaming system **925** in furtherance of various embodiments that will be described in greater detail below. Accordingly, streaming system **925** has similar architectures and provides similar functionalities as the methods and systems previously described with respect to the example embodiments in FIGS. **4-8**.

A trigger generator **915** can inject additional information (i.e., a trigger signal) into the content stream **912** that is not initially captured by the content source **910**. The trigger generator **915** can be an automated process (e.g., software, sensors, etc.), a human (as shown in FIG. **9**), as well as other means suitable for entering additional information into a content stream. Typically, the trigger signal contains information related to a broadcaster's audio/video play-out system during a traditional television-like broadcast.

For example, assume that a content publisher "Broadcaster A" intends to provide a live broadcast of a sporting event. Broadcaster A would acquire the audio/video directly from the sporting event via a content source such as a camera system installed at the event. As it is commonly known, a live (or real-time) broadcast of a sporting event does not provide a continuous content stream from a single static acquisition source such as the camera system. In other words, a live broadcast typically includes commercials, cut-outs to other broadcast feeds, and the like. These other content feeds are managed by Broadcaster A's play-out system.

In the context of embodiments described in this specification, the play-out system would indicate a switch or transfer to the alternate content feeds (e.g., commercials/advertisements, cut-outs, etc.) by way of a trigger signal injected into the content stream (i.e., as injected by the trigger generator **915**). In this manner, the trigger signal provides real-time notification to downstream broadcast systems (e.g., content delivery manager **935**) that the content stream is subject to switch to an alternate content feed (e.g., commercial or advertisement). The downstream broadcast systems have discretion to switch to an alternative content feed or continue transmitting the original content stream in accordance with the downstream broadcast systems' contractual relationship with the broadcaster (i.e., content publisher).

Still referring to FIG. **9**, the content source **910** (and/or content publisher **905**) transmits the content stream **912** to the encoder **930** at stream ingest **927**. Note that the trigger signal may be injected into the content stream **912** at the content source **910**, at the content publisher **905**, or at another third party entity responsible for providing trigger signals and play-out management of the content stream **912**.

According to one example embodiment, the encoder **930** provides real-time encoding of the content stream **912** and can include Real encoding, QT encoding, WM encoding, and the like (see FIG. **2**). After being encoded at the encoder **930**, the content stream **912** is transmitted within the streaming system **925** to content delivery manager **935**. In one example configuration, the content stream **912** is propagated downstream through the streaming system **925** (and possibly the content delivery network **950**) using RTSP (Real Time Streaming Protocol). In such a configuration, the actual audio/video data contained in the content stream may be distributed downstream using RTP (Real-time Transport Protocol).

During general operation, and as will be discussed in greater detail below with respect to FIG. **10**, the content delivery manager **935** provides multiple functions related to content stream processing and subsequent content delivery to end users (e.g., real-time streaming, on-demand delivery, etc.). As is shown in FIG. **9**, the content delivery manager **935** is in communication with data repository **940** (e.g., Electronic Programming Guide) and advertisement server **945**. Depending on how the trigger signals in the content stream **912** are processed, the content delivery manager **935** may interact with (i.e., transcieve data with) both the data repository **940** and the advertisement server **945** prior to delivering the content stream **912** to end users. Such processing is discussed in more detail below with respect to FIG. **10**.

After processing the content stream **912**, the content delivery manager **935** transmits the content stream **912** (or a modification thereof) to content delivery network **950-1** and content delivery network **950-2** (hereinafter collectively referred to as content delivery network **950**) for subsequent delivery to end user **965-1** and end user **965-2** (hereinafter collectively referred to as end user **965**), respectively.

In the example embodiment of FIG. **9**, content delivery network **950-1** comprises a web server **955-1** and streaming server **960-1**. Likewise, content delivery network **950-2** comprises a web server **955-2** and streaming server **960-2**. For

brevity, web servers **955-1** and **955-2** will be collectively referred to as web server **955**, while streaming servers **960-1** and **960-2** will be collectively referred to as streaming server **960**. Generally, web server **955** provides front-end interaction with end user **965** by serving web pages, initiating registration/logon services, providing e-commerce and transactional payment capabilities, and the like. As its name suggests, streaming server **960** typically provides back-end streaming services by delivering, for example, the content stream **912** as provided by content delivery manager **935**. Note that the vertical ellipses in each content delivery network **950-1** and **950-2** indicate that there can be multiple web and/or streaming servers associated with each respective content delivery network.

Although shown as different entities in the example configuration of FIG. **9**, it should be noted that the functionality of web server **955** and streaming server **960** may be implemented in a single device or, alternatively, in multiple distributed devices within content delivery network **950** that have combined functionality of web server **955** and streaming server **960**, according to embodiments herein.

Other example embodiments can include betting triggers used for delivery of online gambling and betting events such as horse races, dog races, etc. For instance, in one embodiment the trigger generator **915** can inject a trigger signal into a content stream, where the content stream is that of, say, a dog race and the pre-race activities associated therewith. Assume that the trigger signal is injected into the content stream to indicate the start of the dog race. In one embodiment, the content delivery manager **935** could detect the trigger signal and cease any further betting activities associated with that particular race. For example, the content delivery manager **935** could instruct web server **955** to stop accepting further bets for the dog race that had just begun (i.e., cease e-commerce interaction with the end user). The trigger signal could further indicate that the race has completed and that the content delivery manager **935** should discontinue delivery of the content stream to end users authorized to view only that race.

Referring now to FIG. **8**, a block diagram depicts functionality of a content delivery manager in the context of a network environment **1000**. As shown, network environment **1000** includes a content source **1005** and associated content publisher **1010**, content delivery manager **1040**, content delivery network **1045** in communication with end user (i.e., client) **1050**, advertisement server **1060**, and Electronic Programming Guide (EPG) **1055**. The content delivery manager **1015** further includes stream intake module **1020**, trigger processing logic **1025**, stream packaging module **1030**, and stream delivery module **1040**.

In the example embodiment of FIG. **10**, assume that content source **1005** acquires and subsequently distributes a content stream associated with a particular event or program (e.g., a football match) as provided by content publisher **1010**. For instance, in the example embodiment of FIG. **10**, the content stream contains content associated with a particular channel (i.e., Channel **2** "CH. **2**") of multiple channels associated with content publisher **1010**. Furthermore, Channel **2** in this example is associated with a program (i.e., Program **6** "P**6**") during a time period Time **2** "T**2**". The various related channels, programs, and time periods of content publisher **1010** are depicted in Electronic Programming Guide "EPG" **1055**.

It should also be noted that, in accordance with the example broadcast scenario described above with respect to FIG. **10**, the EPG **1055** and end user **1050** are both associated with a particular geographic region "Region A" (e.g., Ireland, Chicago, a specific zip code, etc.). The EPG **1055** may also include programming information (e.g., channels, programs, etc.) for other geographic regions as well.

The content source **1005** may interact with the content publisher **1010** for various reasons, such as for play-out management and control. For example, the content publisher **1010** may inject a trigger signal(s) into the content stream for subsequent processing at the content delivery manager **1015**.

Note that content publisher **1010** and content source **1005** have the same or similar configurations, relationships, and functionalities as the content publisher **905** and content source **910** previously described with respect to FIG. **9**.

During general operation, the content delivery manager **1015** receives the content stream via stream intake module **1020**. The stream intake module **1020** processes the content stream and then, according to one example embodiment, sends the content stream to stream delivery module **1040**. During its processing, the stream intake module **1020** is also capable of detecting and/or extracting trigger signals embedded in the content stream. For example, in one embodiment the trigger signal contains additional information (e.g., metadata) related to the type of content and/or trigger event (e.g., advertisement, black out, etc.) associated with the trigger signal.

Having detected and/or extracted a trigger signal within the content stream, the stream intake module **1020** provides information related to the detected trigger signal to trigger processing logic **1025**. For example, as shown in the embodiment of FIG. **10**, the stream intake module **1020** indicates to the trigger processing logic **1025** that a detected trigger signal is associated with Channel **2** at time period T**2**.

In one example embodiment, and with the trigger signal information provided by the stream intake module **1020**, the trigger processing logic **1025** interacts with EPG **1055** (e.g., across a network such as the Internet) to determine whether the content stream should be modified. As shown in the example embodiment of FIG. **10**, for Channel **2** at time period T**2**, program P**6** should be "blacked out" for Region A. When a given program is to be "blacked out" for a given region and time period, that program is not authorized to be broadcasted to users in the given region for the given time period (e.g., for contractual reasons associated with the content publisher **1010**). For example, a national broadcaster or content publisher may have a particular sporting event blacked out for a given time and/or region if the same sporting event is to be broadcasted by a local broadcaster or station. Thus, returning to the example scenario of FIG. **10**, the EPG **1055** indicates to the content delivery manager **1015** via trigger processing logic **1025** that program P**6** should be blacked out for time period T**2** in Region A. The EPG **1055** can further indicate to the content delivery manager **1015** that program P**6** on Channel **2** should also be blacked out during time period T**3** in Region A.

Note that trigger processing logic **1025** can use proximity data (e.g., an IP address) associated with the end user **1050** to determine which region to query within EPG **1055** (as depicted by arrow **1037**).

Assume that in another example embodiment the EPG **1055** indicates that program P**6** does not need to be blacked out during time period T**2** in Region A. In this example, the trigger processing logic **1025** can determine that the trigger signal detected in the content stream indicates a modification to the content stream, such as a commercial break. As such, the trigger processing logic **1025** would initiate a process to modify the content stream by inserting an advertisement or commercial into the content stream for delivery to end users. As will be described in more detail below, insertion of a

commercial or advertisement may be targeted to end users in a particular geographic region (e.g., Region A).

Having determined that the content stream should be blacked out and/or a commercial or advertisement should be inserted, the trigger processing logic **1025** passes this information along to stream packaging module **1030**. Stream packaging module **1030** prepares and configures modifications to content streams in accordance with instructions from the trigger processing logic **1025**.

For example, if the trigger processing logic **1025** instructs the stream packaging module **1030** that the corresponding content stream currently being processed by the content delivery manager **1015** should be blacked out, the stream packaging module **1030** can instruct the stream delivery module **1040** to terminate delivery of the content stream to end users that are subject to the black out restrictions. Alternatively, the stream packaging module **1030** can provide alternative content (e.g., commercials, advertisements, pre-configured black out programs or static messages, etc.) to stream to end users in lieu of the blacked out content stream.

If the trigger processing logic **1025** indicates to the stream packaging module **1030** that the content stream should be modified by inserting a commercial or advertisement, the stream packaging module **1030** would perform various steps to determine which commercials or advertisement should be inserted into the content stream. For example, in one embodiment the stream packaging module **1030** inserts pre-configured commercials and/or advertisements into the content stream that have been provided by the content publisher or other entities potentially associated with monetizing content delivery to end users.

In another example embodiment, the stream packaging module **1030** queries an advertisement server **1060** (e.g., across a network such as the Internet) to determine which commercials or advertisements should be inserted into the content stream. In this manner, the stream packaging module **1030** can provide information that is specific to the user (i.e., user data **1035**) to the advertisement server **1060**. Information specific to a user can include, for example, geographical data, prior viewing history such as which types/categories of content a user has previously requested for viewing, information personal to the user such as age, sex, and the like, as well as other attributes suitable for selecting commercials and/or advertisements for a targeted advertising campaign. Assume for the example embodiment of FIG. **10** that the user data **1035** contains proximity parameters (e.g., IP address) that indicate a geographic region in which the end user **1050** is located (i.e., Region A). With the user data **1035**, the advertisement server **1060** provides the content delivery manager **1015** with a commercial and/or advertisement targeted to end user's **1055** geographic region (i.e., Region A). As such, the targeted commercial and/or advertisement would be inserted into the content stream at stream delivery module **1040** for delivery to end user **1055** via content delivery network **1045**.

FIG. **11** is a schematic diagram of a computer system **1100** upon which embodiments of the present invention may be carried out and implemented. For example, one or more computing devices **1100** may be used to manage and/or administer the streaming of content across one or more networks (e.g., the Internet, content delivery networks (CDNs), and the like).

According to the present example, the computer system **1100** includes a bus **1101** (i.e., interconnect), at least one processor **1102**, at least one communications port **1103**, a main memory **1104**, a removable storage media **1105**, a read-only memory **1106**, and a mass storage **1107**. Processor(s) **1102** can be any known processor, such as, but not limited to, an Intel® Itanium® or Itanium 2® processor(s), AMD® Opteron® or Athlon MP® processor(s), or Motorola® lines of processors. Communications ports **1103** can be any of an RS-232 port for use with a modem based dial-up connection, a 10/100 Ethernet port, a Gigabit port using copper or fiber, or a USB port. Communications port(s) **1103** may be chosen depending on a network such as a Local Area Network (LAN), a Wide Area Network (WAN), or any network to which the computer system **1100** connects (e.g., content delivery network **950** and/or **1045**). The computer system **1100** may be in communication with peripheral devices (e.g., display screen **130**, input device **116**) via Input/Output (I/O) port **1109**.

Main memory **1104** can be Random Access Memory (RAM), or any other dynamic storage device(s) commonly known in the art. Read-only memory **1106** can be any static storage device(s) such as Programmable Read-Only Memory (PROM) chips for storing static information such as instructions for processor **1102**. Mass storage **1107** can be used to store information and instructions. For example, hard disks such as the Adaptec® family of Small Computer Serial Interface (SCSI) drives, an optical disc, an array of disks such as Redundant Array of Independent Disks (RAID), such as the Adaptec® family of RAID drives, or any other mass storage devices may be used.

Bus **101** communicatively couples processor(s) **1102** with the other memory, storage and communications blocks. Bus **1101** can be a PCI/PCI-X, SCSI, or Universal Serial Bus (USB) based system bus (or other) depending on the storage devices used. Removable storage media **1105** can be any kind of external hard-drives, floppy drives, IOMEGA® Zip Drives, Compact Disc-Read Only Memory (CD-ROM), Compact Disc-Re-Writable (CD-RW), Digital Video Disk-Read Only Memory (DVD-ROM), etc.

Embodiments herein may be provided as a computer program product, which may include a machine-readable medium having stored thereon instructions, which may be used to program a computer (or other electronic devices) to perform a process. The machine-readable medium may include, but is not limited to, floppy diskettes, optical discs, CD-ROMs, magneto-optical disks, ROMs, RAMs, erasable programmable read-only memories (EPROMs), electrically erasable programmable read-only memories (EEPROMs), magnetic or optical cards, flash memory, or other type of media/machine-readable medium suitable for storing electronic instructions. Moreover, embodiments herein may also be downloaded as a computer program product, wherein the program may be transferred from a remote computer to a requesting computer by way of data signals embodied in a carrier wave or other propagation medium via a communication link (e.g., modem or network connection).

As shown, main memory **1104** is encoded with content delivery manager application **1150-1** that supports functionality as discussed above and as discussed further below. Content delivery manager application **1150-1** (and/or other resources as described herein) can be embodied as software code such as data and/or logic instructions (e.g., code stored in the memory or on another computer readable medium such as a disk) that supports processing functionality according to different embodiments described herein. During operation of one embodiment, processor(s) **1102** accesses main memory **1104** via the use of bus **1101** in order to launch, run, execute, interpret or otherwise perform the logic instructions of the content delivery manager application **1150-1**. Execution of content delivery manager application **1150-1** produces processing functionality in content delivery manager process **1150-2**. In other words, the content delivery manager process

1150-2 represents one or more portions of the content delivery manager application **1150-1** performing within or upon the processor(s) **102** in the computer system **1100**.

It should be noted that, in addition to the content delivery manager process **1150-2** that carries out method operations as discussed herein, other embodiments herein include the content delivery manager application **1150-1** itself (i.e., the unexecuted or non-performing logic instructions and/or data). The content delivery manager application **1150-1** may be stored on a computer readable medium (e.g., a repository) such as a floppy disk, hard disk or in an optical medium. According to other embodiments, the content delivery manager application **1150-1** can also be stored in a memory type system such as in firmware, read only memory (ROM), or, as in this example, as executable code within the main memory **1104** (e.g., within Random Access Memory or RAM). For example, content delivery manager application **1150-1** may also be stored in removable storage media **1105**, read-only memory **1106**, and/or mass storage device **1107**.

In addition to these embodiments, it should also be noted that other embodiments herein include the execution of the content delivery manager application **1150-1** in processor(s) **1102** as the content delivery manager process **1150-2**. Thus, those skilled in the art will understand that the computer system **1100** can include other processes and/or software and hardware components, such as an operating system that controls allocation and use of hardware resources.

It should be noted that the content delivery manager **935** in FIG. **9**, the content delivery manager **1015** in FIG. **10**, and the content delivery manager **1150** (i.e., content delivery manager application **1150-1** and content delivery manager process **1150-2**) in FIG. **11** each have the same or similar functionality, capabilities, and features as described with regard to their respective figures and embodiments.

As discussed herein, embodiments of the present invention include various steps or operations. A variety of these steps may be performed by hardware components or may be embodied in machine-executable instructions, which may be used to cause a general-purpose or special-purpose processor programmed with the instructions to perform the operations. Alternatively, the steps may be performed by a combination of hardware, software, and/or firmware.

FIGS. **12-15** include flowcharts according to embodiments herein. The rectangular elements are herein denoted as "steps" and represent computer software instructions or groups of instructions that carry out such functions. The flow diagrams do not necessarily depict the syntax of any particular programming language. Rather, the flow diagrams illustrate the functional information one of ordinary skill in the art could use to fabricate circuits or to generate computer software (or a hybrid of both circuits and software code) to carry out the features as described herein.

It should be noted that many routine program elements, such as initialization of loops and variables and the use of temporary variables are inherent in the flowcharts. It will be appreciated by those of ordinary skill in the art that unless otherwise indicated herein, the particular sequence of steps described is illustrative only and can be varied without departing from the spirit of the invention. Thus, unless otherwise stated the steps described below are unordered meaning that, when possible, the steps can be performed in any convenient or desirable order.

Now, more specifically, FIG. **12** is a flow chart **1200** of processing steps that shows processing operations performed by the content delivery manager **1150** (i.e., content delivery manager application **1150-1** and/or the run-time implementation of content delivery manager process **1150-2**) in accordance with one example embodiment.

In step **1205**, the content delivery manager **1150** receives a video stream from a content source for delivery to an end user (e.g., client) of a content publisher. For example, the end user can subscribe to the content publisher to receive video content. In other words, the end user can log onto a content publisher's website (if the end user is a subscriber of the content publisher) to receive a live video stream from the content publisher as delivered by the content delivery manager **1150**, according to one example embodiment.

In step **1210**, the content delivery manager **1150** detects a trigger signal within the video stream. The trigger signal can be indicative of a temporal mark injected into the video stream by the content publisher (e.g., the trigger signal indicates that a commercial and/or advertisement should be inserted into the content stream). The trigger can also be injected into the video stream by an entity associated with content publisher. For example, in one embodiment the trigger signal is generated relative to the content source by a human associated with the content publisher.

In step **1215**, the content delivery manager **1150** processes the trigger signal to determine whether to modify delivery of the video stream to the end user.

In step **1220**, the content delivery manager **1150** modifies, if necessary, the delivery of the video stream in accordance with the processing of the trigger signal. For example, the content delivery manager **1150** can modify the video stream to include a commercial and/or advertisement.

FIG. **13** is a flow chart **1300** of processing steps that shows processing operations performed by the content delivery manager **1150** in accordance with one example embodiment.

In step **1305**, the content delivery manager **1150** processes the trigger signal to determine whether to modify the video stream prior to being delivered to the end user(s).

In step **1310**, the content delivery manager **1150** queries a data repository having information related to a content programming schedule associated with the content publisher. In an example embodiment, the data repository includes an Electronic Programming Guide (EPG) configured to provide a schedule that identifies when various content provided by the content publisher will be available for reception by authorized end users of the content publisher.

In step **1315**, the content delivery manager **1150** receives a response from the data repository that includes synchronization information for modifying, if necessary, the delivery of the video stream to the end user. Additionally, the synchronization information can include geo-filtering information and/or advertisement information. For example, the geo-filtering information can include regions (e.g., related to IP addresses) to which the video content should not be delivered (or regions that are not authorized to receive delivery of the video stream). As its name suggests, the synchronization information can inform the content delivery manager **1150** when and how to modify the video stream, especially if the video stream is being delivered to the end user(s) in real-time.

In step **1320**, the content delivery manager **1150** modifies delivery of the video stream (e.g., inserts a commercial, blacks out the video stream, etc.).

In step **1325**, and in response to querying the data repository, the content delivery manager **1150** discontinues the delivery of the video content based on programming data received from the data repository (e.g., due to black out restrictions).

In step **1330**, the content delivery manager **1150** continues to receive the video stream from the content source. In one embodiment, the continued receipt of the video stream

enables the content delivery manager **1150** to detect a second trigger signal that would be capable of reinitiating delivery of the video stream to the end user (e.g., the trigger signal indicates that a commercial or black out time period has ended).

According to another example embodiment, the content delivery manager **1150** extracts synchronization information from the trigger signal. In this manner, the synchronization information indicates a type of event associated with the video stream and can specify temporal information relative to the detection of the trigger signal. The type of event can include, for example, an advertisement event, a program initiation event, a program termination event, etc. When the trigger signal includes supplemental information (e.g., trigger event type, time codes, etc.), the trigger processing logic of the content delivery manager **1150** can be disencumbered with the additional processing necessary to determine whether to modify delivery of the video stream as previously described and, as a result, may not necessarily have to communicate with external data sources such as the electronic programming guide (EPG).

FIG. **14** is a flow chart **1400** of processing steps that shows processing operations performed by the content delivery manager **1150** in accordance with one example embodiment.

In step **1405**, the content delivery manager **1150** processes the trigger signal to determine whether to modify, if necessary, delivery of the video stream.

In step **1410**, the content delivery manager **1150** applies proximity parameters (e.g., IP addresses) associated with the end user to the trigger signal in order to determine whether to modify the delivery of the video stream to the end user.

In step **1415**, the content delivery manager **1150** modifies delivery of the video stream.

In step **1420**, the content delivery manager **1150** discontinues delivery of the video stream to the end user based on the application of the proximity parameters to the trigger signal. For example, the proximity parameters can indicate that the end user is not authorized to receive the video stream due to: i) a time relative to the detection of the trigger signal, and/or ii) a geographic location associated with the end user as indicated by the proximity parameters.

In step **1425**, the content delivery manager **1150** processes the IP address to determine a geographic region associated with the network from where the end user receives video content.

FIG. **15** is a flow chart **1500** of processing steps that shows processing operations performed by the content delivery manager **1150** in accordance with one example embodiment.

In step **1505**, the content delivery manager **1150** determines that an advertisement should be injected into the video stream.

In step **1510**, the content delivery manager **1150** queries an advertisement server.

In step **1515**, the content delivery manager **1150** receives a response from the advertisement server that identifies a plurality of candidate advertisements for injection into the video stream.

In step **1520**, the content delivery manager **1150** selects, from the plurality of candidate advertisements, a candidate advertisement for injection into the video stream based on proximity parameters associated with the end user. In this manner, the proximity parameters can specify a geographic location of the end user to where video content is transmitted.

In step **1525**, the content delivery manager **1150** modifies delivery of the video stream.

In step **1530**, the content delivery manager **1150** injects the selected candidate advertisement into the video stream for delivery to the end user. In one example embodiment, the selected candidate advertisement is targeted for the geographic location of the end user.

According to yet another example embodiment, the content delivery manager **1150** selects an advertisement to inject into the video stream based on information extracted from the trigger signal. For example, the selected advertisement can be targeted to a geographic location associated with the end user. In turn, the content delivery manager **1150** injects the selected advertisement into the video stream for delivery to the end user.

In accordance with another embodiment, the content delivery manager **1150** receives a video stream from a content source for delivery to a end user of a content publisher. The content source is associated with the content publisher in this particular example. Furthermore, the end user has been pre-authorized to receive video content from the content publisher.

During operation, the content delivery manager **1150** detects a trigger signal within the video stream. In this example embodiment, the trigger signal is indicative of a temporal mark injected into the video stream by a human associated with the content publisher. In response to detecting the trigger signal, the content delivery manager **1150** queries an Electronic Programming Guide (EPG) to determine whether to modify the delivery of the video stream to the end user. For purposes of example, the EPG can be configured to provide a schedule that identifies when various content provided by the content publisher will be available for reception by authorized end users of the content publisher.

Accordingly, the content delivery manager **1150** receives a response from the EPG that includes advertisement information and/or geo-filtering information. If necessary, the content delivery manager **1150** modifies delivery of the video stream to the end user in accordance with the advertisement information and/or the geo-filtering information.

System Operation: User Authentication

Similar to the content delivery configuration previously described with respect to FIGS. **1-15**, the example embodiment shown in FIG. **16** provides a method and system for content delivery across streaming system **925**. FIG. **16** further depicts methods and systems for authenticating end users for delivery of video content by using pre-configured authentication information provided by a content publisher. The pre-configured authentication information can include subscription databases used by content publishers for authenticating users for non-Internet based delivery of video content (e.g., traditional broadcasts including satellite television, cable television, and the like).

For example, an authentication manager can "dip" into a subscriber's or content publisher's database to determine whether a given end user is authorized to receive certain content from the content publisher or broadcaster. This so-called "dipping" provides a seamless means for authenticating Internet end users to receive video content associated with a content publisher such that the content publisher does not have to create a new subscriber database for Internet end users or modify its already-established subscriber databases for traditional television end users (e.g., satellite and cable subscriber databases).

In particular, FIG. **16** is a block diagram of a network environment **1600** including a content publisher **1605** and associated content source **1610**, satellite/terrestrial broadcast system **1617**, streaming system **1625** including encoder **1630** and authorization manager **1635**, subscription database **1640**,

and content delivery network **1650** (including web server **1655** and streaming server **1657**) in communication with end user **1660**.

Note that content publisher **1605** and content source **1610** have the same or similar configurations, relationships, and functionalities as the content publisher **905** and content source **910** previously described with respect to FIG. **9**.

It should also be noted that satellite/terrestrial broadcast system **1617** has the same or similar configurations, functionalities, and features as satellite/terrestrial broadcast system **920** previously discussed with respect to FIG. **9**. Satellite/terrestrial broadcast system **1617** may also provide cable television distribution means for delivering video content to end users.

During general operation, the content source **1610** (e.g., via content publisher **1605**) distributes a content stream **1620** (e.g., audio stream, video stream, etc.) into streaming system **1625** at the stream ingest. The content stream **1620** may be contain live content, such as a sporting event, for real-time (or near real-time) distribution to end users across streaming system **1625** and content delivery network **1650**. Note that video streams **160** may also be stored and cached for on-demand type distribution.

Similar to the encoder **930** described with respect to FIG. **9**, encoder **1630** provides real-time encoding of the content stream **1620** and can include Real encoding, QT encoding, WM encoding, and the like (see FIG. **2**). After being encoded at the encoder **1630**, the video stream **1620** is transmitted within the streaming system **1625** to content delivery manager **1635**. In one example configuration, the content stream **1620** is propagated downstream through the streaming system **1625** (and possibly the content delivery network **1650**) using RTSP (Real Time Streaming Protocol). In such a configuration, the actual audio/video data contained in the content stream **1620** may be distributed downstream using RTP (Real-time Transport Protocol).

Referring still to the example embodiment of FIG. **16**, the authorization manager receives the content stream **1620** for distribution to end user **1660**. Prior to transmitting the content stream **1620** downstream to end user **1660** (via content delivery network **1650**), the authorization manager **1635** determines whether end user **1660** is authorized to receive the content stream **1620**.

Note that the authorization manager **1635** supports functionality for both streaming and authentication/authorization services, as shown in the example embodiment of FIG. **16**. However, the authorization manager **1635** does not necessarily have to provide streaming services and, as such, may only provide authentication/authorization services. For example, upon authenticating/authorization by authorization manager **1635**, the encoder **1630** may bypass the authorization manager **1635** and transmit the content stream **1620** to content delivery network **1650** for delivery to end user **1660**, as shown by the perforated arrow **1632**. The content stream **1620** may also pass through another entity (e.g., content delivery manager **935**, **1015**, and/or **1150**) suitable for managing and administering delivery of video content in streaming system **1625**.

To authorize/authenticate end user **1660** for delivery of content stream **1620**, the authorization manager **1635** first receives an authorization request **1665** from end user **1660**. For example, in one embodiment the authorization manager **1635** receives the authorization request **1665** from end user **1660** via web server **1655** of content delivery network **1650**. In another embodiment, the end user **1660** sends an authorization request **1667** (as shown by the perforated arrow) directly to authorization manager **1635**.

Note that, similar to the example embodiment of FIG. **9**, web server **1655** provides front-end interaction with end user **1660** by serving web pages, initiating registration/logon services, providing e-commerce and transactional payment capabilities, and the like. In particular, web server **1655** provides authorization/authentication services in its interaction with authorization manager **1635** in accordance with the example embodiment of FIG. **16**.

As its name suggests, streaming server **1655** typically provides back-end streaming services by delivering, for example, the content stream **1620** as provided by either authorization manager **1635** and/or encoder **1630**. Note that the vertical ellipses in content delivery network **1650** indicate that there can be multiple web and/or streaming servers associated with content delivery network **1650**.

Having received the authorization request **1665** (or **1667**) from end user **1660**, the authorization manager **1635** communicates with ("dips" into) subscription database **1640** to determine whether end user **1660** is authorized to receive content stream **1620**. As previously mentioned subscription database **1640** is associated with content publisher **1605** and provides subscription information related to various end users authorized to receive content from content publisher **1605**. For example, subscription database **1640** may contain subscription information related to traditional satellite and/or cable television services provided by content publisher **1605**. The authorization manager's **1635** interaction with subscription database **1640** is discussed in more detail below with respect to FIG. **17**.

After verifying that the end user **1660** is authorized to receive the content stream **1620**, the authorization manager **1635** initiates delivery of the content stream **1620** to end user **1660** via content delivery network **1650**. The content stream **1620** can propagate downstream directly from encoder **1630** to content delivery network **1650**, from encoder **1630** to authorization manager **1635** and then to content delivery network **1650**, or from encoder **1630** to the content delivery network **1650** via another mechanism for managing delivery of content streams in streaming system **1625** (e.g., via content delivery manager **935**, **1015**, and/or **1150**).

FIG. **17** is a block diagram of a network environment **1700** including a content publisher **1705** and associated content source **1710**, authorization manager **1715**, data repository **1720**, subscription database **1725**, and content delivery network **1730** in communication with end user **1735**. Authorization manager **1715** further includes data storage module **1740**, verification module **1745**, stream intake module **1750**, and stream delivery module **1755**.

Note that content publisher **1705** and content source **1710** have the same or similar configurations, relationships, and functionalities as the content publisher **905** and content source **910** previously described with respect to FIG. **9**.

It should also be noted that the end user **1 1770** may communicate directly with the verification module **1730** of authorization manager **1715** or, alternatively, the end user **1 1770** may communicate with verification module **1730** via a web server (e.g., web server **1655**) associated with content delivery network **1760**.

During operation, the stream intake module **1720** of authorization manager **1715** receives a content stream (e.g., video stream) from content source **1710** and/or content publisher **1705**. Upon receiving the content stream, the stream intake module **1720** checks with the verification module **1730** to determine whether end user **1 1770** is authorized to receive the content stream.

The stream intake module **1720** passes the content stream through to stream delivery module **1725** so that the content

stream can be delivered (via content delivery network **1760**) to end user **1 1770** upon authorization/authentication by verification module **1730**. Note that the verification module **1730** may notify either the stream intake module **1720** and/or the stream delivery module **1725** of the authorization status of end user **1 1770**. If, for example, the verification module **1730** notifies the stream intake module **1720** that end user **1 1770** is authorized to receive the content stream, the stream intake module **1720** passes the content stream to stream delivery module **1725** for unfettered content stream delivery to end user **1 1770** via content delivery network **1760**.

In the example embodiment of FIG. **17**, the authorization manager **1715** authorizes/authenticate end user **1 1770** (via verification module **1730**) prior to receiving the content stream from content source **1710** (and/or content publisher **1705**) so that the stream delivery module **1725** may deliver the content stream to end user **1 1770** with further authorization processing by verification module **1730**. According to another example embodiment, the end user **1 1770** may be verified on-the-fly as the content stream is received by the authorization manager **1715** such that the content stream is received by the stream intake module **1720** prior to end user authorization.

It should be noted that, in the example embodiment of FIG. **17**, the authorization manager **1715** is shown with a stream intake module **1720** and stream delivery module **1725**. According to additional embodiments, the authorization manager **1715** does not include such streaming capabilities and would not process the actual content stream as provided by the content source **1710** and/or content publisher **1705**. Instead, the authorization manager **1715** would provide authentication/authorization services and then, upon verification, the authorization manager **1715** would initiate delivery of the content stream to end user **1 1770** via another entity, such as content delivery manager **935**, **1015**, and/or **1150**.

The verification module **1730** can initiate authorization of end user **1 1770** by either receiving a request for authorization **1772** from end user **1 1770**, or by proactively soliciting a request for authorization **1774** (or soliciting information necessary to authorize end user **1 1770**) if, for example, the content stream has already arrived at the authorization manager **1715**.

According to an example embodiment, the verification module **1730** can first determine whether the end user **1 1770** is authorized to receive delivery of the content stream by querying local end user repository **1740** (via data storage module **1735**). End user data repository **1740** is populated with subscription data for end users associated with authorization manager **1715**. In this manner, the end user data repository **1740** is progressively updated with subscription data each time the verification module **1730** receives information from subscription database **1750**.

For purposes of example only, the end user data repository **1740** stores both session information and proximity parameters related to each end user associated with authorization manager **1715**. Note that the end user data repository **1740** may store different parameters and/or information related to each end user in addition to, or in lieu of the parameters and information shown in the example embodiment of FIG. **17**.

The session information indicates that, for each applicable end user (end user **1**, end user **2**, end user **5**, . . . end user M), the authorization manager **1715** initiated delivery of a content stream (CS_1, CS_2, CS_4, CS_Y) at a respective time (T_1, T_3, T_7, . . . T_X). Delivery of a specific content stream at a respective time represents a "session."

Still referring to the end user data repository **1740**, the proximity parameters column indicates an Internet Protocol "IP" address associated with each applicable end user (e.g., end user **1**=IP_1, end user **2**=IP_2, end user **5**=IP_5, . . . end user M=IP_M). The proximity parameters may be used in furtherance of authenticating/authorizing an end user for purposes of geo-filtering/geo-blocking.

For example, assume that the end user data repository **1740** indicates that end user **1 1770** is already receiving content stream as part of an earlier-initiated session for that particular content stream. In one embodiment, the authorization manager **1715** can deny access to the end user **1 1770** since the end user had already requested delivery of that particular content stream as evidenced by the session information. By denying access in this manner, the authorization manager **1715** can prevent unscrupulous users (e.g., hackers, spoofers, etc.) from trying to gain unauthorized access to content streams.

Continuing with the same example, the authorization manager **1715** can alternatively grant the request by the end user **1 1770** to receive delivery of the content stream. In this manner, the authorization manager **1715** would terminate the earlier-initiated session and initiate a new session with end user **1 1770** for delivery of the content stream in accordance with the second request. By terminating the first session and initiating the second session, the authorization manager **1715** trusts that the second request is authentic (e.g., was actually sent by end user **1 1770**) and that the first session with end user **1 1770** may have been prematurely disconnected or fallen victim to any number of network anomalies.

In response to receiving the request for authorization **1772**, and now assuming that the end user data repository **1740** does not have information (an entry) related to end user **1 1770**, the verification module **1730** queries subscription database **1750** to determine whether end user **1 1770** is authorized to receive delivery of the content stream. As shown, the subscription database contains a table of authorized subscribers (end user **1**, end user **4**, end user **9**, . . . end user N). Since end user **1** is listed as an authorized subscriber in subscription database **1750**, the subscription database would indicate to verification module **1730** that end user **1 1770** is in fact authorized to receive delivery of the content stream.

Note that the subscription database **1750** associated with content publisher **1705** may only contain subscription information related to non-Internet services such as satellite television services, cable television services, and the like. As such, and in accordance with embodiments herein, the subscription database **1750** is capable of authorizing end user for web-based delivery of content such that the content publisher **1705** does not have to create (or modify existing) subscription database specific to Internet, or web-based services.

FIG. **18** is a schematic diagram of a computer system **1800** upon which embodiments of the present invention may be carried out and implemented. For example, one or more computing devices **1800** may be used to manage and/or administer the streaming of content across one or more networks (e.g., the Internet, content delivery networks (CDNs), and the like).

According to the present example, the computer system **1800** includes a bus **1801** (i.e., interconnect), at least one processor **1802**, at least one communications port **1803**, a main memory **1804**, a removable storage media **1805**, a read-only memory **1806**, and a mass storage **1807**. Processor(s) **1802** can be any known processor, such as, but not limited to, an Intel® Itanium® or Itanium 2® processor(s), AMD® Opteron® or Athlon MP® processor(s), or Motorola® lines of processors. Communications ports **1803** can be any of an RS-232 port for use with a modem based dial-up connection, a 10/100 Ethernet port, a Gigabit port using copper or fiber, or a USB port. Communications port(s) **1803** may be chosen

depending on a network such as a Local Area Network (LAN), a Wide Area Network (WAN), or any network to which the computer system **100** connects (e.g., content deliver/network **950**, **1045**, **1650**, and/or **1760**). The computer system **1800** may be in communication with peripheral devices (e.g., display screen **1830**, input device **1816**) via Input/Output (I/O) port **1809**.

Main memory **1804** can be Random Access Memory (RAM), or any other dynamic storage device(s) commonly known in the art. Read-only memory **1806** can be any static storage device(s) such as Programmable Read-Only Memory (PROM) chips for storing static information such as instructions for processor **1802**. Mass storage **1807** can be used to store information and instructions. For example, hard disks such as the Adaptec® family of Small Computer Serial Interface (SCSI) drives, an optical disc, an array of disks such as Redundant Array of Independent Disks (RAID), such as the Adaptec® family of RAID drives, or any other mass storage devices may be used.

Bus **101** communicatively couples processor(s) **1802** with the other memory, storage and communications blocks. Bus **1801** can be a PCI/PCI-X, SCSI, or Universal Serial Bus (USB) based system bus (or other) depending on the storage devices used. Removable storage media **1805** can be any kind of external hard-drives, floppy drives, IOMEGA® Zip Drives, Compact Disc-Read Only Memory (CD-ROM), Compact Disc-Re-Writable (CD-RW), Digital Video Disk-Read Only Memory (DVD-ROM), etc.

Embodiments herein may be provided as a computer program product, which may include a machine-readable medium having stored thereon instructions, which may be used to program a computer (or other electronic devices) to perform a process. The machine-readable medium may include, but is not limited to, floppy diskettes, optical discs, CD-ROMs, magneto-optical disks, ROMs, RAMs, erasable programmable read-only memories (EPROMs), electrically erasable programmable read-only memories (EEPROMs), magnetic or optical cards, flash memory, or other type of media/machine-readable medium suitable for storing electronic instructions. Moreover, embodiments herein may also be downloaded as a computer program product, wherein the program may be transferred from a remote computer to a requesting computer by way of data signals embodied in a carrier wave or other propagation medium via a communication link (e.g., modem or network connection).

As shown, main memory **1804** is encoded with authorization manager application **1850-1** that supports functionality as discussed above and as discussed further below. Authorization manager application **1850-1** (and/or other resources as described herein) can be embodied as software code such as data and/or logic instructions (e.g., code stored in the memory or on another computer readable medium such as a disk) that supports processing functionality according to different embodiments described herein. During operation of one embodiment, processor(s) **1802** accesses main memory **1804** via the use of bus **1801** in order to launch, run, execute, interpret or otherwise perform the logic instructions of the authorization manager application **1850-1**. Execution of authorization manager application **1850-1** produces processing functionality in authorization manager process **1850-2**. In other words, the authorization manager process **1850-2** represents one or more portions of the authorization manager application **1850-1** performing within or upon the processor(s) **1802** in the computer system **1800**.

It should be noted that, in addition to the authorization manager process **1850-2** that carries out method operations as discussed herein, other embodiments herein include the authorization manager application **1850-1** itself (i.e., the unexecuted or non-performing logic instructions and/or data). The authorization manager application **1850-1** may be stored on a computer readable medium (e.g., a repository) such as a floppy disk, hard disk or in an optical medium. According to other embodiments, the authorization manager application **1850-1** can also be stored in a memory type system such as in firmware, read only memory (ROM), or, as in this example, as executable code within the main memory **1804** (e.g., within Random Access Memory or RAM). For example, authorization manager application **1850-1** may also be stored in removable storage media **1805**, read-only memory **1806**, and/or mass storage device **1807**.

In addition to these embodiments, it should also be noted that other embodiments herein include the execution of the authorization manager application **1850-1** in processor(s) **1802** as the authorization manager process **1850-2**. Thus, those skilled in the art will understand that the computer system **1800** can include other processes and/or software and hardware components, such as an operating system that controls allocation and use of hardware resources.

It should be noted that the authorization manager **1635** in FIG. **16**, the authorization manager **1715** in FIG. **17**, and the authorization manager **1850** (i.e., authorization manager application **1850-1** and authorization manager process **1850-2**) in FIG. **18** each have the same or similar functionality, capabilities, and features as described with regard to their respective figures and embodiments.

As discussed herein, embodiments of the present invention include various steps or operations. A variety of these steps may be performed by hardware components or may be embodied in machine-executable instructions, which may be used to cause a general-purpose or special-purpose processor programmed with the instructions to perform the operations. Alternatively, the steps may be performed by a combination of hardware, software, and/or firmware.

FIGS. **19-22** include flowcharts according to embodiments herein. The rectangular elements are herein denoted as "steps" and represent computer software instructions or groups of instructions that carry out such functions. The flow diagrams do not necessarily depict the syntax of any particular programming language. Rather, the flow diagrams illustrate the functional information one of ordinary skill in the art could use to fabricate circuits or to generate computer software (or a hybrid of both circuits and software code) to carry out the features as described herein.

It should be noted that many routine program elements, such as initialization of loops and variables and the use of temporary variables are inherent in the flowcharts. It will be appreciated by those of ordinary skill in the art that unless otherwise indicated herein, the particular sequence of steps described is illustrative only and can be varied without departing from the spirit of the invention. Thus, unless otherwise stated the steps described below are unordered meaning that, when possible, the steps can be performed in any convenient or desirable order.

Now, more specifically, FIG. **19** is a flow chart **1900** of processing steps that shows processing operations performed by the authorization manager **1850** (i.e., authorization manager application **1850-1** and/or the run-time implementation of authorization manager process **1850-2**) in accordance with one example embodiment.

In step **1905**, the authorization manager **1850** receives a request from the end user for delivery of the video stream to the end user across a network. For example, the request

received from the user may be in response to a solicitation or request for authorization information previously sent to the end user.

In step **1910**, the authorization manager **1850** queries a subscription database associated with the content publisher. For example, the subscription database may include subscription information related to traditional satellite television services, cable television services, and the like.

In step **1915**, the authorization manager **1850** processes a reply from the subscription database to determine whether the end user has authorization to receive delivery of the video stream.

In step **1920**, the authorization manager **1850** transmits a notification to the end user indicating that the end user is not authorized to receive delivery of the video stream based on the processing of the reply from the subscription database.

In step **1925**, the authorization manager **1850** initiates delivery of the video stream to the end user based on the processing of the reply from the subscription database. The reply from the subscription database can indicate that the end user is authorized to receive delivery of the video stream. For instance, the end user may be authorized to receive delivery of the web-based video stream since the end user is already authorized to receive satellite and/or cable television services.

FIG. **20** is a flow chart **2000** of processing steps that shows processing operations performed by the authorization manager **1850** in accordance with one example embodiment.

In step **2005**, the authorization manager **1850** receives a request from the end user.

In step **2010**, the authorization manager **1850** receives metadata from the end user (e.g., token, cookie, etc.). For example, the end user may have received the token and/or cookie from a third party authorization service associated with the content publisher. In this manner, the authorization manager **1850** does not necessarily have to query a subscription database to determine whether the end user is authorized to receive delivery of the video stream.

In step **2015**, the authorization manager **1850** processes the metadata (e.g., cookie and/or token) to identify a content publisher associated with the end user.

In step **2020**, the authorization manager **1850** determines whether the content publisher associated with the video stream is the same as the content publisher associated with the end user. For example, if it is determined from the metadata (e.g., token and/or cookie) that the end user is already authorized to receive delivery of content from the content publisher associated with the video stream, then the authorization manager **1850** initiates delivery of the content stream to the end user.

FIG. **21** is a flow chart **2100** of processing steps that shows processing operations performed by the authorization manager **1850** in accordance with one example embodiment.

In step **2105**, the authorization manager **1850** receives a request from the end user for delivery of the video stream to the end user across a network.

In step **2110**, the authorization manager **1850** processes proximity parameters associated with the end user. For example, the proximity parameters can specify a geographic location of the end user to where video content is transmitted.

In step **2115**, the authorization manager **1850** determines that the end user is not authorized to receive the video stream. Such a determination can be based on the processing of the proximity parameters (e.g., as part of a geo-filtering and/or geo-blocking regime).

In step **2120**, and given a relative time associated with the receipt of the request from the end user, the authorization manager **1850** determines whether the video stream should be blacked out for at least a time period associated with the relative time in relation to the geographic location of the end user.

In step **2125**, the authorization manager **1850** restricts delivery of the video stream to the end user.

In step **2130**, the authorization manager **1850** restricts delivery of the video stream to the end user in accordance with black out rules associated with the content publisher. In this manner, the black out rules have associated time restrictions and geographic restrictions prescribed by the content publisher for the end user.

In step **2135**, the authorization manager **1850** restricts delivery of the video stream to the end user in accordance with subscription parameters of the content publisher for a group of end users. For example, the subscription parameters can include a time restriction and/or a geographic restriction. Additionally, in this embodiment the end user is a member of the group of end users to which the subscription parameters apply.

In step **2140**, the authorization manager **1850** terminates the delivery of the video stream to the end user if delivery of the video stream to the end user has already been initiated.

FIG. **22** is a flow chart **2200** of processing steps that shows processing operations performed by the authorization manager **1850** in accordance with one example embodiment.

In step **2205**, the authorization manager **1850** processes the reply from the subscription database to detect whether the end user is a subscriber of the content publisher.

In step **2210**, the authorization manager **1850** stores an entry in a subscriber verification table to indicate that the end user is an authorized subscriber of the content publisher. For instance, in one embodiment, the authorization manager **1850** analyzes a token and/or a cookie associated with the second request received from the second end user.

According to another embodiment, the authorization manager **1850** detects that the end user is not a subscriber of the content publisher. In such a scenario, the authorization manager **1850** stories an entry in the subscriber verification table to indicate that the end user is not an authorized subscriber of the content publisher. The authorization manager **1850** can also transmit a notification to the end user to indicate that the end user is not authorized to receive delivery of the video stream. As such, the authorization manager **1850** would specify in the notification that the end user is not an authorized subscriber of the content publisher from which the end user had requested delivery of the video stream.

In step **2215**, the authorization manager **1850** receives a second request from a second end user for delivery of the video stream to the second end user.

In step **2220**, the authorization manager **1850** processes the second request to determine that the second end user is authorized to receive delivery of the video stream.

In step **2225**, the authorization manager **1850** determines that the second end user is the same as the end user. Such a determination is made so as to prevent unauthorized access to video streams by the unscrupulous users (e.g., hackers, spoofers, etc.).

In step **2230**, and in response to querying the subscriber verification table, the authorization manager **1850** determines that the second end user is an authorized subscriber of the content publisher.

In step **2235**, the authorization manager **1850** initiates delivery of the video stream to the second user. For example, the authorization manager **1850** may initiate delivery of the content stream to the end user via a content delivery network.

In step **2240**, the authorization manager **1850** stores session information in the subscriber verification table. The ses-

sion information is associated with the delivery of the video stream to the end user. Furthermore, the session information is stored in accordance with a relative time at which the request from the end user was received.

In accordance with another example embodiment, the authorization manager **1850** receives a request from the end user for delivery of the video stream to the end user across a network. In response, the authorization manager **1850** queries a subscription database associated with the content publisher and, then, processes a reply from the subscription database to determine whether the end user has authorization to receive delivery of the video stream.

As an example, if the end user is determined to have authorization to receive delivery of the video stream, the authorization manager **1850** creates an entry in a subscriber verification table specifying that the end user is an authorized subscriber of the content publisher. The entry can specify, for example, session information associated with delivery of the video stream to the end user. Furthermore, the session information is stored in accordance with a relative time at which the request from the end user was received. Having determined that the end user is authorized, the authorization manager **1850** initiates delivery of the video stream to the end user.

Although the present invention has been described with reference to various embodiments, it will be understood that the invention is not limited to the details thereof. Various modifications and substitutions will occur to those of ordinary skill in the art. All such substitutions are intended to be embraced within the scope of the invention as defined in the appended claims.

What is claimed is:

1. A computer-implemented method for authorizing delivery of a video stream to an end user, wherein the video stream is associated with a content publisher, the method comprising:

receiving a request from the end user for delivery of the video stream to the end user across a network;

querying a subscription database associated with the content publisher;

in response, processing a reply from the subscription database to determine whether the end user has authorization to receive delivery of the video stream; and

performing at least one of:

transmitting a notification to the end user indicating that the end user is not authorized to receive delivery of the video stream based on the processing of the reply from the subscription database; and

initiating delivery of the video stream to the end user based on the processing of the reply from the subscription database, wherein the reply from the subscription database indicates the end user is authorized to receive delivery of the video stream.

2. The computer-implemented method as in claim **1**, wherein receiving a request from the end user comprises:

receiving metadata from the end user;

processing the metadata to identify a content publisher associated with the end user; and

determining whether the content publisher associated with the video stream is the same as the content publisher associated with the end user.

3. The computer-implemented method as in claim **2**, wherein the metadata is at least one of a token and a cookie.

4. The computer-implemented method as in claim **1** further comprising:

processing proximity parameters associated with the end user, wherein the proximity parameters specify a geographic location of the end user to where video content is transmitted;

based on the processing of the proximity parameters, determining that the end user is not authorized to receive the video stream; and

restricting delivery of the video stream to the end user.

5. The computer-implemented method as in claim **4**, wherein determining that the end user is not authorized to receive the video stream comprises:

given a relative time associated with the receipt of the request from the end user, determining whether the video stream should be blacked out for at least a time period associated with the relative time in relation to the geographic location of the end user.

6. The computer-implemented method of claim **4**, wherein restricting delivery of the video stream to the end user is in accordance with black out rules associated with the content publisher, the black out rules having associated time restrictions and geographic restrictions prescribed by the content publisher for the end user.

7. The computer-implemented method of claim **4**, wherein restricting delivery of the video stream to the end user is in accordance with subscription parameters of the content publisher for a group of end users, the subscription parameters including at least one of a time restriction and a geographic restriction, and wherein the end user is a member of the group of end users to which the subscription parameters apply.

8. The computer-implemented method as in claim **4**, wherein restricting delivery of the video stream comprises:

terminating the delivery of the video stream to the end user if delivery of the video stream to the end user has already been initiated.

9. The computer-implemented method as in claim **1**, wherein processing the reply from the subscription database comprises detecting that the end user is not a subscriber of the content publisher, the method further comprising:

in a subscriber verification table, storing an entry indicating that the end user is not an authorized subscriber of the content publisher, and

wherein transmitting a notification to the end user indicating that the end user is not authorized to receive delivery of the video stream comprises:

specifying in the notification that the end user is not an authorized subscriber of the content publisher from which the end user had requested delivery of the video stream.

10. The computer-implemented method as in claim **1**, wherein processing the reply from the subscription database comprises detecting that the end user is a subscriber of the content publisher, the method further comprising:

in a subscriber verification table, storing an entry indicating that the end user is an authorized subscriber of the content publisher.

11. The computer-implemented method of claim **10** further comprising:

receiving a second request from a second end user for delivery of the video stream to the second end user;

processing the second request to determine that the second end user is authorized to receive delivery of the video stream; and

initiating delivery of the video stream to the second user.

12. The computer-implemented method of claim **11**, wherein processing the second request to determine that the

second end user is authorized to receive delivery of the video stream comprises:

determining that the second end user is the same as the end user; and

in response to querying the subscriber verification table, determining that the second end user is an authorized subscriber of the content publisher.

13. The computer-implemented method of claim **11**, wherein processing the second request to determine that the second end user is authorized to receive delivery of the video stream includes analyzing at least one of a token and a cookie, wherein the at least one of a token and a cookie is associated with the second request received from the second end user.

14. The computer-implemented method of claim **10** further comprising:

in the subscriber verification table, storing session information associated with the delivery of the video stream to the end user, wherein the session information is stored in accordance with a relative time at which the request from the end user was received.

15. A computer-implemented method for authorizing delivery of a video stream to an end user, the video stream being provided by a content source associated with a content publisher, the method comprising:

receiving a request from the end user for delivery of the video stream to the end user across a network;

querying a subscription database associated with the client publisher;

in response, processing a reply from the subscription database to determine whether the end user has authorization to receive delivery of the video stream;

if the end user is determined to have authorization to receive delivery of the video stream, creating an entry in a subscriber verification table specifying that the end user is an authorized subscriber of the content publisher, wherein the entry further specifies session information associated with delivery of the video stream to the end user, the session information being stored in accordance with a relative time at which the request from the end user was received; and

initiating delivery of the video stream to the end user.

16. A system configured to authorize delivery of a video stream to an end user, wherein the video stream is associated with a content publisher, the system comprising:

a network;

a subscription database accessible via the network;

a content server configured to receive a request from the end user for delivery of the video stream to the end user across the network;

wherein the content server is configured to query the subscription database associated with the content publisher;

wherein the content server is further configured to process a reply from the subscription database to determine whether the end user has authorization to receive delivery of the video stream; and

wherein the content server is configured to perform at least one of:

transmitting a notification to the end user indicating that the end user is not authorized to receive delivery of the video stream based on the processing of the reply from the subscription database; and

initiating delivery of the video stream to the end user based on the processing of the reply from the subscription database, wherein the reply from the subscription database indicates the end user is authorized to receive delivery of the video stream.

17. The system as in claim **16** further comprising:

proximity parameters associated with the end user, wherein the proximity parameters specify a geographic location of the end user to where video content is transmitted;

wherein the content server is configured to process the proximity parameters to determine whether the end user is authorized to receive the video stream; and

wherein a determination that the end user is not authorized to receive the video stream comprises:

given a relative time associated with the receipt of the request from the end user, determining whether the video stream should be blacked out for at least a time period associated with the relative time in relation to the geographic location of the end user.

18. The system as in claim **17** further comprising:

wherein the content server is configured to restrict delivery of the video stream to the end user in accordance with black out rules associated with the content publisher, the black out rules having associated time restrictions and geographic restrictions prescribed by the content publisher for the end user; and

based on the black out rules, the content server is further configured to terminate the delivery of the video stream to the end user if delivery of the video stream to the end user has already been initiated.

19. The system as in claim **16** further comprising:

a subscriber verification table;

if the end user is determined to be an authorized subscriber of the content publisher, the content server is configured to store an entry in the subscriber verification table indicating that the end user is an authorized subscriber of the content publisher, wherein the entry further includes session information associated with the delivery of the video stream to the end user, the session information being stored in accordance with a relative time at which the request from the end user was received.

20. The system as in claim **16** further comprising:

a subscriber verification table;

if the end user is determined not to be an authorized subscriber of the content publisher, the content server is configured to store an entry in the subscriber verification table indicating that the end user is not an authorized subscriber of the content publisher, and

wherein the content server is configured to specify in the notification that the end user is not an authorized subscriber of the content publisher from which the end user had requested delivery of the video stream.

* * * * *