US 20070034906A1

(19) United States

(12) Patent Application Publication

(10) Pub. No.: US 2007/0034906 A1

(43) Pub. Date: Feb. 15, 2007

Wang et al.

(54) MOS DEVICES WITH REDUCED RECESS ON SUBSTRATE SURFACE

(75) Inventors: **Chih-Hao Wang**, Hsin-Chu (TW); **Ta-Wei Wang**, Taipei (TW)

Correspondence Address:
SLATER & MATSIL, L.L.P.
17950 PRESTON ROAD, SUITE 1000
DALLAS, TX 75252 (US)

(73) Assignee: **Taiwan Semiconductor Manufacturing Company, Ltd.**

(21) Appl. No.: **11/320,012**

(22) Filed: **Dec. 27, 2005**

Related U.S. Application Data

(60) Provisional application No. 60/707,084, filed on Aug. 10, 2005.

Publication Classification

(51) **Int. Cl.**
H01L 29/768 (2006.01)

(52) **U.S. Cl.** **257/224**

(57) **ABSTRACT**

A MOS device having reduced recesses under a gate spacer and a method for forming the same are provided. The MOS device includes a gate structure overlying the substrate, a sidewall spacer on a sidewall of the gate structure, a recessed region having a recess depth of substantially less than about 30 Å underlying the sidewall spacer, and a silicon alloy region having at least a portion in the substrate and adjacent the recessed region. The silicon alloy region has a thickness of substantially greater than about 30 nm. A shallow recess region is achieved by protecting the substrate when a hard mask on the gate structure is removed. The MOS device is preferably a pMOS device.

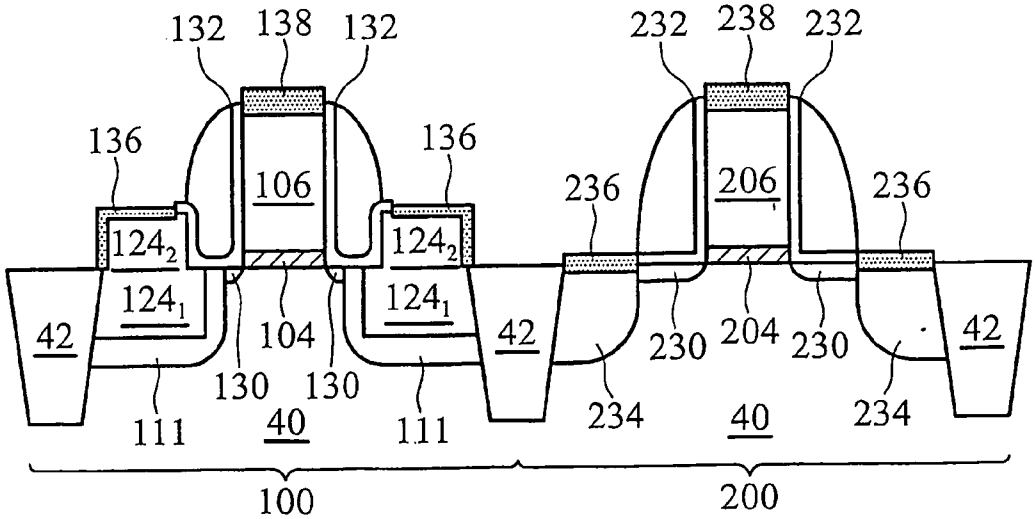

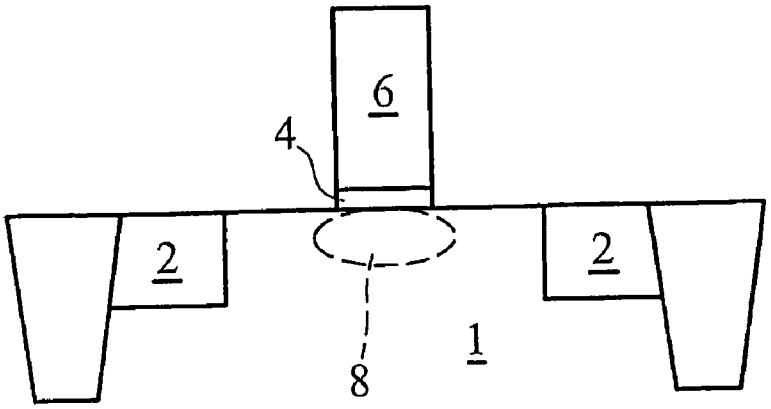

FIG. 1 (PRIOR ART)

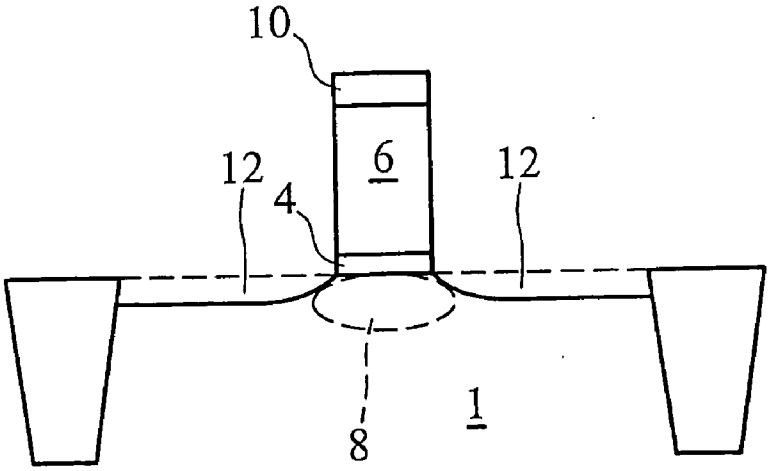

FIG. 2 (PRIOR ART)

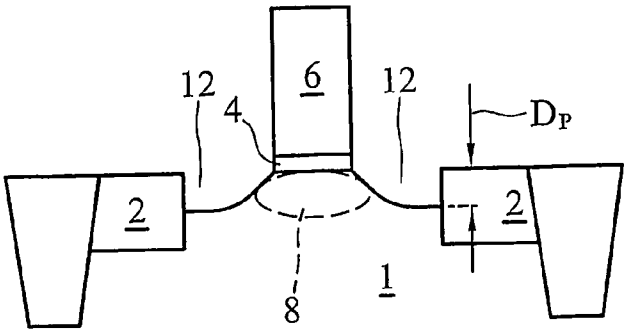

FIG. 3 (PRIOR ART)

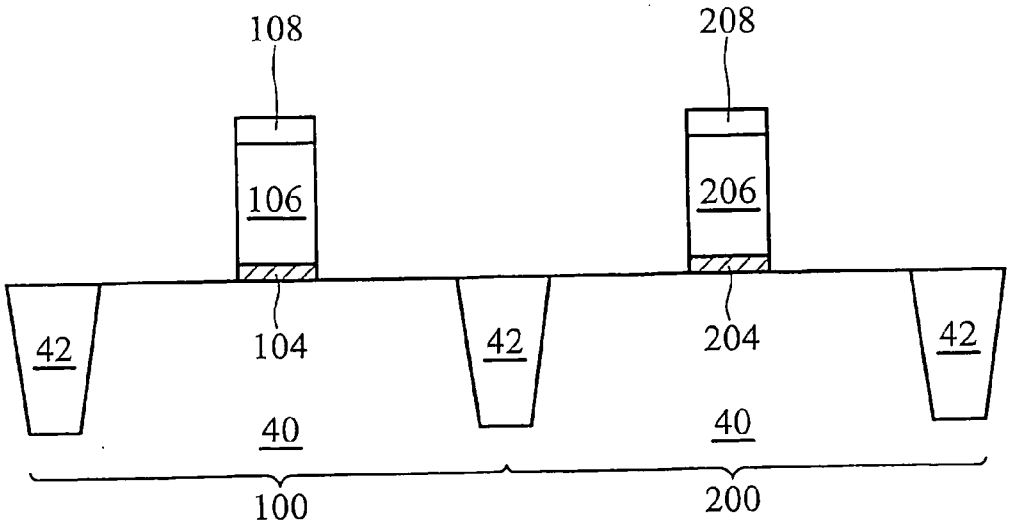

FIG. 4

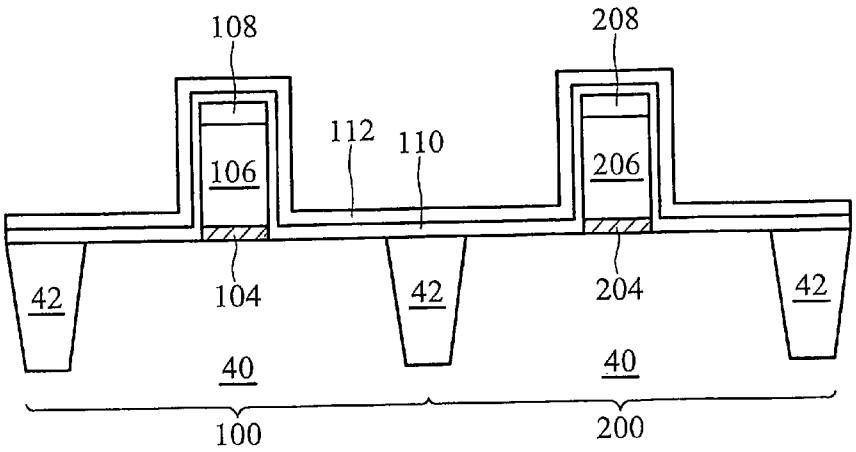
108
208
112
110
106
206
42
104
42
204
42
40
40
100
200

FIG. 5

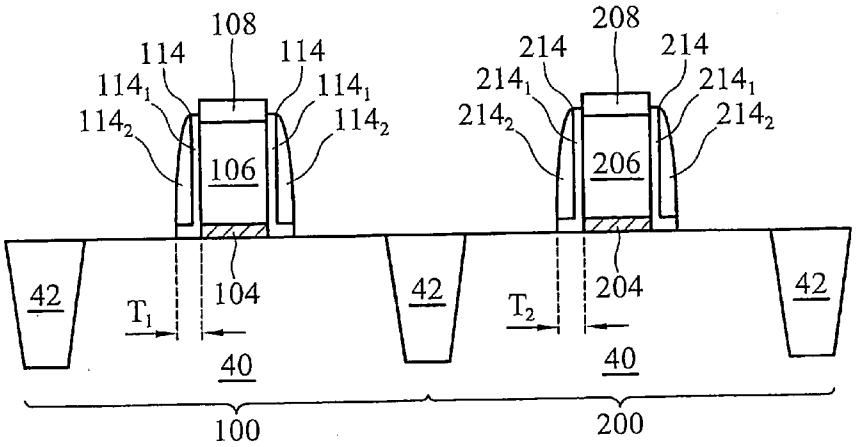
108
208
114
114
214
214
114₁
114₁
214₁
214₁
114₂
114₂
214₂
214₂
106
206
42
T₁
104
42
T₂
204
42
40
40
100
200

FIG. 6

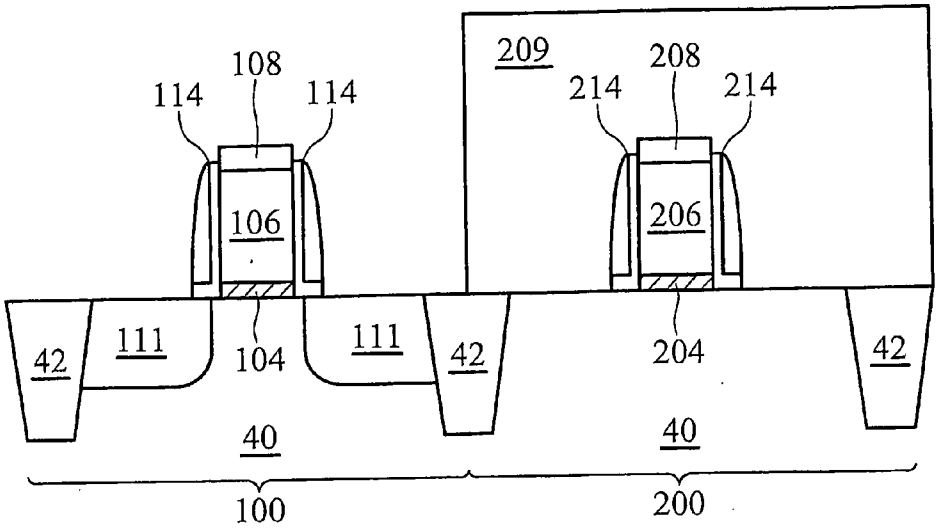
108
114
114
209
208
214
214
106
206
42
111
104
111
42
204
42
40
40
100
200

FIG. 7

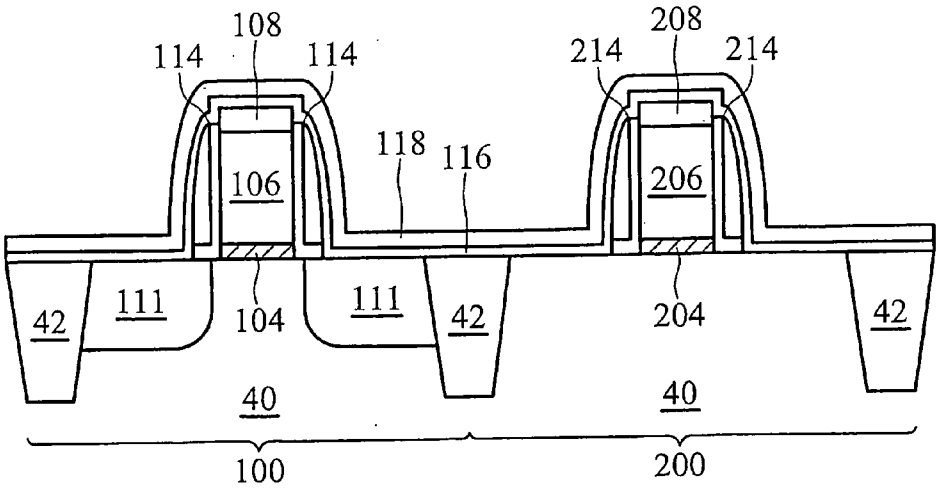
108
114
114
208
214
214
118
116
106
206
42
111
104
111
42
204
42
40
40
100
200

FIG. 8

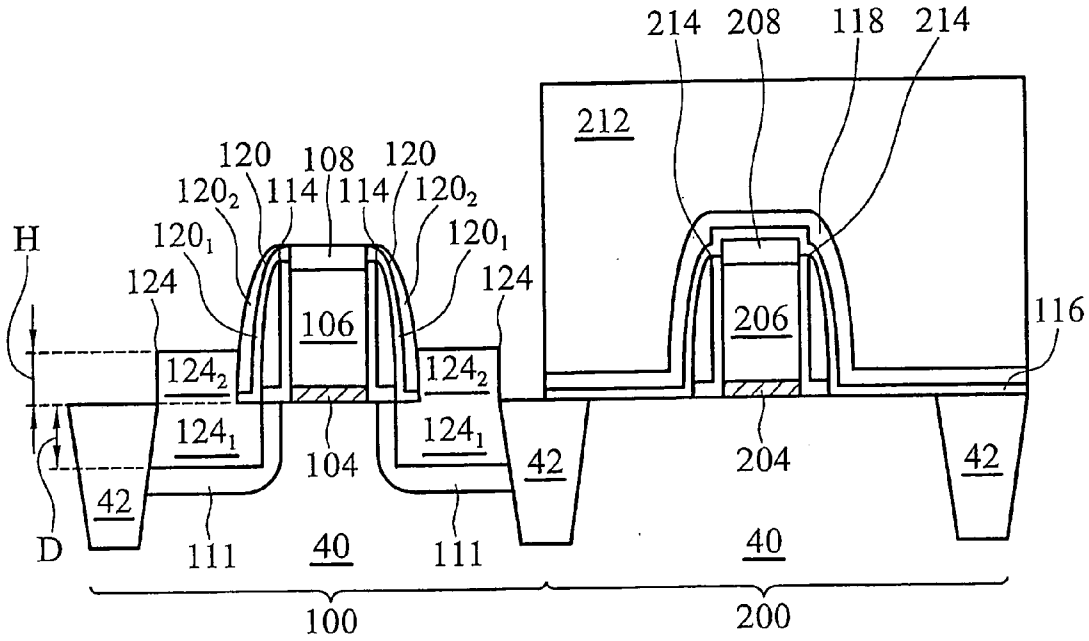
214
208
118
214
212
120
108
120
120_2
114
114
120_2
H
120_1
120_1
124
124
106
206
116
124_2
124_2
124_1
124_1
104
42
204
42
42
D
111
40
111
40
100
200

FIG. 9

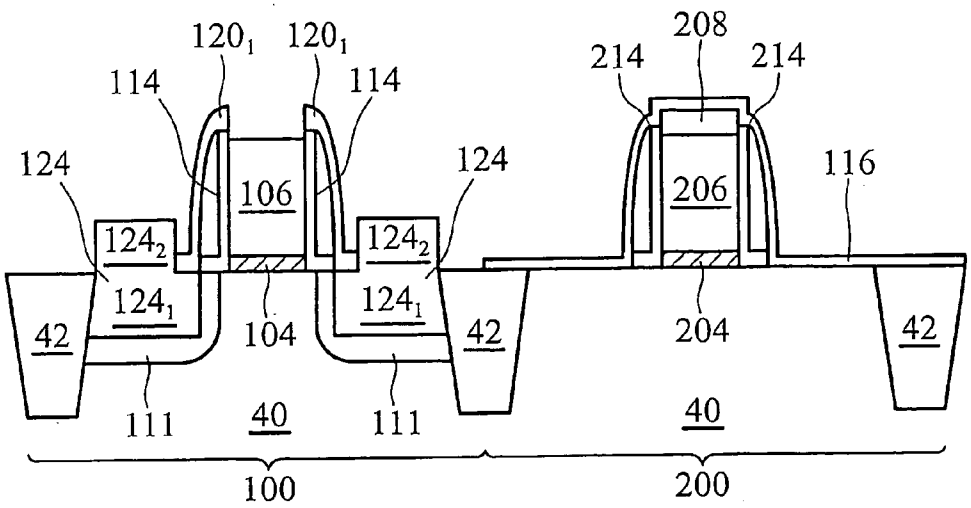
120_1
120_1
208
214
214
114
114
124
124
106
206
116
124_2
124_2
124_1
124_1
42
104
42
204
42
111
40
111
40
100
200

FIG. 10

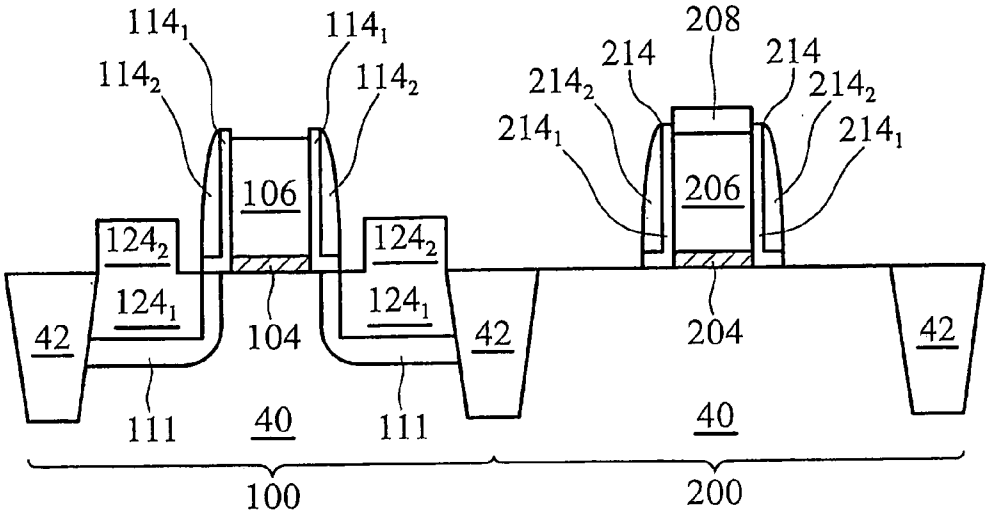
114₁
114₁
114₂
114₂
208
214
214
214₂
214₂
214₁
214₁
106
206
124₂
124₂
124₁
124₁
42
104
42
204
42
111
40
111
40
100
200

FIG. 11

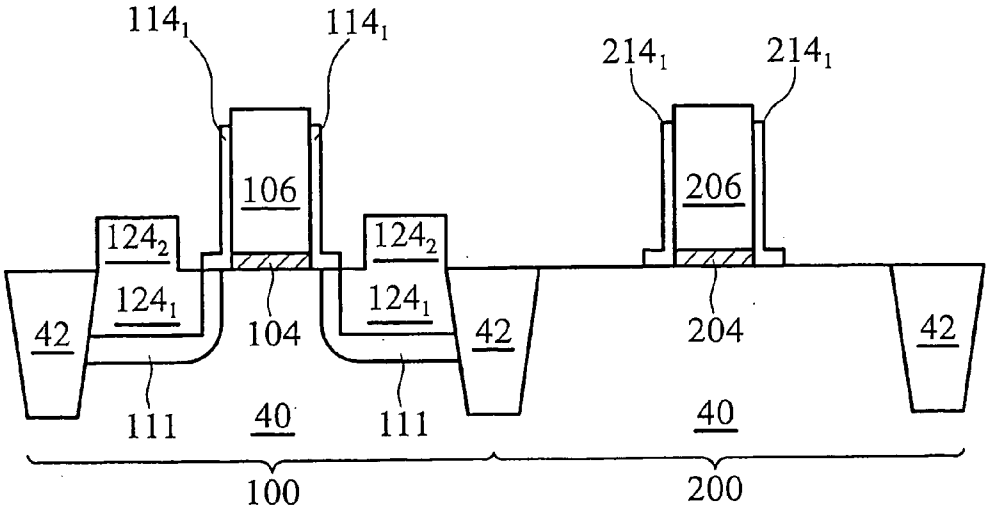
114₁
114₁
214₁
214₁
106
206
124₂
124₂
124₁
124₁
42
104
42
204
42
111
40
111
40
100
200

FIG. 12

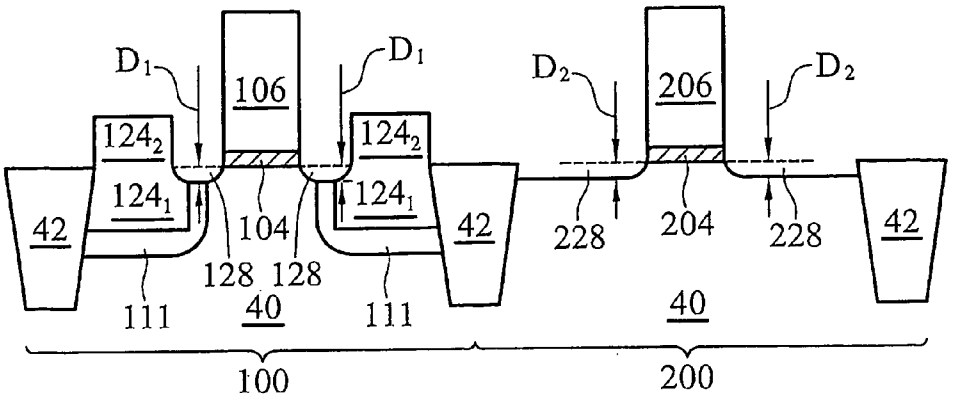
D1
D1
D2
D2
106
206
124₂
124₂
124₁
124₁
42
42
42
104
128
128
228
204
228
111
40
111
40
100
200

FIG. 13

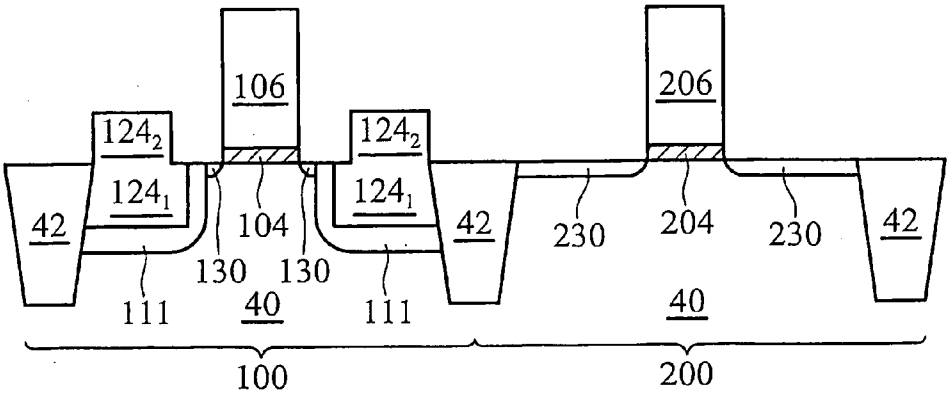
106
206
124₂
124₂
124₁
124₁
42
42
42
104
130
130
230
204
230
111
40
111
40
100
200

FIG. 14

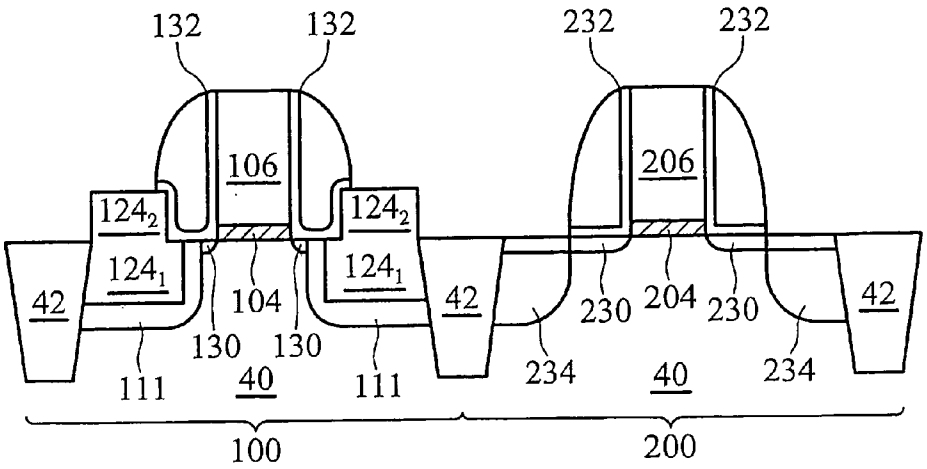
132
132
232
232
106
206
124_2
124_2
124_1
124_1
42
42
42
104
130
130
230
204
230
111
40
111
234
40
234
100
200

FIG. 15

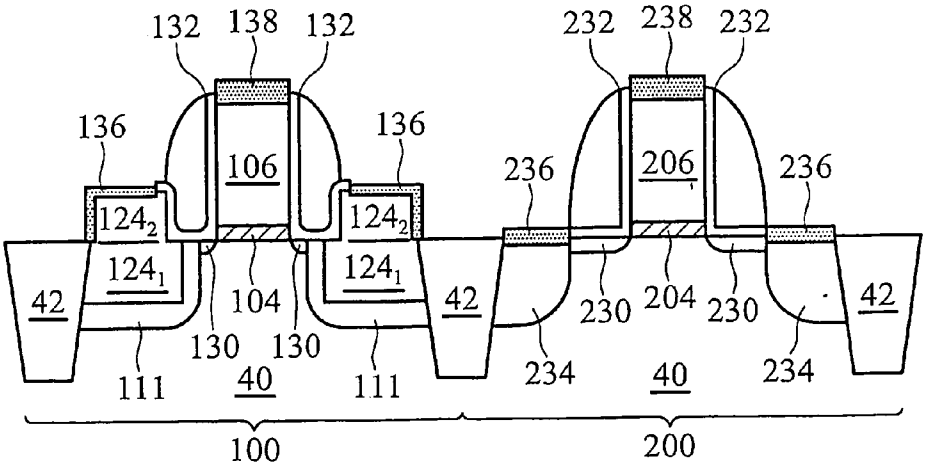
132
138
132
232
238
232
136
136
106
236
206
236
124_2
124_2
124_1
124_1
42
42
42
104
130
130
230
204
230
111
40
111
234
40
234
100
200

FIG. 16

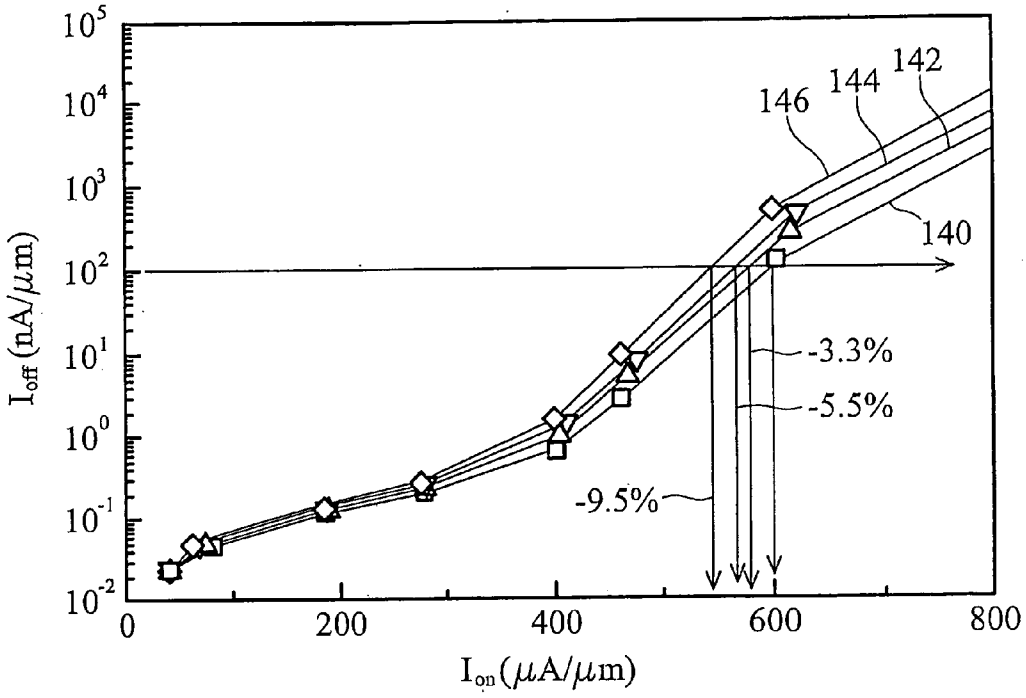
10^5
10^4
10^3
10^2
10^1
10^0
10^{-1}
10^{-2}
I_{off} (nA/μm)
0
200
400
600
800
I_{on} (μA/μm)
146
144
142
140
-3.3%
-5.5%
-9.5%

FIG. 17

MOS DEVICES WITH REDUCED RECESS ON SUBSTRATE SURFACE

[0001] This application claims priority to provisional patent application ser. no. 60/707,084, filed on Aug. 10, 2005, entitled "Scalable High Performance MOSFETs with High Strain," which application is hereby incorporated herein by reference.

TECHNICAL FIELD

[0002] This invention relates generally to semiconductor devices, and more particularly to metal-oxide-semiconductor (MOS) devices, and even more particularly to the structure and fabrication methods of MOS devices having highly-stressed channel regions.

BACKGROUND

[0003] The scaling of VLSI circuits is a constant effort. With circuits become smaller and faster, improvement of device driving current becomes more important. Metal-oxide-semiconductor (MOS) transistor current is closely related to gate length, gate capacitance, and carrier mobility in the channel region. Shortening poly-gate length, increasing gate capacitance and increasing carrier mobility can improve the device currents of MOS devices. Gate length reduction is an ongoing effort in order to shrink circuit size. Increasing gate capacitance has also been achieved by efforts such as reducing the gate dielectric thickness, increasing the gate dielectric constant, and the like. In order to further improve device current, enhancing carrier mobility has also been explored.

[0004] Among efforts made to enhance carrier mobility, forming a stressed channel region is a known practice. Stress, sometimes referred to as strain, can enhance electron and hole mobility. The performance of a MOS device can be enhanced through a stressed-surface channel. This technique allows performance to be improved at a constant gate length, without adding complexity to circuit fabrication or design. Research has revealed that a tensile stress in the channel length direction can improve nMOS performance, and a compressive stress in the channel length direction can improve pMOS device performance.

[0005] A commonly used structure for applying compressive stress to the channel region of a pMOS device is shown in FIG. **1**. A gate stack including a gate dielectric **4** and a gate electrode **6** is formed on a silicon substrate **1**. SiGe regions **2** are formed in the substrate **1** with a channel region **8** therebetween. Typically, the formation of the SiGe regions **2** includes forming recesses in the silicon substrate **1** and epitaxially growing SiGe (with desired impurities) in the recesses. Since SiGe has a greater lattice constant then silicon, SiGe regions **2** press on the channel region **8**, so that a compressive stress is developed in the channel region **8**.

[0006] FIGS. **2** and **3** illustrate intermediate stages in the fabrication of the gate stack shown in FIG. **1**. Typically, to form the gate stack, stacked layers, which include a gate dielectric layer, a gate electrode layer and a hard mask layer, are formed on the substrate **1**. The stacked layers are then patterned to form gate dielectric **4**, gate electrode **6**, and hard mask **10**. Hard masks have been extensively used in the formation of pMOS devices having SiGe regions. The patterning step may cause recesses **12** to be formed on the surface of the silicon substrate **1**. In subsequent steps, as shown in FIG. **3**, SiGe regions **2** are formed and the hard mask **10** is removed. Typically, the hard mask **10** comprises silicon nitride and is preferably removed using $H_3PO_4 \cdot H_3PO_4$ attacks silicon substrate **1** and results in deepened recesses **12**. In prior art pMOS devices, if the hard mask is removed by H_3PO_4 after epitaxially growing SiGe regions **2**, the depth D_p of the recesses **12** is easily greater than about 30 Å, and even achieving a depth of only 30 Å is difficult.

[0007] When doped SiGe regions are formed in pMOS devices, the impurities in the SiGe are more prone to diffusion during subsequent thermal processes. Diffused impurities deepen junction depths and compensate for pocket regions, resulting in the reduction of junction abruptness. Therefore, the short channel effects are adversely affected. If deeper recesses are formed under the spacers, the junction depth will be further increased, and the performance of the pMOS devices will be affected more.

[0008] Therefore, there is the need for a method for forming MOS devices, particularly pMOS devices, with reduced recesses in substrate regions close to the gate structure.

SUMMARY OF THE INVENTION

[0009] The preferred embodiment of the present invention provides a MOS device having reduced recesses under the gate spacer and a method for forming the same.

[0010] In accordance with one aspect of the present invention, the MOS device includes a gate structure overlying a substrate, a sidewall spacer on a sidewall of the gate structure, a recessed region in the substrate having a recess depth of substantially less than about 30 Å underlying the sidewall spacer, and a silicon alloy region having at least a portion in the substrate and adjacent the recessed region. The silicon alloy region has a thickness of substantially greater than about 30 nm. With appropriate etchant and a carefully controlled etching process for forming the gate structure, the depth of the recess is preferably substantially less than about 10 Å.

[0011] In accordance with another aspect of the present invention, the MOS device is a pMOS device. The substrate is preferably a silicon substrate, and the silicon alloy region preferably comprises SiGe. The sidewall spacer preferably extends over a portion of the silicon alloy region.

[0012] In accordance with yet another aspect of the present invention, the method for forming the MOS device includes forming a gate structure overlying a substrate, forming a hard mask overlying the gate structure, forming a first sidewall spacer on a sidewall of the gate structure, forming a silicon alloy region spaced apart from the gate structure in the substrate, and removing the hard mask. At least one portion of the first sidewall spacer protects a surface region of the substrate close to the gate structure during the step of removing the hard mask.

[0013] In accordance with yet another aspect of the present invention, the method for forming the MOS device further includes implanting a doped region in the substrate after the step of forming the first sidewall spacer, and forming a second sidewall spacer on a sidewall of the first sidewall spacer before the step of forming the silicon alloy

region. The doped region bridges a space between the silicon alloy region and a lightly doped drain/source region.

[0014] In accordance with yet another aspect of the present invention, the method for forming the MOS device further includes simultaneously removing an upper portion of the second sidewall spacer when the hard mask is removed, removing a lower portion of the second sidewall spacer, and simultaneously removing an upper portion of the first sidewall spacer when a hard mask on an additional gate structure of an additional MOS device is removed. Preferably, the hard mask and the upper portions of the first and second sidewall spacers are formed of similar materials. More preferably, they are formed of silicon nitride.

[0015] With the depth of the recesses in the substrate reduced, the junction depth of the MOS device is reduced, resulting in improved short channel effects and higher device drive currents.

BRIEF DESCRIPTION OF THE DRAWINGS

[0016] For a more complete understanding of the present invention, and the advantages thereof, reference is now made to the following descriptions taken in conjunction with the accompanying drawings, in which:

[0017] FIG. **1** illustrates a portion of a typical pMOS device comprising SiGe regions to apply a compressive stress to the channel region;

[0018] FIGS. **2** and **3** are cross-sectional views of intermediate stages in the fabrication of the gate structure of a pMOS device;

[0019] FIGS. **4** through **16** are cross-sectional views of intermediate stages in the fabrication of a preferred embodiment of the present invention; and

[0020] FIG. **17** illustrates simulation results of pMOS devices having different recess depths.

DETAILED DESCRIPTION OF ILLUSTRATIVE EMBODIMENTS

[0021] The making and using of the presently preferred embodiments are discussed in detail below. It should be appreciated, however, that the present invention provides many applicable inventive concepts that can be embodied in a wide variety of specific contexts. The specific embodiments discussed are merely illustrative of specific ways to make and use the invention, and do not limit the scope of the invention.

[0022] The intermediate stages of manufacturing a preferred embodiment of the present invention are illustrated in FIGS. **4** through **16**. Throughout the various views and illustrative embodiments of the present invention, like reference numbers are used to designate like elements.

[0023] FIG. **4** illustrates two gate stacks formed on a substrate **40**, which comprises two regions, a region **100** for forming a pMOS device and a region **200** for forming an nMOS device. The regions **100** and **200** are isolated by shallow trench isolations **42**. The gate stack in the pMOS region **100** includes a gate dielectric **104** and a gate electrode **106**, and the gate stack in the nMOS region **200** includes a gate dielectric **204** and a gate electrode **206**.

[0024] Substrate **40** preferably comprises bulk silicon, but other commonly used materials and structures such as silicon on insulator (SOI) can also be used. An n-well region and a p-well region (not shown) are preferably formed in the regions **100** and **200**, respectively. The gate dielectrics **104** and **204** are preferably formed of high-k materials with a k value greater than about 3.9. The preferred materials include tantalum, lanthanum, hafnium, aluminum, HfO_x, $HfSiO_x$, $HfSiO_xN_y$, AlO_x, LaO_x,$HfAlO_x$, ZrO_2, Al_2O_3, TiO_2, Ta_2O_5, La_2O_3, CeO_2, $Bi_4Si_2O_{12}$, WO_3, Y_2O_3, $LaAlO_3$, $Ba_{1-x}Sr_xTiO_3$, $PbTiO_3$, $BaTiO_3$, $SrTiO_3$, $PbZrO_3$, PST, PZN, PZT, PMN, and combinations thereof. The gate electrodes **106** and **206** preferably comprise metal nitrides such as TiN and TaN, metals such as Mo and Ti, and metal silicides such as $MoSi_x$and $TaSi_xN_y$, and the like. The gate stacks are masked by hard masks **108** and **208**, respectively. In the preferred embodiment, hard masks **108** and **208** are formed of silicon nitride. In alternative embodiments, they are formed of silicon oxynitride, oxide, and the like.

[0025] FIG. **5** illustrates the formation of a first spacer layer formed over pMOS region **100** and nMOS region **200**. In the preferred embodiment, the first spacer layer is a composite layer comprising a lower sub layer **110** and an upper sub layer **112**, which preferably have different etching characteristics. More preferably, the lower sub layer **110** is formed of oxides, thus is interchangeably referred to as a liner oxide layer **110**, and the upper sub layer **112** is formed of silicon nitride, thus is referred to as a nitride layer **112**. In other embodiments, the first spacer layer may have a single or a composite layer comprising oxide, silicon nitride, silicon oxynitride (SiON) and/or other dielectric materials. The first spacer layer may be formed using commonly used techniques, such as plasma enhanced chemical vapor deposition (PECVD), low-pressure chemical vapor deposition (LPCVD), sub-atmospheric chemical vapor deposition (SACVD), etc.

[0026] FIG. **6** illustrates the liner oxide layer **110** and nitride layer **112** patterned to form first spacers **114** and **214** in regions **100** and **200**, respectively. Either wet etching or dry etching may be used for the patterning. The resulting first spacers **114** and **214** each include a liner oxide portion (also referred to as an inner portion) and a nitride portion (also referred to as an outer portion), namely $\mathbf{114}_1$, $\mathbf{114}_2$ and $\mathbf{214}_1$, and $\mathbf{214}_2$, respectively. Preferably, the thicknesses T_1, and T_2 of the respective first spacers **114** and **214** are greater than about 100 Å, and more preferably between about 120 Å and about 300 Å.

[0027] Referring to FIG. **7**, a photo resist **209** is formed to mask region **200**. An implant is performed on region **100**, forming doped regions **111**, which preferably comprise p-type impurities such as boron and BF_2. Doped regions **111** will bridge potential gaps between subsequently formed silicon alloy regions and the gate electrode **106**.

[0028] FIG. **8** illustrates the formation of a second spacer layer comprising sub layers **116** and **118**, which preferably have different etching characteristics. The second spacer sub layers **116** and **118** preferably comprise similar materials as the first spacer sub layers **110** and **112**, respectively. Additionally, sub layer **118** preferably comprises similar materials as the hard masks **108** and **208**.

[0029] Referring to FIG. **9**, a photo resist **212** is formed covering nMOS region **200**. Second spacer sub layers **116**

and **118** in region **100** are then patterned, forming second spacers **120**. Each spacer **120** comprises an inner portion $\mathbf{120}_1$, and an outer portion $\mathbf{120}_2$.

[**0030**] Silicon alloy regions **124** are then formed in region **100**. The silicon alloy regions **124** preferably have a substantially greater lattice constant than the substrate **40**. Preferably, the silicon alloy regions **124** are formed by etching substrate **40** isotropically to form recesses, and epitaxially growing a silicon alloy in the recesses.

[**0031**] The silicon alloy regions **124** preferably extend under the second spacers **120**, and more preferably reach the interface of the respective spacers **114** and **120**. In order to strengthen the compressive stress applied by the silicon alloy regions **124**, the silicon alloy regions **124** preferably outgrow the top surface of the substrate **40**, forming raised portions $\mathbf{124}_2$. The raised portions $\mathbf{124}_2$ preferably have a height H of less than the height of the gate electrode **106**, and more preferably between about 100 Å and about 700 Å. However, the top surface of silicon alloy regions **124** can be substantially leveled with or lower than the top surface of the substrate **40**. The depth D of the silicon alloy regions **124**, which is also the depth of the portions $\mathbf{124}_1$ in the substrate **40**, is preferably greater than about 300 Å, and more preferably greater than about 350 Å, and even more preferably between about 400 Å and 900 Å.

[**0032**] In the preferred embodiment, the substrate **40** is formed of silicon, and the silicon alloy regions **124** are formed of SiGe. Germanium atoms have a greater size than silicon atoms, and the lattice constant of SiGe is greater than that of the silicon substrate. The lattice constant of SiGe can be adjusted by adjusting the percentage of germanium in the SiGe, and the stress applied by the SiGe regions **124** changes accordingly. In other embodiments, the silicon alloy region comprises silicon germanium and other elements such as carbon.

[**0033**] In FIG. **10**, photo resist **212** is removed. An etchant that attacks the hard mask **108** but not the inner spacer portions $\mathbf{120}_1$, and the second spacer sub layer **116** is used to remove the hard mask **108**. Outer spacer portions $\mathbf{120}_2$ and the second spacer sub layer **118** are also removed, preferably simultaneously. In the preferred embodiment, hard mask **108**, spacer portions $\mathbf{120}_2$ and layer **118** are formed of silicon nitride, thus are preferably removed using H_3PO_4. Note that the surface of the substrate **40** is protected by the spacer portions $\mathbf{120}_1$ and layer portion **114**.

[**0034**] Referring to FIG. **11**, spacer $\mathbf{120}_1$ and layer **116** are removed by using an etchant that does not attack the spacer portions $\mathbf{114}_2$ and $\mathbf{214}_2$. In the preferred embodiment wherein the spacer (layer) $\mathbf{120}_1$ and **116** are formed of oxides, HF is used.

[**0035**] FIG. **12** illustrates the removal of the spacer portions $\mathbf{114}_2$ and $\mathbf{214}_2$ and hard mask **208**, preferably using a similar etchant as used for removing the spacer portions $\mathbf{120}_2$. In pMOS region **100**, since the top surface of the silicon substrate **40** is protected by spacer portions $\mathbf{114}_1$, no recesses are formed. Silicon alloy regions **124** are not sensitive to the etchant (H_3PO_4), thus recess formation is minimal. In nMOS region **200**, recesses may be formed in the regions not protected by the spacer portions $\mathbf{214}_1$. However, recesses formed in these regions do not have significant effects on the device performance. The same is true for any recess formed in silicon alloy regions **124**.

[**0036**] The remaining portions $\mathbf{114}_1$ and $\mathbf{214}_1$ of the first spacers are then removed, preferably using HF, as shown in FIG. **13**. The preferred etchant, such as HF, has a much lower etching rate for etching silicon. Additionally, in regions close to the gate electrode **106** and **206**, only over-etching attacks the surface of substrate **40**. Therefore, the resulting recesses, if there are any, are much shallower than in prior art structures. For illustration purposes, recesses **128** and **228** are shown. The depth D_1 of the recesses **128** and depth D_2 of the recesses **228** can easily be less than about 30 Å, and more preferably can (easily) be less than about 10 Å with use of a suitable etchant and a carefully controlled etching process.

[**0037**] Shallower recesses in regions close to the gate electrode **106**, particularly in the regions between the channel region of the resulting pMOS device and the silicon alloy regions **124**, reduce the junction depth and improve the short channel effects. The performance of the pMOS devices is thus improved.

[**0038**] FIG. **14** illustrates the formation of lightly doped drains (LDD) **130** and LDD regions **230** in regions **100** and **200**, preferably by implants introducing n-type and p-type impurities, respectively. LDD regions **230** are substantially aligned with the edges of the gate electrode **206**. When the LDD regions **230** are implanted with n-type impurities, a photo resist (not shown) is formed over and masks the pMOS region **100**. Similarly, the pMOS region **100** is doped with p-type impurities while the nMOS region **200** is masked, forming LDD regions **130**. Note that doped regions **111** bridge the LDD regions **130** and silicon alloy regions **124**.

[**0039**] FIG. **15** illustrates the formation of spacers **132**, **232** and source/drain regions **234**. The spacers **132** and **232** are preferably formed using the method discussed in previous paragraphs. The source/drain regions **234** are then formed in region **200**. The formation details are known in the art, thus are not repeated herein. Note that the source/drain regions for the pMOS device, which comprise regions **111** and doped silicon alloy regions **124**, have already been formed.

[**0040**] Referring to FIG. **16**, a salicide process is performed to form silicide regions **136**, **138** and **236**, **238**. As is known in the art, a salicide process is preferably performed by blanket deposition of an appropriate metal layer, such as titanium, cobalt, nickel, palladium, platinum, erbium, and the like, followed by an annealing step in which the metal reacts with underlying exposed silicon. Un-reacted metal is then removed, preferably with a selective etch process. It is noted that silicide regions **136** comprise a portion substantially higher than the silicide region **236**.

[**0041**] The preferred embodiments of the present invention significantly improve the drive currents of pMOS devices. FIG. **17** illustrates simulation results of pMOS devices having no recess, 25 Å deep recesses, 50 Å deep recesses, and 100 Å deep recesses, wherein leakage currents I_{off} of the pMOS devices are illustrated as functions of drive currents I_{on}. It is found that at the same leakage current, for example, 100 n Å/μm, the drive current of pMOS devices with 25 Å recesses (line **142**) is degraded by about 3.3 percent compared to pMOS devices having no recess (line **140**). Drive current degradations of 5.5 percent and 9.5 percent are observed on pMOS devices having 50 Å recesses (line **144**) and 100 Å recesses (line **146**), respectively.

[0042] The preferred embodiments of the present invention are fully compatible with existing MOS device fabrication processes.

[0043] Although the present invention and its advantages have been described in detail, it should be understood that various changes, substitutions and alterations can be made herein without departing from the spirit and scope of the invention as defined by the appended claims. Moreover, the scope of the present application is not intended to be limited to the particular embodiments of the process, machine, manufacture, and composition of matter, means, methods and steps described in the specification. As one of ordinary skill in the art will readily appreciate from the disclosure of the present invention, processes, machines, manufacture, compositions of matter, means, methods, or steps, presently existing or later to be developed, that perform substantially the same function or achieve substantially the same result as the corresponding embodiments described herein may be utilized according to the present invention. Accordingly, the appended claims are intended to include within their scope such processes, machines, manufacture, compositions of matter, means, methods, or steps.

What is claimed is:

1. A semiconductor device comprising:

a substrate;

a gate structure overlying the substrate;

a sidewall spacer on a sidewall of the gate structure;

a recessed region having a recess depth of substantially less than about 30 Å in the substrate, wherein at least a portion of the recessed region is under the sidewall spacer;

a silicon alloy region having at least a portion in the substrate and adjacent the recessed region, wherein the silicon alloy region has a substantially greater lattice constant than the substrate, and a thickness of substantially greater than about 30 nm.

2. The semiconductor device of claim 1, wherein the gate structure comprises a gate dielectric over the substrate and a gate electrode over the gate dielectric, and wherein the MOS device further comprises:

a lightly doped drain/source (LDD) region substantially aligned with an edge of the gate structure;

a gate spacer on a sidewall of the gate structure; and

a source/drain region in the substrate and comprising at least a portion of the silicon alloy region.

3. The semiconductor device of claim 2, wherein the silicon alloy region is spaced apart from the LDD region by a doped region formed separately.

4. The semiconductor device of claim 2, wherein the gate spacer covers a portion of the silicon alloy region.

5. The semiconductor device of claim 2, wherein the gate dielectric has a k value of greater than about 3.9.

6. The semiconductor device of claim 2, wherein the gate electrode comprises a metal silicide.

7. The semiconductor device of claim 1, wherein the silicon alloy region comprises a p-type impurity.

8. The semiconductor device of claim 1, wherein the silicon alloy region comprises SiGe.

9. The semiconductor device of claim 1, wherein the silicon alloy region comprises a portion above a top surface of the substrate.

10. A semiconductor structure comprising:

a substrate;

a first gate structure of a first transistor overlying the substrate, the first transistor being of a first conductivity type;

a first gate spacer on a sidewall of the first gate structure;

a first recessed region of the substrate having a first recess depth of substantially less than about 30 Å underlying the first gate spacer;

a first source/drain region in the substrate, the first source/drain region comprising a silicon alloy region having a substantially greater lattice constant than the substrate;

a second gate structure of a second transistor overlying the substrate, the second transistor being of a second conductivity type opposite the first conductivity type;

a second gate spacer on a sidewall of the second gate structure; and

a second recessed region having a second recess depth of substantially less than about 30 Å underlying the second gate spacer.

11. The semiconductor structure of claim 9, wherein the first conductivity type is p-type and the second conductivity type is n-type.

12. The semiconductor structure of claim 9, wherein the silicon alloy region comprises a portion substantially higher than a top surface of the substrate.

13. The semiconductor structure of claim 9, wherein the silicon alloy region comprises SiGe.

14. A method for forming a semiconductor structure, the method comprising:

providing a silicon substrate;

forming a gate structure overlying the silicon substrate;

forming a hard mask comprising silicon nitride overlying the gate structure;

forming a first sidewall spacer on a sidewall of the gate structure;

forming a second sidewall spacer on a sidewall of the first sidewall spacer;

forming a recess in the silicon substrate and along a sidewall of the second sidewall spacer;

epitaxially growing a silicon alloy region in the recess; and

removing the hard mask, the first sidewall spacer and the second sidewall spacer, wherein a portion of the substrate underlying the first sidewall spacer has a recess of substantially less than about 30 Å.

15. The method of claim 14, wherein the recess in the substrate has a depth of greater than about 300 Å.

16. The method of claim 14, wherein the first sidewall spacer comprises a material selected from the group consisting of nitride and oxide.

17. The method of claim 14, wherein the second sidewall spacer comprises a material selected from the group consisting of nitride and oxide.

18. The method of claim 14, wherein the silicon alloy region comprises SiGe.

* * * * *