US 20050112817A1

(19) United States

(12) Patent Application Publication

(10) Pub. No.: US 2005/0112817 A1

(43) Pub. Date: May 26, 2005

Cheng et al.

(54) SEMICONDUCTOR DEVICE HAVING HIGH DRIVE CURRENT AND METHOD OF MANUFACTURE THEREOF

(75) Inventors: **Shui-Ming Cheng**, Hsin-Chu (TW); **Hung-Wei Chen**, Hsin-Chu City (TW); **Zhong Tang Xuan**, Hsin-Chu City (TW)

Correspondence Address:
HAYNES AND BOONE, LLP
901 MAIN STREET, SUITE 3100
DALLAS, TX 75202 (US)

(73) Assignee: **Taiwan Semiconductor Manufacturing Company, Ltd.**, Hsin-Chu (TW)

(21) Appl. No.: **10/916,023**

(22) Filed: **Aug. 11, 2004**

Related U.S. Application Data

(63) Continuation-in-part of application No. 10/722,218, filed on Nov. 25, 2003.

Publication Classification

(51) **Int. Cl.**[7] **H01L 29/76**; H01L 21/338

(52) **U.S. Cl.** **438/219**; 257/374

(57) **ABSTRACT**

A method comprises forming a first semiconductor device in a substrate, where the first semiconductor device comprises a gate structure, a spacer disposed on sidewalls of the gate structure, the spacer having a first thickness, and raised source and drain regions disposed on either side of the gate structure. The method further comprises forming a second semiconductor device in the substrate and electrically isolated from the first semiconductor device, where the second semiconductor device comprises a gate structure, a spacer disposed on sidewalls of the gate structure, the spacer having a second thickness less than the first thickness of the spacer of the first semiconductor device, and recessed source and drain regions disposed on either side of the gate structure.

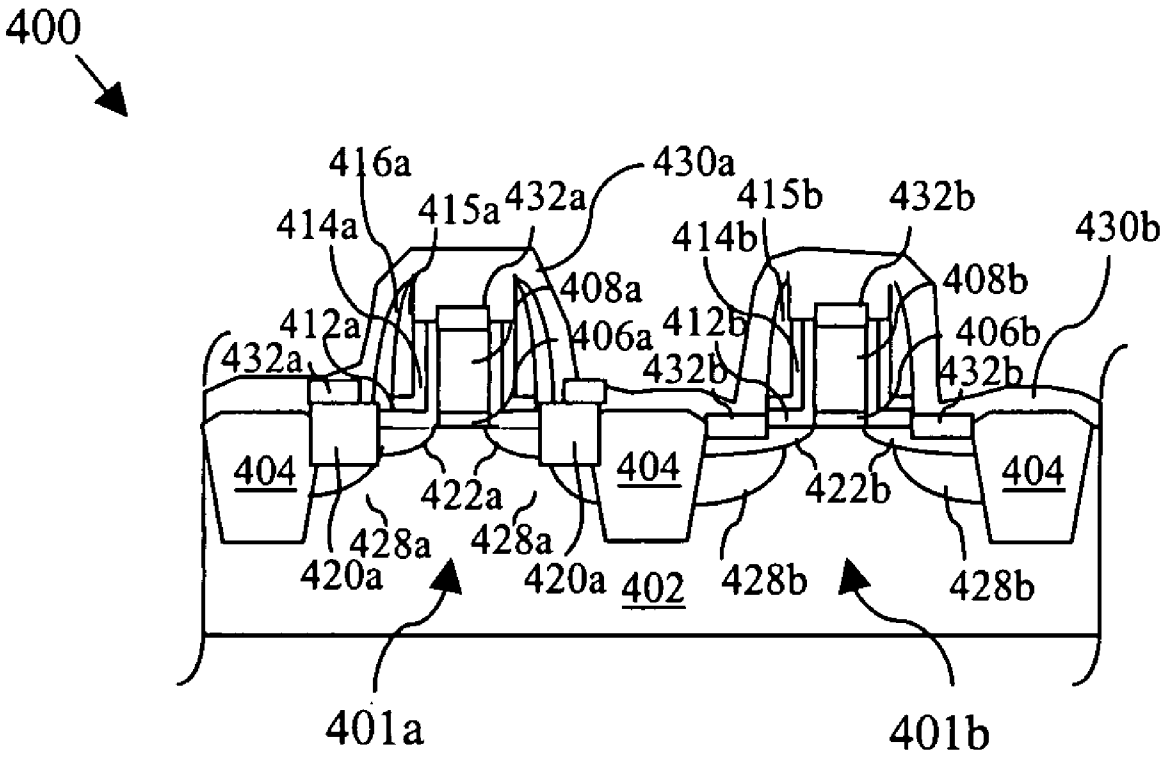

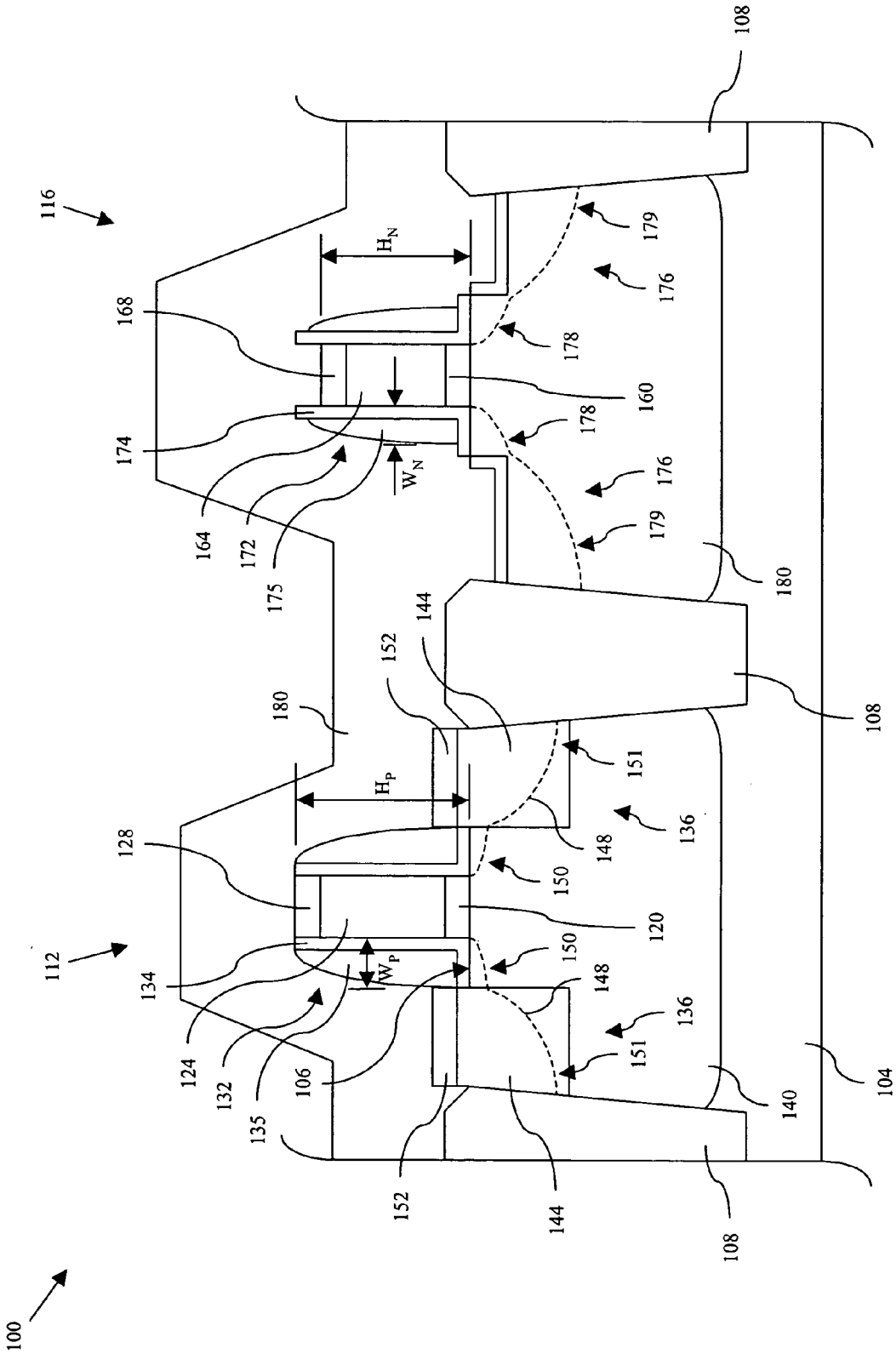
100
112
116
108
104
106
120
124
128
132
134
135
136
140
144
148
150
151
152
160
164
168
172
174
175
176
178
179
180
H_N
H_P
W_N
W_P

Fig. 1

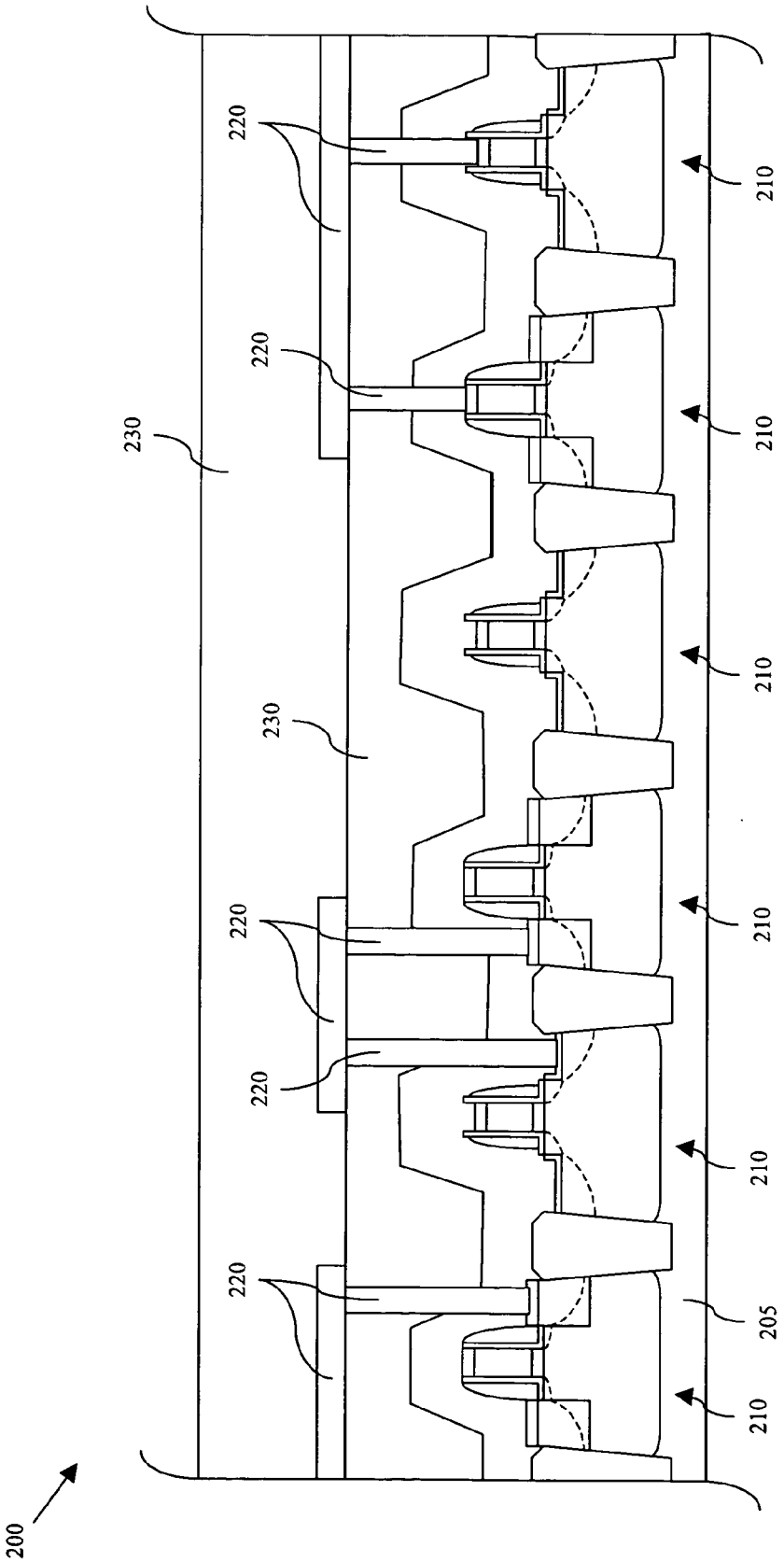

Fig. 2

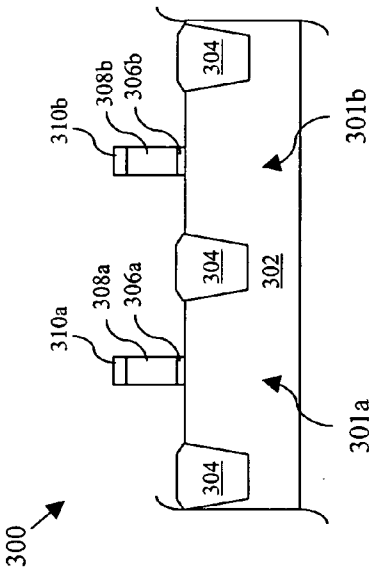

Fig. 3a

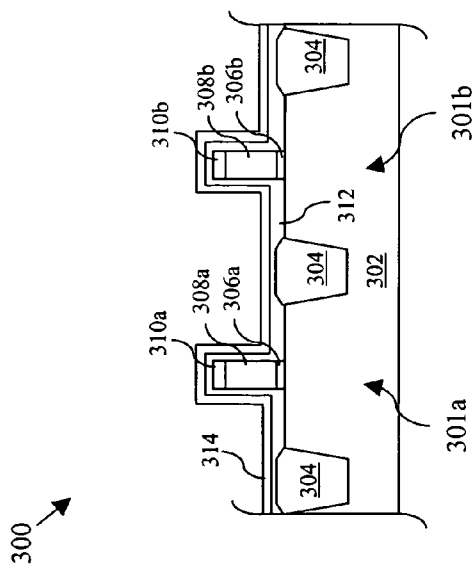

Fig. 3b

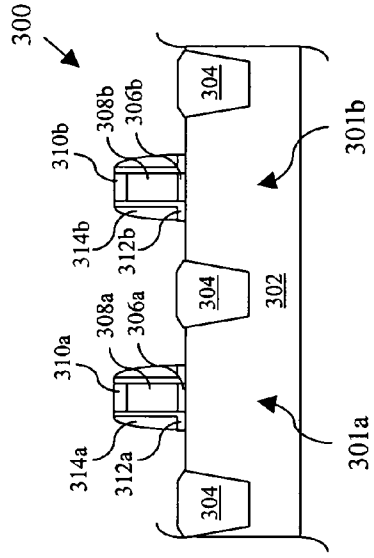

Fig. 3c

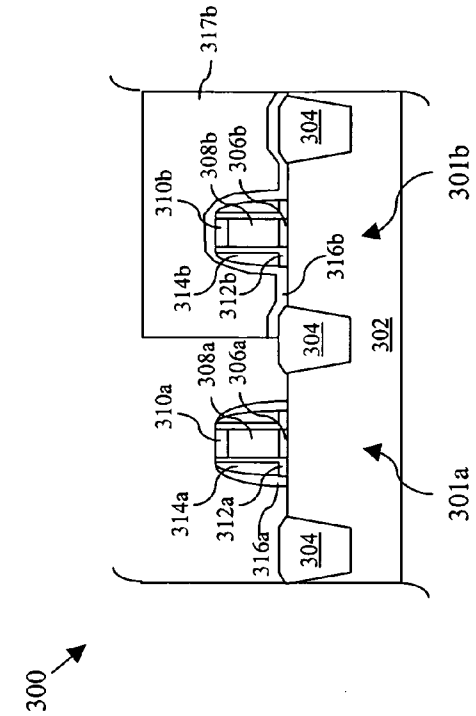

Fig. 3d

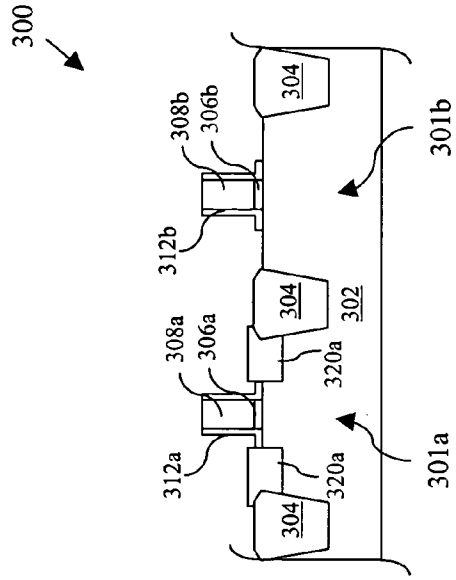

Fig. 3g

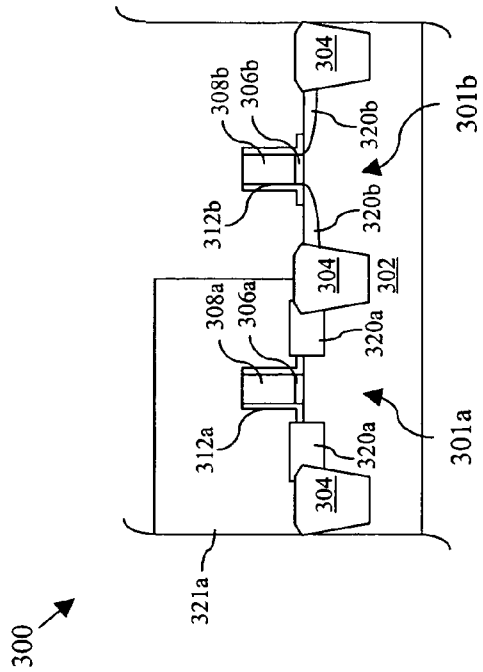

Fig. 3h

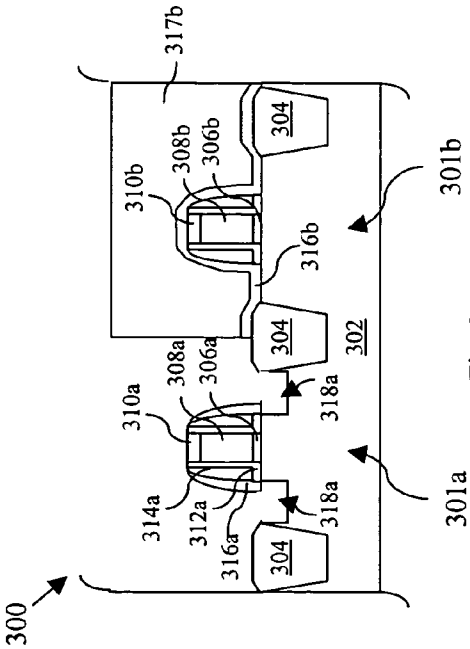

Fig. 3e

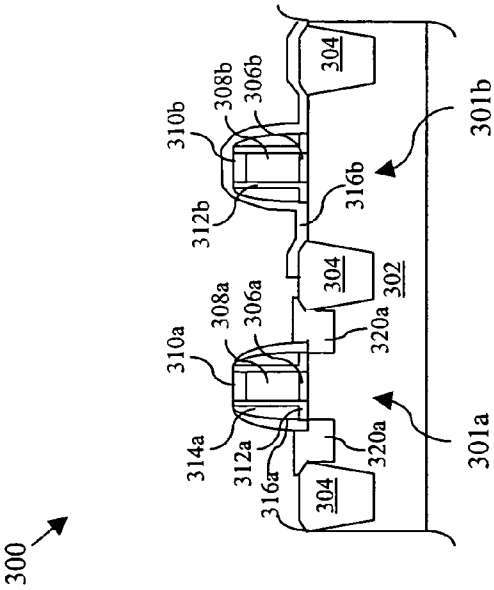

Fig. 3f

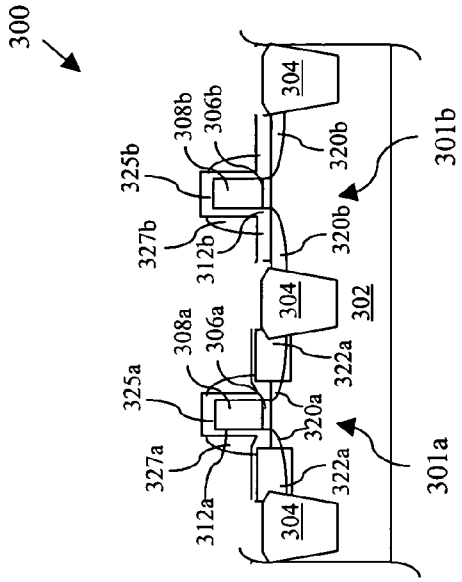

Fig. 3k

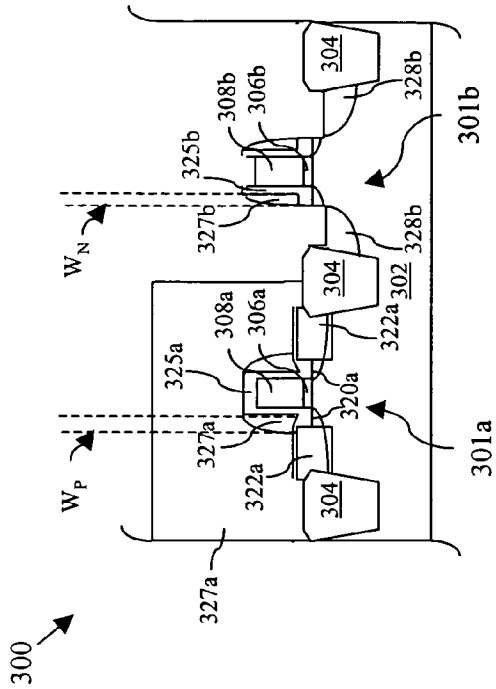

Fig. 3l

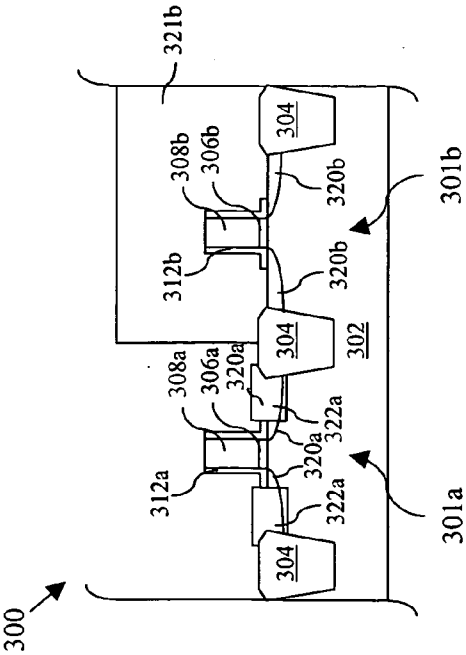

Fig. 3i

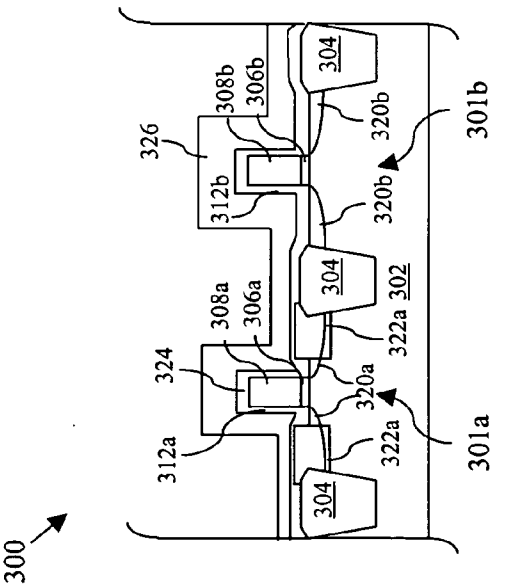

Fig. 3j

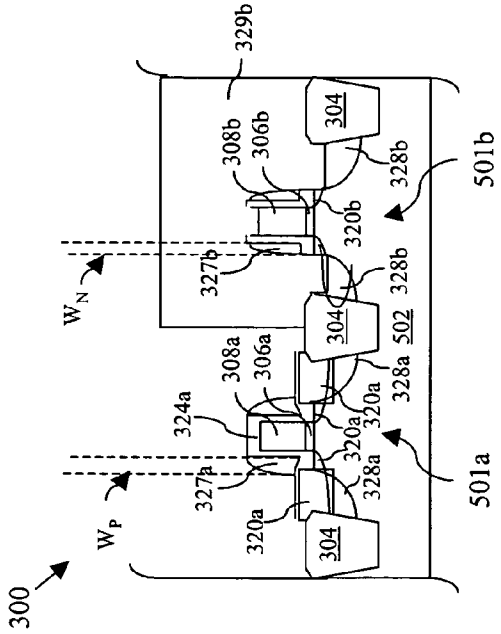
300
W_P
W_N
304
304
304
320a
320a
320a
320b
324a
327a
327b
328a
328a
328b
328b
306a
306b
308a
308b
329b
501a
501b
502

Fig. 3m

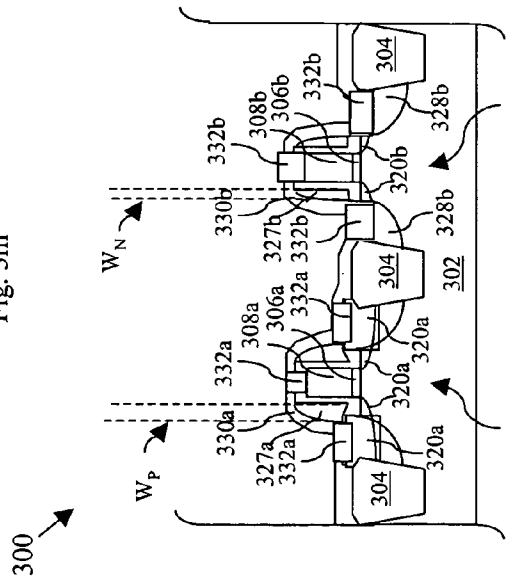
300
W_P
W_N
304
304
304
320a
320a
320a
320b
327a
327b
328b
328b
330a
330b
332a
332a
332b
332b
306a
306b
308a
308b
301a
301b
302

Fig. 3n

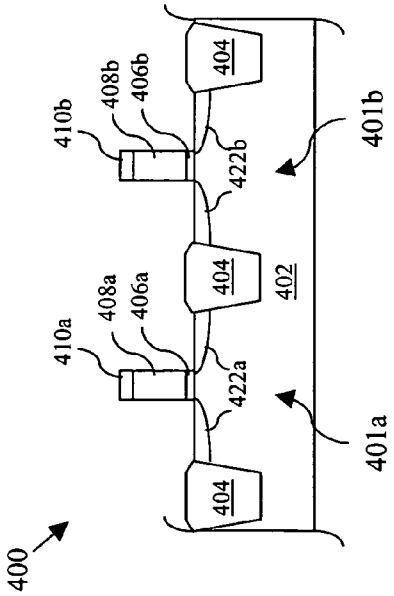

Fig. 4a

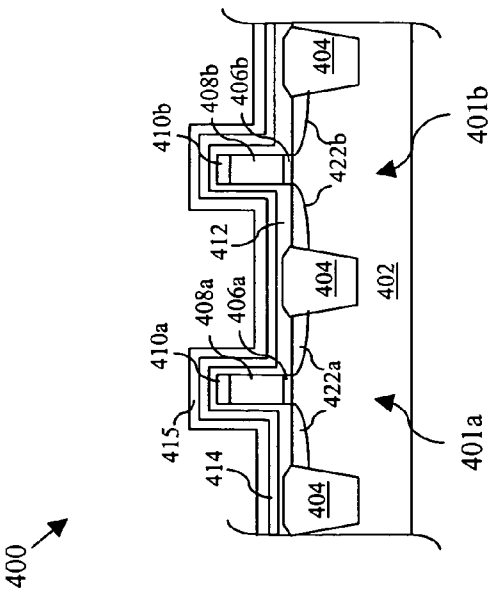

Fig. 4b

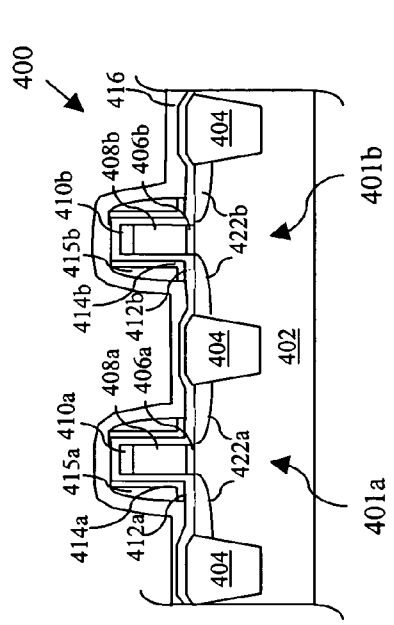

Fig. 4c

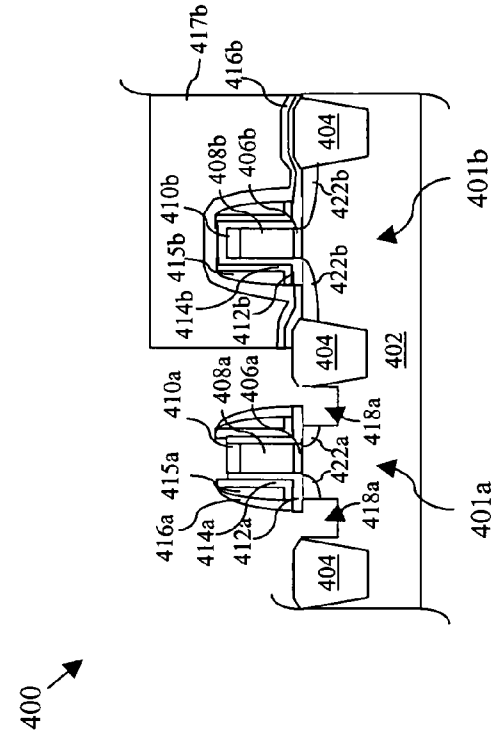

Fig. 4d

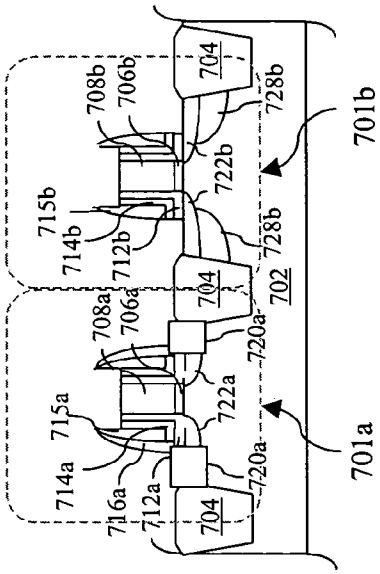

Fig. 4g

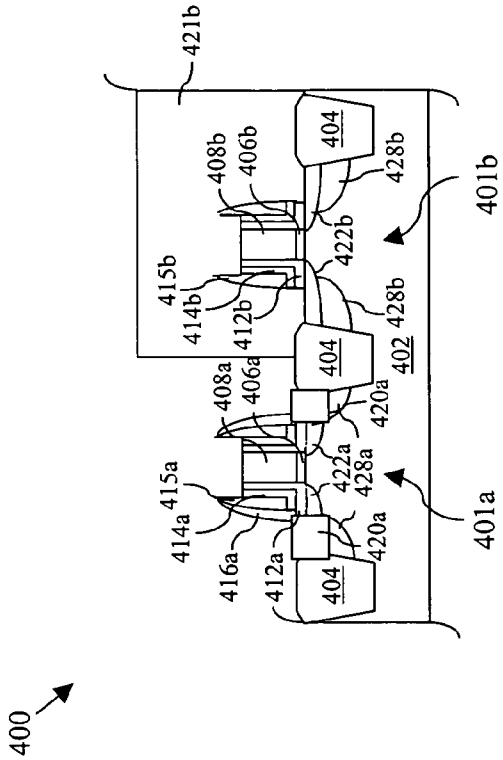

Fig. 4h

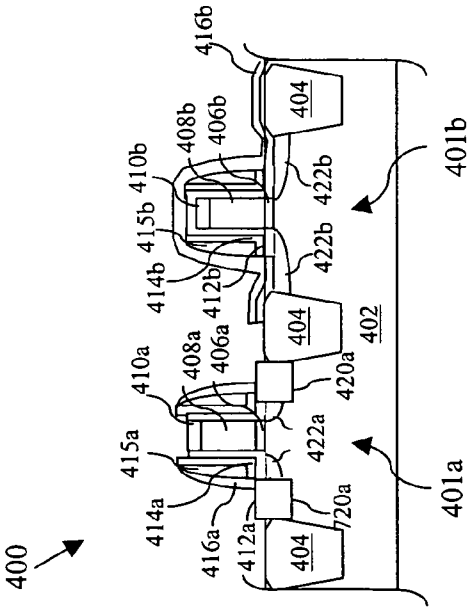

Fig. 4e

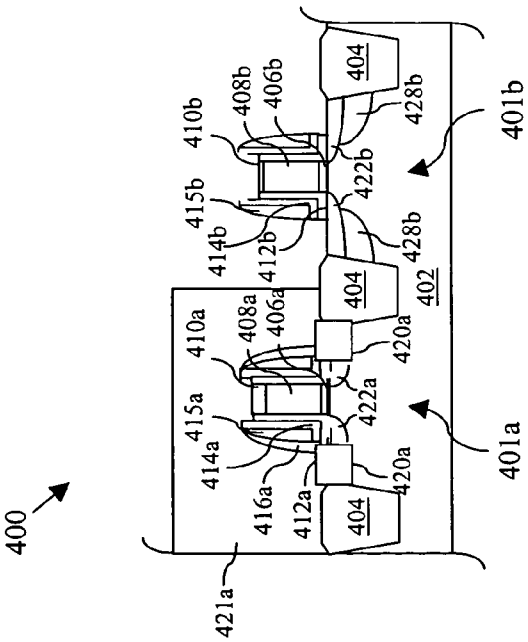

Fig. 4f

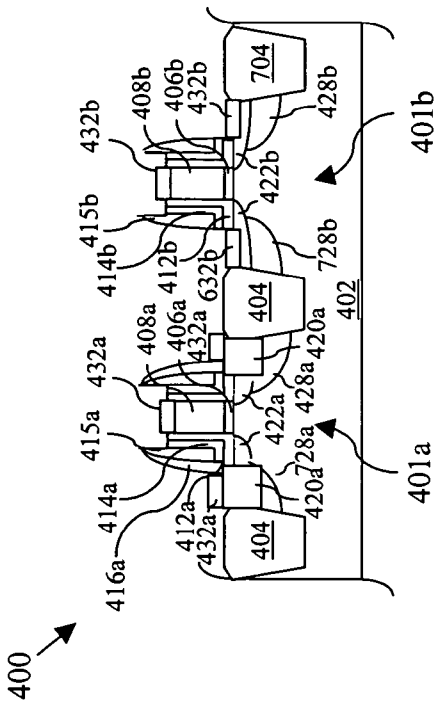
400
416a
414a
415a
432a
408a
406a
432a
412b
414b
415b
432b
408b
406b
432b
704
428b
422b
728b
632b
404
402
420a
428a
422a
728a
420a
404
412a
432a
401a
401b

Fig. 4i

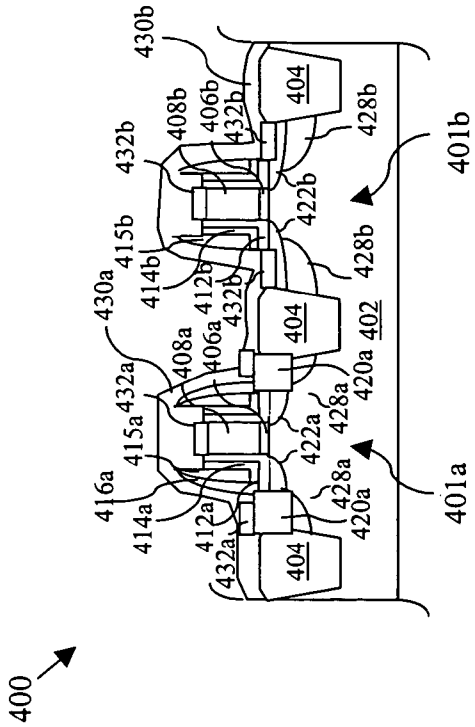
400
416a
414a
415a
432a
430a
408a
406a
432a
412b
414b
415b
432b
408b
406b
432b
430b
404
428b
422b
428b
404
402
420a
428a
422a
428a
420a
404
412a
432a
401a
401b

Fig. 4j

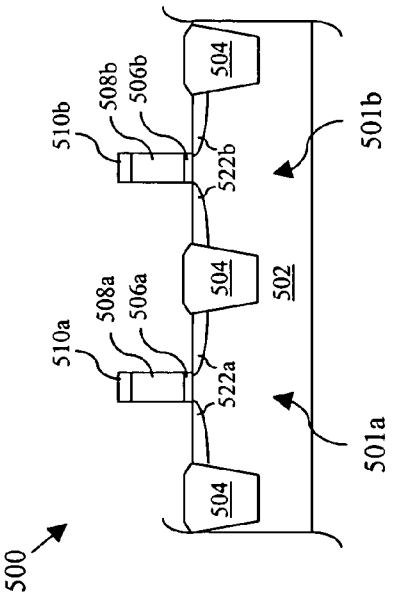

Fig. 5a

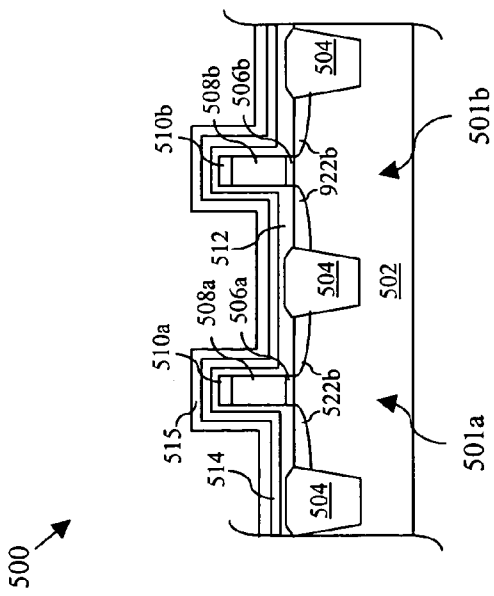

Fig. 5b

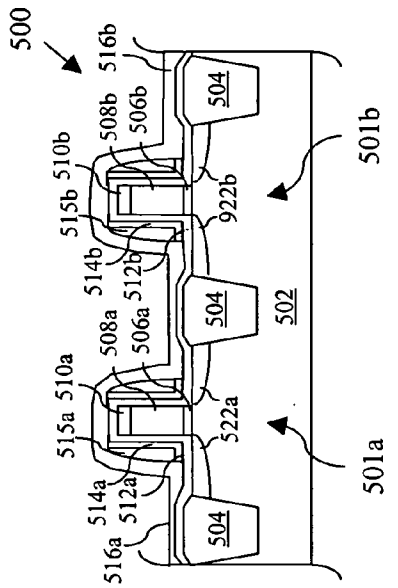

Fig. 5c

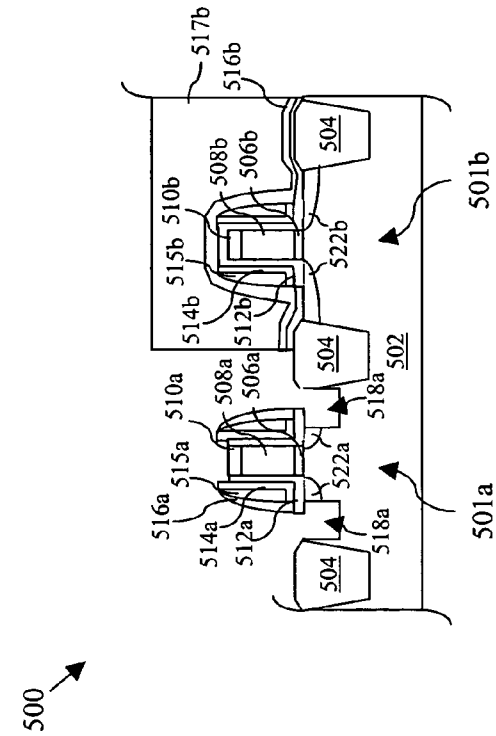

Fig. 5d

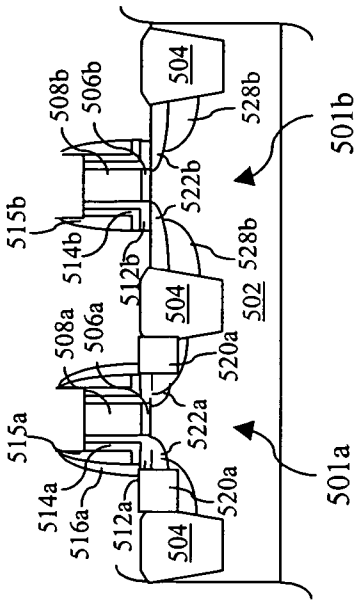

Fig. 5g

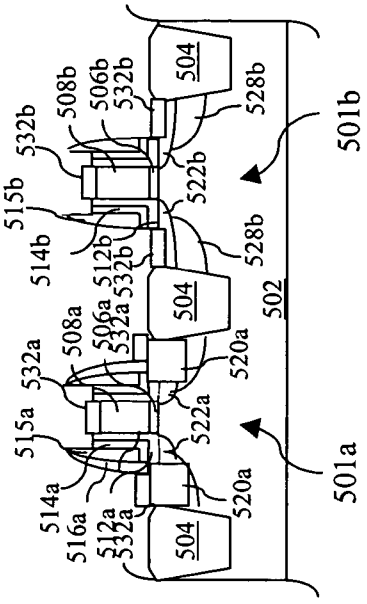

Fig. 5h

500

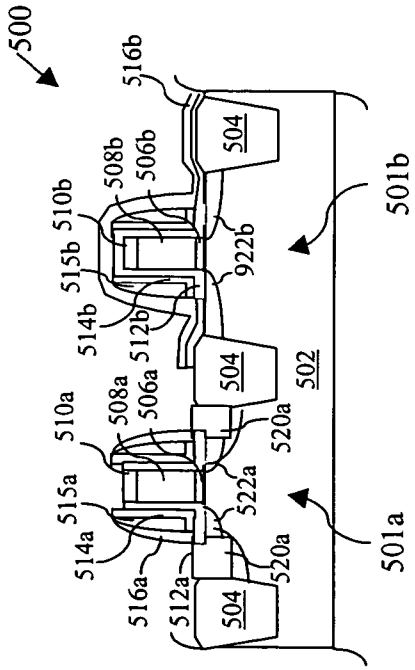

Fig. 5e

500

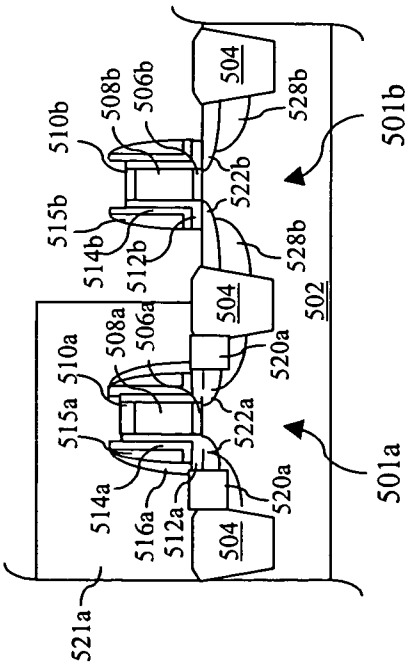

Fig. 5f

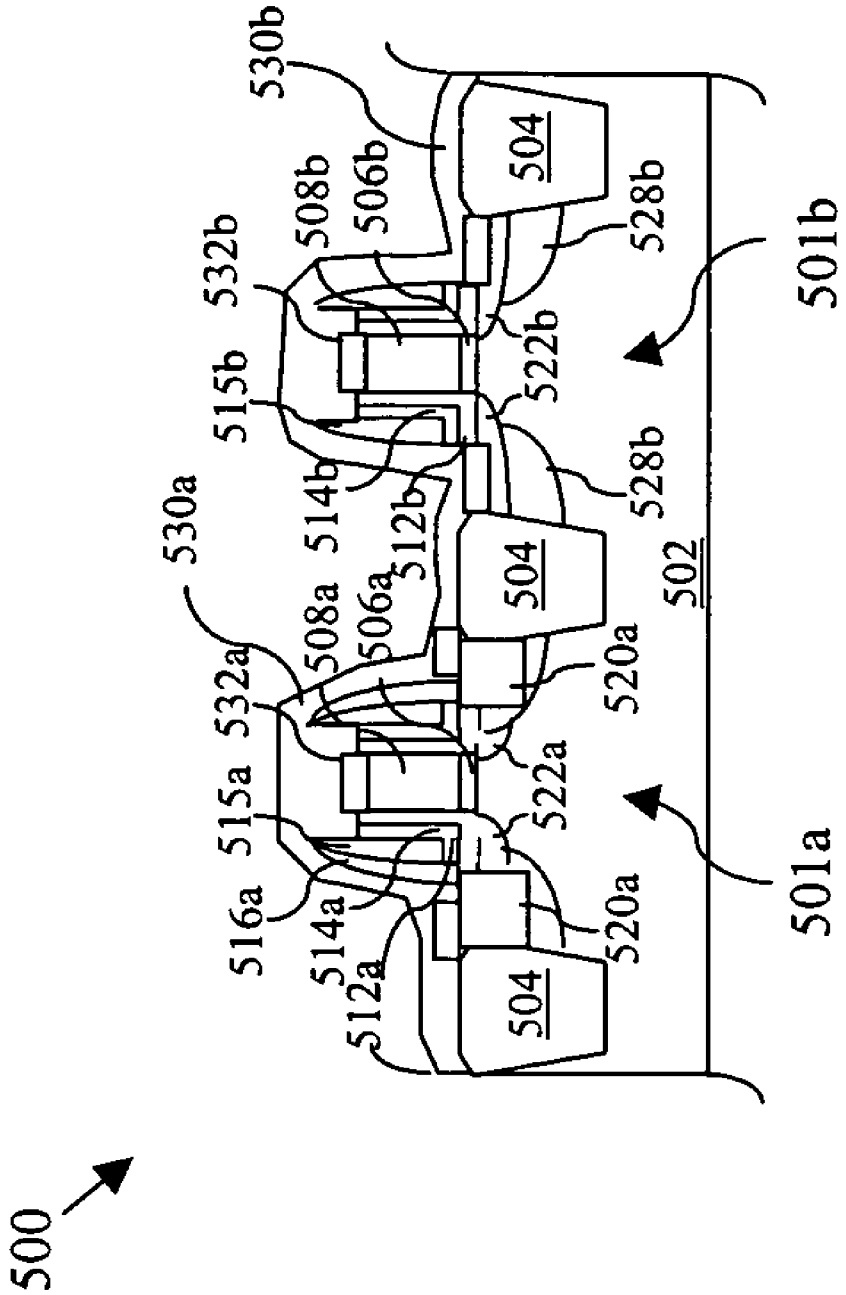
500
530b
532b
508b
506b
515b
514b
512b
530a
508a
506a
532a
515a
516a
514a
512a
504
504
504
528b
522b
528b
502
520a
522a
520a
501b
501a

Fig. 5i

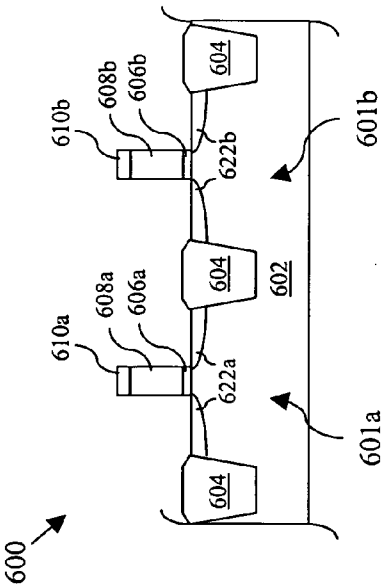

Fig. 6a

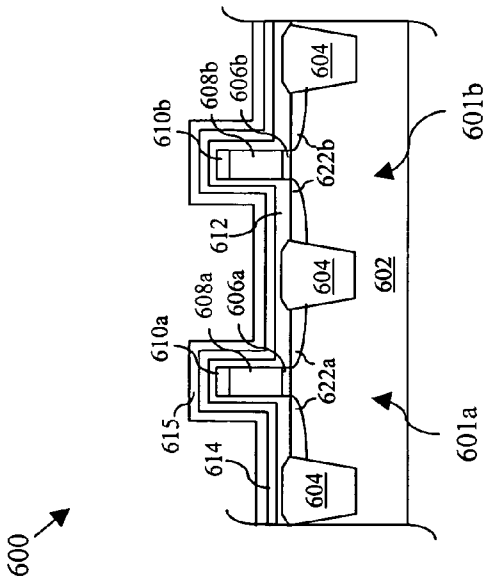

Fig. 6b

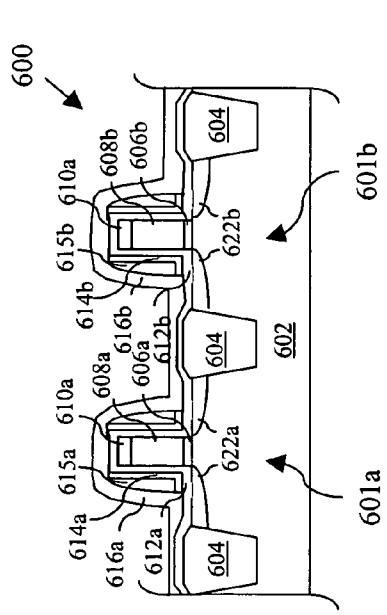

Fig. 6c

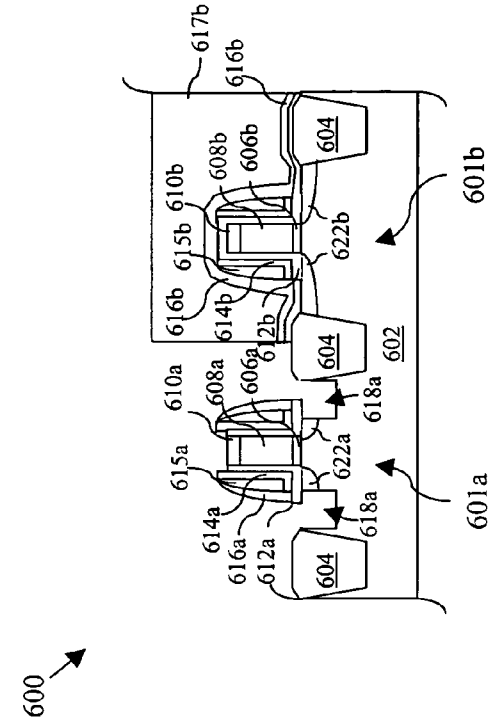

Fig. 6d

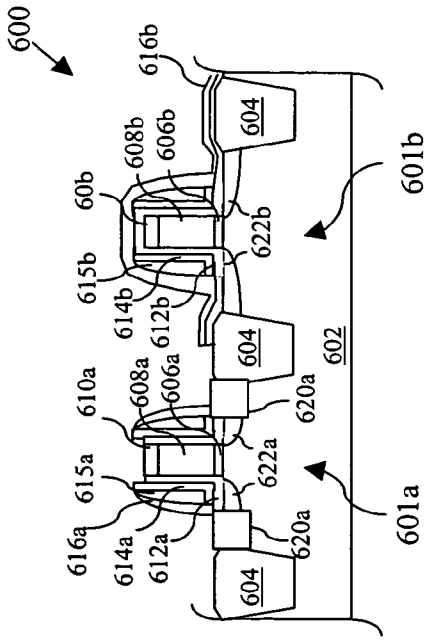

Fig. 6e

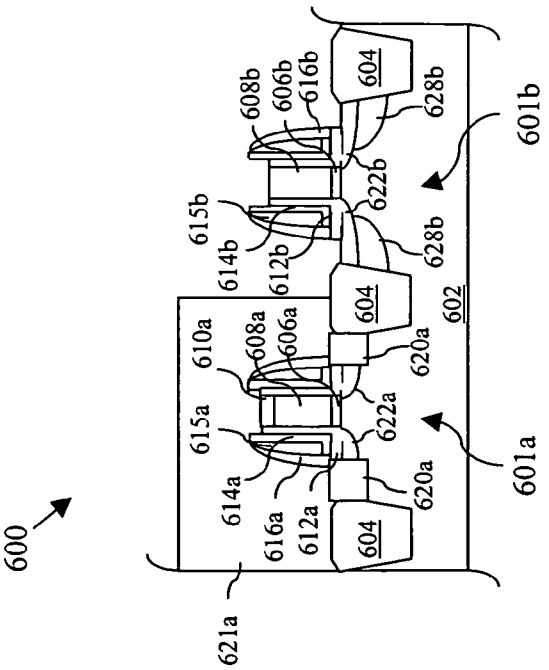

Fig. 6f

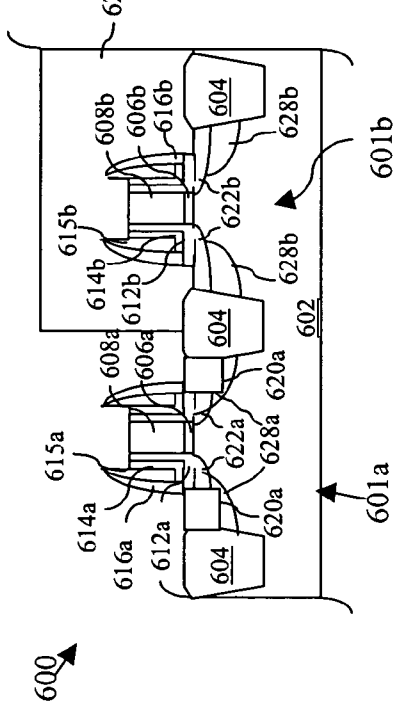

Fig. 6g

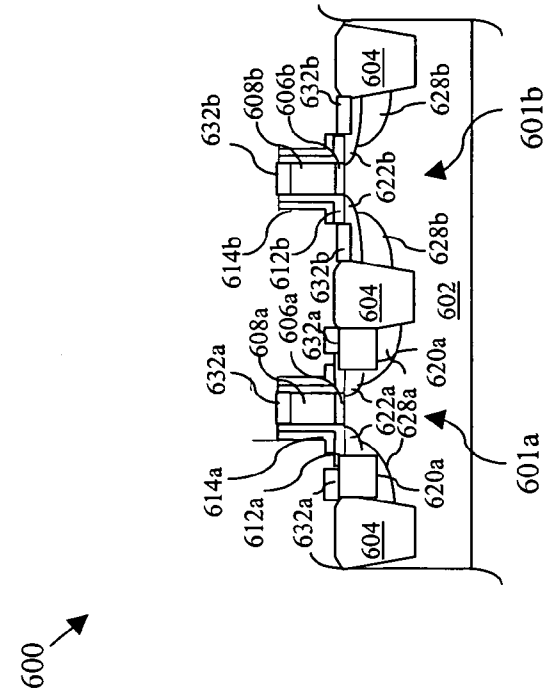

Fig. 6h

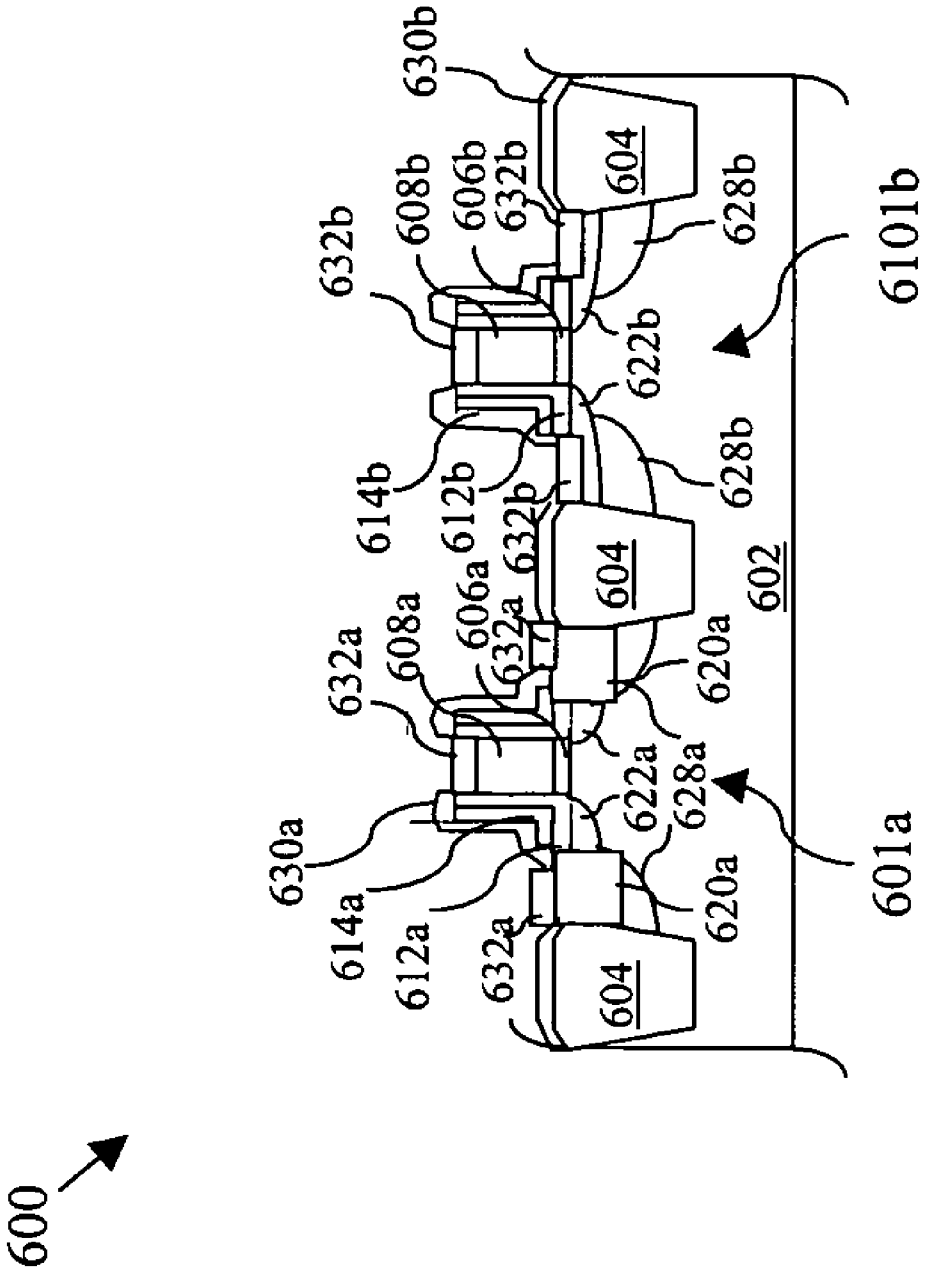
600
630a
614a
612a
632a
604
620a
622a
628a
601a
632a
608a
606a
632a
604
620a
602
614b
612b
632b
628b
622b
632b
608b
606b
632b
604
628b
6101b
630b

Fig. 6i

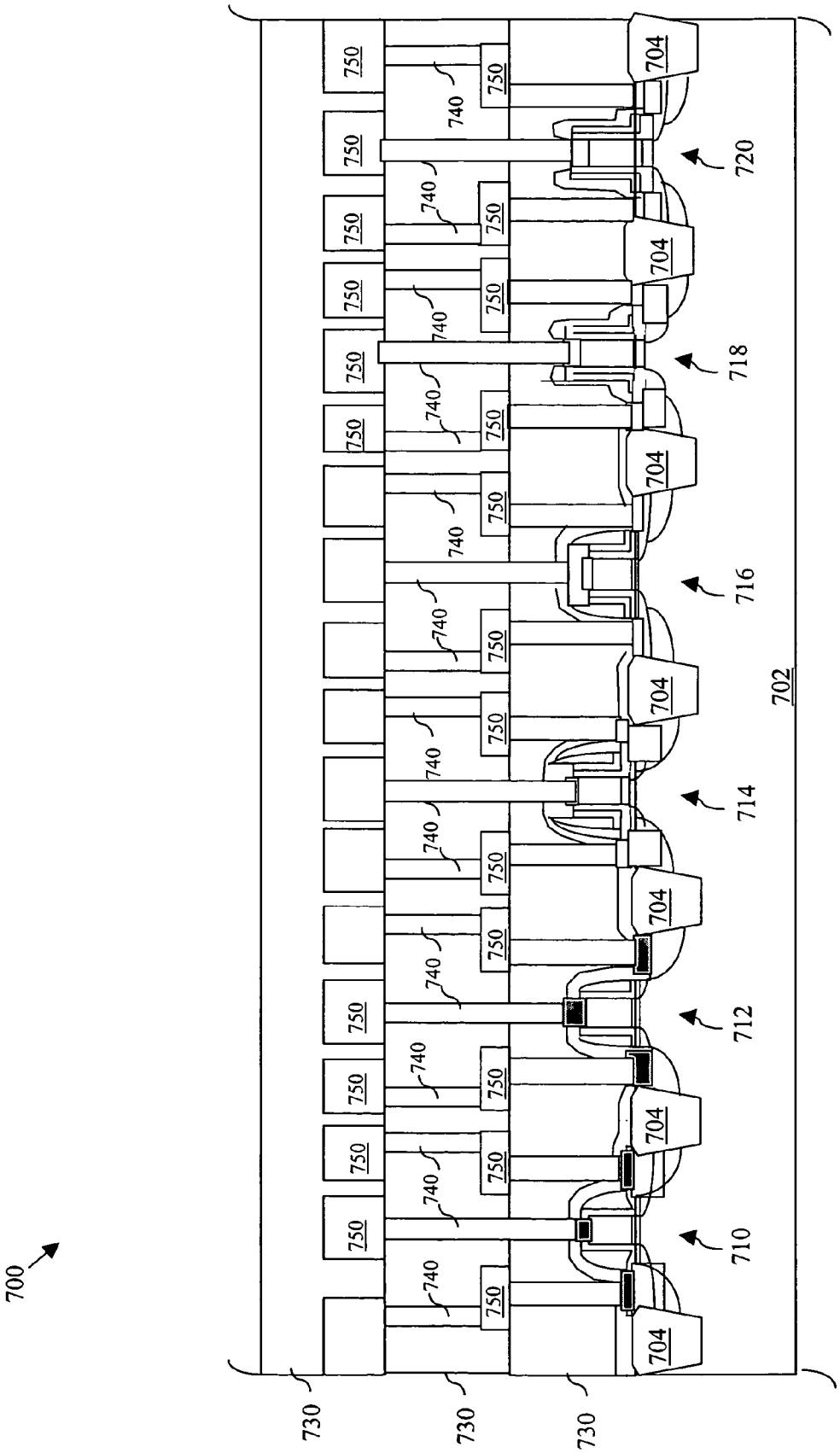

Fig. 7

SEMICONDUCTOR DEVICE HAVING HIGH DRIVE CURRENT AND METHOD OF MANUFACTURE THEREOF

CROSS-REFERENCE

[0001] This application is a continuation-in-part application of commonly-assigned U.S. Patent Application "SEMICONDUCTOR DEVICE HAVING HIGH DRIVE CURRENT AND METHOD OF MANUFACTURE THEREFOR," Ser. No. 10/722,218, filed Nov. 11, 2003.

BACKGROUND

[0002] Increasing tensile or compressive stress in a semiconductor device substrate can improve drive current. For example, increasing the tensile stress in the substrate can improve the performance of n-channel metal-oxide-semiconductor (NMOS) devices. Similarly, increasing the compressive stress in the substrate can improve the performance of p-channel metal-oxide-semiconductor (PMOS) devices. However, such tuning of the stress in a substrate incorporating NMOS and PMOS devices, such as by increasing tensile stress in substrate regions containing NMOS devices and increasing compressive stress in substrate regions containing PMOS devices, is difficult.

[0003] Some applications have realized limited localized stress tuning by employing different materials for adjacent shallow trench isolation (STI) regions and other isolation structures. Stress tuning can also be accomplished by employing different materials for silicide and other contact layers. Etch stop layers remaining in the device structure after being employed as etching endpoints have also been employed for substrate stress tuning. However, such past attempts accomplished only increased tensile stress or increased compressive stress. That is, the performance of PMOS devices in a complimentary metal-oxide-semiconductor (CMOS) scheme were improved, or the performance of NMOS devices in the CMOS scheme were improved, but the past attempts failed to simultaneously improve device performance of both the PMOS and NMOS devices.

BRIEF DESCRIPTION OF THE DRAWINGS

[0004] Aspects of the present disclosure are best understood from the following detailed description when read with the accompanying figures. It is emphasized that, in accordance with the standard practice in the industry, various features are not drawn to scale. In fact, the dimensions of the various features may be arbitrarily increased or reduced for clarity of discussion.

[0005] **FIG. 1** is a sectional view of one embodiment of a semiconductor device constructed according to aspects of the present disclosure.

[0006] **FIG. 2** is a sectional view of one embodiment of an integrated circuit device constructed according to aspects of the present disclosure.

[0007] **FIGS. 3***a*-**3***n* are sectional views of one embodiment of a method of making a microelectronic device according to aspects of the present disclosure.

[0008] **FIG. 4***a*-**4***j* are sectional views of another embodiment of a method of making a microelectronic device according to aspects of the present disclosure.

[0009] **FIGS. 5***a-i* are sectional views of another embodiment of a method of making a microelectronic device according to aspects of the present disclosure.

[0010] **FIGS. 6***a-i* are sectional views of another embodiment of a method of making a microelectronic device according to aspects of the present disclosure.

[0011] **FIG. 7** is a sectional view of one embodiment of an integrated circuit device constructed according to aspects of the present disclosure.

DETAILED DESCRIPTION

[0012] It is to be understood that the following disclosure provides many different embodiments, or examples, for implementing different features of various embodiments. Specific examples of components and arrangements are described below to simplify the present disclosure. These are, of course, merely examples and are not intended to be limiting. In addition, the present disclosure may repeat reference numerals and/or letters in the various examples. This repetition is for the purpose of simplicity and clarity and does not in itself dictate a relationship between the various embodiments and/or configurations discussed. Moreover, the formation of a first feature over or on a second feature in the description that follows may include embodiments in which the first and second features are formed in direct contact, and may also include embodiments in which additional features may be formed interposing the first and second features, such that the first and second features may not be in direct contact.

[0013] The present disclosure relates generally to semiconductor devices and, more specifically, to a semiconductor device having a high drive current, a method of manufacture thereof, and an integrated circuit device incorporating the same.

[0014] Referring to **FIG. 1**, illustrated is one embodiment of a semiconductor device **100** constructed according to aspects of the present disclosure. The semiconductor device **100** includes a substrate **104** having one or more isolation structures **108** formed therein. The semiconductor device **100** also includes a PMOS device **112** and an NMOS device **116** that are electrically isolated by one of the isolation structures **108**.

[0015] The substrate **104** may comprise an elementary semiconductor (such as crystal silicon, polycrystalline silicon, amorphous silicon and germanium), a compound semiconductor (such as silicon carbide and gallium arsenic), an alloy semiconductor (such as silicon germanium, gallium arsenide phosphide, aluminum indium arsenide, aluminum gallium arsenide and gallium indium phosphide) and/or any combination thereof. The substrate **104** may also comprise a semiconductor material on an insulator, such as silicon-on-insulator (SOI), or a thin film transistor (TFT). In one embodiment, the substrate **104** may also include a doped epitaxial layer. The substrate **104** may also include a multiple silicon structure or a multilayer, compound semiconductor structure. Although not limited within the scope of the present disclosure, the channel direction of the substrate **104** in some embodiments may be <100> or <110> and the crystalline orientation of the substrate **104** in some embodiments may be **(100)** or **(110)** or **(111)**.

[0016] The isolation structures **108** may be formed by local oxidation of silicon (LOCOS), shallow trench isolation

(STI) and/or other processes. For example, the isolation structures **108** may be formed by etching or otherwise patterning recesses in the substrate **104** and subsequently filling the recesses with silicon dioxide and/or other electrically insulating materials, possibly by chemical vapor deposition.

[**0017**] The PMOS device **112** includes a gate dielectric layer **120** over the substrate **104**, a gate electrode **124** over the gate dielectric layer **120**, and possibly a gate contact **128** over the gate electrode **124**. The PMOS device **112** also includes spacers **132** on opposing sides of the gate electrode **124** and over the substrate **104**, and source/drain regions **136** on opposing sides of the gate electrode **124** and at least partially within the substrate **104**. The PMOS device **112** may also include or be at least partially formed in an n-doped region **140** of the substrate **104**. The n-doped region **140** may be formed by ion implantation of phosphorous, antimony, arsenic and/or other impurities or dopants.

[**0018**] The gate dielectric layer **120** may be formed by thermal oxidation, atomic layer deposition (ALD), chemical vapor deposition (CVD), physical vapor deposition (PVD), plasma enhanced CVD (PECVD) and/or other processes. Moreover, although not limited by the scope of the present disclosure, the gate dielectric layer **120** may comprise silicon oxide, silicon oxynitride, or a high-k dielectric, such as hafnium oxide, zirconium oxide, aluminum oxide, a hafnium dioxide-alumina (HfO2-Al2O3) alloy, and/or combinations thereof. The gate dielectric layer may have a thickness ranging between about 0.5 nm and about 10 nm.

[**0019**] The gate electrode **124** may be formed by CVD, PVD, PECVD, ALD and/or other processes, and may comprise doped polysilicon, silicon and germanium polysilicon, titanium nitride, tantalum nitride, nickel silicide, cobalt silicide, silicided polysilicon and/or other metals. The height of gate electrode **124** may range between about 10 nm and about 200 nm. After forming the gate electrode **124** (and possibly other subsequent process steps), the gate electrode **124** may also be processed to form an ohmic contact, such as the gate contact **128** discussed above. The gate contact **128** may be formed by CVD, PVD, salicidation and/or other processes, and may comprise nickel silicide, cobalt silicide, tungsten silicide, tantalum silicide, titanium silicide, platinum silicide, erbium silicide, palladium silicide and/or combinations thereof. The gate dielectric layer **120** and the gate electrode **124**, and possibly the gate contact **128**, collectively have a combined height H_P above a surface **106** of the substrate **104**.

[**0020**] The spacers **132** may be formed by CVD, PVD, thermal oxidation and/or other processes, and may comprise one or more dielectric materials such as silicon nitride, silicon oxide, silicon carbide, silicon oxynitride and/or combinations thereof. The spacers **132** may each have a width W_p extending from the gate electrode **124**. The width of spacers **132** may range between about 5 nm and about 100 nm.

[**0021**] The spacers **132** may also comprise more than one layer. For example, as in the illustrated embodiment, the spacers **132** may comprise stacked first and second layers **134**, **135**. The first layer **134** may conform to a portion of the substrate **104** and one side of the stack formed by the gate dielectric layer **120**, the gate electrode **124** and possibly the gate contact **128**. The second layer **135** may be substantially bound by the first layer **134**. Of course, the spacers **132** may comprise other layers in addition to and/or as an alternative to those described herein.

[**0022**] The source/drain regions **136** may be of conventional composition and fabrication. For example, the source/drain regions **136** may comprise doped portions of the substrate **104** which may be formed by ion implantation of boron, boron difluoride (BF2), or other dopants, and/or in-situ doped of boron or other dopants. In such embodiments, the source/drain regions **136** may be substantially coplanar with the surface **106** of the substrate **104**. However, as in the illustrated embodiment, the source/drain regions **136** may extend above the substrate surface **106**. In such embodiments, the source/drain regions **136** may comprise silicon, silicon germanium, silicon carbide, gallium arsenide and/or other materials, and may be formed by dry etching or otherwise patterning recesses in the substrate **104** and subsequently filling the recesses with such materials. For example, the recess may be epitaxially filled with silicon germanium, possibly by exposing the recesses to a precursor comprising germanium. The filled recesses are herein designated by the reference numeral **144**. The depth of recessed source/drain region may range between about 5 nm and about 100 nm. Moreover, as in the illustrated embodiment, the recesses **144** may be filled to a height above the surface **106** of the substrate **104**, such that the source/drain regions **136** may be raised source/drain regions. The height of raised source/drain regions may range between about 5 nm and about 100 nm.

[**0023**] The doping processes discussed above that may be employed to form the source/drain regions **136** may also be performed after the filled recesses **144** are formed, or simultaneous with forming the filled recesses **144**, thereby forming a doping profile **148** further optimizing the conductivity of the source/drain regions **136**. Moreover, such a doping profile **148** may be accomplished in more than one doping procedure. For example, as in the illustrated embodiment, the doping profile **148** may include lightly doped regions **150** adjacent the spacers **132** and heavier doped regions **151** within the filled recesses **144**, wherein the lightly doped regions **150** may be formed by a first doping process and the heavier doped regions **151** may be formed by a second, subsequent doping process. The lightly doped regions **150** may be formed by implanting boron, boron diflourine (BF_2), and/or other dopants. The energy of ion implantation of boron may range between about 0.2 keV and about 20 keV and the dose may range between about 5×10^{14} and about 5×10^{15} cm^{-2}. The heavier doped regions **151** may be formed by ion implantation or in-situ doped of boron, boron difluoride (BF_2), and/or other dopants. The energy of ion implant of boron may range between about 0.2 keV are about 50 keV and the dose of ion implantation of boron may range between about 1×10^{15} and about 5×10^{15} cm^{-2}.

[**0024**] After their formation, the source/drain regions **136** may also be processed to form contacts **152** thereon. The contacts **152** may be substantially similar in composition and manufacture to the gate contact **128**, and may be formed simultaneously with the gate contact **128**.

[**0025**] The NMOS device **116** includes a gate dielectric layer **160** over the substrate **104**, a gate electrode **164** over the gate dielectric layer **160**, and possibly a gate contact **168** over the gate electrode **164**. The NMOS device **116** also

includes spacers **172** on opposing sides of the gate electrode **164** over the substrate **104**, and source/drain regions **176** on opposing sides of the gate electrode **164** at least partially within the substrate **104**. The NMOS device **116** may also include or be at least partially formed in a p-doped region **180** of the substrate **104**. The p-doped region **180** may be formed by ion implantation of boron, boron difluoride (BF_2), indium and/or other impurities or dopants.

[**0026**] The gate dielectric layer **160**, gate electrode **164** and gate contact **168** are substantially similar in composition and manufacture to the gate dielectric layer **120**, gate electrode **124** and gate contact **128**. In one embodiment, the gate dielectric layers **120**, **160** are formed simultaneously, the gate electrodes **124**, **164** are formed simultaneously, and the gate contacts **128**, **168** are formed simultaneously. However, in one embodiment, the gate dielectric layer **160** and the gate electrode **164**, and possibly the gate contact **168**, have a combined height H_N above the surface **106** of the substrate **104**. The height H_N may be substantially equal to the combined height H_P discussed above. However, in one embodiment, the height H_N may be substantially less than the combined height H_P. For example, the height H_N may be at least 10-20% less than the height H_P. In one embodiment, the height H_N is 30% less than the height H_P. In another embodiment, the height H_N may be substantially greater than the combined height H_P. For example, the height H_N may be at least 10-20% greater than the height H_P. In one embodiment, the height H_N is 30% greater than the height H_P.

[**0027**] The spacers **172** are substantially similar in composition and manufacture to the spacers **132**, and may be formed simultaneously with the spacers **132**. For example, the spacers **172** may comprise a first layer **174** at least spanning the height H_N and a portion of the substrate surface **106**, and a second layer **175** substantially bound by the first layer **174**. The spacers **172** have a width W_N extending from the gate electrode **164** that is substantially equal to the width W_P of the spacers **132**. However, in one embodiment, the spacers **172** have a width W_N that is substantially less than the width W_P of the spacers **132**. For example, the width W_N may be at least 10-20% less than the width W_P. In one embodiment, the width W_N is 50% than the width W_P. In another embodiment, the spacers **172** have a width W_N that is substantially greater than the width W_P of the spacers **132**. For example, the width W_N may be at least 10-20% greater than the width W_P. In one embodiment, the width W_N is 50% greater the width W_P.

[**0028**] The source/drain regions **176** may be substantially similar in composition and manufacture to the source/drain regions **136**. However, as in the illustrated embodiment, the source/drain regions **176** may be recessed source/drain regions. That is, the source/drain regions **176** may be formed by dry etching or otherwise patterned recesses in the substrate **104** prior to performing the ion implantation or other processes employed to form a doping profile. The source/drain regions **176** may also have a doping profile that is similar to the doping profile of the source/drain regions **136**, in that the source/drain regions **176** may include lightly doped regions **178** and heavily doped regions **179**. The lightly doped regions **178** may be formed by implanting arsenic, phosphorous, antimony, and/or other dopants. The energy of ion implantation of arsenic may range between about 0.5 KeV and about 10 KeV and the dose may range between about 5×10^{14} and about 5×10^{15} cm^{-2}. The heavier doped regions **179** may be formed by ion implantation or in-situ doped of arsenic, phosphorous, antimony, and/or other dopants. The energy of ion implant of arsenic may range between about 5 keV and about 50 keV and the dose of ion implantation of boron may range between about 1×10^{15} and about 5×10^{15} cm^{-2}.

[**0029**] In one embodiment, the source/drain regions **136** may be recessed source/drain regions and the source/drain regions **176** may be raised source/drain regions, in contrast to the illustrated embodiment. In another embodiment, the source/drain regions **136** may be recessed source/drain regions and the source/drain regions **176** may be coplanar with the substrate **104**. In another embodiment, the source/drain regions **136** may be raised source/drain regions and the source/drain regions **176** may be coplanar with the substrate **104**. In another embodiment, the source/drain regions **176** may be recessed source/drain regions and the source/drain regions **136** may be coplanar with the substrate **104**. In another embodiment, the source/drain regions **176** may be raised source/drain regions and the source/drain regions **136** may be coplanar with the substrate **104**.

[**0030**] The semiconductor device **100** may also include an etch stop layer **180**. The etch stop layer **180** may comprise silicon nitride (e.g., Si3N4), silicon oxynitride (e.g., SiON), silicon carbide, silicon dioxide and/or other materials, and may be formed by blanket or selective deposition by CVD, PVD, thermal oxidation and/or other processes. The etch stop layer **180** may be a tensile or compressive film, wherein a stress level may range between about +0.01 and about +2 GPa for tensile film and between about −0.01 and about −2 GPa for compressive film. The tensile or compressive nature of the etch stop layer **180** may impart strain within the source/drain regions **136**, **176**. Moreover, the strain induced in the source/drain region **136** by the etch stop layer **180** may be substantially different in magnitude that the strain induced in the source/drain region **176** by the etch stop layer **180**. For example, the strain induced in the source/drain regions **136**, **176** may vary by 10-20% in magnitude. In one embodiment, the strain induced in the source/drain regions **136** may be tensile and the strain induced in the source/drain regions **176** may be compressive. In another embodiment, the strain induced in the source/drain regions **136** may be compressive and the strain induced in the source/drain regions **176** may be tensile. The thickness of etch stop layer **180** may range between about 5 nm and about 200 nm.

[**0031**] Referring to **FIG. 2**, illustrated is one embodiment of an integrated circuit device **200** constructed according to aspects of the present disclosure. The integrated circuit device **200** is one environment in which embodiments of the semiconductor device **100** shown in **FIG. 1** may be implemented. For example, the integrated circuit device **200** includes a plurality of semiconductor devices **210**, ones of which may be substantially similar to the semiconductor device **100** shown in **FIG. 1**. The semiconductor devices **210** may form a logic circuit or other transistor array, including a one-, two- or three-dimensional array, and may be oriented in one or more rows and/or one or more columns, such as on or over a substrate **205** in which the substrate **205** is substantially planar. In one environment, the substrate **205** may be substantially spherical or have a spherical or otherwise rounded surface on, over or from which the plurality semiconductor devices **210** may be formed.

[0032] The integrated circuit device **200** also includes interconnects **220** extending along and/or through one or more dielectric layers **230** to ones of the plurality of semiconductor devices **210**. The dielectric layer **230** may comprise silicon dioxide, fluoride-doped silicate glass (FSG), Black Diamond® (a product of Applied Materials of Santa Clara, Calif.), Xerogel, Aerogel, amorphous fluorinated carbon, Parylene, BCB, Flare, and SiLK, and/or other materials, and may be formed by CVD, PECVD, ALD, PVD, spin-on coating and/or other processes. The interconnects **220** may comprise copper, tungsten, gold, aluminum, carbon nano-tubes, carbon fullerenes, refractory metals, alloys of these materials and/or other materials, and may be formed by CVD, PECVD, ALD, PVD and/or other processes. The interconnects **220** may also include more than one layer. For example, each interconnect **220** may comprise an adhesion layer possibly comprising titanium, titanium nitride, tantalum or tantalum nitride, a barrier layer possibly comprising titanium nitride or tantalum nitride, and a bulk conductive layer comprising copper, tungsten, aluminum, or aluminum alloy.

[0033] Thus, the present disclosure introduces a semiconductor device including, in one embodiment, an isolation region located in a substrate, an NMOS device located partially over a surface of the substrate, and a PMOS device isolated from the NMOS device by the isolation region and located partially over the surface. A first one of the NMOS and PMOS devices includes one of: (1) first source/drain regions recessed within the surface; and (2) first source/drain regions extending from the surface. A second one of the NMOS and PMOS devices includes one of: (1) second source/drain regions recessed within the surface wherein the first source/drain regions extend from the surface; (2) second source/drain regions extending from the surface wherein the first source/drain regions are recessed within the surface; and (3) second source/drain regions substantially coplanar with the surface.

[0034] In another embodiment, semiconductor device constructed according to aspects of the present disclosure comprises an isolation region located in a substrate, an NMOS device located partially over a surface of the substrate, and a PMOS device isolated from the NMOS device by the isolation region and located partially over the surface. A first one of the NMOS and PMOS devices includes: (1) first source/drain regions located at least partially in the substrate; and (2) a first gate interposing the first source/drain regions and having a first gate height over the surface. A second one of the NMOS and PMOS devices includes: (1) second source/drain regions located at least partially in the substrate; and (2) a second gate interposing the second source/drain regions and having a second gate height over the surface, wherein the first and second gate heights are substantially different.

[0035] Another embodiment of a semiconductor device constructed according to aspects of the present disclosure includes an isolation region located in a substrate, an NMOS device located partially over a surface of the substrate, and a PMOS device isolated from the NMOS device by the isolation region and located partially over the surface. A first one of the NMOS and PMOS devices includes: (1) first source/drain regions located at least partially in the substrate; (2) a first gate interposing the first source/drain regions; and (3) first spacers on opposing sides of the first gate and each extending from the first gate to a first width. A second one of the NMOS and PMOS devices includes: (1) second source/drain regions located at least partially in the substrate; (2) a second gate interposing the second source/drain regions; and (3) second spacers on opposing sides of the second gate and each extending from the second gate to a second width, wherein the first and second widths are substantially different.

[0036] In another embodiment, a semiconductor device constructed according to aspects of the present disclosure includes an isolation region located in a substrate, an NMOS device located partially over a surface of the substrate, and a PMOS device isolated from the NMOS device by the isolation region and located partially over the surface. A first one of the NMOS and PMOS devices includes one of: (1) first source/drain regions located at least partially within the substrate and comprising SiC; and (2) first source/drain regions located at least partially within the substrate and comprising SiGe. A second one of the NMOS and PMOS devices includes one of: (1) second source/drain regions located at least partially within the substrate and comprising SiC wherein the first source/drain regions comprise SiGe; (2) second source/drain regions located at least partially within the substrate and comprising SiGe wherein the first source/drain regions comprise SiC; and (3) second source/drain regions located at least partially within the substrate and substantially not comprising either of SiC and SiGe.

[0037] The present disclosure also introduces a method of manufacturing semiconductor device. In one embodiment, the method includes forming an isolation region located in a substrate, forming an NMOS device located partially over a surface of the substrate, and forming a PMOS device isolated from the NMOS device by the isolation region and located partially over the surface. A first one of the NMOS and PMOS devices includes one of: (1) first source/drain regions recessed within the surface; and (2) first source/drain regions extending from the surface. A second one of the NMOS and PMOS devices includes one of: (1) second source/drain regions recessed within the surface wherein the first source/drain regions extend from the surface; (2) second source/drain regions extending from the surface wherein the first source/drain regions are recessed within the surface; and (3) second source/drain regions substantially coplanar with the surface.

[0038] An integrated circuit device is also provided in the present disclosure. In one embodiment, the integrated circuit device includes a plurality of semiconductor devices each including an isolation region located in a substrate, an NMOS device located partially over a surface of the substrate, and a PMOS device isolated from the NMOS device by the isolation region and located partially over the surface. In each of ones of the plurality of semiconductor devices, a first one of the NMOS and PMOS devices includes one of: (1) first source/drain regions recessed within the surface; and (2) first source/drain regions extending from the surface. In each of the ones of the plurality of semiconductor devices, a second one of the NMOS and PMOS devices includes one of: (1) second source/drain regions recessed within the surface wherein the first source/drain regions extend from the surface; (2) second source/drain regions extending from the surface wherein the first source/drain regions are recessed within the surface; and (3) second source/drain regions substantially coplanar with the surface. The inte-

grated circuit device also includes a plurality of interconnects connecting ones of the plurality of semiconductor devices.

[0039] Referring to **FIGS. 3***a*-**3***n*, sectional views of an embodiment of a method of making semiconductor devices **301***a* and **301***b* with high drive current are shown. In the example described below, the semiconductor device **301***a* is a p-type MOS device and the semiconductor device **301***b* is an n-type MOS device. In **FIG. 3***a*, gate dielectric **306***a* and **306***b* are formed over a substrate **302** for devices **301***a* and **301***b*, respectively, and electrically isolated from one another by isolation structures **304**. The isolation structures **304** may be shallow trench isolation (STI) structures. Gate electrodes **308***a* and **308***b* are formed over the gate dielectric layer, and hard masks **310***a* and **310***b* are formed over the gate electrodes **308***a* and **308***b*, respectively.

[0040] The substrate **302** may include silicon, silicon-on-insulation (SOI), germanium, germanium-on-insulation (GOI), gallium arsenide (GaAs), strained silicon, diamond, and/or other materials. In one embodiment, the substrate **302** may be substantially similar to the substrate **104** and **205** described above. In another embodiment, the substrate **302** may include an air gap as insulation. For example, devices **301***a* and **301***b* may comprise a "silicon-on-nothing" (SON) structure having a thin insulation layer formed by air and/or other insulator.

[0041] The gate dielectric **306***a* and **306***b* and the gate electrode **308***a* and **308***b* may be substantially similar in composition to the gate dielectric layer **120** and **160** and the gate electrode **124** and **164** shown in **FIG. 1**. Alternatively, the gate dielectric **306***a* and **306***b* and/or gate electrode **308***a* and **308***b* may include multiple layers such as an oxide layer, a high-k dielectric later, a polysilicon layer, amorphous silicon, strained silicon, silicon germanium, silicon carbide, and/or other material layers. Other materials for the gate dielectric **306***a* and **306***b* and the gate electrode **308***a* and **308***b* may include titanium (Ti), tantalum (Ta), molybdenum (Mo), cobalt (Co), tungsten (W), titanium nitride (TiN), tantalum nitride (TaN), tungsten nitride (WN), molybdenum silicide (MoSi), tungsten silicide (WSi), cobalt silicide (CoSi), nickel silicide ($NiSi_x$), metal silicides, germanium nanowire, silicon nanowire, and/or other materials. The gate dielectric **306***a* and **306***b* may comprise a SiO_2 layer and/or nitrided SiO_2. In one embodiment, the high-k layer may be formed from a variety of different materials, such as tantalum nitride, titanium nitride, tantoxide (Ta_2O_5), hafnium dioxide (HfO_2), zirconium dioxide (ZrO_2), hafnium silicon oxy-nitride (HfSiON), hafnium silicide ($HfSi_x$), hafnium silicon nitride ($HfSi_xN_y$), hafnium aluminum dioxide ($HfAlO_2$), nickel silicide ($NiSi_x$), and/or other suitable materials using ALD, CVD, PECVD, evaporation, and/or other methods. With some materials, such as HfSiON, the high-k layer of gate electrode **308***a* and **308***b* may be blanket deposited on the surface of the substrate **302**, while other materials may be selectively deposited. Alternatively, it may be desirable to blanket deposit some materials, including HfSiON, in some fabrication processes, while selectively depositing the same materials in other processes.

[0042] The hard masks **310***a* and **310***b* may include silicon dioxide (SiO_2), silicon nitride (Si_xN_y), silicon oxy-nitride (SiON), titanium nitride (TiN), silicon carbide (SiC), carbide, low-k dielectric, air, and/or other materials. The hard mask **310***a* and **310***b* may be formed by lithography, plasma etch, rapid thermal oxidation (RTO), CVD, PECVD, ALD, PVD, and/or processing techniques.

[0043] In **FIG. 3***b*, a dielectric layer **312** is formed over the gate structures, and a gate spacer layer **314** is formed over the dielectric layer **312**. The dielectric layer **312** and gate spacer layer **314** are then modified to form gate sidewall dielectric **312***a* and **312***b*, and spacers **514***a* and **514***b*, as shown in **FIG. 3***d*. The gate sidewall dielectric **312***a* and **312***b* and/or spacers **314***a* and **314***b* may include dielectric materials such as thermal oxide, tetraethylorthosilicate (TEOS) oxide, silicon dioxide (SiO_2), silicon nitride (Si_xN_y), silicon oxy-nitride (SiON), silicon carbide (SiC), silicon oxy-carbide (SiOC), low-k dielectric, polymer and/or other materials. The dielectric layer **312** and gate spacer layer **314** may be formed by known methods such as deposition. A dummy spacer layer (**316***a* and **316***b*) is then formed over the semiconductor device(s) **301***a* and **301***b* and etched in the device **301***a* using a photoresist **517** over device **301***b*. The dummy spacer layer may include silicon dioxide (SiO_2), silicon nitride (Si_xN_y), silicon oxy-nitride (SiON), low-k dielectric, polymer, air, and/or other materials. The dummy spacer material **316***b* may substantially cover the sidewall of the spacers **314***b* of the device **301***b* and a portion of the gate sidewall dielectric **312***a* of the device **301***a*. The dummy spacer material **316***b* may be formed by thermal oxidation, RTO, ALD, PDL, CVD, PVD, PECVD, spin-on coating, and/or other processing techniques.

[0044] In **FIG. 3***e*, source and drain recesses **318***a* are formed in the substrate **302** located on either side of the gate structure of the device **301***a*. The recesses **518***a* may be formed by a process such as chemical etch, focused ion beam (FIB), and/or plasma etch. For example, the recesses **318***a* may be formed by a chemical etch of the exposed substrate interposed by the isolation regions **304** and the spacers **316***a*. In one embodiment, a portion of the substrate **302** may be etched located below the spacer **316***a*. In **FIG. 3***f*, raised source and drain regions **320***a* are formed or built-up in the recesses **318***a*. For example, the source and drain regions **320***a* may be formed by selective epitaxial growth (SEG), CVD, PECVD, PVD, PDL, ALD, spin-on formation, and/or other techniques. The source and drain regions **320***a* may include materials such as amorphous silicon, polysilicon, strained silicon, germanium, silicon germanium, silicon carbide, and/or other materials.

[0045] In **FIG. 3***g*, the spacers **514***a* and **514***b*, dummy spacer **316***a*, and dummy material **316***b* are removed from the semiconductor device(s) **301***a* and **301***b*. The spacers **314***a* and **314***b*, dummy spacer **316***a*, and dummy material **316***b* may be removed by chemical etch, focused ion beam (FIB), plasma etch, CMP, and/or other processing techniques now known or later developed. Further, the hard masks **310***a* and **310***b* are removed from both devices **301***a* and **301***b*, respectively. In prior processes, the hard masks of the two devices are typically removed at different steps in the fabrication process. The hard masks **310***a* and **310***b* may be removed by plasma etch and/or chemical etch in an oxygen (O_2) containing plasma environment, for example.

[0046] Referring to **FIG. 3***h*, the device **301***a* is protected by a photoresist **321***a* while source and drain regions **320***b* are formed for the device **301***b* are formed on either side of

its gate structure. In **FIG. 3***i*, the photoresist **321***a* is removed and a photoresist **321***b* is used to protect the device **301***b* while lightly doped drain regions **320***a* are formed for the device **301***a*. It may be suitable for the devices **301***a* and **301***b* to include lightly doped drains (LLD) and/or heavily doped regions. The source and drain regions **320***a* and **320***b* may include N-type and/or P-type impurities and may be formed by ion implantation and/or thermal diffusion. The impurities may include phosphorous, boron, antimony, arsenic, and/or other materials. For example, the ion implantation may include an ion implant energy ranging between about 1 KeV and about 100 KeV and the dose of ion implantation of may range between about 1×10^{14} cm^{-2} and about 5×10^{18} cm^{-2}.

[**0047**] In **FIG. 3***j*, the photoresist **321***b* over the device **301***b* is removed, and a liner layer **324** and a protection layer **326** are formed over the semiconductor devices **301***a* and **301***b*. The liner layer **324** may be an oxide deposited over the devices, the protection layer **326** may be a nitride deposited over the devices. As further examples, the liner layer **324** and/or the protection layer **326** may include silicon dioxide (SiO_2), silicon nitride (Si_xN_y), silicon oxy-nitride (SiON), silicon carbide (SiC), silicon oxy-carbide (SiOC), photoresist, and/or other materials. The liner layer **324** and/or the protection layer **326** may be formed by thermal oxidation, ALD, PDL, CVD, PVD, PECVD, spin-on coating, and/or other suitable processes.

[**0048**] In **FIG. 3***k*, the liner layer **324** and the protection layer **326** are patterned, thereby forming hard masks **325***a* and **325***b*, and the spacers **327***a* and **327***b*. The hard masks **325***a* and **325***b*, and the spacers **327***a* and **327***b* may be formed by plasma etch, chemical etch, CMP, and/or other processing techniques.

[**0049**] In **FIG. 3***l*, a photoresist **327***a* is formed over the semiconductor device **301***a*, so that a portion of the doped regions **320***b* and the hard mask **325***b* of the device **301***b* are removed. It may be seen that the spacers **327***b* of the device **301***b* may also be etched during this process, and producing narrower spacers than that of the device **301***a*. Further, more heavily deeper doped regions **328***b* are formed on either side of the gate structure of the device **301***b*. The photoresist **327***a* is then removed.

[**0050**] In the embodiment shown in **FIG. 3***l*, the spacers **327***a* of the device **301***a* may have a width, W_P, that may be greater than the width, W_N, of the spacers **327***b* of the device **301***b*. For example, the width, W_P, of the spacers **327***a* may be 10-50% greater than the spacers **327***b*. The narrower spacer of the device **301***b* may advantageously induce higher strain in the device. Alternatively, the width W_P of the spacers **327***a* may be substantially similar to the width, W_N, of the spacers **327***b*.

[**0051**] In **FIG. 3***m*, another photoresist **329***b* is disposed over the semiconductor device **301***b*, and more heavily and deeper doped regions **328***a* are formed in the semiconductor device **301***a*. The doped regions **328***a* may be formed by ion implantation, thermal diffusion, and/or other processing techniques.

[**0052**] In **FIG. 3***n*, the photoresist **329***b* is removed, and salicided contacts **332***a* and **332***b* are formed atop the respective gate electrodes. An etch stop layer **330***a* and **330***b* is disposed over the gate electrodes **308***a* and **308***b* and doped regions **320***a* and **328***b* of the semiconductor devices **301***a* and **301***b*, respectively. The salicided contacts **332***a* and **332***b* may include the formation of a metal silicide such as cobalt silicide ($CoSi_x$), molybdenum silicide ($MoSi_x$), nickel silicide ($NiSi_x$), titanium silicide ($TiSi_x$), and/or other materials. The formation of the salicided contacts **532***a* and **532***b* may also include an anneal. The salicided contacts **332***a* and **332***b* may be formed by lithography, chemical etch, plasma etch, CVD, PECVD, ALD, PDL, PVD, and/or other processing techniques. The etch stop layer **330***a* and **330***b* may include silicon nitride (Si_xN_y), silicon dioxide (SiO_2), silicon oxy-nitride (SiON), and/or other materials. In one embodiment, the etch stop layer **330***a* and **330***b* may be substantially similar in composition to the etch stop layer **180** described above. Alternatively, the etch stop layer **330***a* and **330***b* may include a stress level that may range between about +0.001 and about +50 GPa for tensile film and between about −0.001 and about −50 GPa for compressive film. The etch stop layer **330***a* and **330***b* may be formed by CVD, ALD, PECVD, PDL, spin-on coating, and/or other techniques.

[**0053**] Additional subsequent processing steps may be performed to the semiconductor device(s) **301***a* and **301***b* as necessary but are not shown or described herein.

[**0054**] As shown in **FIG. 3***n*, the semiconductor device **301***a*, a P-type MOS device, comprises raised source and drain regions, and the semiconductor device **301***b*, an N-type MOS device, comprises recessed source and drain regions. Further the two devices have a single polysilicon thickness but dual spacer thickness, where the device **301***b* has thinner spacers **327***b* than the spacers **327***a* of the device **301***a*. The processing described above provides the ability to have good control of the critical dimensions of the polysilicon layer of the devices. Further, gate oxide and shallow trench isolation damage or loss is eliminated or minimized.

[**0055**] In one embodiment, the processing method described above may also be adapted for forming the NMOS device **116** and/or the PMOS device **112** of the semiconductor device **100** shown in **FIG. 1**. Alternatively, the manufacturing steps and/or portions thereof may be adapted for forming other microelectronic devices such as electrically programmable read only memory (EPROM) cell, an electrically erasable programmable read only memory (EEPROM) cell, a static random access memory (SRAM) cell, a dynamic random access memory (DRAM) cell, a single electron transistor (SET), a "fin shaped" field effect transistor (FinFET), a diode, a capacitor, an inductor, and/or other microelectronic devices (hereafter collectively referred to as microelectronic devices). The manufacturing steps may also include a myriad of known processing techniques such as immersion lithography, imprint lithography, maskless lithography, chemical etch, plasma etch, thermal oxidation, atomic layer deposition (ALD), chemical vapor deposition (CVD), physical vapor deposition (PVD), plasma enhanced CVD (PECVD), pulsed deposition layering (PDL), focused ion beam (FIB), chemical mechanical polishing or chemical mechanical planarization (hereafter referred to as CMP), spin-on coating, and/or other processing techniques, and further include techniques to be developed in the future.

[**0056**] Referring now to **FIGS. 4***a*-**4***j* for sectional views of another embodiment of a method for making semicon-

ductor devices **401***a* and **401***b* with high drive current. The semiconductor device **401***a* may be a P-type MOS device and the semiconductor device **401***b* may be an N-type MOS device. In **FIG. 4***a*, gate dielectric **406***a* and **406***b* are formed over a substrate **402** for devices **401***a* and **401***b*, respectively, and electrically isolated from one another by isolation structures **404**. The isolation structures **404** may be shallow trench isolation (STI) structures. Gate electrodes **408***a* and **408***b* are formed over the gate dielectric layer, and hard masks **410***a* and **410***b* are formed over the gate electrodes **408***a* and **408***b*, respectively.

[**0057**] The substrate **402** may include silicon, silicon-on-insulation (SOI), germanium, germanium-on-insulation (GOI), gallium arsenide (GaAs), strained silicon, silicon germanium, silicon carbide, diamond, and/or other materials. In one embodiment, the substrate **402** may be substantially similar to the substrate **104** and **205** described above. In another embodiment, the substrate **402** may include an air gap to provide insulation for the microelectronic device **400**. For example, a "silicon-on-nothing" (SON) structure may include the semiconductor device(s) **401***a* and **401***b* each having a thin insulation layer formed by air and/or other insulators. The gate dielectric **406***a* and **406***b* and the gate electrode **408***a* and **408***b* may be substantially similar in composition to the gate dielectric layer **120** and **160** and the gate electrode **124** and **164** shown in **FIG. 1** and described above.

[**0058**] Alternatively, the gate dielectric **406***a* and **406***b* and/or gate electrode **408***a* and **408***b* may include multiple layers such as an oxide layer, a high-k dielectric later, a polysilicon layer, strained silicon, silicon germanium, silicon carbide, and/or other material layers. Other materials for the gate dielectric **406***a* and **406***b* and the gate electrode **408***a* and **408***b* may include titanium (Ti), tantalum (Ta), molybdenum (Mo), cobalt (Co), tungsten (W), titanium nitride (TiN), tantalum nitride (TaN), tungsten nitride (W_N), molybdenum silicide (MoSi), tungsten silicide (WSi), cobalt silicide (CoSi), nickel silicide ($NiSi_x$), metal silicides, germanium nanowire, silicon nanowire, and/or other materials. The gate dielectric **406***a* and **407***b* may comprise a SiO_2 layer and/or nitrided SiO_2. Alternatively, the gate dielectric **406***a* and **406***b* material may be replaced by the high-k dielectric. In one embodiment, the high-k layer may be formed from a variety of different materials, such as tantalum nitride, titanium nitride, tantoxide (Ta_2O_5), hafnium dioxide (HfO_2), zirconium dioxide (ZrO_2), hafnium silicon oxy-nitride (HfSiON), hafnium silicide ($HfSi_x$), hafnium silicon nitride ($HfSi_xN_y$), hafnium aluminum dioxide ($HfAlO_2$), nickel silicide ($NiSi_x$), and/or other suitable materials using ALD, CVD, PECVD, evaporation, and/or other methods. Generally, the high-k layer may have a thickness between approximately 2 and 500 Angstroms. With some materials, such as HfSiON, the high-k layer of gate electrode **408***a* and **408***b* may be blanket deposited on the surface of substrate **402**, while other materials may be selectively deposited. Alternatively, it may be desirable to blanket deposit some materials, including HfSiON, in some fabrication processes, while selectively depositing the same materials in other processes.

[**0059**] The hard masks **410***a* and **410***b* may include silicon dioxide (SiO_2), silicon nitride (Si_xN_y), silicon oxy-nitride (SiON), titanium nitride (TiN), silicon carbide (SiC), carbide, low-k dielectric, air, and/or other materials. The hard mask **410***a* and **410***b* may be formed by lithography, plasma etch, rapid thermal oxidation (RTO), CVD, PECVD, ALD, PVD, and/or other processing techniques now known or to be developed.

[**0060**] The lightly doped regions **422***a* and **422***b* may include P-type and N-type dopants for the devices **401***a* and **401***b*, respectively. The doped regions **422***a* and **422***b* may be formed by ion implantation, thermal diffusion, RTA, and/or other processing techniques. The doped regions **422***a* and **422***b* may also include lightly doped regions (LDD) and/or heavily doped regions in one embodiment. The doped regions **422***a* and **422***b* may include impurities such as phosphorous, boron, antimony, arsenic, and/or other materials. For example, the formation of the doped regions **422***a* and **422***b* by ion implantation may include an ion implant energy ranging between about 1 KeV and about 100 KeV and the dose of ion implantation of may range between about 1×10^{13} cm^{-2} and about 5×10^{16} cm^{-2}.

[**0061**] In **FIG. 4***b*, sidewall dielectric layers **412** and **414**, and spacer material **415** are disposed over the semiconductor device(s) **410***a* and **401***b* and are subsequently processed, such as by etching, to form sidewall dielectric structures **412***a*, **412***b*, **414***a* and **414***b*, and spacers **415***a* and **415***b*, as shown in **FIG. 4***c*. Note the dielectric structures **714***a* and **714***b* are substantially L-shaped. A dummy spacer layer **416** is formed over the semiconductor devices **401***a* and **401***b*. Low temperature processing, such as using a temperature less than 600° C., to form the sidewall dielectric and spacer materials is preferred to reduce lightly doped drain diffusion.

[**0062**] The sidewall dielectric layers **412** and **414** may be a liner oxide layer and a nitride layer formed over the devices by deposition. In particular, the sidewall dielectric layers **412** and **414** may include thermal oxide (SiO_2), TEOS oxide, silicon nitride (Si_xN_y), silicon dioxide (SiO_2), silicon oxy-nitride (SiON), polymer and/or other materials. The sidewall dielectric layers **412** and **414** may also include multiple layers and/or may include a single layer, in one embodiment. The sidewall dielectric layers **412** and **414** may be formed by RTO, CVD, PVD, PECVD, ALD, CMP, chemical etching, plasma etching, and/or other processing techniques. The spacer material **415** may include thermal oxide (SiO_2), TEOS oxide, silicon nitride (Si_xN_y), silicon dioxide (SiO_2), polymer and/or other materials. The spacer material **415** may also include multiple layers and/or may include a single layer, in one embodiment. The spacer material **415** may be formed by RTO, CVD, PVD, PECVD, ALD, CMP, chemical etching, plasma etching, and/or other processing techniques. The sidewall dielectric structures **412***a*, **412***b*, **414***a* and **414***b*, and spacers **415***a* and **415***b* may be formed by chemical etching, plasma etching, CMP, focused ion beam (FIB), and/or other processing techniques.

[**0063**] In **FIG. 4***d*, the dummy spacer material **416** is processed to form the dummy spacers **416***a* and **416***b*. The dummy spacer material **416** may include silicon dioxide (SiO_2), silicon nitride (Si_xN_y), silicon oxy-nitride (SiON), silicon oxy-carbide (SiOC), polymer, and/or other materials. The spacer material **416** may be formed by CVD, PECVD, ALD, spin-on coating, and/or other processing techniques, for example, and the dummy spacers **416***a* and **416***b* may be formed by chemical etch, plasma etch, CMP, focused ion beam (FIB), and/or other processing techniques. In **FIG. 4***d*, a photoresist **417***b* is provided over the device **401***b* so that

portions of the dummy spacer material **416***a* is removed from the device **401***a*, and recessed source and drain regions **418***a* are also formed in the substrate **402** on either side of the gate structure of the device **401***a*.

[**0064**] The recessed source and drain regions **418***a* may be formed by a process such as chemical etch, focused ion beam (FIB), and/or plasma etch. In particular, the recessed regions **418***a* may be formed by a chemical etch of the exposed substrate interposed by the isolation regions **404** and the dummy spacers **416***a*. In one embodiment, a portion of the substrate **402** below the dummy spacers **416***a* may be removed, as shown in **FIG. 4***d*.

[**0065**] In **FIG. 4***e*, the photoresist **417***b* is removed, and doped source and drain regions **420***a* are formed or built-up in the recessed regions **418***a*. The doped source and drain regions **420***a* may be formed by selective epitaxial growth (SEG), CVD, PECVD, PVD, PDL, ALD, spin-on formation, and/or other techniques now know or to be developed. The doped source and drain regions **420***a* may include materials such as amorphous silicon, polysilicon, strained silicon, germanium, silicon germanium, silicon carbide, and/or other materials. Low temperature processing, such as using a temperature less than 700° C., to form the doped regions **420***a* is preferred to reduce lightly doped drain diffusion.

[**0066**] In **FIG. 4***f*, a photoresist **421***a* is disposed over the semiconductor device **401***a*. Further, the dummy spacer **716***b* is removed from the device **401***b*. The spacer material **416***b* may be removed by chemical etch, plasma etch, CMP focused ion beam (FIB), and/or other processing techniques. Deeper and more heavily doped regions **428***b* are also formed in the substrate **402** in the semiconductor device **401***b*. The doped regions **428***b* may include N-type impurities, and may be formed by ion implantation, thermal diffusion, RTA, and/or other processing techniques. The doped regions **428***b* may include heavy doped regions forming the source/drain regions of the semiconductor device **701***b*. The ion implantation may include an ion implant energy ranging between about 5 KeV and about 100 KeV and the dose of ion implantation of may range between about 1×10^{14} cm^{-2} and about 5×10^{18} cm^{-2}.

[**0067**] In **FIG. 4***g*, the photoresist **421***a* is removed from the device **401***a*. Further, the hard masks **410***a* and **410***b* are removed from the semiconductor devices **401***a* and **401***b*. The photoresist **421***a* may be removed by plasma etch and/or chemical etch. For example, the mask **421***a* may be removed by an oxygen (O_2) containing plasma environment. The hard masks **410***a* and **410***b* may be removed by chemical and/or plasma etch. For example, the hard masks **410***a* and **410***b* may be removed by hot phosphoric (H_2PO_4) acid, ammonium hydroxide ($NH_{40}H$), hydrochloric acid (HCl), hydrofluoric acid (HF), sulfuric acid (H_2SO_4), and/or other etchant chemicals. The hard masks **420***a* and **420***b* may also be removed by ion bombardment in an inert plasma comprising argon, hydrogen, xenon, and/or other gases.

[**0068**] In **FIG. 4***h*, a photoresist **421***b* is formed over the semiconductor device **401***a*. The mask **421***b* may include photoresist, silicon dioxide (SiO_2), silicon nitride (Si_xN_y), and/or other materials. The mask **421***b* may be formed by spin-on coating, CVD, and/or other processing techniques. Further, more heavily doped source and drain regions **428***a* are formed in the substrate **402** for the semiconductor device **401***a*. The doped regions **428***a* which may include P-type impurities, and may be formed by ion implantation, thermal diffusion, RTA, and/or other processing techniques. The ion implantation may include an ion implant energy ranging between about 5 KeV and about 100 KeV and the dose of ion implantation of may range between about 1×10^{14} cm^{-2} and about 5×10^{18} cm^{-2} for example.

[**0069**] In **FIG. 4***i*, the photoresist **421***b* is removed from the device **401***b*, and salicided contacts **432***a* and **432***b* are formed over the gate, source and drain of the devices **401***a* and **401***b*. The salicided contacts **432***a* and **432***b* may include the formation of a metal silicide such as cobalt silicide ($CoSi_x$), molybdenum silicide ($MoSi_x$), nickel silicide ($NiSi_x$), titanium silicide ($TiSi_x$), and/or other materials. The formation of the salicided contacts **732***a* and **732***b* may also include an anneal. The salicided contacts **732***a* and **732***b* may be formed by lithography, chemical etch, plasma etch, CVD, PECVD, ALD, PDL, PVD, and/or other processing techniques.

[**0070**] Further in **FIG. 4***j*, an etch stop layer **430***a* and **430***b* are formed over the semiconductor device(s) **401***a* and **401***b*. The etch stop layer **430***a* and **430***b* may include silicon nitride (Si_xN_y), silicon dioxide (SiO_2), silicon oxy-nitride (SiON), and/or other materials. In one embodiment, the etch stop layer **430***a* and **430***b* may be substantially similar in composition to the etch stop layer **180** described above. Alternatively, the etch stop layer **430***a* and **430***b* may include a stress level that may range between about +0.001 and about +50 GPa for tensile film and between about −0.001 and about −50 GPa for compressive film. The etch stop layer **430***a* and **430***b* may be formed by CVD, ALD, PECVD, PDL, spin-on coating, and/or other techniques.

[**0071**] Subsequent processing steps may be performed to the semiconductor devices **401***a* and **401***b* such as metallization, testing and packaging, etc.

[**0072**] Referring now to **FIGS. 5***a-i* for another embodiment of a method for manufacturing a microelectronic device **500** with high drive current. In **FIG. 5***a*, gate structures including a gate dielectric **506***a* and **506***b* and gate electrodes **508***a* and **508***b* are formed for semiconductor devices **501***a* and **501***b*, respectively. Gate electrodes **508***a* and **508***b* may be pre-doped with appropriate P-type and N-type dopants, respectively. Hard masks **510***a* and **510***b* are also formed over each gate structure. Further, shallow doped drain and source regions **522***a* and **522***b* are formed on either sides of the gate structures of each device **501***a* and **501***b*. Isolation structures **504** are formed in the substrate **502** to electrically isolate the devices **501***a* and **501***b*.

[**0073**] The substrate **502** may include silicon, silicon-on-insulation (SOI), germanium, germanium-on-insulation (GOI), gallium arsenide (GaAs), strained silicon, diamond, and/or other materials. In another embodiment, the substrate **502** may include an air gap to provide insulation for the microelectronic device **500**. For example, a "silicon-on-nothing" (SON) structure may include the semiconductor devices **501***a* and **501***b* each having a thin insulation layer formed by air and/or other insulator. The gate dielectric **506***a* and **506***b* and the gate electrode **508***a* and **508***b*, in one embodiment, may be substantially similar in composition to the gate dielectric layer **120** and **160** and the gate electrode **124** and **164** shown in **FIG. 1**. Alternatively, the gate dielectric **506***a* and **506***b* and/or gate electrode **508***a* and **508***b* may include multiple layers such as an oxide layer, a

high-k dielectric later, a polysilicon layer, strained silicon, silicon germanium, silicon carbide, and/or other material layers. Other materials for the gate dielectric **506***a* and **506***b* and the gate electrode **508***a* and **508***b* may include titanium (Ti), tantalum (Ta), molybdenum (Mo), cobalt (Co), tungsten (W), titanium nitride (TiN), tantalum nitride (TaN), tungsten nitride (W_N), molybdenum silicide (MoSi), tungsten silicide (WSi), cobalt silicide (CoSi), nickel silicide ($NiSi_x$), metal silicides, germanium nanowire, silicon nanowire, and/or other materials. The gate dielectric **506***a* and **506***b* may comprise a SiO_2 layer and/or nitrided SiO_2. In one embodiment, the high-k layer may be formed from a variety of different materials, such as tantalum nitride, titanium nitride, tantoxide (Ta_2O_5), hafnium dioxide (HfO_2), zirconium dioxide (ZrO_2), hafnium silicon oxy-nitride (HfSiON), hafnium silicide ($HfSi_x$), hafnium silicon nitride ($HfSi_xN_y$), hafnium aluminum dioxide ($HfAlO_2$), nickel silicide ($NiSi_x$), and/or other suitable materials using ALD, CVD, PECVD, evaporation, and/or other methods. With some materials, such as HfSiON, the high-k layer of gate electrode **508***a* and **508***b* may be blanket deposited on the surface of substrate **502**, while other materials may be selectively deposited. Alternatively, it may be desirable to blanket deposit some materials, including HfSiON, in some fabrication processes, while selectively depositing the same materials in other processes.

[**0074**] The hard masks **510***a* and **510***b* may include silicon dioxide (SiO_2), silicon nitride (Si_xN_y), silicon oxy-nitride (SiON), titanium nitride (TiN), silicon carbide (SiC), carbide, low-k dielectric, air, and/or other materials. The hard mask **510***a* and **510***b* may be formed by lithography, plasma etch, rapid thermal oxidation (RTO), CVD, PECVD, ALD, PVD, and/or processing techniques.

[**0075**] The doped source and drain regions **522***a* and **522***b* may include N-type and/or P-type doped regions formed by ion implantation, thermal diffusion, RTA, and/or other processing techniques. The doped regions **522***a* and **522***b* may be lightly doped drains (LDD) and may include impurities such as phosphorous, boron, antimony, arsenic, and/or other materials.

[**0076**] In **FIG. 5***b*, sidewall dielectric layers **512** and **514**, and a spacer material **515** are formed over the semiconductor devices **510***a* and **501***b*, preferably using a low temperature process to reduce LDD diffusion. The sidewall dielectric layers **512** and **514** may include thermal oxide (SiO_2), TEOS oxide, silicon nitride (Si_xN_y), silicon dioxide (SiO_2), silicon oxy-nitride (SiON), polymer and/or other materials. The spacer material **515** may include thermal oxide (SiO_2), TEOS oxide, silicon nitride (Si_xN_y), silicon dioxide (SiO_2), polymer and/or other materials. For example, dielectric layers **512** and **514** may comprise a liner oxide layer and a nitride layer, and the spacer material **515** may comprise an oxide material. The sidewall dielectric layers **512** and **514** and spacer layer **515** may be formed by RTO, CVD, PVD, PECVD, ALD, CMP, chemical etching, plasma etching, and/or other processing techniques.

[**0077**] In **FIG. 5***c*, the sidewall dielectric layers **512** and **514**, and a spacer material **515** are subsequently processed forming sidewall dielectric **512***a*, **512***b*, **514***a* and **514***b*, and spacers **515***a* and **515***b*. The sidewall dielectric **512***a*, **512***b*, **514***a* and **514***b*, and spacers **515***a* and **515***b* may be formed by chemical etching, plasma etching, CMP, focused ion beam (FIB), and/or other processing techniques.

[**0078**] Further, a dummy spacer material **516** is formed over the semiconductor devices **501***a* and **501***b*, and subsequently processed forming the dummy spacers **516***a* and **516***b*. The dummy spacer material **516** may include silicon dioxide (SiO_2), silicon nitride (Si_xN_y), silicon oxy-nitride (SiON), silicon oxy-carbide (SiOC), polymer, and/or other materials. The spacer material **516** may be formed by CVD, PECVD, ALD, spin-on coating, and/or other processing techniques, and may be formed by chemical etch, plasma etch, CMP, focused ion beam (FIB), and/or other processing techniques.

[**0079**] In **FIG. 5***d*, a photoresist **517***b* is formed over the semiconductor device **501***b* so that the device **501***a* may be processed. An oxide etch process may be used to remove material layers above the hard mask **510***a* disposed over the gate structure. Another etch process may also be used to create recessed source and drain regions **518***a* in the substrate **502**. The recessed source and drain regions **518***a* may be formed by a process such as chemical etch, focused ion beam (FIB), and/or plasma etch. In the embodiment shown in **FIG. 5***d*, a portion of the substrate **502** extending partially below the spacer **516***a* is also removed.

[**0080**] In **FIG. 5***e*, the photoresist **517***b* is removed from the device **501***b* and source and drain regions **520***a* are built-up in the recessed regions **518***a*, preferably using a low temperature process to reduce LDD diffusion. The source and drain regions **520***a* may be formed by, for example, selective epitaxial growth (SEG), CVD, PECVD, PVD, PDL, ALD, spin-on formation, and/or other suitable techniques now know or later developed. The source and drain regions **520***a* may include materials such as amorphous silicon, polysilicon, strained silicon, germanium, silicon germanium, silicon carbide, and/or other materials. The source and drain regions **520***a* may also be doped "in-situ" during the SEG process, for example. In this process, dopants such as boron, phosphorous, arsenic, germanium, carbon, and/or other semiconductor materials may be introduced during the SEG process. The dopants may be introduced in gaseous form, which may include diborane (B_2H_6), Arsine (AsH_3), phosphine (PH_3), germane (GeH_4), phosphoryl chloride ($POCL_3$), boron bromide (BBr_3), hydrocarbons, and/or other gases/chemicals.

[**0081**] In **FIG. 5***f*, a photoresist **521***a* is disposed over the semiconductor device **501***a* for processing of the semiconductor device **501***b*. The dummy spacer material **516***b* is removed from the device **501***b*, and deeper source and drain doped regions **528***b* are formed. The spacer material **516***b* may be removed by chemical etch, plasma etch, CMP focused ion beam (FIB), and/or other processing techniques, for example. The doped regions **528***b* may include N-type impurities, and may be formed by ion implantation, thermal diffusion, RTA, and/or other processing techniques. The ion implantation process may use an ion implant energy ranging between about 5 KeV and about 100 KeV and the dose of ion implantation of may range between about 1×10^{14} cm^{-2} and about 5×10^{18} cm^{-2}, for example.

[**0082**] In **FIG. 5***g*, the photoresist **521***a* is removed from the device **501***a*. Further, the hard masks **510***a* and **510***b* are removed from the gate structures of the semiconductor devices **501***a* and **501***b*. The hard masks **510***a* and **510***b* may be removed from the semiconductor devices by chemical and/or plasma etch. For example, the hard masks **510***a* and

510*b* may be removed by hot phosphoric (H_2PO_4) acid, ammonium hydroxide (NH_4OH), hydrochloric acid (HCl), hydrofluoric acid (HF), sulfuric acid (H_2SO_4), and/or other chemicals. The hard mask **510***a* and **510***b* may also be removed by ion bombardment in an inert plasma comprising argon, hydrogen, xenon, and/or other gases.

[**0083**] Because the deeper doped source and drain regions were doped in-situ (**FIG. 5***g*), a process of source and drain implantation such as that shown in **FIG. 4***h* is not required. Therefore, salicided contacts **532***a* and **532***b* are formed for the gate, source and drains of the devices **501***a* and **501***b*, respectively, as shown in **FIG. 5***h*. The salicided contacts **532***a* and **532***b* may include the formation of a metal silicide such as cobalt silicide ($CoSi_x$), molybdenum silicide ($MoSi_x$), nickel silicide ($NiSi_x$), titanium silicide ($TiSi_x$), and/or other materials. The formation of the salicided contacts **532***a* and **532***b* may also include an anneal. The salicided contacts **532***a* and **532***b* may be formed by lithography, chemical etch, plasma etch, CVD, PECVD, ALD, PDL, PVD, and/or other processing techniques.

[**0084**] In **FIG. 5***i*, etch stop layer **530***a* and **530***b* are formed over the semiconductor devices **501***a* and **501***b*. The etch stop layer **530***a* and **530***b* may include silicon nitride (Si_xN_y), silicon dioxide (SiO_2), silicon oxy-nitride (SiON), and/or other materials. Alternatively, the etch stop layer **530***a* and **530***b* may include a stress level that may range between about +0.001 and about +50 GPa for tensile film and between about −0.001 and about −50 GPa for compressive film. The etch stop layer **530***a-b* may be formed by CVD, ALD, PECVD, PDL, spin-on coating, and/or other techniques.

[**0085**] Referring now to **FIGS. 6***a-i*, sectional views of yet another embodiment of a method for manufacturing a microelectronic device **600** having high drive current is shown. The semiconductor device **601***a* may be a P-type MOS device and the semiconductor device **601***b* may be an N-type MOS device. In **FIG. 6***a*, gate dielectric **606***a* and **606***b* are formed over a substrate **602** for devices **601***a* and **601***b*, respectively, and electrically isolated from one another by isolation structures **604**. The isolation structures **604** may be shallow trench isolation (STI) structures. Gate electrodes **608***a* and **608***b* are formed over the gate dielectric layer, and hard masks **610***a* and **610***b* are formed over the gate electrodes **608***a* and **608***b*, respectively.

[**0086**] As described above, the substrate **602** may include silicon, silicon-on-insulation (SOI), germanium, germanium-on-insulation (GOI), gallium arsenide (GaAs), strained silicon, silicon germanium, silicon carbide, diamond, and/or other materials. In one embodiment, the substrate **602** may be substantially similar to the substrate **104** and **205** described above. In another embodiment, the substrate **602** may include an air gap. For example, a "silicon-on-nothing" (SON) structure may include the semiconductor device(s) **601***a* and **601***b* each having a thin insulation layer formed by air and/or other insulators. The gate dielectric **606***a* and **606***b* and the gate electrode **608***a* and **608***b* may be substantially similar in composition to the gate dielectric layer **120** and **160** and the gate electrode **124** and **164** shown in **FIG. 1** and described above.

[**0087**] Alternatively, the gate dielectric **606***a* and **606***b* and/or gate electrode **608***a* and **608***b* may include multiple layers such as an oxide layer, a high-k dielectric later, a polysilicon layer, strained silicon, silicon germanium, silicon carbide, and/or other material layers. Other materials for the gate dielectric **606***a* and **606***b* and the gate electrode **608***a* and **608***b* may include titanium (Ti), tantalum (Ta), molybdenum (Mo), cobalt (Co), tungsten (W), titanium nitride (TiN), tantalum nitride (TaN), tungsten nitride (WN), molybdenum silicide (MoSi), tungsten silicide (WSi), cobalt silicide (CoSi), nickel silicide ($NiSi_x$), metal silicides, germanium nanowire, silicon nanowire, and/or other materials. The gate dielectric **606***a* and **607***b* may comprise a SiO_2 layer and/or nitrided SiO_2. Alternatively, the gate dielectric **606***a* and **606***b* material may be replaced by the high-k dielectric. In one embodiment, the high-k layer may be formed from a variety of different materials, such as tantalum nitride, titanium nitride, tantoxide (Ta_2O_5), hafnium dioxide (HfO_2), zirconium dioxide (ZrO_2), hafnium silicon oxy-nitride (HfSiON), hafnium silicide ($HfSi_x$), hafnium silicon nitride ($HfSi_xN_y$), hafnium aluminum dioxide ($HfAlO_2$), nickel silicide ($NiSi_x$), and/or other suitable materials using ALD, CVD, PECVD, evaporation, and/or other methods. For example, the high-k layer may have a thickness between approximately 2 and 500 Angstroms. With some materials, such as HfSiON, the high-k layer of gate electrode **608***a* and **608***b* may be blanket deposited on the surface of substrate **602**, while other materials may be selectively deposited. Alternatively, it may be desirable to blanket deposit some materials, including HfSiON, in some fabrication processes, while selectively depositing the same materials in other processes.

[**0088**] The hard masks **610***a* and **610***b* may include silicon dioxide (SiO_2), silicon nitride (Si_xN_y), silicon oxy-nitride (SiON), titanium nitride (TiN), silicon carbide (SiC), carbide, low-k dielectric, air, and/or other materials. The hard mask **610***a* and **610***b* may be formed by lithography, plasma etch, rapid thermal oxidation (RTO), CVD, PECVD, ALD, PVD, and/or other processing techniques now known or to be developed.

[**0089**] The lightly doped regions **622***a* and **622***b* may include P-type and N-type dopants for the devices **601***a* and **601***b*, respectively. The doped regions **622***a* and **622***b* may be formed by ion implantation, thermal diffusion, RTA, and/or other processing techniques. The doped regions **622***a* and **622***b* may also include lightly doped regions (LDD) and/or heavily doped regions in one embodiment. The doped regions **622***a* and **622***b* may include impurities such as phosphorous, boron, antimony, arsenic, and/or other materials. For example, the formation of the doped regions **622***a* and **622***b* by ion implantation may include an ion implant energy ranging between about 1 KeV and about 100 KeV and the dose of ion implantation of may range between about 1×10^{13} cm^{-2} and about 5×10^{16} cm^{-2}, for example.

[**0090**] In **FIG. 6***b*, sidewall dielectric layers **612** and **614**, and a spacer material **615** are formed over the semiconductor devices **610***a* and **601***b*, preferably using a low temperature process to reduce LDD diffusion. The sidewall dielectric layers **612** and **614** may include thermal oxide (SiO_2), TEOS oxide, silicon nitride (Si_xN_y), silicon dioxide (SiO_2), silicon oxy-nitride (SiON), polymer and/or other materials. The spacer material **615** may include thermal oxide (SiO_2), TEOS oxide, silicon nitride (Si_xN_y), silicon dioxide (SiO_2), polymer and/or other materials. For example, dielectric layers **612** and **614** may comprise a liner oxide layer and a nitride layer, and the spacer material **615** may comprise an

oxide material. The sidewall dielectric layers **612** and **614** and spacer layer **615** may be formed by RTO, CVD, PVD, PECVD, ALD, CMP, chemical etching, plasma etching, and/or other processing techniques.

[**0091**] In **FIG. 6***c*, the sidewall dielectric layers **612** and **614**, and a spacer material **615** are subsequently processed forming sidewall dielectric **612***a*, **612***b*, **614***a* and **614***b*, and spacers **615***a* and **615***b*. The sidewall dielectric **612***a*, **612***b*, **614***a* and **614***b*, and spacers **615***a* and **615***b* may be formed by chemical etching, plasma etching, CMP, focused ion beam (FIB), and/or other processing techniques.

[**0092**] Further, a dummy spacer material **616** is formed over the semiconductor devices **601***a* and **601***b*, and subsequently processed forming the dummy spacers **616***a* and **616***b*. The dummy spacer material **616** may include silicon dioxide (SiO_2), silicon nitride (Si_xN_y), silicon oxy-nitride (SiON), silicon oxy-carbide (SiOC), polymer, and/or other materials. The spacer material **616** may be formed by CVD, PECVD, ALD, spin-on coating, and/or other processing techniques, and may be formed by chemical etch, plasma etch, CMP, focused ion beam (FIB), and/or other processing techniques.

[**0093**] In **FIG. 6***d*, a photoresist **617***b* is formed over the semiconductor device **601***b* so that the device **601***a* may be processed. An oxide etch process may be used to remove material layers above the hard mask **610***a* disposed over the gate structure. Another etch process may also be used to create recessed source and drain regions **618***a* in the substrate **602**. The recessed source and drain regions **618***a* may be formed by a process such as chemical etch, focused ion beam (FIB), and/or plasma etch. In the embodiment shown in **FIG. 6***d*, a portion of the substrate **602** extending partially below the spacer **616***a* is also removed.

[**0094**] In **FIG. 6***e*, the photoresist **617***b* is removed from the device **601***b* and source and drain regions **620***a* are built-up in the recessed regions **618***a*, preferably using a low temperature process to reduce LDD diffusion. The source and drain regions **620***a* may be formed by, for example, selective epitaxial growth (SEG), CVD, PECVD, PVD, PDL, ALD, spin-on formation, and/or other suitable techniques now know or later developed. The source and drain regions **620***a* may include materials such as amorphous silicon, polysilicon, strained silicon, germanium, silicon germanium, silicon carbide, and/or other materials.

[**0095**] In **6***f*, a photoresist **621***a* is formed over the device **601***a*. In device **601***b*, the spacer material **616***b* is removed and the hard mask **610***b* is also removed. These material layers may be removed using suitable etching processes as described above. The hard mask removal step is not performed in the same sequence in the method described above and shown in **FIGS. 4***f* and **5***f*. Further, deeper and/or more heavily doped source and drain regions for the device **601***b* are also formed using suitable processes as described above.

[**0096**] In step **6***g*, the photoresist **621***a* over the device **601***a* is removed, and a photoresist **621***b* is formed over the device **601***b*. The hard mask **610***a* over the gate electrode of device **601***a* is removed. Deeper and/or more heavily doped source and drain regions **628***a* are formed in the substrate **602** on either side of the gate structure of the device **601***a*. The formation of the source and drain regions **628***a* was not performed in the same sequence in the methods describe above and shown in **FIGS. 4***g* and **5***g*.

[**0097**] In **FIG. 6***h*, the photoresist **621***b* over the device **601***b* is removed. Further, spacers **615***a*, **615***b*, **616***a*, and **616***b* are removed from both devices. In addition, salicided contacts **632***a* and **632***b* are formed over the gate, source and drain structures of the devices **601***a* and **601***b*. The spacers may be removed by chemical etch, plasma etch, CMP, and/or other processing techniques. In one embodiment, the spacers may be removed by etchants such as hot phosphoric (H_2PO_4) acid, ammonium hydroxide (NH_4OH), hydrochloric acid (HCl), hydrofluoric acid (HF), sulfuric acid (H_2SO_4), and/or other chemicals.

[**0098**] In **FIG. 6***i*, an etch stop layer **630***a* and **630***b* are formed over the semiconductor devices **601***a* and **601***b*. The etch stop layer **630***a* and **630***b* may include silicon nitride (Si_xN_y), silicon dioxide (SiO_2), silicon oxy-nitride (SiON), and/or other materials. The etch stop layer **630***a* and **630***b* may include a stress level that may range between about +0.001 and about +50 GPa for tensile film and between about −0.001 and about −50 GPa for compressive film. The etch stop layer **630***a* and **630***b* may be formed by CVD, ALD, PECVD, PDL, spin-on coating, and/or other techniques, for example.

[**0099**] Referring to **FIG. 7**, illustrated is one embodiment of an integrated circuit device **700** constructed according to aspects of the present disclosure. The integrated circuit device **700** is one environment in which embodiments of the microelectronic device **300**, **400**, **500**, and **600** shown in **FIGS. 3***a-n*, **4***a-j*, **5***a*-**1**, **6***a-i* may be implemented. The microelectronic devices may form a logic circuit and/or other transistor array, including a one-, two- or three-dimensional array, and may be oriented in one or more rows and/or one or more columns, such as on or over a substrate.

[**0100**] The integrated circuit device **700** also includes interconnects **740** and **750** extending along and/or through one or more dielectric layers **730** to ones of the plurality of semiconductor devices **710**, **712**, **714**, **716**, **718**, and/or **720**. The dielectric layer **730** may include silicon dioxide, fluoride-doped silicate glass (FSG), Black Diamond® (a product of Applied Materials of Santa Clara, Calif.), Xerogel, Aerogel, amorphous fluorinated carbon, Parylene, BCB (bis-benzocyclobutenes), and SiLK™ (a product of Dow Chemical of Midland, Mich.), and/or other materials, and may be formed by CVD, PECVD, PDL, ALD, PVD, focused ion beam (FIB), Langmuir-Blodgett (LB) molecular assembly, spin-on coating and/or other processes. The interconnects **740** and **750** may include copper (Cu), tungsten (W), gold (Au), aluminum, carbon nano-tubes, carbon fullerenes, refractory metals, alloys of these materials and/or other materials, and may be formed by CVD, PECVD, ALD, PVD and/or other processes. The interconnects **740**, **750** may also include more than one layer. For example, each interconnect **740**, **750** may include an adhesion layer possibly comprising titanium (Ti), titanium nitride (TiN), tantalum (Ta) or tantalum nitride (TaN), silicon carbide (SiC), silicon oxy-carbide (SiOC), a barrier layer possibly comprising titanium nitride (TiN) and/or tantalum nitride (TaN), silicon carbide (SiC), silicon oxy-carbide (SiOC), and a bulk conductive layer comprising copper (Cu), tungsten (W), aluminum (Al), or aluminum alloy.

[**0101**] The foregoing has outlined features of several embodiments so that those skilled in the art may better understand the detailed description that follows. Those

skilled in the art should appreciate that they may readily use the present disclosure as a basis for designing or modifying other processes and structures for carrying out the same purposes and/or achieving the same advantages of the embodiments introduced herein. Those skilled in the art should also realize that such equivalent constructions do not depart from the spirit and scope of the present disclosure, and that they may make various changes, substitutions and alterations herein without departing from the spirit and scope of the present disclosure.

What is claimed is:

1. A method comprising:

forming a first semiconductor device in a substrate, the first semiconductor device comprises:

a gate structure;

a spacer disposed on sidewalls of the gate structure, the spacer having a first thickness;

raised source and drain regions disposed on either side of the gate structure;

forming a second semiconductor device in the substrate and electrically isolated from the first semiconductor device, the second semiconductor device comprises:

a gate structure;

a spacer disposed on sidewalls of the gate structure, the spacer having a second thickness less than the first thickness of the spacer of the first semiconductor device;

recessed source and drain regions disposed on either side of the gate structure.

2. The method of claim 1, wherein the first semiconductor device comprises a P-type metal oxide semiconductor (PMOS) device.

3. The method of claim 1, wherein the second semiconductor device comprises a N-type metal oxide semiconductor (NMOS) device.

4. The method of claim 1, wherein forming the gate structure of the first and second semiconductor device each comprises:

forming a gate dielectric layer over the substrate;

forming a gate electrode over the gate dielectric layer; and

forming a hard mask over the gate electrode.

5. The method of claim 4, wherein forming the first semiconductor device comprises:

forming a dummy spacer on either side of the gate structure;

etching a portion of the substrate on either side of the gate structure and extending below the dummy spacer and forming recesses on either side of the gate structure; and

filling in the recesses to a height extending above the substrate to form the raised source and drain regions.

6. The method of claim 4, wherein forming the first semiconductor device comprises:

forming an oxide layer over the gate structures of the first and second semiconductor devices;

forming a nitride layer over the oxide layer;

etching the oxide and nitride layers to form an offset spacer on either side of the gate structure;

forming a dummy spacer on either side of the gate structure over the offset spacer;

etching a portion of the substrate on either side of the gate structure and extending below the dummy spacer and forming recesses on either side of the gate structure; and

filling in the recesses to a height extending above the substrate to form the raised source and drain regions.

7. The method of claim 4, wherein forming the first semiconductor device comprises:

forming a liner oxide layer over the gate structures of the first and second semiconductor devices;

forming a nitride layer over the oxide layer;

forming an oxide layer over the nitride layer;

etching the oxide and nitride layers to form an offset spacer on either side of the gate structure;

forming a spacer on either side of the gate structure over the offset spacer;

etching a portion of the substrate on either side of the gate structure and extending below the dummy spacer and forming recesses on either side of the gate structure; and

filling in the recesses to a height extending above the substrate to form the raised source and drain regions.

8. The method of claim 4, wherein forming the first semiconductor device comprises:

forming a liner oxide layer over the gate structures of the first and second semiconductor devices;

forming a nitride layer over the oxide layer;

forming an oxide layer over the nitride layer;

etching the oxide and nitride layers to form an offset spacer on either side of the gate structure;

forming a dummy spacer on either side of the gate structure over the offset spacer;

etching a portion of the substrate on either side of the gate structure and extending below the dummy spacer and forming recesses on either side of the gate structure; and

filling in the recesses to a height extending above the substrate to form the raised source and drain regions.

9. The method of claim 5, further comprising in-situ doping of the raised source and drain regions as the recesses are being filled in.

10. The method of claim 5, wherein filling the recesses is performed at low temperature.

11. The method of claim 5, further comprising removing the dummy spacer after filling in the recesses.

12. The method of claim 5, further comprising removing the hard mask over the gate electrodes of the first and second semiconductor devices after filling in the recesses.

13. The method of claim 5, further comprising doping the raised source and drain regions.

14. The method of claim 5, wherein doping the raised source and drain regions comprises:

forming lightly doped drain regions; and

forming deeper more heavily doped regions.

15. The method of claim 1, wherein forming the second semiconductor device comprises:

forming a spacer on either side of the gate structure;

etching a portion of the substrate on either side of the gate structure defined by the spacer and forming recesses on either side of the gate structure and forming the recessed source and drain regions;

doping the recessed source and drain regions.

16. The method of claim 15, wherein doping the recessed source and drain regions comprises:

forming lightly doped drain regions; and

forming deeper more heavily doped regions.

17. The method of claim 1, wherein forming the first and second semiconductor devices comprises:

forming a first dielectric layer over the respective gate structures;

forming a second dielectric layer over the first dielectric layer; and

shaping the first and second dielectric layers into respective spacers for the first and second semiconductor devices.

18. The method of claim 17, further comprising forming a third dielectric layer prior to shaping the first and second dielectric layers.

19. The method of claim 1, further comprising forming a dummy spacer layer and shaping the dummy spacer layer into respective dummy spacers for the first and second semiconductor devices.

20. The method of claim 1, wherein the height of the gate structures of the first and second semiconductor devices are substantially similar.

21. The method of claim 1, wherein the height of the gate structures of the first and second semiconductor devices are substantially dis-similar.

22. A method comprising:

forming first and second gate structures of first and second semiconductor devices in a semiconductor substrate, the first and second gate structures being electrically isolated from one another, the first and second gate structures each having a hard mask;

forming a first spacer on either side of the first gate structure;

forming recesses on either side of the first gate structure;

filling in the recesses on either side of the first gate structure to form raised source and drain regions;

forming lightly doped drains on either side of the second gate structure;

forming lightly doped drains on either side of the first gate structure;

forming a spacer on either side of the first gate structure and the second gate structure over the liner oxide layer;

forming recesses on either side of the second gate structure in the substrate and outside of the spacer;

forming deeper and more heavily doped source and drain regions in the substrate on either side of the second gate structure;

forming deeper and more heavily doped source and drain regions in the substrate on either side of the first gate structure;

forming contacts over the gate, source and drain regions of the first and second semiconductor devices; and

forming an etch stop layer over the first and second semiconductor devices.

23. A method comprising:

forming first and second gate structures of first and second semiconductor devices in a semiconductor substrate, the first and second gate structures being electrically isolated from one another, the first and second gate structures each having a hard mask;

forming a spacer on either side of the first gate structure over the offset spacer;

forming recesses on either side of the first gate structure and partially extending under the dummy spacer;

filling in the recesses on either side of the first gate structure to form raised source and drain regions;

removing the hard masks;

forming a spacer on either side of the first gate structure and the second gate structure;

forming recesses on either side of the second gate structure in the substrate and outside of the spacer;

adding dopants to the substrate on either side of the second gate structure to form recessed source and drain doped regions; and

adding dopants to the substrate on either side of the first gate structure to form raised source and drain doped regions.

24. A method comprising:

forming first and second gate structures of first and second semiconductor devices in a semiconductor substrate, the first and second gate structures being electrically isolated from one another, the first and second gate structures each having a hard mask;

forming an offset spacer on either side of the first gate structure and on either side of the second gate structure;

forming a dummy spacer on either side of the first gate structure over the offset spacer;

forming recesses on either side of the first gate structure and partially extending under the dummy spacer;

filling in the recesses on either side of the first gate structure to form raised source and drain regions;

removing the dummy spacer and the hard masks;

forming lightly doped regions on either side of the second gate structure;

forming lightly doped regions on either side of the first gate structure;

forming a liner oxide layer over the first and second semiconductor devices;

forming a spacer on either side of the first gate structure and the second gate structure over the liner oxide layer;

forming recesses on either side of the second gate structure in the substrate and outside of the spacer;

forming deeper and more heavily doped source and drain regions in the substrate on either side of the second gate structure;

forming deeper and more heavily doped source and drain regions in the substrate on either side of the first gate structure;

forming contacts over the gate, source and drain regions of the first and second semiconductor devices; and

forming an etch stop layer over the first and second semiconductor devices.

25. A method comprising:

forming first and second gate structures of first and second semiconductor devices in a semiconductor substrate, the first and second gate structures being electrically isolated from one another, the first and second gate structures each having a hard mask;

forming lightly doped regions on either side of the first gate structure and on either side of the second gate structure;

forming a liner oxide layer over the first and second semiconductor devices;

forming a nitride layer over the liner oxide layer;

forming an oxide layer over the nitride layer;

etching the oxide and nitride layers to form an offset spacer on either side of the first gate structure;

forming a second oxide layer over the first and second semiconductor devices;

etching the second oxide layer to form a spacer on either side of the first gate structure over the offset spacer;

forming recesses on either side of the first gate structure and partially extending under the dummy spacer;

filling in the recesses on either side of the first gate structure to form raised source and drain regions;

etching the second oxide layer over the second semiconductor device and forming a spacer on either side of the second gate structure over the offset spacer thereof;

forming deeper and more heavily doped source and drain regions in the substrate on either side of the second gate structure;

removing the hard masks from the first and second gate structures; and

forming deeper and more heavily doped source and drain regions in the substrate on either side of the first gate structure.

26. A method comprising:

forming first and second gate structures of first and second semiconductor devices in a semiconductor substrate, the first and second gate structures being electrically isolated from one another, the first and second gate structures each having a hard mask and a pre-doped gate electrode;

forming lightly doped regions on either side of the first gate structure and on either side of the second gate structure;

forming an offset spacer on either side of the first gate structure;

forming an oxide layer over the first and second semiconductor devices;

etching the oxide layer to form a spacer on either side of the first gate structure over the offset spacer;

forming recesses on either side of the first gate structure and partially extending under the dummy spacer;

filling in the recesses on either side of the first gate structure to form raised source and drain regions;

forming doped regions in the raised source and drain regions in-situ;

etching the oxide layer over the second semiconductor device and forming a spacer on either side of the second gate structure over the offset spacer thereof;

forming deeper and more heavily doped source and drain regions in the substrate on either side of the second gate structure;

removing the hard masks from the first and second gate structures; and

forming deeper and more heavily doped source and drain regions in the substrate on either side of the first gate structure.

27. A method comprising:

forming first and second gate structures of first and second semiconductor devices in a semiconductor substrate, the first and second gate structures being electrically isolated from one another, the first and second gate structures each having a hard mask;

forming lightly doped regions on either side of the first gate structure and on either side of the second gate structure;

forming an offset spacer on either side of the first gate structure;

forming an oxide layer over the first and second semiconductor devices;

etching the oxide layer to form a dummy spacer on either side of the first gate structure over the offset spacer;

forming recesses on either side of the first gate structure and partially extending under the dummy spacer;

filling in the recesses on either side of the first gate structure to form raised source and drain regions;

etching the oxide layer over the second semiconductor device and forming a dummy spacer on either side of the second gate structure over the offset spacer thereof;

removing the hard mask from the second gate structure;

forming deeper and more heavily doped source and drain regions in the substrate on either side of the second gate structure;

removing the hard masks from the first gate structure;

forming deeper and more heavily doped source and drain regions in the substrate on either side of the first gate structure; and

removing the dummy spacers and the oxide layer over the first and second semiconductor devices.

28. A semiconductor circuit, comprising:

a first semiconductor device in a substrate, the first semiconductor device comprises:

a gate structure;

a spacer disposed on sidewalls of the gate structure, the spacer having a first thickness;

raised source and drain regions disposed on either side of the gate structure;

a second semiconductor device in the substrate and electrically isolated from the first semiconductor device, the second semiconductor device comprises:

a gate structure;

a spacer disposed on sidewalls of the gate structure, the spacer having a second thickness less than the first thickness of the spacer of the first semiconductor device;

recessed source and drain regions disposed on either side of the gate structure.

29. The semiconductor circuit of claim 28, wherein the gate structure of the first semiconductor device has a height greater than that of the gate structure of the second semiconductor device.

30. The semiconductor circuit of claim 28, wherein the raised source and drain regions comprises:

lightly doped drain regions; and

deeper more heavily doped regions.

31. The semiconductor circuit of claim 28, wherein the gate structures of the first and second semiconductor device each comprises:

a gate dielectric layer disposed over the substrate; and

a gate electrode disposed over the gate dielectric layer.

32. The semiconductor circuit of claim 28, wherein the spacer of the first and second semiconductor devices each comprises:

a shaped oxide layer over the gate structure;

a shaped nitride layer over the oxide layer;

33. The semiconductor circuit of claim 28, wherein the spacers of the first and second semiconductor devices are L-shaped.

34. The semiconductor circuit of claim 28, wherein the spacer of the first semiconductor device comprises:

a liner oxide layer;

a nitride layer over the liner oxide layer;

a first oxide layer over the nitride layer; and

a second oxide layer over the first oxide layer.

35. The semiconductor circuit of claim 28, wherein the spacer of the second semiconductor device comprises:

a liner oxide layer;

a nitride layer over the liner oxide layer; and

an oxide layer over the nitride layer.

36. The semiconductor circuit of claim 28, wherein the spacer of the first and second semiconductor device comprises:

a liner oxide layer; and

a nitride layer over the liner oxide layer.

37. A semiconductor circuit, comprising:

a first semiconductor device in a substrate, the first semiconductor device comprises:

a gate structure;

a spacer disposed on sidewalls of the gate structure, the spacer having a first thickness;

raised source and drain regions disposed on either side of the gate structure;

a second semiconductor device in the substrate and electrically isolated from the first semiconductor device, the second semiconductor device comprises:

a gate structure;

a spacer disposed on sidewalls of the gate structure, the spacer having a second thickness substantially equal to the first thickness of the spacer of the first semiconductor device;

recessed source and drain regions disposed on either side of the gate structure.

38. The semiconductor circuit of claim 34, wherein the gate structure of the first semiconductor device has a height greater than that of the gate structure of the second semiconductor device.

39. The semiconductor circuit of claim 34, wherein the raised source and drain regions comprises:

lightly doped drain regions; and

deeper more heavily doped regions.

40. The semiconductor circuit of claim 34, wherein the gate structures of the first and second semiconductor device each comprises:

a gate dielectric layer disposed over the substrate; and

a gate electrode disposed over the gate dielectric layer.

41. The semiconductor circuit of claim 34, wherein the spacer of the first and second semiconductor devices each comprises:

a shaped oxide layer over the gate structure;

a shaped nitride layer over the oxide layer;

42. The semiconductor circuit of claim 34, wherein the spacers of the first and second semiconductor devices are L-shaped.

* * * * *