US005809415A

United States Patent [19]

Rossmann

[11] **Patent Number: 5,809,415**

[45] **Date of Patent: Sep. 15, 1998**

[54] **METHOD AND ARCHITECTURE FOR AN INTERACTIVE TWO-WAY DATA COMMUNICATION NETWORK**

[75] Inventor: **Alain Rossmann**, Menlo Park, Calif.

[73] Assignee: **Unwired Planet, Inc.**, Redwood Shores, Calif.

[21] Appl. No.: **570,210**

[22] Filed: **Dec. 11, 1995**

[51] **Int. Cl.**[6] **H04Q 7/20**

[52] **U.S. Cl.** **455/422**; 455/426; 455/31.3; 455/31.2; 370/352; 370/383; 379/67; 379/89

[58] **Field of Search** ..... 370/352, 383, 370/389, 390, 392, 401; 379/67, 89, 93.07, 93.08, 93.25, 100, 100.11, 114, 201, 207; 455/422, 414, 552, 426, 466, 31.2, 31.3, 550, 557, 575, 556, 564, 566; 364/514 R

[56] **References Cited**

U.S. PATENT DOCUMENTS

5,491,745	2/1996	Roeder	455/422
5,581,595	12/1996	Iwashita et al.	455/566
5,608,786	3/1997	Gordon	379/100
5,623,605	4/1997	Keshav et al.	370/392
5,675,507	10/1997	Bobo, II	364/514 R

Primary Examiner—Dwayne Bost
Assistant Examiner—Keith Ferguson
Attorney, Agent, or Firm—Skjerven, Morrill, MacPherson, Franklin, & Friel LLP; Forrest E. Gunnison

[57] **ABSTRACT**

A two-way data communication device such as a data ready cellular telephone, a two-way pager, or a telephone communicates via a two-way data communication network with a server computer on a computer network that has an interface to the two-way data communication network, i.e, is coupled to the two-way data communication network. For example, the computer network can be a corporate wide area network, a corporate local area network, the Internet, or any combination of computer networks. The two-way data communication device utilizes a client module to transmit message including a resource selector chosen by the user to a server on a server computer on the computer network. The server processes the message and transmits a response over the two-way data communication network to the client module. The client module interprets the response and presents the response to the user via a structured user interface. Alternatively, the user transmits a request that directs the server to transmit the response to the request to another location or to another user.

54 Claims, 36 Drawing Sheets

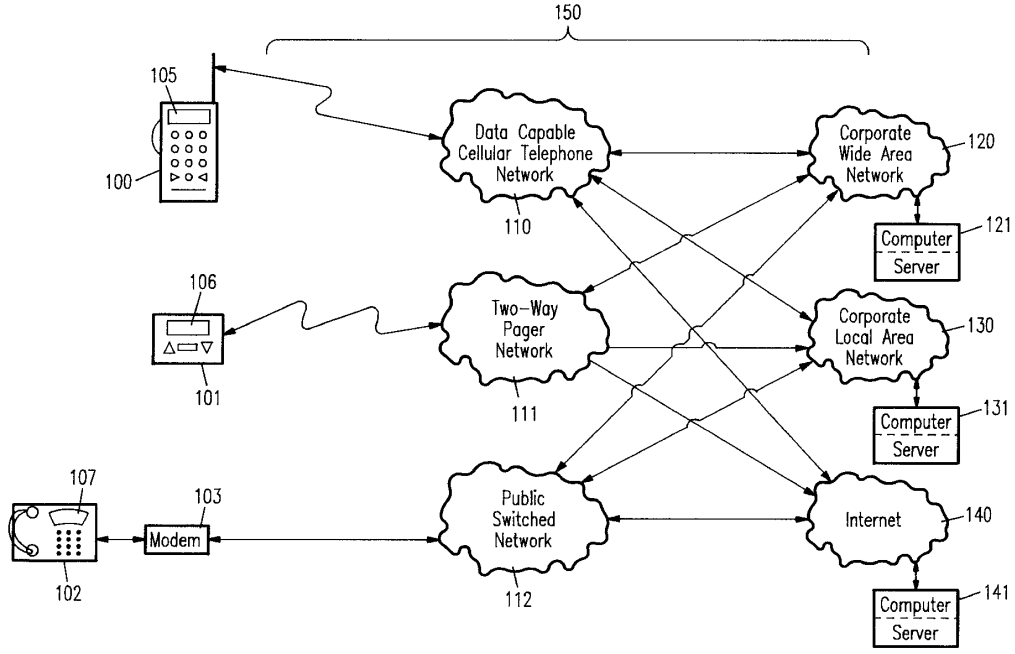

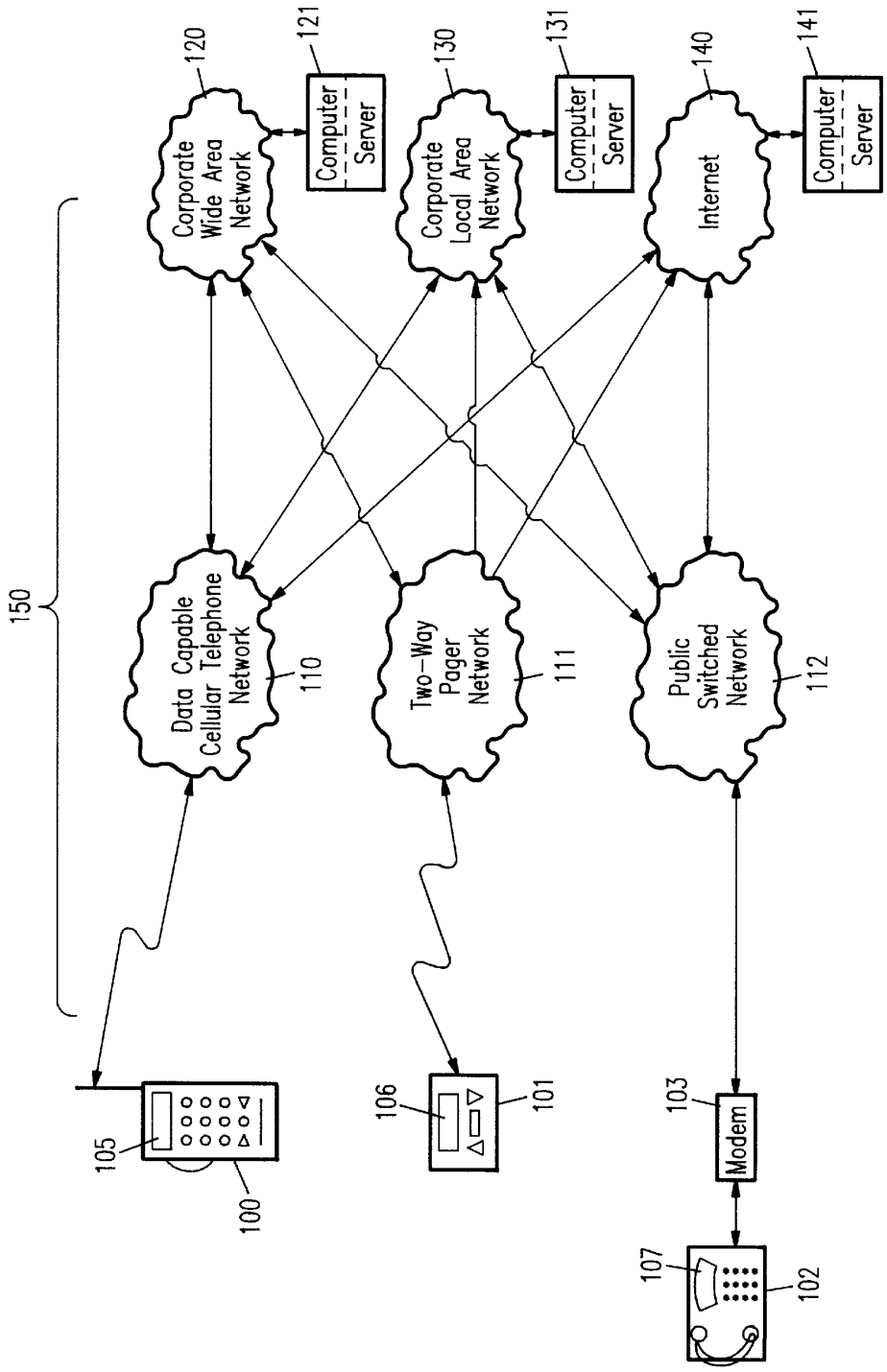
150
Corporate Wide Area Network
120
Computer Server
121
Corporate Local Area Network
130
Computer Server
131
Internet
140
Computer Server
141
Data Capable Cellular Telephone Network
110
Two-Way Pager Network
111
Public Switched Network
112
105
100
106
101
103
Modem
107
102

FIG. 1

FIG. 2A

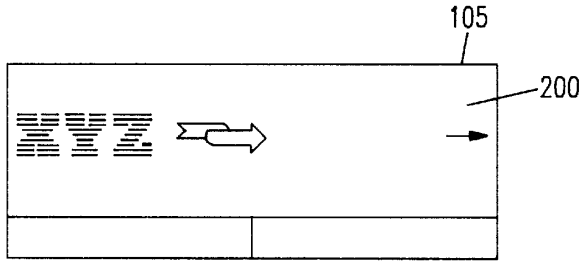

FIG. 2B

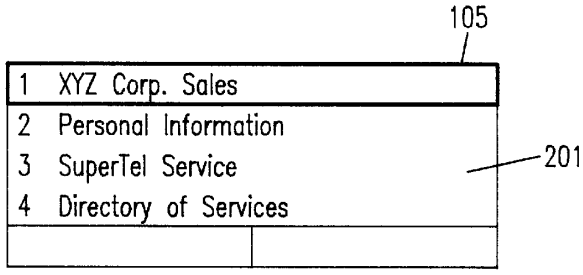

FIG. 2C

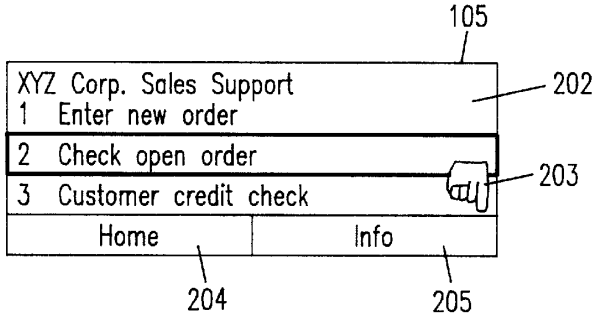

FIG. 2D

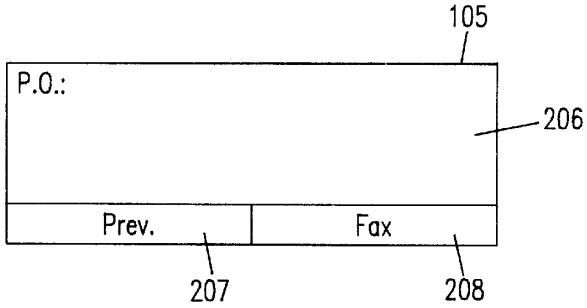

FIG. 2E

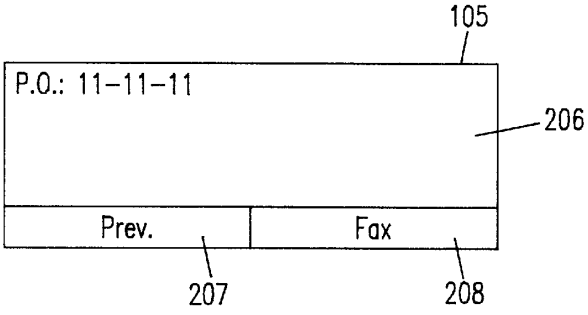

FIG. 2F

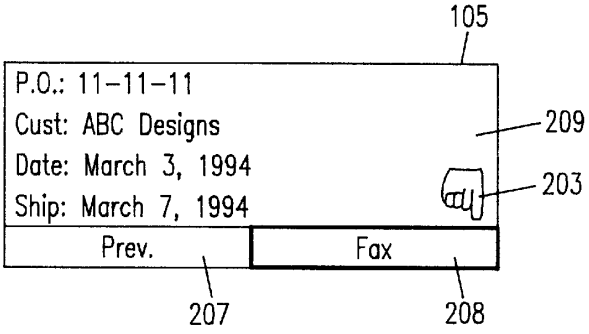

FIG. 2G

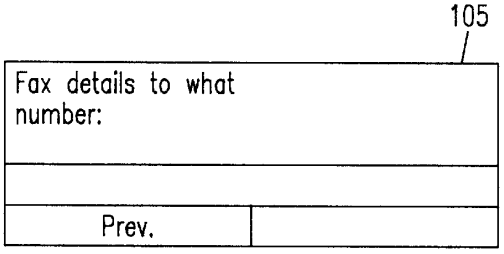

FIG. 2H

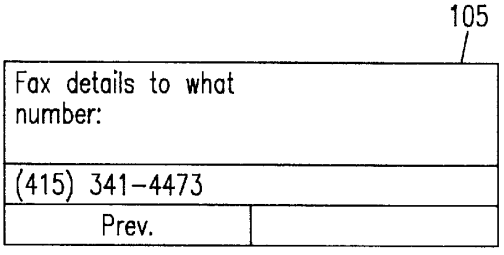

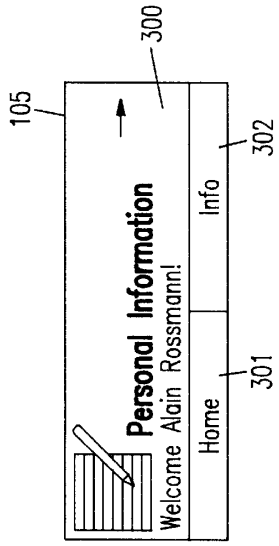

FIG. 3A

FIG. 3B

FIG. 3C

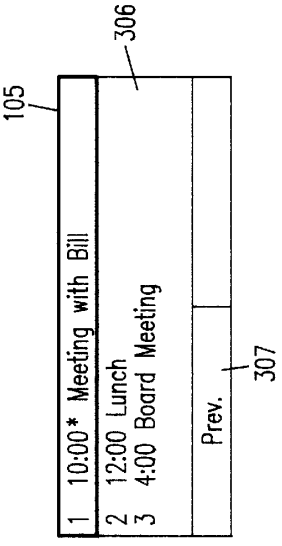

FIG. 3D

FIG. 3E

FIG. 3F

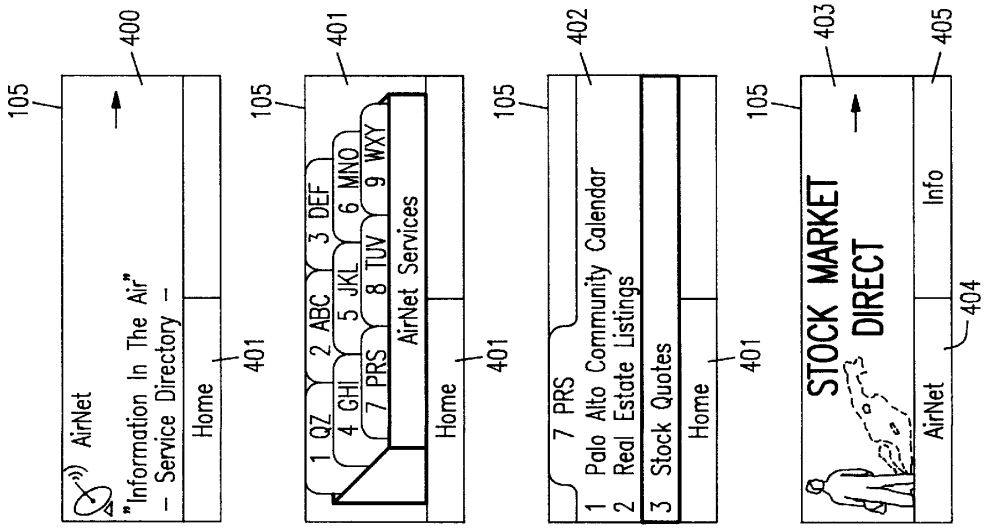

FIG. 4A

FIG. 4B

FIG. 4C

FIG. 4D

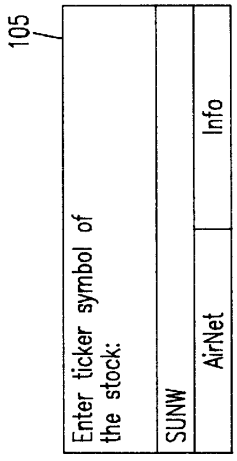

FIG. 4E

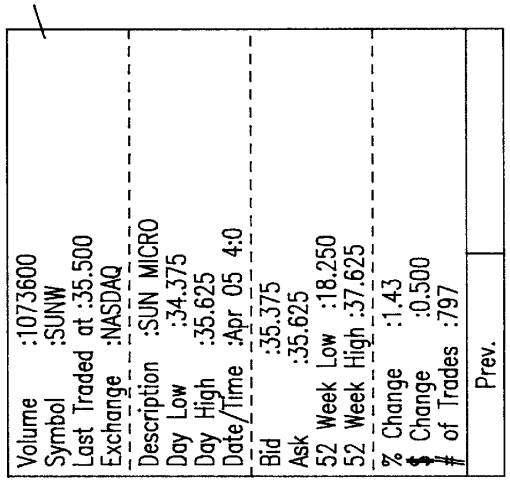

FIG. 4F

FIG. 4G

FIG. 4H

FIG. 4I

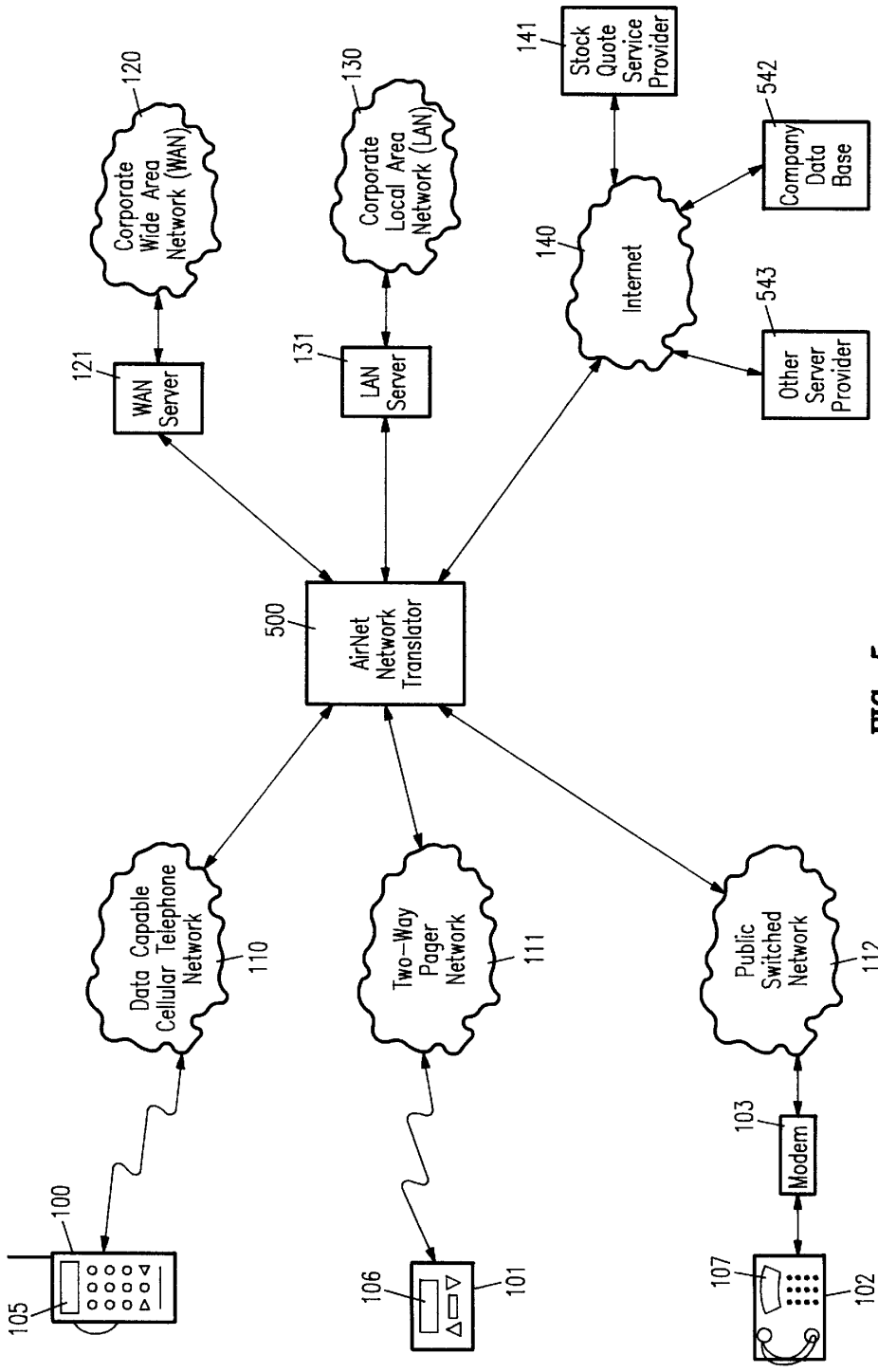
Corporate Wide Area Network (WAN)
120
WAN Server
121
Corporate Local Area Network (LAN)
130
LAN Server
131
Stock Quote Service Provider
141
Internet
140
Company Data Base
542
Other Server Provider
543
AirNet Network Translator
500
Data Capable Cellular Telephone Network
110
Two-Way Pager Network
111
Public Switched Network
112
Modem
103
100
105
106
101
107
102

FIG. 5

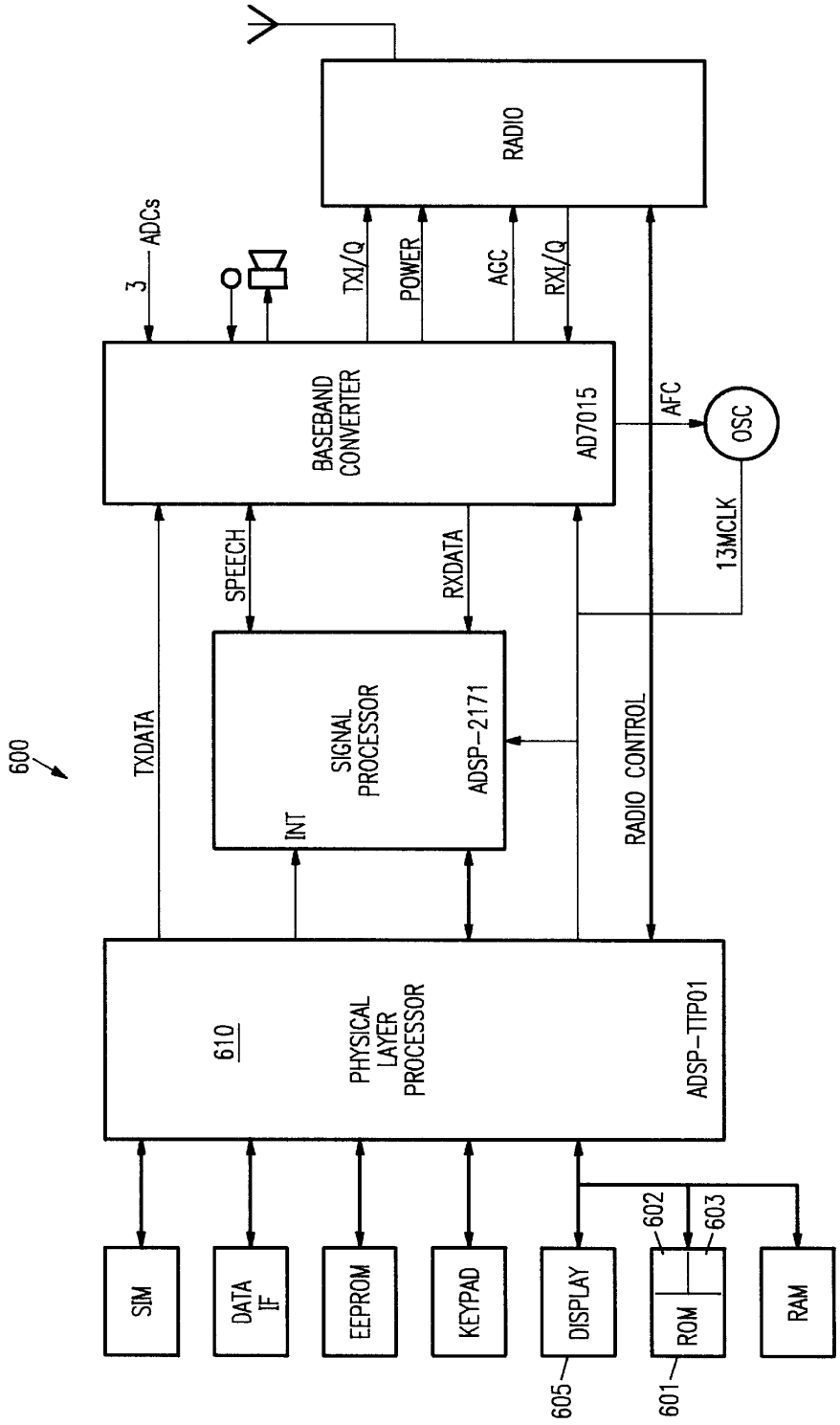
600
RADIO
3 ADCs
TXI/Q
POWER
AGC
RXI/Q
BASEBAND CONVERTER
AD7015
AFC
OSC
13MCLK
SPEECH
RXDATA
TXDATA
SIGNAL PROCESSOR
ADSP-2171
INT
RADIO CONTROL
610
PHYSICAL LAYER PROCESSOR
ADSP-TTP01
SIM
DATA IF
EEPROM
KEYPAD
DISPLAY
ROM
RAM
602
603
605
601

FIG. 6

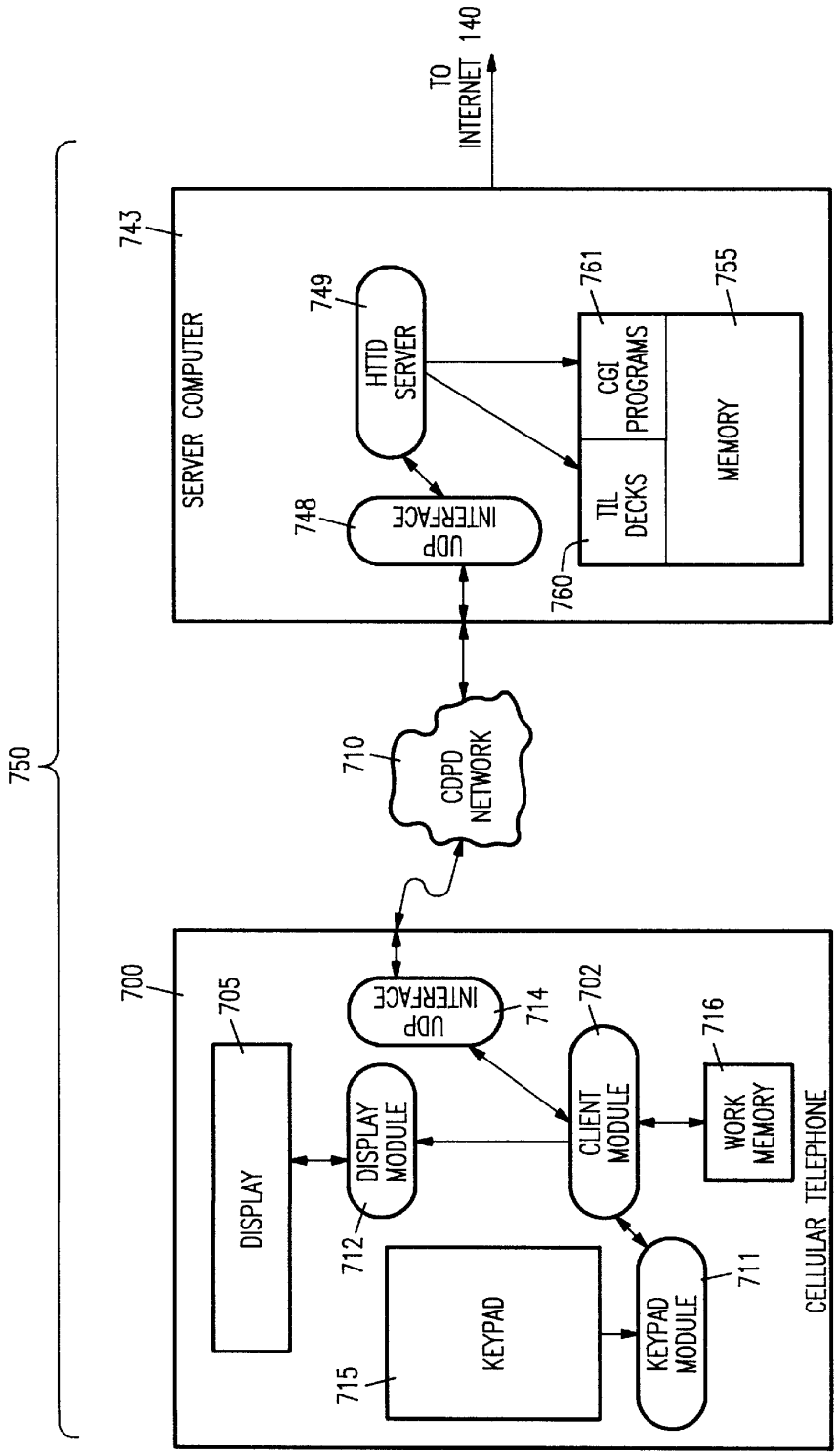
750
700
705
DISPLAY
712
DISPLAY MODULE
715
KEYPAD
UDP INTERFACE
714
CLIENT MODULE
702
KEYPAD MODULE
711
WORK MEMORY
716
CELLULAR TELEPHONE
710
CDPD NETWORK
743
SERVER COMPUTER
749
HTTD SERVER
748
UDP INTERFACE
761
CGI PROGRAMS
TIL DECKS
760
755
MEMORY
TO INTERNET 140

FIG. 7

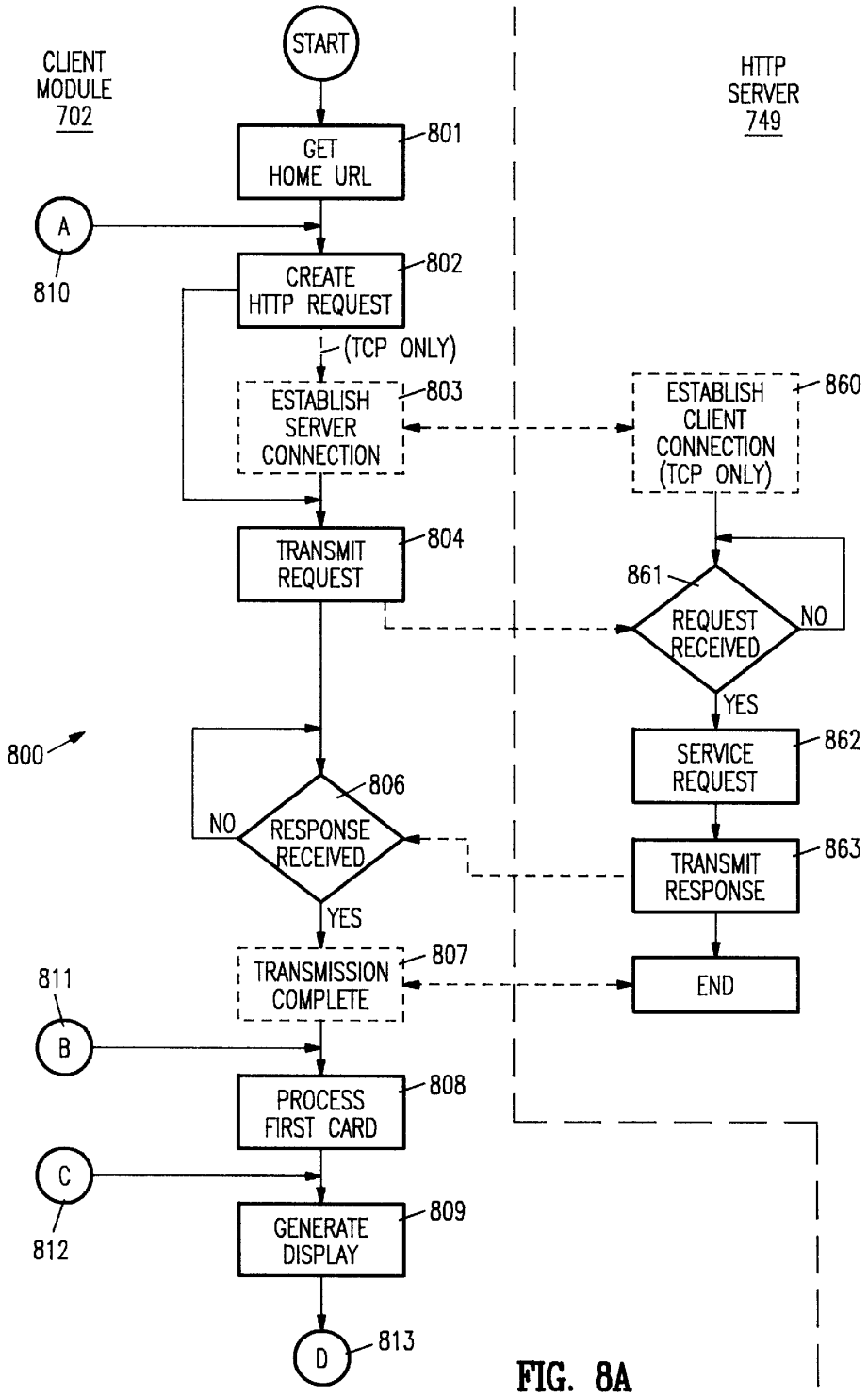
START
CLIENT MODULE 702
HTTP SERVER 749
GET HOME URL
801
A
810
CREATE HTTP REQUEST
802
(TCP ONLY)
ESTABLISH SERVER CONNECTION
803
ESTABLISH CLIENT CONNECTION (TCP ONLY)
860
TRANSMIT REQUEST
804
861
REQUEST RECEIVED
NO
YES
800
SERVICE REQUEST
862
806
NO
RESPONSE RECEIVED
TRANSMIT RESPONSE
863
YES
TRANSMISSION COMPLETE
807
END
811
B
PROCESS FIRST CARD
808
C
812
GENERATE DISPLAY
809
D
813

FIG. 8A

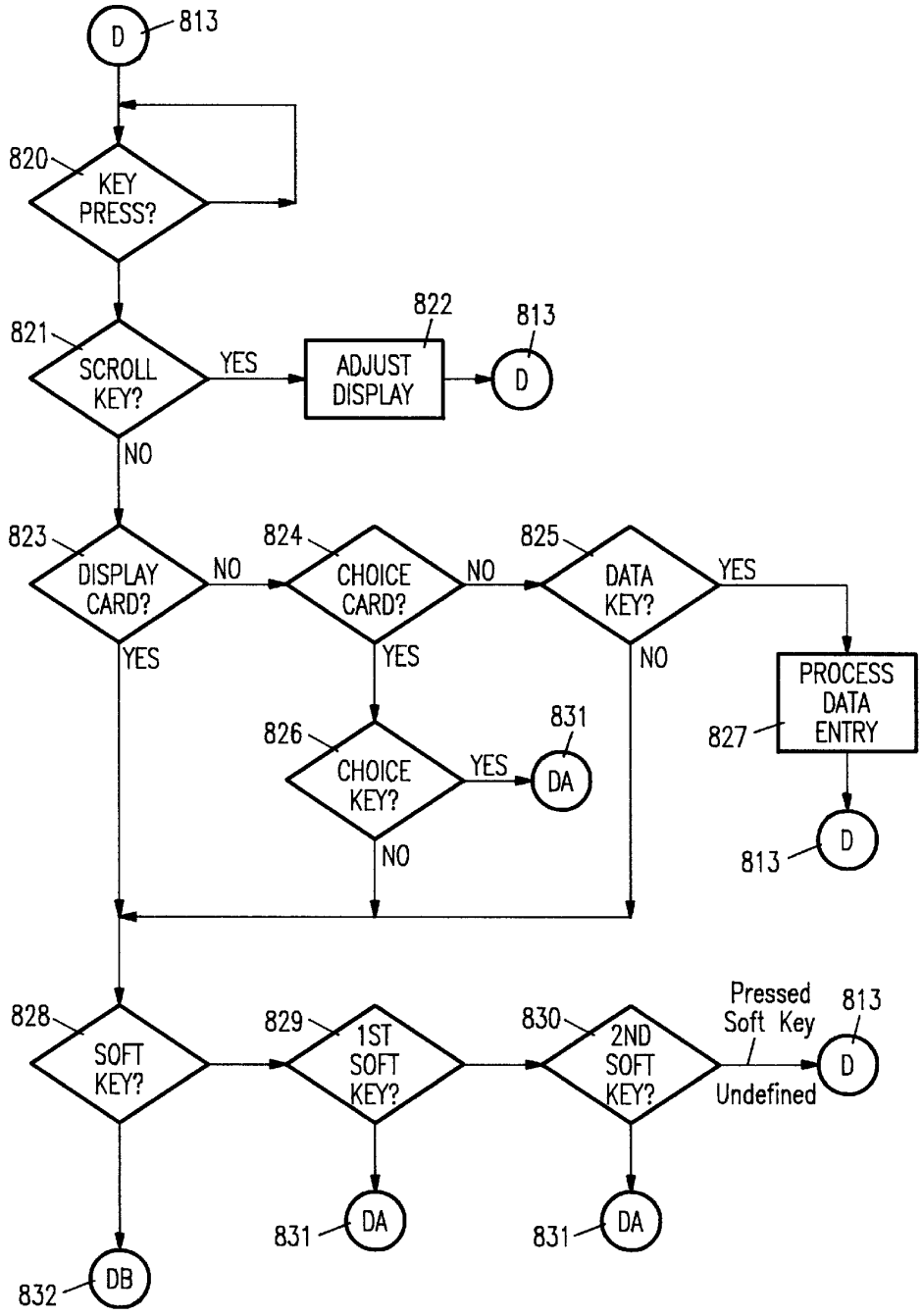
D
813
820
KEY PRESS?
821
SCROLL KEY?
YES
822
ADJUST DISPLAY
813
D
NO
823
DISPLAY CARD?
NO
824
CHOICE CARD?
NO
825
DATA KEY?
YES
YES
YES
NO
826
CHOICE KEY?
YES
831
DA
NO
PROCESS DATA ENTRY
827
813
D
828
SOFT KEY?
829
1ST SOFT KEY?
830
2ND SOFT KEY?
Pressed Soft Key
813
D
Undefined
831
DA
831
DA
832
DB

FIG. 8B

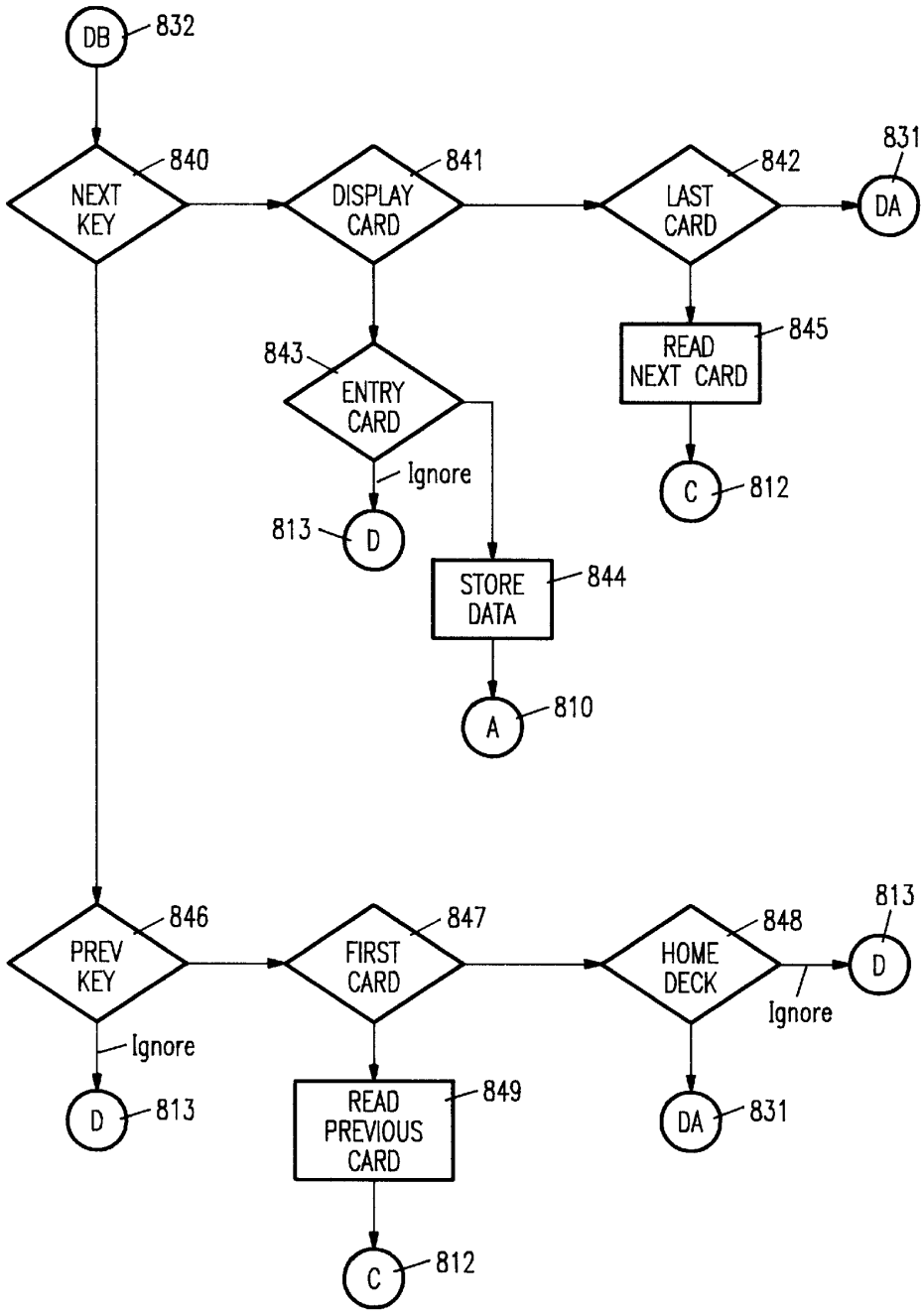
DB
832
NEXT KEY
840
DISPLAY CARD
841
LAST CARD
842
DA
831
READ NEXT CARD
845
C
812
ENTRY CARD
843
Ignore
D
813
STORE DATA
844
A
810
PREV KEY
846
Ignore
D
813
FIRST CARD
847
READ PREVIOUS CARD
849
C
812
HOME DECK
848
Ignore
D
813
DA
831

FIG. 8C

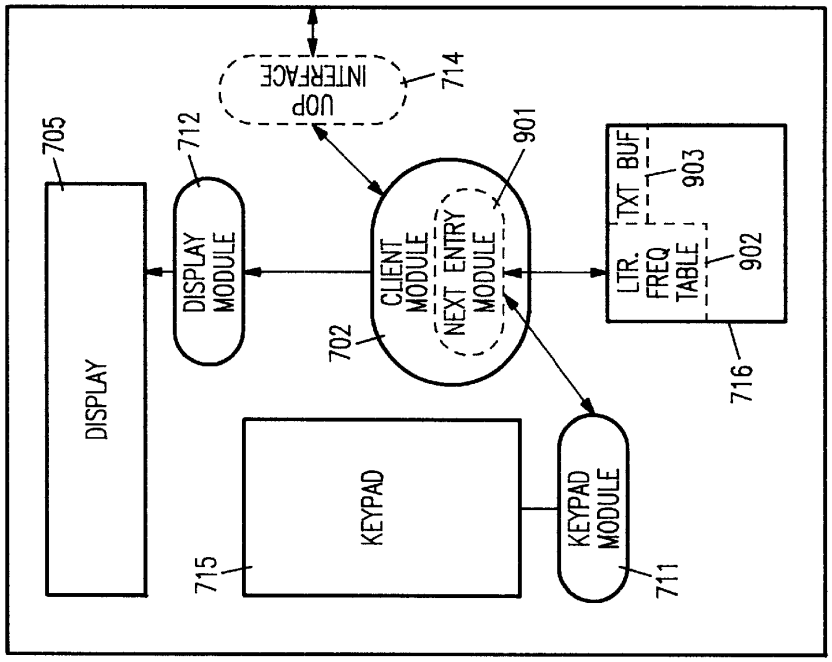
DISPLAY
705
DISPLAY MODULE
712
UOP INTERFACE
714
CLIENT MODULE
NEXT ENTRY MODULE
702
901
LTR. FREQ TABLE
TXT BUF
903
902
716
KEYPAD
715
KEYPAD MODULE
711

FIG. 9

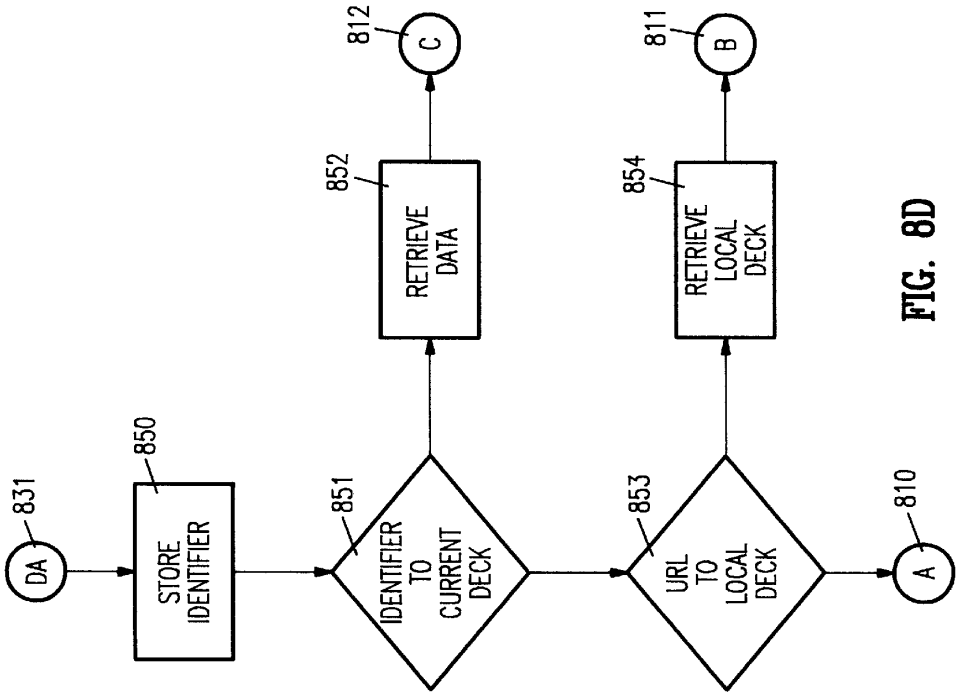
DA
831
STORE IDENTIFIER
850
IDENTIFIER TO CURRENT DECK
851
RETRIEVE DATA
852
C
812
URL TO LOCAL DECK
853
RETRIEVE LOCAL DECK
854
B
811
A
810

FIG. 8D

"-	-"	1	2	3	4	5	6	7	8	9
"a	a"	q	a	d	g	j	m	r	t	w
"a	b"	q	a	e	i	l	o	r	u	w
"a	c"	q	c	e	h	k	m	r	t	w
"a	d"	q	a	d	i	j	m	s	v	y
"a	e"	q	a	d	g	j	m	p	t	w
"a	f"	q	a	f	g	j	m	r	t	w
"a	g"	q	a	e	i	j	o	r	t	w
"a	h"	q	a	e	g	j	m	p	u	w
"a	i"	q	c	d	g	l	n	r	t	w
"a	j"	q	a	d	g	j	o	p	t	w
"a	k"	q	a	e	i	j	m	s	t	w
"a	l"	q	a	e	i	l	o	s	t	w
"a	m"	q	a	e	i	l	o	p	u	w
"a	n"	q	c	d	g	k	n	s	t	y
"a	o"	q	a	d	g	j	m	p	t	w
"a	p"	q	a	e	h	l	o	p	t	w
"a	q"	q	a	d	g	j	m	s	t	w
"a	r"	q	c	e	g	k	o	r	t	y
"a	s"	q	c	e	i	k	o	s	t	y
"a	t"	q	a	e	i	l	o	s	t	w
"a	u"	q	c	d	g	l	m	s	t	w
"a	v"	q	a	e	i	j	o	p	t	w
"a	w"	q	a	d	g	k	m	p	t	w
"a	x"	q	a	e	i	l	m	s	t	w
"a	y"	q	b	e	i	j	m	s	t	w
"a	z"	q	a	d	i	j	m	p	t	w
"a	"	q	a	d	g	j	m	p	t	w
"b	a"	q	c	d	g	k	n	s	t	y
"b	b"	q	a	d	i	j	m	s	t	y
"b	c"	q	a	d	g	j	o	r	t	w
"b	d"	q	a	d	g	j	m	s	t	w
"b	e"	q	c	e	g	l	n	s	t	x
"b	f"	q	a	d	g	j	m	p	t	w
"b	g"	q	a	d	g	j	m	p	t	w
"b	h"	q	a	d	g	j	m	p	t	w
"b	i"	q	c	d	g	l	n	s	t	w
"b	j"	q	a	e	g	j	m	p	t	w

FIG. 10A

"-	-"	1	2	3	4	5	6	7	8	9
"b	k"	q	a	d	g	j	m	p	t	w
"b	l"	q	a	e	i	j	o	p	t	y
"b	m"	q	a	d	g	j	m	r	t	w
"b	n"	q	a	d	g	j	m	p	t	w
"b	o"	q	a	d	i	j	o	s	u	x
"b	p"	q	a	d	g	j	m	s	t	w
"b	q"	q	a	d	g	j	m	p	t	w
"b	r"	q	a	e	i	j	o	p	u	w
"b	s"	q	c	d	i	j	o	s	t	w
"b	t"	q	a	d	g	j	m	p	t	w
"b	u"	q	a	d	i	l	m	s	t	y
"b	v"	q	a	d	i	j	m	p	t	w
"b	w"	q	a	e	g	j	m	p	t	w
"b	x"	q	a	d	g	j	m	p	t	w
"b	y"	q	a	d	g	j	m	p	t	w
"b	z"	q	a	d	g	j	m	p	t	w
"b	"	q	a	d	g	j	m	p	t	w
"c	a"	q	b	d	g	l	n	r	t	w
"c	b"	q	a	e	g	j	m	p	t	w
"c	c"	q	a	e	i	j	o	s	t	w
"c	d"	q	a	d	g	j	m	p	t	w
"c	e"	q	a	d	i	l	n	s	t	w
"c	f"	q	a	d	i	j	m	p	t	w
"c	g"	q	a	d	i	j	m	p	t	w
"c	h"	q	a	e	i	j	o	r	t	w
"c	i"	q	a	f	i	l	n	p	t	w
"c	j"	q	a	d	g	j	m	p	t	w
"c	k"	q	b	e	i	l	m	s	t	y
"c	l"	q	a	e	i	j	o	r	u	w
"c	m"	q	c	d	g	j	m	p	t	w
"c	n"	q	a	d	g	j	m	p	t	w
"c	o"	q	a	d	g	l	m	r	u	w
"c	p"	q	a	d	g	j	m	p	t	w
"c	q"	q	a	d	g	j	m	p	t	w
"c	r"	q	a	e	i	j	o	p	u	y
"c	s"	q	a	d	i	l	o	s	t	w
"c	t"	q	a	e	i	l	o	r	u	w

FIG. 10B

"-	-"	1	2	3	4	5	6	7	8	9
"c	u"	q	b	e	i	l	m	s	t	w
"c	v"	q	a	d	g	j	m	p	t	w
"c	w"	q	a	d	g	j	m	p	t	w
"c	x"	q	a	d	g	j	m	p	t	w
"c	y"	q	c	d	g	j	m	p	t	w
"c	z"	q	a	d	g	j	n	p	t	w
"c	"	q	a	d	g	j	m	p	t	w
"d	a"	q	b	d	g	j	n	r	t	y
"d	b"	q	a	d	g	j	m	p	t	w
"d	c"	q	a	d	g	j	m	p	t	w
"d	d"	q	a	e	i	l	m	r	t	w
"d	e"	q	a	d	g	l	m	r	v	x
"d	f"	q	a	d	i	j	m	p	t	w
"d	g"	q	a	e	g	j	m	p	t	w
"d	h"	q	a	e	g	j	m	p	t	w
"d	i"	z	a	f	g	l	n	s	t	w
"d	j"	q	a	d	g	j	m	p	t	w
"d	k"	q	a	d	g	j	m	p	t	w
"d	l"	q	a	e	i	j	m	p	t	y
"d	m"	q	a	d	i	j	m	s	t	w
"d	n"	q	a	e	g	j	m	p	t	w
"d	o"	q	c	e	i	j	n	p	t	w
"d	p"	q	a	d	g	j	m	p	t	w
"d	q"	q	a	d	g	j	m	p	u	w
"d	r"	q	a	e	i	j	o	p	t	w
"d	s"	q	a	e	i	j	m	p	t	w
"d	t"	q	a	d	g	j	m	r	t	w
"d	u"	q	c	e	g	l	m	r	t	w
"d	v"	q	a	d	i	j	m	p	t	w
"d	w"	q	a	d	i	j	o	p	t	w
"d	x"	q	a	d	g	j	m	p	t	w
"d	y"	q	a	d	g	j	m	p	t	w
"d	z"	q	a	d	g	j	m	p	t	w
"d	"	q	a	d	g	j	m	p	t	w
"e	a"	q	c	d	g	l	n	s	t	w
"e	b"	q	c	f	g	j	m	r	t	y
"e	c"	q	a	e	h	k	o	s	t	w

FIG. 10C

"-	-"	1	2	3	4	5	6	7	8	9
"e	d"	q	b	e	i	l	n	s	u	w
"e	e"	z	a	d	i	k	n	r	t	w
"e	f"	q	a	e	i	l	o	r	t	w
"e	g"	q	a	d	i	j	o	r	u	y
"e	h"	q	a	e	i	j	m	p	t	w
"e	i"	q	a	d	g	j	n	r	v	w
"e	j"	q	a	e	g	j	m	p	t	w
"e	k"	q	a	e	i	j	m	s	t	w
"e	l"	q	a	e	i	l	o	p	v	y
"e	m"	q	a	e	i	j	o	s	u	w
"e	n"	q	c	d	g	l	o	s	t	w
"e	o"	q	a	f	g	j	n	p	u	w
"e	p"	q	a	e	h	l	o	r	t	w
"e	q"	q	a	d	g	j	m	p	u	w
"e	r"	q	a	e	i	l	n	s	v	y
"e	s"	q	c	e	i	k	n	s	t	w
"e	t"	z	c	e	i	j	m	s	t	w
"e	u"	q	a	d	g	j	m	r	t	w
"e	v"	q	a	e	i	j	o	p	t	w
"e	w"	q	a	e	h	j	o	s	t	w
"e	x"	q	a	e	i	j	m	p	t	w
"e	y"	q	a	d	g	j	o	s	t	w
"e	z"	q	a	e	g	j	m	p	t	w
"e	"	q	a	d	g	j	m	p	t	w
"f	a"	q	c	d	i	k	m	s	v	x
"f	b"	q	a	d	g	j	m	p	t	w
"f	c"	q	c	d	g	j	m	p	t	w
"f	d"	q	a	d	g	j	m	p	t	w
"f	e"	q	a	e	g	l	m	r	t	w
"f	f"	q	a	e	i	j	o	s	t	w
"f	g"	q	a	d	g	j	m	p	t	w
"f	h"	q	a	d	g	j	m	p	t	w
"f	i"	q	c	e	g	l	n	r	t	x
"f	j"	q	a	d	g	j	m	p	t	w
"f	k"	q	a	d	g	j	m	p	t	w
"f	l"	q	a	e	i	j	o	p	t	y
"f	m"	q	a	d	g	j	m	p	t	w

FIG. 10D

"-	-"	1	2	3	4	5	6	7	8	9
"f	n"	q	a	d	g	j	m	p	t	w
"f	o"	q	c	d	g	l	n	r	u	w
"f	p"	q	a	d	g	j	m	p	t	w
"f	q"	q	a	d	g	j	m	p	t	w
"f	r"	q	a	e	i	j	o	p	t	y
"f	s"	q	a	d	g	j	m	p	t	w
"f	t"	q	a	e	g	k	m	p	t	w
"f	u"	q	a	d	g	l	n	r	t	w
"f	v"	q	a	d	g	j	m	p	t	w
"f	w"	q	a	d	g	j	m	p	t	w
"f	x"	q	a	d	g	j	m	p	t	w
"f	y"	q	a	d	i	j	m	p	t	w
"f	z"	q	a	d	g	j	m	p	t	w
"f	"	q	a	d	g	j	m	p	t	w
"g	a"	z	a	d	i	l	n	r	t	w
"g	b"	q	a	d	g	j	m	p	t	w
"g	c"	q	a	d	g	j	m	s	t	w
"g	d"	q	a	d	g	j	o	p	t	w
"g	e"	q	a	d	g	l	n	s	t	w
"g	f"	q	a	d	g	j	m	p	u	w
"g	g"	q	a	e	g	l	m	p	t	w
"g	h"	q	a	e	g	j	o	p	t	w
"g	i"	q	c	f	g	j	n	s	v	w
"g	j"	q	a	d	g	j	m	p	t	w
"g	k"	q	a	d	g	j	m	p	t	w
"g	l"	q	a	e	i	j	o	p	t	y
"g	m"	q	a	d	g	l	m	s	t	w
"g	n"	q	a	e	i	j	o	p	t	w
"g	o"	q	a	e	i	j	o	p	t	w
"g	p"	q	a	d	g	j	m	p	t	w
"g	q"	q	a	d	g	j	m	p	t	w
"g	r"	q	a	e	g	j	o	p	t	w
"g	s"	q	a	d	g	j	m	p	t	w
"g	t"	q	a	e	h	j	o	p	t	w
"g	u"	q	a	e	i	l	m	r	t	y
"g	v"	q	a	d	g	j	m	p	t	w
"g	w"	q	a	d	g	j	m	p	t	w

FIG. 10E

"-	-"	1	2	3	4	5	6	7	8	9
"g	x"	q	a	d	g	j	m	p	t	w
"g	y"	q	a	d	g	j	m	p	t	w
"g	z"	q	a	d	g	j	m	p	t	w
"g	"	q	a	d	g	j	m	p	t	w
"h	a"	q	b	d	i	l	n	s	t	w
"h	b"	q	a	d	g	j	m	p	t	w
"h	c"	q	a	d	g	j	o	p	t	w
"h	d"	q	a	d	g	j	m	r	t	w
"h	e"	q	c	d	i	l	n	r	t	y
"h	f"	q	a	d	g	j	m	p	t	w
"h	g"	q	a	d	g	j	m	p	t	w
"h	h"	q	a	d	g	j	m	p	t	w
"h	i"	q	c	e	g	l	n	s	t	w
"h	j"	q	a	d	g	j	m	p	t	w
"h	k"	q	a	d	g	j	m	p	t	w
"h	l"	q	a	d	g	j	m	p	t	y
"h	m"	q	a	e	g	j	m	p	t	w
"h	n"	q	a	d	i	j	o	p	t	w
"h	o"	q	b	d	i	l	n	r	u	w
"h	p"	q	a	d	g	j	m	p	u	w
"h	q"	q	a	d	g	j	m	p	t	w
"h	r"	q	a	e	i	j	o	p	t	w
"h	s"	q	a	d	g	j	m	p	t	w
"h	t"	q	a	d	g	l	m	s	t	w
"h	u"	q	a	d	g	l	m	r	t	w
"h	v"	q	a	d	g	j	m	p	t	w
"h	w"	q	a	d	g	j	m	p	t	w
"h	x"	q	a	d	g	j	m	p	t	w
"h	y"	q	a	d	g	j	m	p	t	w
"h	z"	q	a	d	g	j	m	p	t	w
"h	"	q	a	d	g	j	m	p	t	w
"i	a"	q	b	d	g	l	n	r	t	w
"i	b"	q	a	e	i	l	m	r	u	w
"i	c"	q	a	e	h	k	o	r	t	y
"i	d"	q	a	e	i	l	n	p	u	w
"i	e"	q	c	d	g	l	n	r	v	w
"i	f"	q	a	f	i	j	o	p	t	y

FIG. 10F

"-	-"	1	2	3	4	5	6	7	8	9
"i	g"	q	a	e	h	j	n	r	u	w
"i	h"	q	a	d	g	j	m	p	t	w
"i	i"	q	a	d	g	j	m	p	t	w
"i	j"	q	a	d	g	j	o	p	t	w
"i	k"	q	a	e	g	k	m	p	t	w
"i	l"	q	a	e	i	l	o	s	t	y
"i	m"	q	a	e	i	j	m	p	u	w
"i	n"	q	c	e	g	k	n	s	t	w
"i	o"	q	a	d	g	l	n	r	u	w
"i	p"	q	a	d	i	l	m	s	t	w
"i	q"	q	a	d	g	j	m	p	u	w
"i	r"	q	c	e	i	l	n	s	t	w
"i	s"	q	c	e	h	k	n	s	t	w
"i	t"	q	a	e	h	l	o	s	t	y
"i	u"	q	a	d	g	j	m	p	t	w
"i	v"	q	a	e	i	j	m	p	t	w
"i	w"	q	a	d	g	j	m	p	t	w
"i	x"	q	a	e	g	j	m	p	t	w
"i	y"	q	a	d	g	j	m	p	t	w
"i	z"	q	a	e	i	j	o	p	t	w
"i	"	q	a	d	g	j	m	p	t	w
"j	a"	q	c	d	g	j	n	p	t	w
"j	b"	q	a	d	g	j	m	p	t	w
"j	c"	q	a	d	g	j	m	p	t	w
"j	d"	q	a	d	g	j	m	p	t	w
"j	e"	q	c	d	g	j	m	r	t	w
"j	f"	q	a	d	g	j	m	p	t	w
"j	g"	q	a	d	g	j	m	p	t	w
"j	h"	q	a	d	g	j	m	p	t	w
"j	i"	q	a	d	g	j	m	p	t	w
"j	j"	q	a	d	g	j	m	p	t	w
"j	k"	q	a	d	g	j	m	p	t	w
"j	l"	q	a	d	g	j	m	p	t	w
"j	m"	q	a	d	g	j	m	p	t	w
"j	n"	q	a	d	g	j	m	p	t	w
"j	o"	q	b	e	i	j	m	r	t	w
"j	p"	q	a	d	g	j	m	p	t	w

FIG. 10G

"-	-"	1	2	3	4	5	6	7	8	9
"j	q"	q	a	d	g	j	m	p	t	w
"j	r"	q	a	d	g	j	m	p	t	w
"j	s"	q	a	d	g	j	m	p	t	w
"j	t"	q	a	d	g	j	m	p	t	w
"j	u"	q	a	d	g	l	m	s	t	w
"j	v"	q	a	d	g	j	m	p	t	w
"j	w"	q	a	d	g	j	m	p	t	w
"j	x"	q	a	d	g	j	m	p	t	w
"j	y"	q	a	d	g	j	m	p	t	w
"j	z"	q	a	d	g	j	m	p	t	w
"j	"	q	a	d	g	j	m	p	t	w
"k	a"	q	a	d	g	j	n	s	t	y
"k	b"	q	a	d	g	j	o	p	t	w
"k	c"	q	a	d	g	j	m	p	t	w
"k	d"	q	a	d	g	j	o	p	t	w
"k	e"	q	a	d	g	l	n	s	t	y
"k	f"	q	a	d	g	j	m	p	t	w
"k	g"	q	a	d	g	j	m	r	t	w
"k	h"	q	a	d	g	j	m	p	t	w
"k	i"	q	a	d	g	l	n	p	t	w
"k	j"	q	a	d	g	j	m	p	t	w
"k	k"	q	a	d	g	j	o	p	t	w
"k	l"	q	a	d	i	j	m	p	t	y
"k	m"	q	a	d	g	j	m	p	t	w
"k	n"	q	a	d	g	j	o	p	t	w
"k	o"	q	a	d	g	l	n	p	t	w
"k	p"	q	a	d	g	j	m	p	t	w
"k	q"	q	a	d	g	j	m	p	t	w
"k	r"	q	a	d	g	j	m	p	t	w
"k	s"	q	a	d	g	j	m	p	t	w
"k	t"	q	a	d	g	j	m	p	t	w
"k	u"	q	a	d	g	j	m	p	t	w
"k	v"	q	a	d	g	j	m	p	t	w
"k	w"	q	a	d	g	j	m	p	t	w
"k	x"	q	a	d	g	j	m	p	t	w
"k	y"	q	a	d	g	j	m	p	t	w
"k	z"	q	a	d	g	j	m	p	t	w

FIG. 10H

"-	-"	1	2	3	4	5	6	7	8	9
"k	"	q	a	d	g	j	m	p	t	w
"l	a"	q	b	d	i	j	n	r	t	y
"l	b"	q	a	d	g	j	o	p	t	w
"l	c"	q	a	d	g	j	o	p	t	w
"l	d"	q	a	e	i	j	n	s	t	w
"l	e"	q	a	d	g	l	m	s	t	x
"l	f"	q	a	d	g	j	m	p	t	w
"l	g"	q	a	d	g	j	m	p	t	w
"l	h"	q	a	d	g	j	m	p	t	w
"l	i"	z	c	e	g	k	n	s	t	w
"l	j"	q	a	d	g	j	m	p	t	w
"l	k"	q	a	e	i	j	m	s	t	w
"l	l"	q	c	e	i	j	o	s	u	y
"l	m"	q	a	d	g	j	o	s	t	w
"l	n"	q	a	e	g	j	m	p	t	w
"l	o"	q	c	d	g	j	o	s	t	w
"l	p"	q	a	d	h	j	m	s	t	w
"l	q"	q	a	d	g	j	m	p	t	w
"l	r"	q	a	e	g	j	m	p	t	w
"l	s"	q	a	e	i	j	o	p	t	w
"l	t"	q	a	e	i	j	o	s	t	w
"l	u"	q	c	d	g	l	m	s	t	w
"l	v"	q	a	e	i	j	m	p	t	w
"l	w"	q	a	e	g	j	m	p	t	w
"l	x"	q	a	d	g	j	m	p	t	w
"l	y"	z	a	d	i	j	n	s	t	w
"l	z"	q	a	d	g	j	m	p	t	w
"l	"	q	a	d	g	j	m	p	t	w
"m	a"	q	c	d	i	k	n	r	t	y
"m	b"	q	a	e	i	l	m	p	t	y
"m	c"	q	c	d	i	j	o	p	t	w
"m	d"	q	a	d	g	j	m	p	t	w
"m	e"	q	a	e	g	l	n	s	t	w
"m	f"	q	a	d	g	j	o	p	t	w
"m	g"	q	a	d	g	j	m	p	t	w
"m	h"	z	a	d	g	j	m	p	t	w
"m	i"	z	c	d	g	l	n	s	t	x

FIG. 10I

"-	-"	1	2	3	4	5	6	7	8	9
"m	j"	q	a	d	g	j	m	p	t	w
"m	k"	q	a	d	g	j	m	p	t	w
"m	l"	q	a	e	g	j	m	p	t	y
"m	m"	q	a	e	i	j	o	p	u	w
"m	n"	q	a	d	g	j	m	p	t	w
"m	o"	q	b	d	i	j	n	r	v	w
"m	p"	q	a	e	i	l	o	r	t	w
"m	q"	q	a	d	g	j	m	p	t	w
"m	r"	q	a	d	g	j	m	p	t	w
"m	s"	q	a	e	g	j	m	p	t	w
"m	t"	q	a	d	g	j	m	p	t	w
"m	u"	q	c	d	g	l	n	s	t	w
"m	v"	q	a	d	g	j	m	p	t	w
"m	w"	q	a	d	h	j	m	p	t	w
"m	x"	q	a	d	g	j	m	p	t	w
"m	y"	q	c	d	g	j	m	s	t	w
"m	z"	q	a	d	g	j	m	p	t	w
"m	"	q	a	d	g	j	m	p	t	w
"n	a"	q	b	d	g	l	m	r	t	w
"n	b"	q	a	d	g	j	m	p	t	w
"n	c"	q	a	e	i	l	o	r	t	y
"n	d"	q	a	e	i	l	o	s	t	y
"n	e"	q	c	e	i	l	n	s	t	w
"n	f"	q	a	e	i	j	o	s	u	w
"n	g"	q	a	e	i	l	m	s	u	w
"n	h"	q	a	d	g	j	m	p	t	w
"n	i"	z	c	e	g	l	n	s	t	x
"n	j"	q	a	d	g	j	m	p	u	w
"n	k"	q	a	e	i	j	n	s	t	w
"n	l"	q	a	e	i	j	o	p	t	y
"n	m"	q	a	e	g	j	m	p	t	w
"n	n"	q	a	e	i	j	o	p	u	y
"n	o"	q	b	d	g	l	n	r	t	w
"n	p"	q	a	d	g	j	o	p	u	w
"n	q"	q	a	d	g	j	m	p	u	w
"n	r"	q	a	d	g	j	m	p	t	w
"n	s"	q	a	e	i	l	m	p	t	w

FIG. 10J

"-	-"	1	2	3	4	5	6	7	8	9
"n	t"	q	a	e	i	l	o	s	u	y
"n	u"	q	a	f	g	j	m	s	t	x
"n	v"	q	a	e	i	j	o	p	t	w
"n	w"	q	a	e	g	j	m	p	t	w
"n	x"	q	a	d	g	j	m	p	t	w
"n	y"	q	b	d	h	j	m	p	t	w
"n	z"	q	a	d	g	j	m	p	t	w
"n	"	q	a	d	g	j	m	p	t	w
"o	a"	q	b	d	g	l	m	s	t	w
"o	b"	q	a	e	i	l	o	s	t	w
"o	c"	q	a	e	h	k	o	s	u	w
"o	d"	q	a	e	i	l	o	s	u	y
"o	e"	q	a	d	g	j	m	s	t	w
"o	f"	q	a	f	g	j	m	p	t	w
"o	g"	q	a	e	i	j	o	r	t	y
"o	h"	q	a	d	g	j	n	p	t	w
"o	i"	q	c	d	g	l	n	p	t	w
"o	j"	q	a	e	g	j	m	p	t	w
"o	k"	q	a	e	i	j	m	s	t	w
"o	l"	q	b	d	i	l	o	s	u	w
"o	m"	q	a	e	i	l	m	p	t	w
"o	n"	q	a	e	g	l	n	s	t	y
"o	o"	q	a	d	g	k	n	s	t	w
"o	p"	q	a	e	h	l	m	p	t	y
"o	q"	q	a	d	g	j	m	p	t	w
"o	r"	q	a	e	g	k	m	r	t	w
"o	s"	q	c	e	i	j	o	s	t	y
"o	t"	q	a	e	h	j	o	s	t	y
"o	u"	q	c	d	g	l	n	r	t	y
"o	v"	q	a	e	i	j	m	p	t	w
"o	w"	q	a	e	i	j	n	s	t	w
"o	x"	q	a	d	i	j	m	p	t	w
"o	y"	q	a	e	g	j	m	s	t	w
"o	z"	q	a	d	g	j	m	p	t	w
"o	"	q	a	d	g	j	m	p	t	w
"p	a"	q	c	d	g	l	n	r	t	y
"p	b"	q	a	e	g	j	m	p	t	w

FIG. 10K

"-	-"	1	2	3	4	5	6	7	8	9
"p	c"	q	a	d	g	j	m	s	t	w
"p	d"	q	a	d	g	j	m	p	t	w
"p	e"	q	c	d	g	j	n	r	t	w
"p	f"	q	a	d	g	j	m	r	t	w
"p	g"	q	a	d	g	j	m	p	t	w
"p	h"	q	a	e	i	j	o	s	t	y
"p	i"	q	c	d	g	l	n	r	t	x
"p	j"	q	a	d	g	j	m	p	t	w
"p	k"	q	a	d	g	j	m	p	t	w
"p	l"	q	a	e	i	j	o	p	u	y
"p	m"	q	a	e	g	j	m	p	t	w
"p	n"	q	a	d	g	j	m	p	t	w
"p	o"	q	c	d	i	l	n	r	t	w
"p	p"	q	a	e	i	l	o	p	t	y
"p	q"	q	a	d	g	j	m	p	t	w
"p	r"	q	a	e	i	j	o	p	t	y
"p	s"	q	a	d	g	j	m	p	t	w
"p	t"	q	c	e	i	j	o	s	t	w
"p	u"	q	b	d	g	j	m	r	t	w
"p	v"	q	a	d	g	j	m	p	t	w
"p	w"	q	a	d	g	j	m	p	t	w
"p	x"	q	a	d	g	j	m	p	t	w
"p	y"	q	a	d	g	j	m	r	t	w
"p	z"	q	a	d	g	j	m	p	t	w
"p	"	q	a	d	g	j	m	p	t	w
"q	a"	q	a	d	g	j	m	p	t	w
"q	b"	q	a	d	g	j	m	p	t	w
"q	c"	q	a	d	g	j	m	p	t	w
"q	d"	q	a	d	g	j	m	p	t	w
"q	e"	q	a	d	g	j	m	p	t	w
"q	f"	q	a	d	g	j	m	p	t	w
"q	g"	q	a	d	g	j	m	p	t	w
"q	h"	q	a	d	g	j	m	p	t	w
"q	i"	q	a	d	g	j	m	p	t	w
"q	j"	q	a	d	g	j	m	p	t	w
"q	k"	q	a	d	g	j	m	p	t	w
"q	l"	q	a	d	g	j	m	p	t	w

FIG. 10L

"-	-"	1	2	3	4	5	6	7	8	9
"q	m"	q	a	d	g	j	m	p	t	w
"q	n"	q	a	d	g	j	m	p	t	w
"q	o"	q	a	d	g	j	m	p	t	w
"q	p"	q	a	d	g	j	m	p	t	w
"q	q"	q	a	d	g	j	m	p	t	w
"q	r"	q	a	d	g	j	m	p	t	w
"q	s"	q	a	d	g	j	m	p	t	w
"q	t"	q	a	d	g	j	m	p	t	w
"q	u"	q	a	e	i	j	o	p	t	w
"q	v"	q	a	d	g	j	m	p	t	w
"q	w"	q	a	d	g	j	m	p	t	w
"q	x"	q	a	d	g	j	m	p	t	w
"q	y"	q	a	d	g	j	m	p	t	w
"q	z"	q	a	d	g	j	m	p	t	w
"q	"	q	a	d	g	j	m	p	t	w
"r	a"	q	c	d	g	l	n	p	t	w
"r	b"	q	a	d	g	j	o	p	t	w
"r	c"	q	a	e	h	l	m	p	u	w
"r	d"	q	a	e	i	j	n	s	v	w
"r	e"	q	a	e	g	l	n	s	v	w
"r	f"	q	a	e	g	j	o	p	t	w
"r	g"	q	a	e	i	j	m	s	u	w
"r	h"	q	a	e	g	j	o	p	t	w
"r	i"	z	c	e	g	l	n	p	t	w
"r	j"	q	a	d	g	j	m	p	t	w
"r	k"	q	a	e	i	l	m	s	t	y
"r	l"	q	a	d	i	j	o	p	t	y
"r	m"	q	a	e	i	j	m	s	t	w
"r	n"	q	a	e	i	j	o	s	t	w
"r	o"	q	b	d	g	l	m	p	u	w
"r	p"	q	a	d	g	j	o	r	t	w
"r	q"	q	a	d	g	j	m	p	t	w
"r	r"	q	a	e	i	j	o	p	t	y
"r	s"	q	a	e	i	j	o	p	t	w
"r	t"	z	a	e	h	j	n	s	u	w
"r	u"	q	c	e	g	l	n	s	t	w
"r	v"	q	a	e	i	j	m	p	t	w

FIG. 10M

"-	-"	1	2	3	4	5	6	7	8	9
"r	w"	q	a	d	i	j	o	p	t	w
"r	x"	q	a	d	g	j	m	p	t	w
"r	y"	q	b	d	i	j	m	p	t	w
"r	z"	q	a	d	g	j	m	p	t	w
"r	"	q	a	d	g	j	m	p	t	w
"s	a"	q	b	d	g	l	m	p	v	y
"s	b"	q	a	d	g	j	m	p	t	w
"s	c"	q	a	d	h	l	o	r	u	w
"s	d"	q	a	d	g	j	n	p	t	w
"s	e"	q	c	e	g	l	n	r	t	y
"s	f"	q	a	e	g	j	m	p	u	w
"s	g"	q	a	d	g	j	m	r	t	w
"s	h"	q	a	e	i	l	o	r	t	w
"s	i"	z	c	d	g	l	n	s	t	x
"s	j"	q	a	d	g	j	m	p	t	w
"s	k"	q	a	e	i	j	m	p	t	w
"s	l"	q	a	e	i	j	o	p	t	y
"s	m"	q	a	e	i	j	o	s	t	w
"s	n"	q	a	e	g	j	m	p	t	w
"s	o"	q	c	f	g	l	m	r	u	w
"s	p"	q	a	e	g	l	o	r	t	w
"s	q"	q	a	d	g	l	m	p	u	w
"s	r"	q	c	d	g	j	m	p	t	w
"s	s"	q	a	e	i	j	o	p	u	w
"s	t"	q	a	e	i	l	o	r	u	y
"s	u"	q	b	e	g	l	m	p	t	w
"s	v"	q	a	d	g	j	m	p	t	w
"s	w"	q	a	e	i	j	o	p	t	w
"s	x"	q	a	d	g	j	m	p	t	w
"s	y"	q	a	d	g	j	m	s	t	w
"s	z"	q	a	d	g	j	m	p	t	w
"s	"	q	a	d	g	j	m	p	t	w
"t	a"	q	c	f	i	l	n	r	t	y
"t	b"	q	a	d	g	j	m	p	t	w
"t	c"	z	a	d	h	j	o	p	t	w
"t	d"	q	a	d	g	j	m	p	t	w
"t	e"	q	c	d	g	l	m	r	u	x

FIG. 10N

"-	-"	1	2	3	4	5	6	7	8	9
"t	f"	q	a	d	i	j	o	p	t	w
"t	g"	q	a	e	g	j	o	p	t	w
"t	h"	q	a	e	i	l	o	r	u	w
"t	i"	z	c	e	g	l	o	s	v	w
"t	j"	q	a	d	g	j	m	p	t	w
"t	k"	q	a	e	g	j	m	p	t	w
"t	l"	q	a	e	i	j	m	p	t	y
"t	m"	q	a	e	g	l	o	p	t	w
"t	n"	q	a	e	g	j	m	p	t	w
"t	o"	q	c	d	g	l	m	r	u	w
"t	p"	q	c	d	g	j	m	p	u	w
"t	q"	q	a	d	g	j	m	p	t	w
"t	r"	q	a	e	i	j	o	p	u	y
"t	s"	q	c	e	i	j	o	p	u	w
"t	t"	q	a	e	i	l	o	p	t	y
"t	u"	q	a	f	i	j	n	r	t	w
"t	v"	q	a	d	g	j	m	p	t	w
"t	w"	q	a	e	i	j	o	p	t	w
"t	x"	q	a	d	g	j	m	p	t	w
"t	y"	q	a	d	g	l	m	p	t	w
"t	z"	q	a	d	g	j	m	p	t	w
"t	"	q	a	d	g	j	m	p	t	w
"u	a"	q	a	d	g	l	n	r	t	w
"u	b"	q	a	e	i	j	m	s	t	w
"u	c"	q	c	e	h	k	m	p	t	w
"u	d"	q	a	e	i	j	o	p	t	y
"u	e"	q	a	d	g	j	n	s	t	w
"u	f"	q	a	f	g	j	m	p	t	w
"u	g"	q	a	e	h	j	m	s	t	w
"u	h"	q	a	d	g	j	m	p	t	w
"u	i"	q	c	d	g	l	n	r	t	w
"u	j"	q	a	d	g	j	m	p	t	w
"u	k"	q	a	d	g	j	m	p	t	w
"u	l"	q	a	d	g	l	m	p	t	y
"u	m"	q	b	e	i	j	m	p	t	w
"u	n"	q	c	d	i	l	n	s	t	w
"u	o"	q	a	d	g	j	m	p	t	w

FIG. 100

"-	-"	1	2	3	4	5	6	7	8	9
"u	p"	q	a	d	i	l	o	p	t	y
"u	q"	q	a	d	g	j	m	p	t	w
"u	r"	q	c	e	i	l	n	s	t	y
"u	s"	q	a	e	i	l	m	s	t	y
"u	t"	q	a	e	i	l	o	s	t	w
"u	u"	q	c	d	g	j	m	p	t	w
"u	v"	q	a	d	g	j	m	p	t	w
"u	w"	q	a	d	g	j	m	p	t	w
"u	x"	q	a	d	g	j	m	p	t	w
"u	y"	q	a	e	g	j	m	s	t	w
"u	z"	q	a	d	g	j	m	p	t	w
"u	"	q	a	d	g	j	m	p	t	w
"v	a"	q	c	d	i	l	n	r	t	w
"v	b"	q	a	d	g	j	m	p	t	w
"v	c"	q	a	d	g	j	m	s	t	w
"v	d"	q	a	d	g	j	m	p	t	w
"v	e"	q	a	d	g	l	n	r	t	w
"v	f"	q	a	d	g	j	m	p	t	w
"v	g"	q	a	d	g	j	m	p	t	w
"v	h"	q	a	d	g	j	m	p	t	w
"v	i"	q	c	e	g	j	n	s	t	w
"v	j"	q	a	d	g	j	m	p	t	w
"v	k"	q	a	d	g	j	m	p	t	w
"v	l"	q	a	d	g	j	m	s	t	w
"v	m"	q	a	d	g	j	m	p	t	w
"v	n"	q	a	d	g	j	m	p	t	w
"v	o"	q	a	d	i	l	o	r	t	w
"v	p"	q	a	d	g	j	m	p	t	w
"v	q"	q	a	d	g	j	m	p	t	w
"v	r"	q	a	d	g	j	m	p	t	w
"v	s"	q	a	d	g	j	m	p	t	w
"v	t"	q	a	d	g	j	m	p	t	w
"v	u"	q	a	d	g	j	m	p	t	w
"v	v"	q	a	d	g	j	m	p	t	w
"v	w"	q	a	d	g	j	m	p	t	w
"v	x"	q	a	d	g	j	m	p	t	w
"v	y"	q	a	d	g	j	m	p	t	w

FIG. 10P

"-	-"	1	2	3	4	5	6	7	8	9
"v	z"	q	a	d	g	j	m	p	t	w
"v	"	q	a	d	g	j	m	p	t	w
"w	a"	q	b	d	i	l	n	r	v	y
"w	b"	q	a	d	g	j	m	p	t	w
"w	c"	q	a	e	g	j	m	p	t	w
"w	d"	q	a	f	g	j	m	p	t	w
"w	e"	q	b	e	i	l	n	r	v	w
"w	f"	q	a	d	g	j	m	p	t	w
"w	g"	q	a	d	g	j	m	p	t	w
"w	h"	q	a	e	i	j	o	p	t	y
"w	i"	q	c	d	g	l	n	s	t	w
"w	j"	q	a	d	g	j	m	p	t	w
"w	k"	q	a	d	g	j	m	p	t	w
"w	l"	q	a	d	g	j	m	p	t	w
"w	m"	q	a	d	g	j	m	p	t	w
"w	n"	q	a	d	g	l	m	s	t	w
"w	o"	q	a	d	g	j	n	r	u	w
"w	p"	q	a	d	h	j	m	p	t	w
"w	q"	q	a	d	g	j	m	p	t	w
"w	r"	q	a	d	i	j	o	p	t	w
"w	s"	q	a	e	g	j	m	p	t	w
"w	t"	q	a	d	g	j	m	p	t	w
"w	u"	q	a	d	g	j	m	p	t	w
"w	v"	q	a	d	g	j	m	p	t	w
"w	w"	q	a	d	g	j	m	p	t	w
"w	x"	q	a	d	g	j	m	p	t	w
"w	y"	q	a	d	g	j	m	p	t	w
"w	z"	q	a	d	g	j	m	p	t	w
"w	"	q	a	d	g	j	m	p	t	w
"x	a"	q	c	d	g	j	m	p	t	w
"x	b"	q	a	d	g	j	m	p	t	w
"x	c"	q	a	e	h	j	m	p	t	w
"x	d"	q	a	d	g	j	m	p	t	w
"x	e"	q	c	d	g	l	m	s	t	x
"x	f"	q	a	d	g	j	m	p	t	w
"x	g"	q	a	d	g	j	m	p	t	w
"x	h"	q	a	d	g	j	m	p	t	w

FIG. 10Q

"-	-"	1	2	3	4	5	6	7	8	9
"x	i"	q	c	d	g	j	n	s	t	w
"x	j"	q	a	d	g	j	m	p	t	w
"x	k"	q	a	d	g	j	m	p	t	w
"x	l"	q	a	d	i	j	m	p	t	w
"x	m"	q	a	d	g	j	m	p	t	w
"x	n"	q	a	d	g	j	m	p	t	w
"x	o"	q	a	d	g	j	m	p	t	w
"x	p"	q	a	e	i	l	o	p	t	w
"x	q"	q	a	d	g	j	m	p	t	w
"x	r"	q	a	d	g	j	m	p	t	w
"x	s"	q	a	e	i	j	m	p	t	w
"x	t"	q	a	e	g	j	m	r	u	w
"x	u"	q	a	d	g	j	m	p	t	w
"x	v"	q	a	d	g	j	m	p	t	w
"x	w"	q	a	d	g	j	m	p	t	w
"x	x"	q	a	d	g	j	m	p	t	w
"x	y"	z	a	d	g	j	m	p	t	w
"x	z"	q	a	d	g	j	m	p	t	w
"x	"	q	a	d	g	j	m	p	t	w
"y	a"	q	a	d	g	j	m	p	t	w
"y	b"	q	a	e	i	j	o	p	t	w
"y	c"	q	a	d	g	l	o	p	t	w
"y	d"	q	a	d	g	j	m	p	t	w
"y	e"	q	a	e	g	j	m	s	t	w
"y	f"	q	a	d	g	j	m	p	t	w
"y	g"	q	a	d	g	j	m	p	t	w
"y	h"	q	a	d	g	j	o	p	t	w
"y	i"	q	c	d	g	j	n	p	t	w
"y	j"	q	a	d	g	j	m	p	t	w
"y	k"	q	a	d	g	j	m	p	t	w
"y	l"	q	a	e	g	j	m	p	t	w
"y	m"	q	a	e	g	j	o	p	t	w
"y	n"	q	c	d	g	j	m	p	t	x
"y	o"	q	a	d	g	j	n	r	u	w
"y	p"	q	a	e	i	j	m	p	t	w
"y	q"	q	a	d	g	j	m	p	t	w
"y	r"	q	a	d	i	j	m	p	t	w

FIG. 10R

"-	-"	1	2	3	4	5	6	7	8	9
"y	s"	q	c	e	i	j	m	p	t	w
"y	t"	q	a	e	h	j	m	p	t	w
"y	u"	q	a	d	g	k	m	r	t	w
"y	v"	q	a	d	g	j	m	p	t	w
"y	w"	q	a	d	h	j	m	p	t	w
"y	x"	q	a	d	g	j	m	p	t	w
"y	y"	q	a	d	g	j	m	p	t	w
"y	z"	q	a	e	g	j	m	p	t	w
"y	"	q	a	d	g	j	m	p	t	w
"z	a"	q	a	d	g	j	m	p	t	w
"z	b"	q	a	d	g	j	m	p	t	w
"z	c"	q	a	d	g	j	m	p	t	w
"z	d"	q	a	d	g	j	m	p	t	w
"z	e"	q	a	d	g	j	n	r	t	w
"z	f"	q	a	d	g	j	m	p	t	w
"z	g"	q	a	d	g	j	m	p	t	w
"z	h"	q	a	d	g	j	m	p	t	w
"z	i"	q	a	d	g	j	n	p	t	w
"z	j"	q	a	d	g	j	m	p	t	w
"z	k"	q	a	d	g	j	m	p	t	w
"z	l"	q	a	d	g	j	m	p	t	w
"z	m"	q	a	d	g	j	m	p	t	w
"z	n"	q	a	e	g	j	m	p	t	w
"z	o"	q	a	d	g	j	n	p	t	w
"z	p"	q	a	d	g	j	m	p	t	w
"z	q"	q	a	d	g	j	m	p	t	w
"z	r"	q	a	d	g	j	m	p	t	w
"z	s"	q	a	d	g	j	m	p	t	w
"z	t"	q	a	d	g	j	m	p	t	w
"z	u"	q	a	d	g	j	m	p	t	w
"z	v"	q	a	d	g	j	m	p	t	w
"z	w"	q	a	d	g	j	m	p	t	w
"z	x"	q	a	d	g	j	m	p	t	w
"z	y"	q	a	d	g	j	m	p	t	w
"z	z"	q	a	d	g	j	m	p	t	w
"z	"	q	a	d	g	j	m	p	t	w
"	a"	q	c	d	i	l	n	r	t	w

FIG. 10S

"-	-"	1	2	3	4	5	6	7	8	9
"	b"	q	a	e	i	l	o	r	u	y
"	c"	q	a	e	h	l	o	r	u	y
"	d"	q	a	e	i	j	o	r	u	w
"	e"	q	a	d	i	l	n	s	v	x
"	f"	q	a	e	i	l	o	r	u	w
"	g"	q	a	e	i	l	o	r	u	w
"	h"	q	a	e	i	j	o	p	t	w
"	i"	q	c	f	g	j	n	s	t	w
"	j"	q	a	e	g	j	o	p	u	w
"	k"	q	b	e	i	j	n	p	t	w
"	l"	q	a	e	i	l	o	p	u	y
"	m"	q	a	e	i	k	o	s	u	y
"	n"	q	a	e	i	j	o	p	u	w
"	o"	z	b	f	g	k	n	r	u	w
"	p"	q	a	e	h	l	o	r	u	w
"	q"	z	a	d	g	j	m	p	u	w
"	r"	q	a	e	i	j	o	s	u	w
"	s"	q	c	e	h	l	o	p	t	y
"	t"	q	a	e	h	j	o	r	u	w
"	u"	q	a	d	i	k	n	s	t	w
"	v"	q	a	e	i	l	o	p	t	w
"	w"	q	a	e	i	j	o	r	t	w
"	x"	q	a	d	g	j	m	p	t	y
"	y"	q	a	e	i	j	o	p	u	w
"	z"	q	a	e	i	j	o	p	t	y
"	"	q	a	f	i	l	o	s	t	w

FIG. 10T

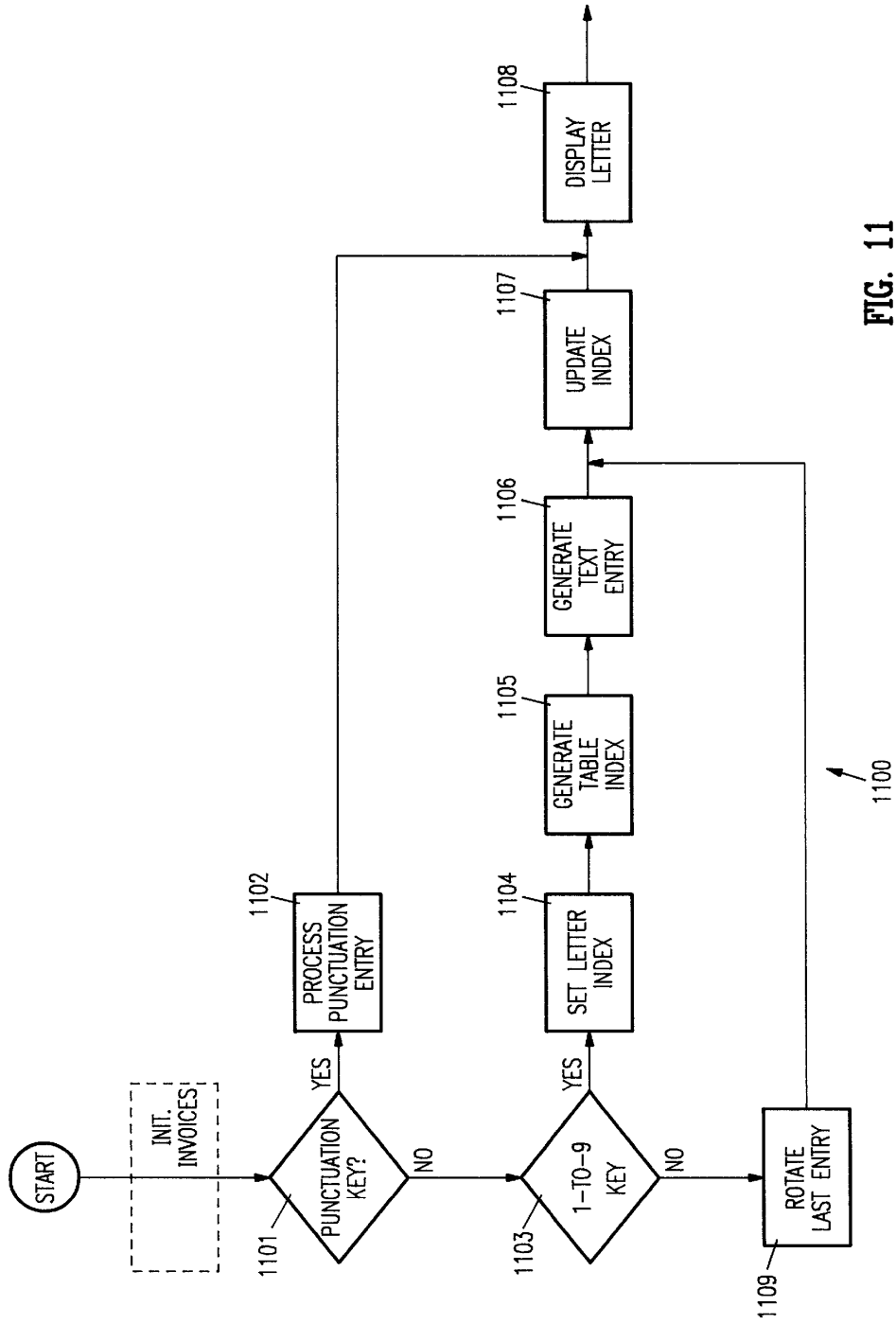
START
INIT. INVOICES
PUNCTUATION KEY?
1101
YES
NO
PROCESS PUNCTUATION ENTRY
1102
1-TO-9 KEY
1103
YES
NO
SET LETTER INDEX
1104
GENERATE TABLE INDEX
1105
GENERATE TEXT ENTRY
1106
UPDATE INDEX
1107
DISPLAY LETTER
1108
ROTATE LAST ENTRY
1109
1100

FIG. 11

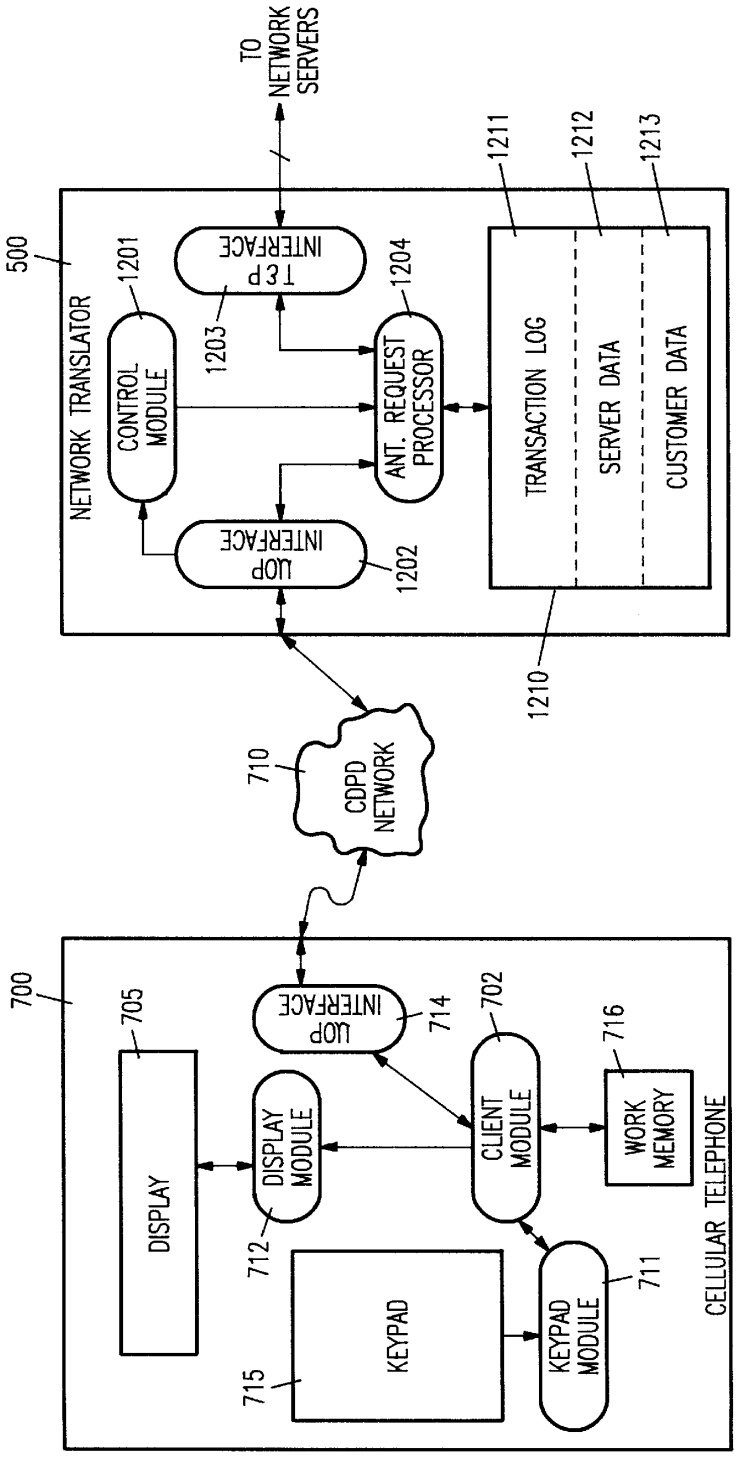
TO NETWORK SERVERS
500
NETWORK TRANSLATOR
1201
CONTROL MODULE
TCP INTERFACE
1203
1204
ANT. REQUEST PROCESSOR
UDP INTERFACE
1202
1211
1212
1213
TRANSACTION LOG
SERVER DATA
CUSTOMER DATA
1210
710
CDPD NETWORK
700
705
DISPLAY
DISPLAY MODULE
712
UDP INTERFACE
714
702
CLIENT MODULE
716
WORK MEMORY
KEYPAD
715
KEYPAD MODULE
711
CELLULAR TELEPHONE

FIG. 12

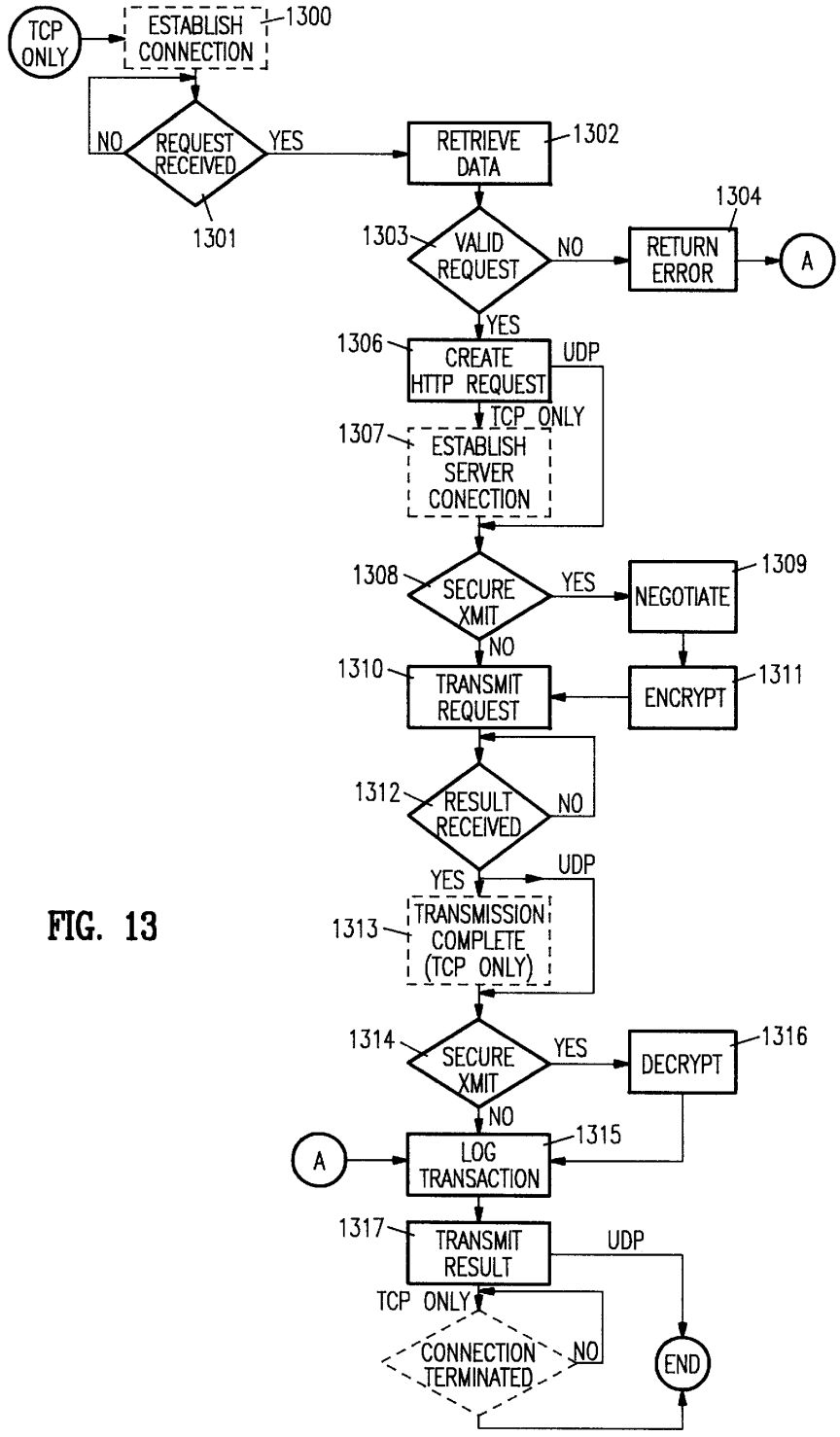
TCP ONLY
ESTABLISH CONNECTION
1300
NO
REQUEST RECEIVED
YES
1301
RETRIEVE DATA
1302
1303
VALID REQUEST
NO
RETURN ERROR
1304
A
YES
1306
CREATE HTTP REQUEST
UDP
TCP ONLY
1307
ESTABLISH SERVER CONECTION
1308
SECURE XMIT
YES
NEGOTIATE
1309
NO
1310
TRANSMIT REQUEST
ENCRYPT
1311
1312
RESULT RECEIVED
NO
YES
UDP
1313
TRANSMISSION COMPLETE (TCP ONLY)
1314
SECURE XMIT
YES
DECRYPT
1316
NO
A
LOG TRANSACTION
1315
1317
TRANSMIT RESULT
UDP
TCP ONLY
CONNECTION TERMINATED
NO
END

FIG. 13

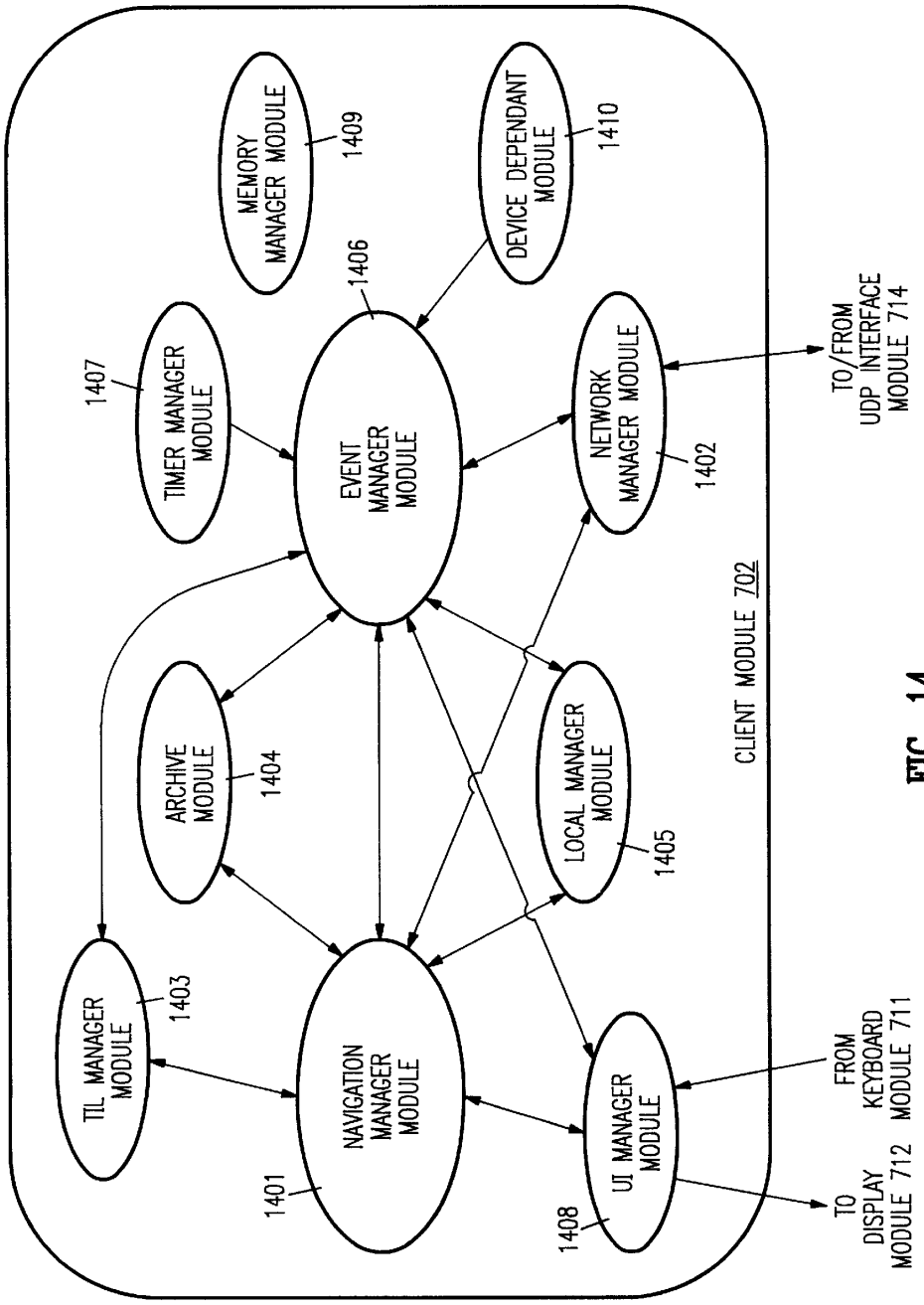
MEMORY MANAGER MODULE
1409
DEVICE DEPENDANT MODULE
1410
1406
1407
TIMER MANAGER MODULE
EVENT MANAGER MODULE
NETWORK MANAGER MODULE
1402
TO/FROM UDP INTERFACE MODULE 714
CLIENT MODULE 702
ARCHIVE MODULE
1404
LOCAL MANAGER MODULE
1405
TIL MANAGER MODULE
1403
NAVIGATION MANAGER MODULE
1401
UI MANAGER MODULE
1408
FROM KEYBOARD MODULE 711
TO DISPLAY MODULE 712

FIG. 14

METHOD AND ARCHITECTURE FOR AN INTERACTIVE TWO-WAY DATA COMMUNICATION NETWORK

CROSS REFERENCE TO MICROFICHE APPENDIX

Appendix A, which is a part of the present disclosure, is a microfiche appendix consisting of six sheets of microfiche having a total of 369 frames. Microfiche Appendix A is a listing of one embodiment of the client module of this invention, which is described more completely below, and a server, as described more completely below, to communicate and interact with the client module of this invention.

A portion of the disclosure of this patent document contains material, that includes, but is not limited to, Microfiche Appendix A, Appendix I, Appendix II, and FIGS. **10A** to **10T**, which is subject to copyright protection. The copyright owner has no objection to the facsimile reproduction by anyone of the patent document or the patent disclosure, as it appears in the Patent and Trademark Office patent files or records, but otherwise reserves all copyright rights whatsoever.

BACKGROUND OF THE INVENTION

1. Field of the Invention

This invention relates generally to data communications, and in particular to two-way data communication devices including a cellular telephone, a two-way pager, and a telephone that permit a user to interface with and interact with a server on a computer network.

2. Description of Related Art

For at least the last five years, the wireless communication industry has tried to merge computing with wireless communications. This industry wide effort has held the promise of bringing software intelligence to telecommunication devices including mobile wireless communications devices such as cellular telephones and two-way pagers as well as standard telephones.

After years of research and development, and hundreds of millions of dollars' investment by some of the largest companies in the field such as Motorola, AT&T, Sony, Matsushita, Phillips and IBM, the results have been nothing but disappointing. Typically, the intelligent communication devices resulting from these efforts include both the hardware necessary for a computer module and the hardware for a wireless communications module. Examples of such products are Simon from IBM and Bell South, MagicLink from Sony, and Envoy from Motorola.

Fundamental design and cost problems arising directly from the approach taken by the designers of these intelligent communication devices have limited widespread market acceptance of these devices. The combination of a wireless communication module with a computing module leads to a device that is too bulky, too expensive, and too inflexible to address the market requirements.

The combination of the two modules is too large and too heavy to fit in a user's pocket. Pocket size is a key requirement of the mobile communication market which remains unmet by these devices

In addition, the cost of these devices is close to the sum of the cost of the computer module and of the communications module, which is around a one thousand dollar end-user price. Market research indicates that the market for intelligent wireless communications devices is at prices around $300. Even with a 20% compound cost decline, it would take five years for the combination units to meet today's customers' price requirements. It is therefore unlikely that devices designed by combining a computer and a wireless module, no matter how miniaturized and cost reduced, can satisfy the cost requirement of the market during this decade.

To succeed in the market place, intelligent wireless communication devices must be able to support a wide variety of applications specific to each market segment. Typically, these applications must be added to the device by the end-user after purchase. Thus, the device must provide a method for loading the initial application and for subsequent updating of the application.

The price sensitivity for intelligent communication devices and the size limitations means that an intelligent communication device cannot support the amount of core memory (RAM), a hard disk or non-erasable memory, or a traditional floppy disk drive, commonly found on computers. These limitations close the traditional routes for delivering new applications or updates to intelligent communications devices.

As a result, the current crop of intelligent communication devices run only the few applications which were burned into their ROMs at the factory or which are contained in a ROM card plugged into a slot designed for this purpose. This scheme lacks the flexibility needed to run the thousands of applications required to address the fragmented requirements of the market and provides no simple method for updating the applications after the device has been sold.

Two other communication oriented attempts at bringing intelligence to telephones are Short Messaging Service (SMS) and Analog Display Service Interface (ADSI). SMS specifies how messages are delivered to and from a cellular telephone and how the cellular telephone should store the messages. SMS also defines some simple processing which the cellular telephone can perform on the message, such as calling a telephone number embedded in the message.

SMS's architecture is similar to that of paging networks with the difference that devices implementing the SMS architecture operate over the control channel of the cellular telephone network. SMS is deployed primarily in Europe over the GSM network.

SMS messages are not delivered in real time. The time delays can range from 30 seconds up to 10 minutes, which makes SMS unsuitable for real time applications. The main purpose of SMS is the delivery of messages. SMS does not specify an application protocol or cellular telephone application module which further restricts its usefulness in running applications on cellular telephones. After a few years of deployment in Europe, SMS implementations have been limited to notification services such as two-way paging and voice mail notification.

SMS as a medium is unsuited to building applications which allows the retrieval, manipulation, and storage of information. This is the reason why the industry giants have not turned to SMS in their quest to add intelligence to cellular telephones, but have consistently attempted to combine a computer module with a wireless communications module.

ADSI was designed as an extension to Interactive Voice Response Systems. ADSI allows a smart telephone with a small screen to display prompts to assist users in choosing among various options. By using visual prompts instead of cumbersome voice prompts, ADSI is thought to make the use of interactive voice services easier and faster.

ADSI allows data to be sent from the service provider to the telephone in the form of screens. ADSI also allows the

telephone to respond through touch tone signaling with a special coding to describe the full alphanumeric character set. With ADSI, a telephone is primarily a passive device. Services send text screens to the telephone, and the telephone sends back short strings indicating the choices the user made from the text screen.

ADSI makes no provisions for performance of processing in the telephone. As a result, ADSI generates a high traffic load on the telephone network since each user input is sent back to the service for processing. This makes ADSI unsuitable for wireless networks where bandwidth is at a premium and "air efficiency" is one of the most sought after qualities. The lack of processing capability in the telephone and the high bandwidth requirements of ADSI have prevented it from being considered by the industry for implementing intelligent wireless devices.

Up to now, intelligent communication devices have combined a computing module with a wireless communications module. However, to gain widespread acceptance, a two-way data communication device with processing capability and the ability to run a wide variety of differing user applications is needed. In addition, such a device should be comparable in size, cost, and weight to a cellular telephone.

SUMMARY OF THE INVENTION

According to the principles of this invention, the prior art limitations of combining a computer module with a wireless communication module have been overcome. In particular, a two-way data communication device of this invention, such as a cellular telephone, two-way pager, or telephone includes a client module that communicates with a server computer over a two-way data communication network. The principles of this invention can be used with a wide variety of two-way data communication networks. For example, two-way data communication networks for cellular telephones that may be used include a cellular digital packet data network as well as TDMA, CDMA, and GSM circuit switched data networks; and the AMPS analog cellular network with a modem. Similarly, for two-way pagers, two-way data communication networks include PACT, the new AT&T endorsed two way paging standard, or other priority two-way paging networks with data transport capability. The two-way data communication network for a telephone is the public switched telephone network.

Using the two-way communication device that includes the client module, a user can provide information to the server computer, retrieve information from the server computer, provide data to an application on the server computer which uses the data and provides information to the two-way communication device, or sends the information to another location. The functionally provided to the user of the two-way communication device is limited only by the applications available on a server computer that is accessible to the user over the two-way data communication network.

This invention allows for the first time two-way communications devices such as cellular telephones, two-way pagers, and telephones to become open application platforms which in turn empowers software developers to deliver value-added applications and services to any two-way communication device that incorporates the principles of this invention. This is a radical shift from the current situation where telephones and two-way pagers are closed, proprietary systems. Consequently, an even playing field is created for the market to invent new uses for two-way communication devices and for two-way communication networks. Any entity from corporations to individuals can make new applications available to the installed base of two-way data communication devices that include this invention without physical modification or addition to the two-way communication device. Years after purchase, a two-way communication device incorporating this invention will run all the applications which were developed since its purchase.

Further, all these applications are available without the end user having to add anything or make any modification to the two-way communication device. Also, the applications are independent of the two-way data communication network. The applications do not depend on any feature of the two-way data communication network. Thus, the applications are unaffected by a change in the two-way data communication network.

Also, the applications on the server computer are independent of the two-way data communication device with which the server computer is interacting. An application on the server computer can communicate with any two-way data communication device that includes the client module of this invention and a network interface module to transmit data over, and receive data from the two-way data communication network. These two features mean that an investment in developing an application is insulated from either advances in two-way data communication devices, or advances in two-way data communication network technology.

As indicated above, the two-way data communication device of this invention utilizes a client module to transmit a message including a resource locator selected by the user over the two-way data communication network to a server on a server computer on the computer network. For example, the computer network can be a corporate wide area network, a corporate local area network, the Internet, or any combination of computer networks.

The server processes the message, i.e, executes the application addressed by the resource locator and transmits a response over the two-way data communication network to the two-way data communication device, which stores the response in a memory. The client module interprets the response and generates a user interface using information in the response. In one embodiment, the user interface includes at least one user data input option that is associated with a resource locator. In another embodiment, the user interface is a display.

The resource locator associated with the at least one user data input option can address any one of a wide variety of objects. In one embodiment, the resource locator associated with the at least one user data input option addresses an object on the server computer that transmitted the response. In another embodiment, the resource locator addresses an object on another server computer coupled to the two-way data communication network. In yet another embodiment the resource locator addresses an object stored in the two-way communication device.

When the user selects the at least one user data input option, the client module interprets the selection and if required, appends any input data to the resource allocator associated with the at least one user data input option. The client module transmits a message including the resource locator with any appended input data to the server computer. Alternatively, the resource locator with any appended data can be addressed to another server computer, or can address an object stored in the two-way communication device. If the resource locator addresses an object on a server

computer, the client module provides the message to the network interface module which in turn transmits the message over the two-way data communication network.

Thus, in this embodiment, the message originally transmitted to the two-way data communication device included all the information necessary for the client module to generate the user interface, to associate the user selection and any data entered with a particular resource locator, and to transmit the appropriate resource locator in a subsequent message. The client module includes an interpreter that processed the information in the message. Since the message included all the information needed by the client module, the server computer that transmitted the message retained no state information concerning the message. Consequently, the server computer is defined as a stateless server computer.

An important aspect of this invention is that the message includes all information necessary for the client module to generate the user interface and a particular user interface can be independent from other user interfaces. Unlike prior art systems that gave the user a predetermined menu from which to select items, or limited the user to an E-mail like format, according to the principles of this invention, the user interfaces and possible interactions available to the user are determined only by the applications that developers make available. The possible interactions and user interfaces for one application can be totally different and independent from the possible interactions and user interfaces of another application. Thus, a cellular telephone, two-way pager, and a telephone all truly become an open platform.

These features of the invention are a significant departure from prior art systems. Typically, in the prior art, use of a particular application on a particular platform required that the application be compatible with the operating system on that platform. Further, each time a new version of the application was released, the user was required to take steps to update the application on the user's platform. Further, if the user of the platform did not modify the operating system as new versions of the operating system were released, at some point in time, the platform would no longer be capable of processing a new version of an application that required a current version of the operating system.

This invention eliminates these problems. As explained above, the client module in the two-way data communication device functions an interpreter. The application on the server computer provides all information necessary for the interpreter to generate a user interface on the two-way data communication device, and in response to user selections or data input using the user interface, to route messages to an appropriate server, i.e, either the server that sent the original information or another server.

Thus, the client module only interprets this information and interacts appropriately with the hardware of the two-way data communication device. Consequently, to update an application requires only changes on the server computer and not changes in each two-way data communication device that communicates with that server computer. This invention eliminates the usual requirement for distribution of application software, and application software updates to the end user of the two-way data communication device.

In one embodiment, a two-way data communication system for communication between a server computer and a two-way data communication device selected from a group consisting of a cellular telephone, a two-way pager, and a telephone, includes a two-way data communication network, a server computer coupled to the two-way data communication network, and a two-way data communication device coupled to the two-way data communication network. The server computer includes a two-way data communication interface module coupled to the two-way data communication network, and a server coupled to the two-way data communication interface module. The server receives a message including a resource locator from the two-way data communication network. The resource locator includes an address of the server computer and of an application on that server computer. The server processes the message using the resource locator. In this embodiment, the server transmits a response to the message over the two-way data communication network.

The two-way data communication device, selected from the group consisting of a cellular telephone, a two-way pager, and a telephone, includes a network interface module coupled to the two-way data communication network, and a client module coupled to the network interface module. The client module transmitted the message including the resource locator to the server over the two-way data communication network. The client module also processes the response to the message from the server. The response includes information for a user interaction over the two-way data communication network.

The client module of this invention is lightweight, and thus requires only lightweight resources in a two-way data communication device. Consequently, the client module can use existing resources in such a device and therefore does not add to the cost of the two-way data communication device.

In one embodiment, the interpreter within the client module includes a plurality of managers including a user interface manager coupled to a display of the two-way data communication device where the user interface manager handles interactions with the display. The user interface manager also is coupled to a keypad of the two-way data communication device and handle interactions with the keypad. Herein, a keypad can be a telephone keypad, the keys found on a two-way pager, or other data input interface of a two-way communication device.

In one embodiment, the response generated by the server computer includes a plurality of resource locators and at least one of the plurality of resource locators includes an address to another server coupled to the communication network.

According to the principles of this invention, a method for using a two-way data communication device, selected from a group consisting of a cellular telephone, a two-way pager, and a telephone, to communicate with a server computer includes:

generating a message by a client module in response to data entered by the user of a two-way data communication device coupled to a two-way data communication network,

wherein the client module executes on a microcontroller of the two-way data communication device; and

the message includes a resource locator;

transmitting the message over the two-way data communication network to a server computer wherein the server computer is identified by the resource locator;

executing an application on the server computer identified by the resource locator to generate a response to the message; and

transmitting the response to a location identified by the application.

As indicated above the location can be the two-way communication device, another server computer, or some other device coupled to the server computer.

BRIEF DESCRIPTION OF THE DRAWINGS

FIG. **1** illustrates one embodiment of the airnet network of this invention that includes the two-way data communication devices of this invention.

FIGS. **2**A to **2**H are illustrations of a series of screen displays of the two-way data communication device of this invention that illustrate one application of the principles of this invention.

FIGS. **3**A to **3**F are illustrations of a series of screen displays of the two-way data communication device of this invention that illustrate a second application of the principles of this invention.

FIGS. **4**A to **4**I are illustrations of a series of screen displays of the two-way data communication device of this invention that illustrate yet another application of the principles of this invention.

FIG. **5** illustrates another embodiment of the airnet network of this invention that includes the two-way data communication devices of this invention and an airnet network translator.

FIG. **6** is a block diagram of a mobile wireless communication device that includes the client and support modules of this invention.

FIG. **7** is a more detailed diagram of the mobile wireless communication device and a server computer within the airnet network architecture of this invention.

FIGS. **8**A to **8**D are a process flow diagram showing the process performed by the client in the mobile wireless communication device and the server on the server computer of FIG. **7**.

FIG. **9** is a diagram of a mobile wireless communication device of this invention that includes a novel predictive text entry system that is a part of this invention.

FIGS. **10**A to **10**T are one embodiment of a letter frequency table.

FIG. **11** is a process flow diagram for one embodiment of a data entry process that includes the novel predictive data entry process of this invention.

FIG. **12** is a more detailed diagram of the mobile wireless communication device and the airnet network translator within the airnet network architecture of the another embodiment of this is invention.

FIG. **13** is a process flow diagram showing the various processes performed by the airnet network translator of FIG. **12**.

FIG. **14** is a diagram illustrating the various module managers included in one embodiment of the client module of this invention.

Herein, objects with the same reference numeral are the same object. Also, the first number of a reference numeral indicates the Figure where the object first appeared.

DETAILED DESCRIPTION

According to the principles of this invention, a novel airnet network **150**, i.e., a two-way data communication network, interconnects any one, any combination, or all of two-way data communication devices **100**, **101**, or **102**, that each include this invention, with a wide variety of computer networks **120**, **130**, and **140**, for example. As explained more completely below, each two-way data communication device **100**, **101**, and **102** can be configured to transmit data to and receive data from any desired combination of computers on computer networks **120**, **130**, and **140**. Airnet network **150** is the two-way data communication path from the two-way data communication device to the particular computer that is accessed by the user of that two-way data communication device.

Each wireless communication device **100** that includes this invention can communicate over airnet network **150** with any server computer **121**, **131**, and **141** on airnet network **150** that includes at least one application that communicates and interacts with the processes of this invention that are included within device **100**. Thus, device **100** can access information on the computer network and provide information to the computer network. Similarly, a two-way pager **101**, and a telephone **102** with a modem **103**, that each include this invention, can communicate over airnet network **150** with any of server computers **121**, **131**, and **141** that includes at least one application that communicates and interacts with the processes of this invention that are included within devices **101** and **102**.

As explained more completely below, an application on a server computer can be accessed by any two-way data communication device that can communicate with that server computer. The application is independent of the particular type of two-way data communication device that is used to access the application and independent of the particular two-way data communication network used. This means that a user can access an application from anywhere so long as the user has a two-way data communication device that can communicate with the server computer.

In one embodiment, a process on wireless communication device **100** is configured as a client process and the applications on server computers **121**, **131** and **141** on airnet network **150**, that communicate with the client process, are server processes. This architecture allows some of the processing burden to be moved away from cellular telephone **100**, across airnet network **150**, to a server module on any computer on airnet network **150**.

Specifically, a wireless communication device **100** e.g., a cellular telephone, with a telephone like keypad, communicates via a data capable cellular telephone network **110**, e.g., a cellular digital packet data telephone network, with an application on a server computer on a computer network that has an interface to data capable cellular telephone network **110**. For example, the computer network can be a corporate wide area network **120**, a corporate local area network **130**, or perhaps the Internet **140**.

Similarly, a two-way pager **101** communicates via a two-way pager network **111** with an application on a server computer on a computer network that has an interface to two-way pager network **111**. Again, for example, the computer network can be a corporate wide area network **120**, a corporate local area network **130**, or perhaps the Internet **140**. Finally, a telephone **102** communicates via a modem **103** and public switched telephone network **112** with an application on a server computer on a computer network that has an interface to public switched telephone network **112**. As with the other two-way data communication devices, the computer network can be, for example, a corporate wide area network **120**, a corporate local area network **130**, or perhaps the Internet **140**.

In each of two-way data communication devices **100**, **101**, and **102**, the client process is stored as a client module in the device and the execution of the client module on a microcontroller in the device is sometimes referred to as the client process. The client process performs important processing functions locally. This allows the communication between the client process, hereinafter sometimes referred to as simply client, and the server process, hereinafter sometimes

referred to as server, to be minimized and the server computing requirements to grow slowly as the number of clients, i.e., users, grows.

The client module is small, e.g., under 64 KByte, and requires only low processing power congruent with the memory chips and built-in microcontrollers in two-way data communication devices such as cellular telephone **100**, two-way pager **101**, and telephone **102**. Thus, unlike the prior art attempts at an intelligent telephone, the cost, size, and battery life of either cellular telephones, two-way pagers, or telephones that incorporate this invention are not adversely affected.

While client/server architectures have been used extensively in computer networks, a client/server architecture implemented using two-way communication data devices such as cellular telephone **100**, two-way pager **101**, or telephone **102** yields new and unexpected results. This invention allows for the first time a wide variety of two-way data communication devices including but not limited to cellular telephones, two-way pagers, and telephones to become open application platforms which in turn empowers software developers to deliver value added applications and services to any two-way data communication device which incorporates the principles of this invention.

This is a radical shift from the current situation where cellular telephones, two-way pagers, and telephones are closed, proprietary systems. Consequently, an even playing field is created for the market to invent new uses for cellular telephones and data capable cellular networks, for two-way pagers and two-way pager networks, and for telephones on the public switched network.

Any entity from corporations to individuals can make new applications available to the installed base of data ready cellular telephones, two-way pagers, and telephones, that include this invention without physical modification or addition to the devices. Years after purchase, a two-way data communication device with this invention can run all the applications which were developed since its purchase. Further, all these applications are available without the user having to add anything or make any modification to the two-way data communication device. These features of the invention are a significant departure from prior art systems. Typically, in the prior art, use of a particular application on a particular platform required that the application be compatible with the operating system on that platform. Further, each time a new version of the application was released, the user was required to take steps to update the application on the user's platform. Further, if the user of the platform did not modify the operating system as new versions of the operating system were released, at some point in time, the platform would no longer be capable of processing a new version of an application that required a current version of the operating system.

Also, small devices, such as cellular telephones or pagers, usually do not have card slots, floppy or hard disk drives, or other means commonly found on computers to add or update applications. This limitation has led prior art attempts at intelligent communication devices to design closed systems with fixed functionality. Such devices can neither adapt nor be adapted to the fast changing requirements of the market place and so have not met with market success.

This invention eliminates these problems. The client process in the two-way data communication device functions an interpreter. The application on the server computer provides all information necessary for the interpreter to generate a user interface on the two-way data communication device, and in response to user selections or data input using the user interface, to route messages to an appropriate server, i.e, either the server that sent the original information or another server.

Thus, the client process only interprets this information and interacts appropriately with the hardware of the two-way data communication device. Consequently, to update an application requires only changes on the server computer and not changes in each two-way data communication device that communicates with that server computer. This invention eliminates the usual requirement for distribution of application software, and application software updates to the end user of the two-way data communication device.

For example, if initially, two-way pager **101** receives a response to a message from an application on server computer **121** on corporate wide area network **120**, the interpreter in two-way pager **101** generates a user interface on display screen **106** using information in the message. As described more completely below, options presented in the user interface can allow the user to access information, or provide information to any one, any combination of, or all of networks **120**, **130**, and **140**.

Specifically, in the response to the message from two-way pager **101**, the application initially accessed on server computer **121** included resource locators for applications on each of networks **120**, **130**, **140**, typically common gateway interface programs, accessible to the user of pager **101** as well as information required to generate the user interface. Consequently, when the user makes a particular selection or enters data, the interpreter accesses the appropriate resource locator and appends any necessary data to the resource locator. The client transmits a message including the resource locator to the appropriate server.

As shown by this example, the applications on networks **120**, **130**, **140** send to the two-way data communication device all information necessary to generate a user interface, and to process all user input. Consequently, only an application must be changed to update the information provided to the two-way data communication device.

In addition, since all the information needed by the client to generate a user interface and all information necessary for the client process to respond to any input data is included in the message, the computer server does not retain any state information concerning the information transmitted to the client process. Consequently, the computer server is stateless.

Each two-way data communication device **100**, **101**, and **102** that utilizes airnet network **150**, includes a data communication capability, a display screen, preferably a multi-line display screen, and storage capability for the processes of this invention in an on-board memory, and for the message being processed. Nearly every data capable cellular telephone, e.g., a telephone that utilizes a cellular digital packet data network, includes excess on-board memory capacity and a multi-line display screen. These hardware resources are often available, but unused in a data capable cellular telephone because of the indivisibility of memory chip packages. The inclusion of the processes of this invention in such cellular telephones therefore has very little effect on the cost, size, and power consumption of the cellular telephone. Similarly, the inclusion of the processes of this invention in two-way pagers and telephones, that include a microcontroller and memory, has very little affect on the cost, size, and power consumption of these devices.

Thus, unlike prior art approaches that attempted to combine a computer module and a wireless communication

module in a single package, this embodiment of the invention preferably utilizes the memory and processing power that currently exists in the cellular telephone **100**, two-way pager **101**, telephone **102** or other wireless or landline two-way data communication devices. This approach limits the cost of the resulting device and overcomes many of the problems of the prior art devices, e.g., the size and weight of the two-way data communication device is not changed, and, as explained above, updating user applications is removed from cellular telephone **100**, two-way pager **101**, and telephone **102**.

In particular, unlike devices produced by previous industry attempts at combining computing modules and a wireless cellular module, two-way data communication devices which incorporate this invention are size and cost competitive with voice-only telephones and can, for the first time, satisfy the market cost and size requirements for an intelligent cellular telephone, for example.

The incremental cost of supporting interactive applications on cellular telephone **100**, two-way pager **101**, and telephone **102** is reduced to at most a slightly larger screen that is required to display the application to the user. This is a fraction of the cost of adding a complete computer module to a cellular telephone, for example.

The incremental power consumption required to support this invention is also very small, as the incremental memory and screen required are small consumers of power compared to the cellular radio itself. Intelligent two-way data communication devices built according to the principles of this invention are not expected to have a significantly lower battery life than standard cellular telephones, or two-way pagers, for example.

The configuration and processes of the client process in two-way data communication devices **100**, **101**, and **102** are similar when the differences in the devices and the two-way data communication network over which the devices communicate are considered. Consequently, in the following description, the operation of data-ready cellular telephone **100** is considered. The same or similar operations can be performed on two-way data communication devices **101**, and **102**. The main difference is that some device dependent features within the client module must be changed to accommodate the particular hardware used in the two-way communication device. However, the client module architecture described more completely below limits the number of changes that must be made.

As indicated above, in response to user actions, wireless communication device **100** transmits a message, typically a data request, to a server computer **121** on computer network **120** and receives a response to the message. Alternatively, the user action can result in directions to server computer **121** on computer network **120** to transmit the response to the message to another location or to another user. Also, wireless communication device **100** can receive a message from any one of the computers coupled to airnet network **150**.

An important aspect of this invention is that the client module interpreter in wireless communication device **100** generates a user interface by which the user can both initiate and receive messages from a variety of applications. The interactions take place in realtime and are not limited by the client module interpreter. The uses of wireless communication device **100** are limited only by the availability of applications on server computers.

The applications available are determined by application developers. Prior to considering one implementation of the invention in further detail, several illustrative examples of applications that can be implemented according to the principles of this invention are described. These applications are illustrative only and are not intended to limit the invention to the particular applications and features described.

In one use, the user configures cellular telephone **100** to access server computer **121** on XYZ corporate wide area network **120**. In response to the access by the user, server computer **121** transmits a card deck to cellular telephone **100** over data capable cellular telephone network **110**. As explained more completely below, a card deck includes one or more cards, and each card is interpreted by the client module to generate a user interface screen.

In the embodiment illustrated in FIG. **2**A, the initial card deck transmitted to cellular telephone **100** includes an introductory display card and a choice card. FIG. **2**A is an example of introductory screen display **200** that is generated on display screen **105** by the client process in cellular telephone **100** by interpreting the display card. As used herein, a display screen is the physical display apparatus in a two-way communication device. A screen display is the image presented on the display screen.

In this embodiment, display screen **105** is a pixel display that displays graphics. In another embodiment, display screen **105** displays only text and so the graphics would not appear on display screen **105**. Screen display **200**, and other screen displays described more completely below, include a horizontal arrow, i.e., a multi-card deck indicator, to communicate to the user that the current deck includes another card. The inclusion of screen indicators, such as the multi-card deck indicator, to communicate with the user is optional. The functionality of this invention is independent of such screen indicators.

When the user presses a predetermined key, or key sequence, the client process in cellular telephone **100** interprets the next card in the card deck, i.e., the choice card, and in turn generates a menu **201** (FIG. **2**B) of items that can be accessed by the user. In this embodiment, each of the menu items is available on server computer **121** to the user who, in this example, is a representative of XYZ corporation visiting ABC Designs.

As explained more completely below, each of the menu items is associated with a resource locator that includes an address of the particular object associated with that menu item, typically an address to a common gateway interface program on server computer **121**. In general, a resource locator includes an address and may include appended data. The address can be to a local object within the two-way data communication device or to a remote object on a server computer. As is known to those skilled in the art, the common gateway interface is an Internet standard that is used to dynamically generate information, e.g., cards. In view of this disclosure, other techniques to generate dynamic cards could be used.

Initially, the highlighting of the first line of menu **201** is not present. When a key on the keypad of cellular telephone **100** is pressed, the menu item corresponding to that key is highlighted on screen **105**. Thus, menu **201** shows the first item highlighted to indicate that the one key was pressed by the user. However, highlighting a selected item is a feature that is specific to this example, and in general is not required to implement the invention. Other methods can be used to indicate the user's choice on display screen **105** such as an arrow pointing at the choice, if such an indication is desired.

After the one key is pressed, the user presses a predetermined key, e.g., an enter key, to verify the selection. Alternatively, in another embodiment, the verification of the

selection is not required. In both embodiments, the resource locator for the selection is transmitted to server computer **121** by the client process in cellular telephone **100** over data capable cellular telephone network **110**. In response to the selection, server computer **121** processes the message containing the selection, and in this embodiment, transmits another card deck to cellular telephone **100**.

The client process in cellular telephone **100** interprets the first card in the deck received from server computer **121**, which is a choice card, and generates a screen display **202**, that includes a second menu as illustrated in FIG. **2**C, on display screen **105**. Initially, none of the items in the second menu are highlighted.

Notice that screen display **202** includes a header, that describes the selection made by the user on screen display **201**, in addition to the second menu of choices available to the user. A multi-display screen card indicator **203**, e.g., in this embodiment, a hand icon with a finger pointing down, shows that the screen associated with the current choice card includes additional items that are not shown on display screen **105**. Herein, a screen can be larger than the number of lines available on display screen **105** and so the user must scroll the screen display to view the complete screen.

Thus, to view the additional items, the user presses a first screen scroll key, e.g., a next key, on cellular telephone **100**. In this embodiment, when the first screen scroll key is pressed, each line of the display is rolled up one line. The resulting display has an icon with a finger pointing up (not shown) if the menu requires only two screen displays. If the menu requires more than two screen displays, the second screen display of the menu would have two icons, one with a finger pointing up, and another with a finger pointing down. To scroll between the various lines in the second menu, the user uses the first screen scroll key, and a second screen scroll key.

If the user displays the last line of a card, e.g., the last line in the second menu, and presses the first screen scroll key nothing happens. In this embodiment, the user must make a choice before the next card is available.

Screen display **202** also includes representations of two soft keys, a home key **204**, and an info key **205**. In this example, these soft keys are defined only for the card used to generate screen display **202**. When the user presses a predetermined key sequence, the home key is highlighted to indicate the selection. In this embodiment, when the home key is selected, the user is returned to screen display **200**. In another embodiment, the user could be returned, for example, to a home screen display that is displayed each time the user activates cellular telephone **100** for use on airnet network **150**.

The home key is associated with a pointer, that in one embodiment is a resource locator, and the card addressed by the pointer is displayed by the client process when the home key is selected by the user. Specifically, if the pointer is to a card in the current deck, the client process simply displays that card. If the pointer is to other than a card in the current deck, the client process in cellular telephone **100** retrieves the deck containing the card at the location identified by the pointer. The location could be, for example, either a memory in cellular telephone **100**, or a memory in computer **121**.

Similarly, when the user presses another predetermined key sequence, the info key is highlighted to indicate the selection. In this embodiment, when the info key is selected, a help screen is displayed for the user that describes the possible selections. The particular contents of the help screen are determined by the provider of the service. Specifically, a pointer is associated with the info key and when the info key is depressed by the user, the information stored at the location identified by the pointer is retrieved and interpreted by the client process in cellular telephone **100**.

Returning to the menu in FIG. **2**C, since the user wants to determine the status of an order, the user pushes the two key on the keypad of cellular telephone **100**. In response to the key press, the second choice in the menu is highlighted as shown in FIG. **2**C. In response to verification of the key press, e.g., the user presses a predetermined key sequence, cellular telephone **100** transmits a check open order request to computer **121**, i.e, the client process transmits a message that includes a resource locator associated with the menu item selected by pressing the two key.

In response to the check open order request, computer **121** transmits yet another card deck to cellular telephone **100**. The client process in cellular telephone **100** interprets this deck, that is an entry card, and in turn generates a purchase order number entry screen display **206** (FIG. **2**D) on display screen **105**. Notice that screen display **206** has a previous soft key **207** and a fax soft key **208**. Again, each of these soft keys has an associated pointer and the information stored at the location identified by the pointer is retrieved and interpreted by the client process when the user selects the soft key.

In this example, the user does not select a soft key, but rather the user enters the purchase order number as shown in FIG. **2**E using the keypad of cellular telephone **100**. The user enters only the various numbers. The client process formats the number and inserts the dashes as shown in FIG. **2**E.

After the purchase order is entered, the user presses a predetermined key sequence to indicate to the client process that entry of the purchase order number is complete. Notice that the user is entering data and not simply selecting a menu item. The user is utilizing cellular telephone **100** as if cellular telephone **100** was a computer connected to network **120**, but, as explained more completely below, cellular telephone **100** is similar to a standard digital data capable cellular telephone that communicates over data capable cellular telephone network **110**. Specifically, cellular telephone **100** is not a combination of a computer module and a wireless communication module as in prior art attempts to create an intelligent telephone.

In addition, the user enters data using only the standard cellular telephone keypad. Thus, cellular telephone **100** eliminates the need for a computer keyboard or for a sophisticated touch screen that recognizes motion of a pointing object. This is important to maintaining the size, weight, and power requirements of cellular telephone **100** similar to those of a voice-only cellular telephone. In one embodiment, to facilitate data entry, as explained more completely below, cellular telephone **100** includes a text prediction process that reduces the number of key strokes required to enter text data. In this embodiment, the text prediction process is turned on or off for each entry card.

In response to entry of the purchase order number, the client process transmits a request to server computer **121** for the particular purchase order. Specifically, the client process appends the entered data to a resource locator and transmits a message containing the resource locator to server computer **121**. Server computer **121**, in response to the message, retrieves the appropriate purchase order and transmits the purchase order as a card deck to the client process in cellular telephone **100** over airnet network **150**.

The client process interprets the card deck and generates a screen display **209** (FIG. **2**F). Initially, fax key **208** is not highlighted in screen display **209**.

Notice that screen display **209** includes multi-display screen card indicator **203** to show the user that the purchase order screen contains more information that can be displayed at one time on display screen **105**.

After the user reviews the purchase order, the user presses the key sequence for fax key **208** and in response, fax key **208** is highlighted as illustrated in FIG. **2**F.

In response to selection of fax key **208**, the client process retrieves the card deck at the location identified by the pointer associated with fax key **208**. If the location is on server computer **121**, the client process transmits a message including a resource locator to server computer **121** and in response to the message, server computer **121** transmits back yet another card deck. If the location is on a server computer other than server computer **121**, the client process transmits a message including a resource locator to that server computer and in response to the message, that server computer transmits back yet another card deck. If the location identified by the pointer is within cellular telephone **100**, the client process simply retrieves the deck. In either case, fax form **210** (FIG. **2**G), that is an entry card, is displayed on display screen **105** by cellular telephone **100**. This example demonstrates the information accessed by the client process can be located in any number of locations. The resource locator associated with the fax key identifies the appropriate location.

When fax form **210** is displayed, the user enters the facsimile machine telephone number at ABC Designs, as shown in FIG. **2**H, using the cellular telephone keypad. In this embodiment, the telephone number is automatically formatted by the client process. After the telephone number is entered, the client process appends the telephone number to a resource locator and transmits the information to server computer **121**.

When server computer **121** receives the information, server computer **121** executes a common gateway interface application (CGI) pointed to by the resource locator. The CGI application grabs the necessary information and transmits the information via e-mail to a fax gateway. The fax gateway, upon receipt of the e-mail, converts the information to a fax and sends the information to the specified telephone number. Thus, cellular telephone **100** requires neither a printer connection nor a print driver, but yet can print using the facsimile machine at ABC Designs.

As illustrated in this example, cellular telephone **100** transmitted a request for a particular purchase order, and scheduled transmission of data responsive to the request to a local machine capable of printing the data. Thus, the processes of this invention, as described more completely below, in cellular telephone **100** in combination with data capable cellular telephone network **110** and server computer **121** permit cellular telephone **100** to effectively utilize an application on server computer **121** on network **120** even though cellular telephone **100** utilizes only a microcontroller found in telephone **100** and does not required a separate computer module as in the prior art.

In addition, the client process using the information transmitted from server computer **121**, i.e, the cards, generates a wide-variety of user interfaces as illustrated in FIGS. **2**A to **2**H. The particular configuration of the various user interfaces is defined by the cards transmitted in a card deck. Consequently, the user interface is not fixed to one particular format such as an E-mail type format, but rather the format is variable and can be redefined by each card that is interpreted by the client process. Also, in general, the user interface for one application on a server computer is independent from the user interface for another application on that server computer.

Specifically, the application accessed on server computer **121** generates the card deck and so in turn defines each of the various user interfaces. Each user interface permits the user to identify a particular selection. Each particular selection could result in generation of a different user interface with different selections. Thus, the user interfaces are limited only by the applications accessible to the two-way data communication device.

As shown below, a wide variety of applications can be provided on a server computer. Despite the robustness of the client module in interpreting a wide variety of application, typically, the client process is lightweight and thus requires only lightweight resources, e.g., 60 Kbytes of read-only memory (ROM) for the client module, 10 Kbytes of random access memory (RAM), and less than one million instructions per second (MIPS) of processing power. Since the client process needs only these lightweight resources in a two-way data communication device, the client can use existing resources in such a device and therefore does not add to the cost of the two-way data communication device such as data capable cellular telephone **100**.

In another embodiment, the user can configure cellular telephone **100** to access server computer **131** on corporate local area network **130**. In response to the access by the user, computer **131** transmits a home card (not shown) to cellular telephone **100** which in turn generates a home screen display on display screen **105**.

When the user selects personal information on the home screen display or on a subsequent screen display associated with the home card, a message including a resource locator for a personal information deck is transmitted from cellular telephone **100** to computer **131**. In response to the message, computer **131** transmits a card deck that includes a display card and a choice card to cellular telephone **100**. In these examples, the card deck is described as including one of three cards, a display card, a choice card, and an entry card. However, these examples are illustrative only, and are not intended to limit the invention to those particular embodiments of cards. In view of this disclosure, those skilled in the art will be able to form combinations of these types of cards and define other types of cards, if such cards are appropriate for the particular application.

The client process in cellular telephone **100** interprets the display card that includes image and text data and generates screen display **300** on display screen **105** (FIG. **3**A). Screen display **300** includes a home key **301**, and an info key **302**. When the user selects home key **301**, the user is returned to the home screen. Info key **302** functions in a manner similar to that described above for info key **205**.

When the user presses a predetermined key, the client process interprets the choice card and a second screen display **304** (FIG. **3**B) is driven on display screen **105**. Screen display **304** is a menu of the personal information that is stored on server computer **131** for use by the user of cellular telephone **100**. Multi-display screen card indicator **203**, e.g., the hand with a finger pointing down, illustrates to the user that the list has additional items that appear on the next screen display. Screen display **304** also indicates the number of E-mail messages, faxes, and voice messages waiting for the user.

The user scrolls the screen display line by line until screen display **305** is on display screen **105**. Initially, the fourth item in the menu is not highlighted. In this example, the user presses the four key on the keypad of cellular telephone **100**

to view the user's schedule. In response to the key press, the client module in cellular telephone **100** transmits a message, including a resource locator associated with the menu item selected by pressing the four key, to server computer **131** using data capable cellular telephone network **110** and corporate local area network **130**.

In response to the message, server computer **131** executes the application identified in the resource locator. Upon completion of the execution, server computer **131** transmits, over corporate local area network **130** and data capable cellular telephone network **110** to cellular telephone **100**, a card deck that includes a choice card that describes the user's schedule for that day.

In this embodiment, when server computer **131** completes the transmission, server computer **131** has completed the response to the message and has transmitted all necessary information to cellular telephone **100**. Therefore, server computer **131** does not retain any state information concerning the transmitted information and so is referred to as a stateless server computer **131**. In this embodiment, the client process can only request a card deck. However, as demonstrated herein, card decks and the two-way interactive data communication system of this invention provide the user with a new level of capability.

When cellular telephone **100** receives the card deck, the client process in cellular telephone **100** interprets the choice card and drives screen display **306** (FIG. **3**D) on display screen **105**. Initially, the first item in the menu of screen display **306** is not highlighted. When the user depresses the one key on the keypad of cellular telephone **100**, cellular telephone **100** highlights the first item in the menu. Cellular telephone **100** generates screen display **308** (FIG. **3**E) upon the user subsequently depressing a predetermined key. Screen display **308** includes a schedule key **309**, that when selected returns the user to screen display **306** (FIG. **3**D). Screen display **308** also includes a more detailed description of the 10:00 a.m. meeting.

While screen display **308** is active, if the user depresses a predetermined key, the user is presented with the options in screen display **310** (FIG. **3**F). Initially, item two in screen display **310** is not highlighted.

In this example, the user depresses key two on the keypad of cellular telephone **100** and so cellular telephone **100** sends a message including a resource locator to server computer **131** to send an E-mail message to Bill Smith confirming the meeting at 10:00 a.m. When server computer **131** executes the application addressed by the resource locator, an E-mail message is sent.

In another example, the user of cellular telephone **100** connects to Internet service provider computer **141** on Internet **140** using data capable cellular telephone network **110**. Upon connection of cellular telephone **100**, service provider **141** transmits to cellular telephone **100** a card deck to generate FIGS. **4**A to **4**C.

The client process in cellular telephone **100** interprets the first card in the card deck from computer **141** and generates screen display **400** (FIG. **4**A). When the user presses a predetermined key, cellular telephone **100** displays screen display **401** (FIG. **4**B). Screen display **401** provides the user with a series of choices that group services alphabetically.

When the user depresses the seven key on the keypad of cellular telephone **100**, cellular telephone **100** displays a list of the services that have letters P, R, or S as the first letter in the service name. In this embodiment, screen displays **401** and **402** are a single card, e.g., a single screen. Each of the various services associated with a key has an index and when a particular choice is made by the user, the choice defines an index. The client process then displays all of the services with the index that corresponds to the index defined by the user's choice.

In screen display **402**, the user is given a series of choices of services that are available to the user under tab seven. Initially, item three in screen display **402** is not highlighted. In this example, the user depresses the three key on the keypad of cellular telephone **100** to select the stock quotes and item three in screen display **402** is highlighted.

In response to this selection, cellular telephone **100** transmits a request for a stock quote, i.e, a message including a resource locator, over cellular telephone network **100** and internet **140** to service provider **141**. In response to the request, service provider computer **141** executes the application addressed by the resource locator. The application retrieves a card deck that, in turn is transmitted to cellular telephone **100**. The card deck includes a display card and an entry card.

Upon receiving the card deck, the client process in cellular telephone **100** interprets the display card and generates screen display **403** (FIG. **4**D). When the user depresses a predetermined key, entry screen display **406** (FIG. **4**E) is generated on display screen **105** of cellular telephone **100**.

Initially, the box with letters SUNW in screen display **406** is empty. The letters SUNW are entered in the box by the user to indicate the ticker symbol of the stock for which the user wants information. After the user has entered the stock ticker symbol, the user presses the predetermined key to indicate that the entry is complete.

In response to the entry by the user, the client module appends the stock ticker symbol to the resource locator and transmits the resource locator to service provider computer **141** which, in turn, executes an application addressed by the resource locator to retrieve the latest stock market information for the stock ticker symbol. Service provider **141** uses the retrieved information to generate a card deck that contains the information and then transmits the card deck to cellular telephone **100**.

The client process in cellular telephone **100** interprets the first card in the deck and generates screen display **409** (FIG. **4**F). For convenience, the FIGS. **4**F to **4**I are grouped together and separated by a dotted line. However, at any given time, in this embodiment, display screen **105** can display any four adjacent lines and so the grouping of lines in FIGS. **4**F to **4**I is for convenience only to demonstrate the level of information that can be retrieved and displayed by the client process. The use of a four line display screen is illustrative only. The client process of this invention can work with any size display screen, even a one line display screen. However, a multi-line display screen is preferred.

In the Figures discussed above, the display screen is a pixel display and so can display images. In another embodiment, the display screen only displays text and is smaller in size. For such an embodiment, the various entries are abbreviated and only text is displayed, but the general operation is identical to that just described. Also, the various computer networks can be interlinked so that a user with access to one computer network can obtain information on another computer network. Moreover, the embodiments described above are merely illustrative. One important aspect of this invention is that cellular telephone **100** can interact with any type of server application that is configured to communicate with and interact with the client process in cellular telephone **100**. Thus, the user is no longer limited to only a few services offered by a telephone network provider.

In FIG. **1**, the cellular telephone user must address, i.e., connect to, each computer of interest to access the different services. Consequently, each computer requires the information necessary to communicate with cellular telephone **100**. In another embodiment, not illustrated, cellular telephone **100** contacts a single central computer over data capable cellular telephone network **110**. This computer is connected to each of the other networks illustrated in FIG. **1**. Consequently, the user of cellular telephone **100** sends a message including a resource locator to the central computer, the central computer processes the message and retrieves the information addressed by the resource locator from the appropriate network shown in FIG. **1**. After the requested information is retrieved, the central computer generates a card deck and transmits the card deck to cellular telephone **100**. In this embodiment, only one computer must be configured to communicate with cellular telephone **100**. However, that same computer must be configured to communicate with all other computer networks that are of interest to the user of cellular telephone **100**.

Hence, according to the principles of this invention, the client process on a two-way data communication device can initiate an interaction with a particular server computer. The server computer transmits (i) information to the client process to generate a user interface, and (ii) a resource locator for each possible selection by the user from the user interface. The resource locators can address applications on the server computer, applications on over server computers, or an application on the server computer that in turn accesses other server computers. Consequently, the user of a two-way data communication device is limited only by the applications provided on the server computers.

Further, the user can be provided new and/or updated capabilities by modifying the applications on the server computers. There is no requirement that the client process be changed for a new or updated application. The client process must only interpret the information received from an application and transmit a message for additional information. These operations are unaffected by a new or updated application. Consequently, as noted above, this invention does not require distribution of application updates or new applications to the end user of the two-way data communication device.

FIG. **5** is an illustration of another embodiment of airnet network **150**. In this embodiment, the messages from a two-way data communication device, e.g., devices **100**, **101**, and **102** are directed to an airnet network translator **500**. Airnet network translator **500** and a particular two-way data communication device, e.g., any one of devices **100**, **101**, and **102** communicate using the protocol for point-to-point communication on the particular network linking airnet network translator **500** and that two-way data communication device. For example, if data capable cellular telephone network **110** is a cellular digital packet data network, either the transmission control protocol (TCP) or the user datagram protocol (UDP) can be used.

Airnet network translator **500** transfers data between the two-way data communication device and the selected computer network after translator **500** validates the communication path, as explained more completely below, and encrypts the message transferred to the computer network if necessary. In addition, airnet network translator **500** collects transaction and billing information concerning the communication between the two-way data communication device and the designated computer network. Specifically, airnet network translator **500** provides access control for paying services and a logging mechanism for billing. Airnet network translator **500** can also provide a directory service to users.

FIG. **6** is a block diagram of a typical GSM digital cellular telephone. Each of the hardware components in cellular telephone **600** is known to those skilled in the art and so the hardware components are not described in detail herein. The compiled and linked processes of this invention are stored in ROM **601** as a client module **602** and support modules **603**. Upon activation of a predetermined key sequence utilizing the keypad, physical layer processor **610**, that is sometimes referred to herein as a microcontroller, initiates a client process using client module **602** in ROM **601**.

In this embodiment, client module **602** includes a plurality of manager modules, as explained more completely below. The particular manager modules utilized is determined by the characteristics of the particular cellular telephone **100** in which client module **602** is implemented. Client module **602** must include manager modules to interface with modules that control the particular hardware in cellular telephone **100**, a manager module to interface with the particular cellular telephone network protocol used by cellular telephone **100**, and a manager module to interpret the card decks received. Therefore, the particular manager modules described herein are only illustrative of the principles of this invention and are not intended to limit the invention to the specific modules described more completely below.

In this embodiment, the client process controls the operations of a plurality of cellular telephone dependent support processes that are stored in ROM **601** such as a display module, a keypad module, and a network and terminal control module, that were referred to above collectively as support modules **603**. The combination of the client process, display process, keypad process, and network and terminal control process are considered foreground tasks by the microkernel in cellular telephone **600**. Also, herein module and process are used interchangeably, but those skilled in the art will appreciate that the module is the computer software as stored in a memory, preferably, a ROM, of cellular telephone **600** and the corresponding process is the execution of the module by the microcontroller in cellular telephone **600**. Again, note that this invention does not require a separate processor and instead can utilize the processing power that already exists in cellular telephone **600**, because as described above, the client process of this invention is so lightweight.

The user interface for cellular telephone **600** determines the version of the user interface manager module that is stored in ROM **601**. In one embodiment, the parameters used to define the user interface level are the display resolution, the pixel access of the display, and the support of soft keys. One definition of the user interface levels is given in Table 1.

TABLE 1

USER INTERFACE LEVEL DEFINITIONS	
Level 1	Text only; 1 or more lines; 12 to 15 characters per line; and no soft keys.
Level 2	Text only; 4 or more lines; 20 to 25 characters per line; and soft keys.
Level 3	Pixel access; 150 by 75 pixels or larger; and soft keys.

The user interface manager module presents data to the display module which in turn drives display screen **605**; and captures data entered by the user on display screen **605**. In

response to this information, the client process prepares a message for transmission by a network manager module.

To more completely explain the operations performed over airnet network **150**, FIG. **7** is a block diagram that illustrates the various components in one embodiment of this invention of cellular telephone **700**. Those skilled in the art will appreciate that cellular telephone **700** includes circuitry and software similar to that illustrated in cellular telephone **600** for voice and data operations supported by cellular telephone **700** in addition to the modules for operation on airnet network **750**. Similarly, server computer **743** includes other software and hardware that is known to those skilled in the art and so is not illustrated in FIG. **7** for clarity.

In this embodiment, client module **702** in digital cellular telephone **700**, that is executing on the microcontroller of telephone **700**, communicates with server computer **743** over cellular digital packet data (CDPD) network **710**. Cellular digital packet data network **710** is used to illustrate one embodiment of this invention on one two-way data communication network. The principles of this invention can be used with a wide variety of two-way data communication networks. For example other two-way data communication networks for cellular telephones that may be used include TDMA, CDMA, and GSM circuit switched data networks; and the AMPS analog cellular network with a modem. Similarly, for two-way pagers, two-way data communication networks include PACT, or other priority two-way paging networks with data transport capability.

Prior to considering the operation of this configuration of airnet network **750** in more detail, another aspect of this invention is required. Specifically, a technique is required for conveying instructions from digital cellular telephone **700** to a server application on server computer **743**, and conversely.

A telephone interaction description language (PIDL) is defined for use by service developers. A terminal interaction language (TIL) is a distillation of the telephone interaction description language and describes the same interaction to digital cellular telephone **700** as the telephone interaction description language describes to computer **743**.

With the exceptions described more completely below, a process in the terminal interaction language is a compressed version of the same process written in the telephone interaction description language. The terminal interaction language allows easy parsing on the two-way data communication device, which in turn makes the client smaller than a client for the telephone interaction description language that is readable by humans, but is not optimized for parsing by a machine.

The compression from the telephone interaction description language to the terminal interaction description language is done typically at run time because some cards are computed cards and so cannot be precompiled. A wide variety of techniques can be used to convert the telephone interaction description language to terminal interaction language. The important aspect is that, if bandwidth across the cellular telephone network is limited, a compressed form of the telephone interaction description language is used.

Preferably, each data type is compressed to facilitate optimal transfer over the two-way data communication network. For example, the verbs in the telephone interaction description language are compressed using a binary tokenization. Graphics are compressed using run length limited compression and text is compressed using any one of the well-known techniques for text compression. While compression of the telephone interaction description language is not required to implement this invention, compression makes the invention more efficient by utilizing the bandwidth of the network more effectively.

Instructions in the telephone interaction description language and in the terminal interaction language are grouped into a deck and a card. Each deck includes one or more cards. A card includes the information, i.e., a set of telephone interaction description language, required to generate a screen. As indicated above, a screen can be larger than the number of lines in a display screen. Other equivalent terms for a card include a page and an atomic interaction. Thus, a card deck is simply a group of screens. The number of cards in a card deck is selected to facilitate efficient use of the resources in the two-way data communication device and in the airnet network.

For simplicity, in this embodiment, each card is a single operation. Herein, an operation is defined as a related set of actions such that the user does not encounter an unanticipated delay in moving from one action to the next, i.e, the user does not have to wait for client module **702** to retrieve another card deck from computer **743**. Also, a deck may include definitions of soft keys that stay in force while the deck is active, i.e, being executed by the cellular telephone microcontroller.

Computer **743** may contain stored static telephone interaction description language decks. Computer **743** also generates telephone interaction description language decks in response to data from, or choices made by, the user of cellular telephone **700**.

In the embodiment shown in FIG. **7**, computer **743** converts a telephone interaction description language deck to a terminal interaction language deck, that in turn is transmitted to cellular telephone **700**. The terminal interaction language is designed so that decks can be stored unaltered in memory **716** of cellular telephone **700** and referenced directly with little or no parsing. While telephone interaction description language decks on computer **743** may contain references to images, a terminal interaction language deck contains the images at the end of the deck. Thus, if a particular two-way data communication device does not support display of images, the images are easily stripped from the terminal interaction language deck before the deck is transmitted to that particular two-way data communication device.

As indicated above, each interaction with the user of cellular telephone **700** is described by a deck or a series of decks Logically, the user retrieves a terminal interaction language deck stored in a memory **716** of cellular telephone **700** after receipt from computer **743** over CDPD network **710**. The user reviews the information displayed by cards in the deck and makes choices and/or enters requested information and then requests another deck, as described above with respect to FIGS. **2**A to **2**H, for example.

When the user receives a deck, the first card of information is displayed on display screen **705**. Typically, as shown above, the first card is text, an image, or a combination of an image and text. After the user has reviewed the first card, the user hits a NEXT key to view the next card in the deck. Similarly, a user can return to a previous card in the deck by using a PREV key. Thus, using the NEXT and PREV keys, the user can navigate back and forth through the deck. Within a card, the user uses a scroll key or keys to move the portion of the card displayed up and down. This description of a particular method used to navigate through a deck and within a card is not intended to limit the invention to this particular method. In view of this disclosure, those skilled in

the art will be able to use a wide variety of ways to navigate through a deck and within a card.

Cards, in this embodiment, are one of three types, a display card, a choice card, and an entry card. Independent of the type of card, the card can contain text and images. In addition, the invention is not limited to these three particular types of cards. The definition of the three particular types of cards is used to facilitate a description of the invention and to assist the developer's in organizing applications.

A display card gives information to the user to read. The display content can include any one of, or any combination of text, an image, and a soft key. The soft key is in effect only while the display card is active.

A choice card displays a list of choices for the user. The choices are automatically presented in a format specified on the choice card. See Appendix I, which is a part of the present disclosure and is incorporated herein by reference in its entirety. As explained above, the user makes a choice by depressing the key corresponding to the choice.

An entry card is used to obtain input data from the user. An entry card displays one or more entry lines. Typically, each entry line includes a display followed by an entry line. The entry line, in this embodiment, can be for either numeric or text data.

In this embodiment, choice and entry cards prevent the user from moving to the next card until the user has entered the requested information. When the user reaches the last card in a deck and hits the NEXT key, a request for a new deck is initiated. The deck requested is determined by either the deck that the user has completed, or by the choices made by the user. Also, when the deck is completed, the choices and/or data entered by the user typically are transmitted along with the request for the new deck to computer **743**.

Appendix I is one embodiment of a syntax for the telephone interaction description language and the terminal interaction language of this invention. In one embodiment, the telephone interaction description language is described using a subset of the standard generalized markup language. Only a subset of the standard generalized markup language is utilized so that telephone interaction description language parsers also can be written easily using simple tools like lex and yacc.

Returning to operation over airnet network **750**, cellular telephone **700** includes a display module **712**, a keyboard module **711**, a client module **702**, and a UDP interface module **714**. In this embodiment, module **702** is stored in a non-volatile memory (not shown) of telephone **700** and is executed by the microcontroller (not shown) in telephone **700**. Modules **711**, **712**, and **714** operate under the control of client module **702**.

Client module **702** includes instructions that direct the microcontroller in cellular telephone **700** to perform the operations described more completely below with respect to FIGS. **8**A to **8**D. The operations include sending uniform resource locator (URL) requests to HyperText Transfer Protocol (HTTP) server **749**, parsing and displaying a TIL deck or decks returned by HTTP server **749**, and generating new URLs based on the user's key presses. For a description of HTTP server software and platforms that can run the HTTP server software, see, for example, Ian S. Graham, *The HTML Sourcebook*, John Wiley & Sons, Inc., New York, Chapt. 8, (1995), which is incorporated herein by reference.

User datagram protocol (UDP) interface module **714** couples CDPD network **710** to client module **702**, and allows client module **702** to communicate using UDP over CDPD network **710**. The user datagram protocol is well known to those skilled in the art and is documented extensively. UDP interface module **714** supports transmission of simple stand-alone messages between the connection partners.

Display module **712** is a display driver that couples client module **702** to display screen **705** and so allows client module **702** to specify the information presented on display screen **705**. The user interface manager module within client module **702** converts the display information in a card to instructions for display module **704** which in turn provides signals that drive the hardware that controls the operation of display screen **705**. For example, if the TIL deck includes an image, the user interface manager module determines whether the active card calls for display of the image. If the active card directs the user interface manager module to display the image, the user interface manager module passes the image in memory **716** to display module **712**, which in turn displays the image on display screen **705**.

Keyboard module **705** couples keypad **715** to client module **702**, and stores data representing keys pressed by the user on physical keypad **715** in memory **716**. Keyboard module **705** notifies client module **702** when the user has pressed a key.

When client module **702** is notified of a key press, the user interface manager module within client module **702** passes information about the key press to display module **712** that in turn displays the appropriate character on display screen **705**, if an entry card is active. If the user interface manager module determines that a choice card is active, and the key press corresponds to one of the choices, the user interface manager module sends instructions to display module **712** that result in the choice being identified for the user, e.g., highlighted as described above.

In addition to HTTP server **749**, host computer **743** includes a UDP interface module **748**, CGI programs **761** stored in a memory **755** of host computer **743**, and TIL decks **760** stored in memory **755**.

HTTP server **749** uses UDP interface module **748** to send data to and receive data from CDPD network **710**. TIL decks **760** are TIL decks that can be accessed by HTTP server **749**. Static files containing PIDL decks are converted to TIL decks only once on HTTP server **749**. CGI programs **761** are common gateway interface programs that produce PIDL decks that are used by HTTP server **749** to produce TIL decks that in turn are transmitted via UDP interface modules **748** and **714** and cellular telephone network **710** to client module **702**. In this embodiment, the services available over airnet network **750** are applications accessible by HTTP server **749** on Internet **140** for which a service developer has written a PIDL deck, or a CGI script that in turn generates a PIDL deck, and is stored on computer **743**.

The architecture in FIG. **7** demonstrates some important aspects of this invention. First, the applications, the PIDL decks and CGI scripts in this embodiment, are independent of the particular two-way data communication network. For HTTP server **749** to communicate over a different two-way data communication network that does not support UDP, only UDP interface module **748** must be changed. The applications are unaffected by such a change.

Second, the applications on HTTP server **749** are independent of the two-way data communication device with which HTTP server **749** is interacting. An application on HTTP server **749** can communicate with any two-way data communication device that includes the appropriate client and a module to transmit and receive data over the two-way data communication network. These two facts mean that an

investment in developing an application is insulated from either advances in two-way data communication devices, or advances in two-way data communication network technology.

FIGS. **8**A to **8**D are a process flow diagram for one embodiment of this invention. Initially, when the user initiates communication over airnet network **750**, client module **702** initializes a work space in memory **716** of cellular telephone **700** and then, in get home URL process **801**, stores a URL in the work space. According to the principles of this invention, in one embodiment, each cellular telephone that utilizes the airnet network has a home URL stored in a non-volatile memory that is used to retrieve a home card deck for the cellular telephone. In another embodiment, the cellular telephone obtains the home URL from server **749**. Thus, in get home URL process **801**, client module **702** obtains the home URL. Herein, a URL is an example of a specific embodiment of a resource locator.

For example, in get home URL process **801**, client module **702** obtains a home URL, such as

http://www.libris.com/airnet/home.cgi

and stores the home URL in the work space. The portion of the home URL, http:/www.libris.com, identifies a particular HTTP server, i.e, server **749**, on the world-wide web. The portion of the URL, /airnet/home.cgi, specifies a particular common gateway interface program within CGI programs **761**. The use of a URL pointing to a server on the world-wide web is illustrative only is not intended to limit the invention to applications on the world-wide web. In general, cellular telephone **700** obtains an identifier, i.e, a resource locator, of a home application on a home server that is executed by the server when the cellular telephone initially becomes active on airnet network **750**, and stores the resource locator in the work space.

Next in create HTTP request process **802**, client module **702** converts the URL in the work space to a HTTP request. For example, for the above URL, create HTTP request process **802** generates a method field, such as

GET/airnet/home.cgi HTTP/1.0

The GET method is part of HTTP. Thus, the format for the GET method is known to those skilled in the art. Also, this particular form of the method is used because a specific server connection is established by cellular telephone **700** and so identification of the server is unnecessary. Nevertheless, briefly, this command instructs server **749** to execute application home.cgi and execution of application home.cgi in turn results in generation of a home deck and a subsequent transmission of the home deck to cellular telephone **700**. HTTP/1.0 specifies the HTTP version used by client module **702** in cellular telephone **700**.

In addition to the method field, client module **702** in process **802** could also generate appropriate HTTP request fields to pass information to server **749** about the capabilities of client module **702**. The request fields can include information such as lists of the MIME content-types acceptable to the client; lists of data encoding types acceptable to the client; user authentication and encryption scheme information for the server; the length in bytes of the message being sent to the server; and the Internet mail address of the user accessing the server. This list of information is illustrative only and is not intended to limit the invention to the particular request fields described herein. Any request field defined by HTTP can be utilized by client module **702**. However, in this embodiment, the defaults are utilized and so no HTTP request fields are generated.

Typical HTTP methods that can be generated in HTTP request process **802** are a GET method for requesting either a TIL deck from server **749**, or execution of a common gateway interface program on server **749**; and a GET method request to a common gateway interface program with data, e.g., a query string appended to the URL. In either case, a URL is transmitted to server **749** within the particular message. After create HTTP request process **802** is complete, client process transfers to transmit request process **804**.

However, if the transmission control protocol is used instead of UDP, client module **702** would access a TCP module in establish server connection process **803** that replaced UDP module **714**. Since, in this embodiment, UDP is used, establish connection process **803** is enclosed by a dashed line in FIG. **8**A to indicate that this process is unnecessary when using UDP.

In establish server connection process **803**, a virtual connection would be made over CDPD network **710** between TCP interface module **714** and a TCP interface module in HTTP server **749** so that data could be transmitted between cellular telephone **700** and computer **743** using TCP, e.g., buffers to support data exchange are defined. The establishment of a TCP connection is well-known and so is not described further.

In FIG. **8**A, a dashed line connects establish server connection process **803** with establish client connection process **860**, that is also dashed, that is performed by HTTP server **749**. This indicates that both client module **702** and server **749** are required to complete process **803**.

When the TCP virtual connection is established, client module **702** transfers processing from establish server connection process **803** to transmit request process **804**. Similarly, server **749** transfers to request received check **861**, in which server **749** waits until a request is received. Establish client connection process **860** is not needed for UDP and so HTTP server **749** initiates processing in request received check process **861**. Process **860** is enclosed within a dashed line box to indicate that the process is used only for TCP.

In transmit request process **804**, the HTTP request is sent from the work area in telephone **700** to HTTP server **749**. Again, a dashed line connects process **804** of client module **702** to request received check **861** that is performed by HTTP server **749** to indicate that the check is dependent upon information from client module **702**. When the transmission of the request is complete, client module **702** transfers to response received check **806**.

Upon receipt and storage of the HTTP request, request received check **861** transfers to service request process **862** in which HTTP server **749** initiates service of the received request. In service request process **862**, if the HTTP request only seeks transfer of a static deck, HTTP server **749** retrieves the requested static deck from TIL decks **760**. Conversely, if the request requires server **749** to obtain data from the Internet or to append data to a particular file, server **749** launches the common gateway interface application addressed in the request, and passes the data in the HTTP request to this application for further processing.

For example, if the user of cellular telephone **700** requested a fax as in FIG. **2**F, the HTTP request identifies a common gateway interface application in CGI programs **761** that accepts as input data the telephone number and grabs the information to be faxed. The CGI application generates an e-mail transmission to the fax gateway. Similarly, for a stock quote, server **749**, in response to the HTTP request, launches a common gateway interface application that sends out a

stock query over Internet **140** to a stock quote service provider using the ticker tape symbol passed as input data by server **749** to the common gateway interface application. When the response to the stock query is received, the common gateway interface application builds a PIDL deck that includes the data in the response to the stock query.

Upon completion of servicing the request, HTTP server **749** converts the PIDL deck to a TIL deck and returns the TIL deck to client module **702** using UDP in transfer response process **863**, that is connected by a dotted line to response received check **806** in client module **702**. As the TIL deck is transferred, client module **702** stores the deck in memory **716**.

After the TIL deck is transferred, HTTP server **749** closes the process for responding to the message from cellular telephone **700**. All the information needed by client module **702** to generate a user interface on display screen **705** and for responding to any selection or data entry presented in the user interface is included in the TIL deck. Consequently, client module **702** only has to interpret the TIL deck and interpret the user input to transmit the next message to HTTP server **749**. The state for the HTTP server is defined in the next message. Consequently, HTTP server **749** is stateless because HTTP server **749** does not retain state information concerning a response to a message after the message is transmitted.

However, in another embodiment (not shown), a server could retain state information concerning each interaction with a client module. For example, if the server transmitted a choice card to the client module, the server would retain state information indicating that a choice was pending from the client module. In this embodiment, when the user makes a choice, e.g., depresses key two to indicate choice two, the choice is transmitted to the server which in turn accesses the URL associated with choice two. If this URL addresses another application, the server executes that application. Thus, in this embodiment, the server retains state information concerning each interaction with a client module. In view of this disclosure, those skilled in the art can implement the principles of this invention utilizing a server that retains state information when such a client/server combination is advantageous.

Returning to the present embodiment, when the TIL deck is received, client module **702** leaves response received check process **806** and transfers to process first card **808**. However, if TCP is used instead of UDP, client module **702** upon leaving check **806** would close the virtual TCP connection in transmission completed process **807**. Upon closing the virtual TCP connection, processing would transfer to process first card **808**. Again, transmission complete process **807** is enclosed within a dashed line box to indicate that process **807** is used only with TCP.

In process first card **808**, client module **702** parses the TIL deck and interprets the first card. Processing transfers from process first card **808** to generate display process **809**.

In generate display process **809**, client module **702** passes the data to be displayed in the first card to display module **712**. Display module **712**, in response to the data, drives the text and images in the data on display screen **705**. Generate display process **809** transfers processing to key press check **820** through node **813**. In FIGS. **8**A to **8**D, any circular node with the same alphanumeric character and reference numeral is the same node. The circular nodes are used to establish connections between the various processes in the method of FIGS. **8**A to **8**D without cluttering the figures with a number of connection lines.

Client module **702** waits in key press check **820** for the user to press a key on keypad **715** of cellular telephone **700**. In this embodiment, cellular telephone **700** is assumed to have the capability to support two soft keys, a scroll-up key, a scroll-down key, a previous key, a next key, and keys zero to **9** that are configured in the standard telephone keypad configuration. In view of the following disclosure, if one or more of these keys are not present, one of skill in the art can alter the method for the particular configuration of the cellular telephone keypad, or other two-way data communication device keypad. For example, if the cellular telephone included a home key, the key press processing described more completely below would include a check that detected when the home key was pressed and would in turn transfer to get home URL process **801**.

Briefly, the processes in FIGS. **8**B to **8**C, identify the key pressed by the user, identify the action required, and then transfer to a process that implements the action required. Specifically, when a key on the keypad is pressed, keypad module **711** stores an identifier for the key in work memory **716** and notifies client module **702** of the key press. Upon receipt of the notification from keypad module **711**, client module **702** reads the storage location in work memory **716** to determine the key pressed and transfers processing from key press check **820** to scroll key check **821**.

In scroll key check **821**, client module **702** determines whether the user pressed either of the scroll keys. If a scroll key was pressed, processing transfers to adjust display process **822** and otherwise to display card check **823**.

In adjust display process **822**, client module **702** determines which of the scroll-up or scroll-down keys was pressed. Client module **702** then sends information to display module **712** so that the current display is either scrolled-up one line or scrolled-down one line. If the scroll key would move the display beyond a boundary of the current card, the scroll key press is ignored in adjust display process **822**.

In response to the information from client module **702**, display module **712** adjusts the screen display on display screen **705**. Client module **702** transfers processing from adjust display process **822** to key press check **820** through node **813**.

If a scroll key was not pressed, processing is passed through scroll key check **821** to display card check **823**. Client module **702** takes action that depends on the particular type of card that is currently being displayed on display screen **705**. If the current card is a display card, client module **702** passes through display card check **823** to soft key check **828**, and otherwise transfers to choice card check **824**.

Assuming for the moment that the current card is not a display card, choice card check **824** determines whether the current card is a choice card. If the current card is a choice card, client module **702** passes through choice card check **824** to choice key check **826**, and otherwise transfers to data key check **826**.

Assuming for the moment that the current card is neither a display card nor a choice card, the current card must be an entry card, because in this embodiment only three card types are defined. Thus, client module **702** does not check for an entry card. Rather, data key check **826** determines whether a valid data key was pressed. In this embodiment, the data keys are keys zero to nine on the key pad, and the # key. In other embodiments, other combinations of keys could be defined as data keys. If the pressed key was one of the data keys, data key check **826** transfers to process data entry **827** and otherwise transfers to soft key check **828**.

In process data entry **827**, client module **702** knows whether the predictive text entry process is turned-on, because one of the parameters on the entry card specifies

whether to use the predictive text entry process, as described in Appendix I, which is incorporated herein by reference in its entirety.

If the predictive text entry process is not turned-on, client module **702** in process data entry **827** enters the pressed key value in a text entry buffer in work memory **716** at the appropriate location. Also, client module **702** sends information to display module **712** so the value of the pressed key is displayed in the appropriate location on display screen **705** by display module **712**.

If the predictive text entry process is turned-on, client module **702** uses the novel predictive text entry process in process data entry **827**, as described more completely below with respect to FIGS. **9**, **10**A to **10**T, and **11**, to determine the letter to select from the set of letters associated with the pressed key. After the predictive text entry process determines the appropriate letter, a value representing the letter is stored at the appropriate location in the text buffer in work memory **716**. Also, client module **702** sends information to display module **712** so that the letter is displayed in the appropriate location on display screen **705**. Upon completion of process data entry **827**, client module **702** transfers processing through node **813** to key press check **820**.

The previous description assumed that the current card was an entry card, but if the current card is a choice card, choice card check **824** transferred to choice key check **826**. In generate display process **804** for the choice card, each of the choices are labeled according to information on the choice card and some or all of the choices are displayed on display screen **705**. Thus, choice key check **826** determines whether the pressed key corresponds to one of the choices. If the pressed key is one of the choices, client module **702**, in one embodiment, sends information to display module **712** to indicate the selected choice. Client module **702** also transfers from choice key check **826** through node **831** to store identifier process **850** (FIG. **8**D), that is described more completely below. Conversely, if the pressed key is not one of the choices, choice key check **826** transfers to soft key check **828**.

Soft keys can be specified both for a deck as a whole and per card, i.e., a physical key on the keypad is specified as a soft key as described more completely in Appendix I. Each soft key specification includes an identifier that defines the action to be taken when the soft key is pressed.

When a soft key is specified for a deck, the soft key remains in effect for the entire deck. However, when a soft key is specified for a card, the card soft key specification temporarily overrides the corresponding deck soft key specification, i.e., the deck soft key specification for the same physical key as the card soft key specification, while the card is visible, i.e., displayed on display screen **705**. This override is done independently for the two soft keys. Thus, soft key check **828** transfers processing to first soft key check **829** if the key pressed is one of the two possible physical soft keys. Conversely, soft key check **828** transfers processing to next key check **840** (FIG. **8**C), if neither of the two possible physical soft keys is pressed by the user.

In first soft key check **829**, client module **702** determines whether the pressed key corresponds to the first soft key. If the pressed key is the first soft key, check **829** passes the active identifier for the first soft key to store identifier process **850** through node **831**. Conversely, if the pressed key is not the first soft key, processing transfers from check **829** to second soft key check **830**.

If the pressed key is the second soft key, check **830** passes the active identifier for the second soft key to store identifier process **850** through node **831**. Conversely, if the pressed key is not the second soft key, e.g., a physical key that can be defined as a soft key was pressed but neither the current deck nor the current card defines a soft key for that physical key, processing transfers from check **830** to key press check **820** through node **813**.

When pressing transfers to next key check **840**, client module **702** determines whether the pressed key was the next key. If the next key was pressed, processing transfers to display card check **841** and otherwise to previous key check **846**.

If a display card is the current card, the next key is used to move to another card in a deck, or alternatively to another deck. Thus, display card check **841** transfers processing to last card check **842** when a display card is the current card, and otherwise to entry card check **843**.

Last card check **842** determines whether the current card is the last card in the deck. If the current display card is not the last card in the deck, last card check **842** transfers processing to read next card process **845**, which in turn reads the next card in the deck and transfers through node **812** to generate display process **809**.

If the current display card is the last card in the deck, the deck includes an identifier that specifies the location to transfer to from the last card. This identifier can be a URL to another deck, to a common gateway interface program, or an address for a card within the current deck, for example. Thus, last card check **842** transfers through node **831** to store identifier process **850** when the current display card is the last card in the deck.

If the current card is not a display card but is an entry card, display card check **841** transfers to entry card check **843**. In this embodiment, the next key is the predetermined key used to indicate that all the data for an entry on an entry card has been entered. Thus, if the current card is an entry card, entry card check **843** transfers processing to store data process **844**.

Store data process **844** stores the data entered in at an appropriate location in memory that is specified in the current entry card. Typically, the data is combined as an argument with a URL and stored. Upon completion, store data process **844** transfers through node **810** to create HTTP request process **802** (FIG. **8**A).

When the next key is pressed, if the current card is neither a display card nor an entry card, the current card is a choice card. However, as indicated above, in this embodiment client module **702** requires that the user make a choice and does not allow use of the next key. Consequently, if the current card is not an entry card, entry card check **843** transfers processing through node **813** to key press check **820**.

The previous discussion assumed that the next key was pressed and so next key check **840** transferred processing to display card check **841**. However, if the next key was not pressed, next key check **840** transfers processing to previous key check **846**. If the previous key was pressed, check **846** transfers to first card check **847** and otherwise returns processing to key press check **820**.

First card check **847** determines whether the current card is the first card of a deck. If the current card is not the first card, processing transfers from first card check **847** to read previous card **849**, which in turn reads the previous card and transfers to generate display process **809** through node **813**. Conversely, if the current card is the first card, processing transfers to home deck check **848**.

If the current card is the first card in the home deck, there is not a previous card and so home deck check transfers processing to key press check **820** through node **813** and so

the previous key press is ignored. If the current deck is not the home deck, home deck check **848** retrieves the identifier for the previous deck and transfers through node **831** to store identifier process **850**.

Store identifier process **850** is reached through node **831** from several different points. The operations in store identifier process **850** are the same irrespective of the particular process that transfers to process **850**. In each instance, an identifier is passed to store identifier process **850** and process **850** saves the identifier in working memory **716**. The identifier can be, for example, a pointer to another location in the current card, an address of another card in the current deck, a URL to a deck stored in working memory **716**, a URL to a TIL deck in TIL decks **760** on computer **743**, or perhaps, a URL to a common gateway interface program in CGI programs **761** on computer **743**. Thus, process **800** checks the stored identifier to determine the action required.

Specifically, in identifier to current deck check **851**, client module **702** determines whether the identifier is to a card in the current deck. If the identifier points to the current deck, check **851** transfers processing to retrieve data process **852** and otherwise to URL to local deck check **853**.

In retrieve data process **852**, client module **702** retrieves the information stored at the location indicated by the identifier from working memory **716** and processes the information. Retrieve data process **852** transfers through node **812** to generate display **809** (FIG. **8**A) that was described above.

URL to local deck check **853** determines whether the identifier is a URL to a deck that is stored in working memory **716**, e.g., cached. If the deck is stored locally, check **853** transfers to retrieve local deck **854** which in turn moves the local deck into the storage location for the current deck. Retrieve local deck **854** transfers processing through node **811** to process first card **808** (FIG. **8**A), that was described above.

If the identifier is neither to a location in the current deck, nor to a local deck, the identifier is a URL to an object on computer **743**. Thus, in this case, check **853** returns processing to create HTTP request **802** through node **810**.

Process **800** continues so long as the user continues to enter and process the information provided. In this embodiment, process **800** is terminated, for example, either by the user powering-off cellular telephone **700**, selecting a choice or entry card that discontinues operations of client module **702**, or remaining inactive for a time longer than a time-out period so that client module **702** shuts itself down.

To further illustrate the operations in process **800**, consider the following example which is returned to client module **702** as a TIL deck in response to a HTTP request generated by process **802**. For readability, Table 2 presents the deck in PIDL. In this example, all of the choices are for applications on the same server. However, in another embodiment, each URL could address any desired combination of servers.

TABLE 2

EXAMPLE OF PIDL CHOICE DECK

```
<PIDL>
<CHOICE>
<CE URL=http://www.libris.com/airnet/nnn>News
<CE URL=http://www.libris.com/airnet/www>Weather
<CE URL=http://www.libris.com/airnet/sss>Sports
</CHOICE>
</PIDL>
```

In process first card **808**, client module **702** interprets the information in Table 2 and transfers to generate display process **809**. In generate display process **809**, client module **702** sends information to display module **712** so that the user is presented with a list of three choices on display screen **705**, i.e, a user interface for the choice card is generated:

1. News
2. Weather
3. Sports

Generate display process **809** (FIG. **8**A) transfers to key press check **820** (FIG. **8**B). When the user presses the two key on keypad **715**, key press check **820** transfers through check **821** to display card check **823**.

Since the current card is a choice card, check **823** transfers processing to choice card check **824**, which in turn transfers to choice key check **826**. Since the two key was pressed and that key is a choice key, check **826** transfers processing to store identifier process **850** (FIG. **8**D). In process **850**, client module **702** stores the URL corresponding to two, i.e,

URL=http://www.libris.com/airnet/www

in working memory **716**.

Since this URL is to an object on computer **743**, processing transfers through checks **851** and **853** to create HTTP request process **802**, which in turn generates the request. When the HTTP request is transmitted to server **749**, as described above with respect to process **804**, server **749** in service request process **862** retrieves deck www from TIL decks **760**. An example of the deck is given in Table 3. Again for readability, the deck in present herein in PIDL.

TABLE 3

EXAMPLE OF A SECOND PIDL CHOICE DECK

```
<PIDL>
<CHOICE>
<CE URL=http://www.libris.com/airnet/www-1>World
<CE URL=http://www.libris.com/airnet
                    /www-2>National
<CE URL=http://www.libris.com/airnet/www-3>State
<CE URL=http://www.libris.com/airnet/www-4>Local
</CHOICE>
</PIDL>
```

The deck in Table 3 is transmitted to cellular telephone **700** and stored in memory **716**, as described above with respect to process **806**. The choice card is processed in process **808** and displayed in process **809**. As a result of process **809**, the user is presented with a list of choices:

1. World
2. National
3. State
4. Local.

When the user makes another selection, the same sequence of processes as described above for the first choice card is executed by client module **702**, and another URL is stored that points to a program on server **749** that retrieves the desired weather information and generates a deck with that information. This deck is transferred to cellular telephone **700** and displayed.

As described above, if the current card is an entry card and a key is pressed, client process **702** reaches data key press check **826** (FIG. **8**B). If the pressed key is a valid data key, check **826** transfers to process data entry **827**.

In one embodiment, process data entry **827** uses a novel predictive text entry process for text entry. Recall that on a typical telephone keypad, the keys are labeled with both a number and two or three letters. For example, the two key

is also labeled abc. This leads to some ambiguity when using the telephone keypad to enter text. Is the user attempting to enter an a, b, or c when the two key is pressed?

In one prior art method, two keystrokes were required to enter each letter of text. The first keystroke identified the first key and the second key stroke identified the specific letter desired on the first key. For example, to enter the letter s, the user would first press the seven key that is labeled with letters p, r, and s. Next, the user would press the three key to select the letter s. While this method may work well for short sequences that consist of only three or four letters, the method does not work well for English text. For example, if the user has already entered th and then presses the three key that is labeled with letters d, e, and f, almost always the desired next letter is the letter e. Therefore, making the user press the two key is an extra and unnecessary step.

Client module **702** of this invention utilizes a novel predictive text entry process to reduce the number of key strokes required to enter text using a telephone keypad, or any similar keypad. Using this process, in most cases a single key stroke suffices to enter a single letter.

While this embodiment of the invention is described in terms of a telephone keypad, the principles of the invention are not limited to only a telephone keypad. In general, the process described more completely below, can be extended to any keypad where a single key is used to enter two or more letters. Further, the process is not limited to only letters, but rather is applicable to any keypad where a single key is used to represent two or more characters. In view of the following disclosure, those skilled in the art can use the principles of the predictive text entry process in a wide variety of applications.

The system for predictive text entry includes a predictive text entry module **901** that in this embodiment is included in client module **702**, keyboard module **711**, and a letter frequency table **902** that is loaded into memory **716**, when client module **702** is activated. Predictive text entry module **901** is used in process data entry **827** when specified by the current entry card. Predictive text entry module **901** performs routine buffer management processes, that are known to one of skill in the art and so are not described further to avoid detracting from the process.

Predictive text entry module **901** stores a letter entry for each letter entered in a text buffer **903** in memory **716**. In this embodiment, letters Q and Z are assigned to the one key and the zero key is used to enter a space, period, and comma, i.e., the zero key provides punctuation. However, these assignments are illustrative only, and are not intended to limit the invention to this particular embodiment.

The first letter entered is placed at the left end of the buffer and each additional letter is placed in the left most unused space in buffer **903**. Thus, the last letter entered in text buffer **903** is the right most character. Letter frequency table **902**, sometimes referred to as a table of predictive letter entries, is a look-up table where each entry in the look-table is addressed by three indices. The first two indices represent the two most recently entered letters in text buffer **903** and the third index represents the key that was pressed. Each predictive letter entry stored in letter frequency table **902** defines which of the letters associated with the pressed key to use given the previous two letters. For example, since the is a commonly occurring string, the entry in table **902** addressed by (t, h, 3) returns e, or more concisely the predictive letter entry **2** is returned to indicate that the second letter of the group of letters d, e, and f associated with the three key is the predicted letter. Of course, letter frequency table **902** could be altered to return more than a single letter.

In this embodiment, letter frequency table **902** was empirically generated using a collection of e-mail. Appendix II is a computer program listing that was used to generate letter frequency table **902** that is illustrated in FIGS. **10**A to **10**T. Briefly, the computer program implements a process that sequentially steps through the data provided and (i) for each possible single letter determines the most likely letter that follows for each key on the keypad; and (ii) for each possible combination of two letters determines the most likely letter that follows for each key on the keypad. In this embodiment, the most likely letter is the letter having the greatest frequency after the single letter. Similarly, the most likely letter is the letter having the greatest frequency after the combination of two letters. If there is a tie in the frequency, the first letter associated with a key is selected. Of course, other measures of likelihood could be used to generate the entries in table **902**.

Thus, in FIGS. **10**A to **10**T, the first of the ten columns, i.e., the left most column, is the two letter sequence and the first row, i.e., the top row is the keys on the key pad used to enter text. A combination of an entry in the first column and a key in the top row is used to select the predicted text entry. Thus, using the example of th, this two key sequence appears in the first column of FIG. **10**O. When the three key is pressed, the letter in the row with th as the first entry and in the column with three as the first entry, i.e., e, is retrieved. Alternatively, if the four key is pressed, letter i is retrieved from the table.

In this embodiment, table **902** is a buffer of two bit numbers. Each two bit number has a value in the range of zero to three, and the two bit number represents a predicted letter for the pressed key. Thus, for a two key labeled with letters A, B and C, a zero represents A; a one represents B; and a two represents C. In general, the number of bits used is determined by the key that represents the maximum number of characters. In this embodiment, the maximum number of characters represented by a key is three. The number of storage bits required is an integer S where S is the smallest number such that **2****S is greater than or equal to the maximum number of characters represented by a key.

In this embodiment, three indices i0, i1, and i2 are used generate a table index that in turn is used to access a particular predictive letter entry in table **902** of two bit numbers. Each letter is represented as a number, i.e., a letter entry, with letter A being zero, letter B being a one, letter C being a two, and so forth with letter Z being twenty-five. A space element is assigned a space element value of twenty-six. Thus, in this embodiment, there are twenty-seven possible characters.

Upon the initial entry to process **1100** (FIG. **11**), letter indices i**0**, i1, and i2 were set to twenty-six in the initial processing of the entry card to indicate that the text buffer is empty. Also, as explained more completely below, as each letter of text is entered, letter indices i0 and i1 are updated and stored in memory **716**.

However, in another embodiment, an initialize indices process is the first operation in predictive text entry process **1100**. In this embodiment, for the first letter entered, letter indices i0 and i1 are set to twenty six; for the second letter entered, letter index i0 is set to twenty six and letter index i1 is set to the value of the letter in text buffer **903**; and for all letters entered after the first two, the value associated with next to the last letter in text buffer **903** is assigned to letter index i0 and the value associated with the last letter in text buffer **903** is assigned to letter index i1.

Punctuation key check **1101** determines whether the zero key was pressed, i.e., the key selected to represent punctuation.

If the zero key was pressed, processing transfers from check **1101** to process punctuation entry **1102**. Process punctuation entry **1102** sets index i2 to twenty-six, and sends the space element value to display letter process **1108**. Display letter process **1108** transfers the space element value to display module **712** which in turn drives a space in the text entry on display screen **705**. This completes the operation of process data entry for a zero key press and so processing returns to key press check **820**.

If the zero key was not pressed, processing transfers through punctuation key check **1101** in data entry process **1100** to key one-to-nine check **1103**, i.e., to a data entry key check. If the pressed key was any one of keys one to nine, check **1103** transfers to set letter index process **1104** and otherwise to rotate last entry process **1109**.

In set letter index process **1104**, one is subtracted from the numeric value of the pressed key and the resulting value is assigned to index i2 . Set index process **1104** transfers to generate table index process **1105**.

Generate table index process **1105** combines indices i0, i1 and i2 to create a table index. In this embodiment, table index TABLE_INDEX is defined as:

$$\text{TABLE\_INDEX}=(((i0*27)+i1)*9)+i2$$

Upon completion of generate table index process **1105**, generate text entry process **1106**, retrieves the two bit value in the table at the location pointed to by table index TABLE_INDEX and converts the two bit value to a letter represented by the two bit value.

Generate text entry process **1106** transfers to update index process **1107**, which in turn stores the value of letter index i1 as letter index i0; stores the value of the retrieved letter in letter index i1; and stores the predicted letter in text buffer **903**. While this step assumes that letter indices i0, and i1 are stored and accessed each time in process **827**, alternatively, the last two letters in text buffer **903** can be retrieved and assigned to indices i0 and i1, respectively, as described above.

Update index process **1107** transfers to display letter process **1108**. Display letter process **1108** sends information to display module **712** which in turn generates the predicted letter on display screen **705**.

If the pressed key is not one of keys one to nine, i.e, is not a data entry key, processing transfers from check **1103** to rotate last entry **1109**. Recall that data key check **826** determined whether the pressed key was one of the zero to nine keys, or the # key. Thus, since checks **1101** and **1103** determined that keys zero to nine were not pressed, the only key press remaining is the # key, i.e., the rotate entry key, which indicates the user wants a letter different than the one entered last in text buffer **903**. In rotate last entry **1109**, the last character, i.e., the right most character, in text buffer **903** is replaced by the next character in the set of characters assigned to the last key pressed before the # key was pressed. Again, the use of the # key is illustrative only and is not intended to limit the invention to the use of that particular key to rotate an entry.

For example, if the last character in the text buffer **903** was a t and the # key is pressed, process **1109** changes the t to u. If the # key is pressed again, the u is changed to a v. Alternatively, if the last character in text buffer **903** was a u and the # key is pressed, process **1109** changes the u to a V. If the last character in text buffer **903** was a v and the # key is pressed, process **1109** changes the v to a t. If index i1 is stored, as the last character in text buffer **903** is rotated, index i1 is updated.

Text entry in cellular telephone **700** in different languages or contexts can be supported by using different letter frequency tables. For example, for plumbers, the prediction table can be based on text about plumbing procedures. For Frenchmen, the prediction table can be based on French text. Also, multiple letter frequency tables could be stored in cellular telephone **700**, or selectively transmitted to cellular telephone **700**, and a particular letter frequency table would be selected on an entry card.

In addition, an entry in the table can be more that a single letter, and thus save even more key strokes. For example, if the text buffer contains sche then typing a 3 could return dule rather than just d. Further, this novel method of text entry can be utilized with other than a cellular telephone. The method is applicable to any device that has several characters assigned to a single key on a keypad.

In the above embodiment, the English alphabet and a space element were used as the character set. Thus, the number 27 used in defining the table index is just the number N of characters in the set. Similarly, the number 9 used in defining the table index is just the number M of keys in the keypad that represent two or more different characters. Hence, predictive text entry method of this invention is not limited to text and is directly applicable to any keypad where each key represents a plurality of different characters.

In the embodiment of FIGS. **7**, **8**, and **9**, client module **702** and server module **749** communicate over CDPD network **710**. However, this architecture is illustrative only of the principles of the invention and is not intended to limit the invention to the particular architecture described. Client module **702** and server module **749** can use a wide variety of two-way data communication links to exchange resource locators, e.g., URLs, and TIL decks. For example, the communications link could be a switched voice circuit in which the client module and server module communicate using modems. Alternatively, the communications link could be any other packet switched network, so long as there is some way for client module **702** to get requests to server module **749** and for server module **749** to send data back to client module **702**. Further, a special purpose server could be used in place of HTTP server **749**. For example, the principles of this invention can be used over various data transport mechanisms including circuit switched data and packet switched data. These data transport mechanisms are being defined and implemented for most of the cellular network standards including GSM, TDMA, and CDMA.

In the configuration of airnet network **750** (FIG. **7**), client module **702** communicated directly with a server computer **743**. In another embodiment, as illustrated in FIG. **5**, the two-way data communication device first communicates with an airnet network translator **500** that in turn communicates with the appropriate server. In this embodiment, the operation of two-way data communication devices **100**, **101**, and **102** is similar to that described above for cellular telephone **700**, except the method field in the request generated in process **802** has a different form. For example, using the same information as before, the method field in this embodiment is:

GET http://www.libris.com/airnet/home.cgi?&cost=1 ANTP/1.0

The method field includes the full address of the server, the expected cost of the service, and the version of the protocol used for communicating with airnet network translator **500**. The two-way data communication device transmits the HTTP request including the complete URL to airnet network translator **500**.

FIG. **12** is a more detailed block diagram that illustrates the structures in one embodiment of airnet network translator **500**, according to the principles of this invention. In

this embodiment, airnet network translator **500** is a computer running under the UNIX operating system with an interface to CDPD network **710**. Such computers are well known to those skilled in the art. Thus, herein only the structures and processes that must be added to such a computer are described.

Airnet network translator **500** supports internet protocol (IP) connections over CDPD network **710** and with each computer network with which translator **500** can interact. In this embodiment, each of the modules in network translator **500** are processes that are executed by the processor in the computer. Control module **1201** is a daemon that listens for transmissions over an IP connection from CDPD network **710**. When control module **1201** accepts a transmission, control module **1201** spawns an ANT request processor **1204**, which in this embodiment is a process, as indicated above. While in FIG. **12**, only one ANT request processor **1204** is shown, there is an ANT request processor spawned for each transmission that control module **1201** accepts and the ANT request processor remains active until the communication is terminated.

FIG. **13** is a process flow diagram that illustrates the operation of ANT request processor **1204**. This process flow diagram considers transmissions that utilize both TCP/IP and UDP/IP. However, the processes that are specific only to TCP/IP are enclosed in dashed-line boxes. Upon being spawned for a TCP/IP, in establish connection process **1300**, ANT request processor **1204** establishes a TCP connection using a TCP module in the server with the client module over CDPD network **710**. After the connection is established processing transfers from process **1300** to request received check **1301**.

If UDP is being used, upon being spawned ANT request processor **1204** initiates processing in request received check **1301**. In check **1301**, ANT request processor **1204** determines whether the request from cellular telephone **700** (FIG. **12**) has been received and stored in memory **1210**. Memory **1210** represents both RAM and non-volatile memory in this embodiment. When the request has been received and stored, processing transfers from check **1301** to retrieve data process **1302**.

In retrieve data process **1302**, ANT request processor **1204** retrieves information concerning the source of the URL, i.e., client module **702** of cellular telephone **700** from customer database **1213**, and the destination specified in the URL, i.e., the designated server, from server database **1212**. Both databases **1212** and **1213** are stored in memory **1210**. A customer record in database **1213** includes, for example, a carrier address, e.g., an IP number, an airnet network translator account number, billing information, and server subscriptions. A server record in database **1212** includes a server IP address, name, category, and class of service. Class of service refers to the pricing of the service, e.g., basic services, premium services, or pay-per-view services. Other pricing schemes can be supported in other implementations. When the information is retrieved for the server and service specified in the URL, and for the customer, processing transfers to valid request check **1303**.

In valid request check **1303**, ANT request processor **1204** determines, for example, whether client module **702**, i.e., the customer, is authorized to access airnet network translator **500**; whether client module **702** is authorized to access the server specified in the URL; whether the specified server is available through translator **500**; and whether the specified server supports the requested service. Thus, valid request check **1303**, validates the client, the server, and the client/server pair. Also, since an estimated cost is included in the request, the status and credit limits on the customer's account could be checked to determine whether the estimated cost is acceptable. If all of the checks are true, processing transfers to create HTTP request process **1306**. Conversely, if any one of the checks is untrue, valid request check **1303** passes information concerning the error to return error process **1304**.

Return error process **1304** launches a CGI program stored in memory **1210** based on the information received and passes appropriate information to the CGI program. The CGI program builds an appropriate PIDL deck describing the error and converts the PIDL deck to a TIL deck, as described above. When the TIL deck describing the error is complete, return error process **1304** transfers processing to log transaction process **1315** that is described more completely below.

If all the checks in valid request check **1303** are true, create HTTP request **1306** converts the request in memory **1211** to a request specific to the server specified, which in this embodiment is a HTTP request. For example, for the above request, create HTTP request process **1306** generates a method field, such as

GET/airnet/home.cgi?&client=xyz&cost=1 HTTP/1.0

In this embodiment, the method field includes the same information as in the embodiment described above, and in addition, the method field includes a client identification and the estimated cost.

After create HTTP request process **1306** is complete, ANT request processor **1204** accesses TCP module **1203** in establish server connection process **1307** for TCP/IP and transfers to secure transmission check **1308** for UDP/IP. In establish connection process **1307**, a connection is made between the server designated in the client request and the TCP interface module (not shown) so that data can be transmitted between airnet network translator **500** and the server. When the TCP connection to the server is established, ANT request processor **1204** transfers processing from establish server connection process **1307** to secure transmission check **1308**.

In secure transmission check **1308**, ANT request processor **1204** determines whether the HTTP request from the client requested a server that utilizes a protocol that supports encryption. If such a server was requested, processing transfers to negotiate process **1309** and otherwise to transmit request process **1310**.

In negotiate process **1309**, ANT request processor **1204** negotiates an encryption technique with the server. Upon completion of the negotiation, processing transfers from process **1309** to encryption process **1311**. In encryption process **1311**, the HTTP request is encrypted using the negotiated encryption technique, and then processing transfers to transmit request process **1310**.

In transmit request process **1310**, the HTTP request is sent from memory **1210** to the HTTP server. When the transmission is complete, ANT request processor **1204** goes to result received check **1312**.

As described above, upon receipt of the request, the HTTP server services the request. Upon completion of servicing the request, the HTTP server returns either a PIDL deck or a TIL deck to airnet network translator **500**. The deck is stored in memory **1210**. If the server does not convert the PIDL deck to a TIL deck, the translation is done by airnet network translator **500**.

When the deck is received and stored, ANT request processor **1204** transitions from check **1312** to transmission

completed process **1313** for TCP/IP and to secure transmission check **1314** for UDP/IP. ANT request processor **1204** closes the TCP circuit with the server in transmission completed process **1313**. Upon closing the server TCP connection, processing transfers to secure transmission check **1314**.

If the server utilized encryption, the deck stored in memory **1210** is encrypted. Thus, secure transmission check **1314** transfers processing to decryption process **1316** if encryption was used and otherwise to log transaction **1315**.

In decryption process **1316**, the encrypted deck is decoded and stored in memory **1210**. Also, after the decoding, if the deck must be converted to a TIL deck, the translation is performed. Decryption process **1316** transfer to log transaction process **1315**.

In log transaction process **1315**, ANT request processor **1204** writes a description of the transaction to transaction log **1211** in memory **1210**. In this embodiment, each transaction record includes a customer identification, a server identification, time required for the transaction, cost of the transaction, and a completion code. In one embodiment, for security purposes, each cellular telephone is assigned to only one customer and only one account.

After the transaction is logged, processing transfers to transmit result **1317**. In transmit result **1317**, ANT request processor **1204** returns the deck to client **702**. After the deck is transmitted, ANT request processor **1204** is terminated.

In one embodiment, if an airnet network translator is fully loaded and another transmission comes in, the translator returns the address of another airnet network translator and refuses the transmission. The cellular telephone transmits the message to the other airnet network translator. In yet another embodiment, all incoming transmissions are directed to a router. A plurality of airnet network translators are connected to the router. The router monitors the status of each translator. Each incoming transmission is routed to the least busy translator, which in turn responds to the transmission and performs the necessary operations for continuing communications with the client module.

In the above description of client module **702**, module **702** interacted with components within the cellular telephone to perform the various operations specified by the user. To insulate client module **702** from the exigencies of various cellular telephones to the extent possible, a general architecture for client module **702** is described more completely below. This general architecture is designed to have specific manager modules that interact with the modules described above within the cellular telephone and to provide standard information to the remaining manager modules within client module **702**. The manager modules with client module **702** form an interpreter that interprets TIL decks to generate a user interface; interprets data input by the user; and interprets the TIL decks so that the data input by the user is combined with an appropriate resource locator and either a message is sent to an appropriate server, or another local TIL deck is interpreted by client module **702**. While this embodiment is for a cellular telephone, the manager modules are generic and so are applicable to any client module in a two-way data communication device.

This approach limits the modifications that must be made to client module **702** to implement the principles of this invention in a wide variety of two-way data communication devices over a wide variety of two-way data communication networks. Also, in the above embodiment, client module **702** supported communications and interactions over the cellular telephone network. However, client module **702** can also support local services on cellular telephone **700**. Typical local services includes local messages, an address book, and preconfigured e-mail replies, or any combination of such services.

In this embodiment, client module **702** includes a plurality of manager modules including a navigation manager module **1401**, a network manager module **1402**, a TIL manager module **1403**, an archive manager module **1404**, a local manager module **1405**, an event manager module **1406**, a timer manager module **1407**, a user interface manager module **1408**, a memory manager module **1409**, and a device dependent module **1410**.

Navigation manager module **1401** handles card and deck navigation as well as managing any caches. Navigation manager module **1401** owns and manages a history list and as well as a pushed card list. In addition, navigation manager module **1401** functions as the main line of client module **702**; does all event distribution; and supports local services.

For local services, like local message store, there are two basic approaches that can be used. First, local services are implemented in a CGI-like manner. Each local service has an entry point which is called with an argument list. A TIL deck is returned via the event manager. From that point on, the TIL deck is processed in the standard manner. This approach limits local services to the same constraints as remote services. A less restrictive approach is to allow the local service to field events instead of the standard event loop. The local service would construct TIL cards on-the-fly and feed them to user interface manager **1406**. Note that the local service would need to cooperate with the standard event loop with regard to the history, the pushed card list, and any other state that is normally managed by the event loop. Table 4 is a listing of processes for the architecture is for navigation manager module **1401**.

TABLE 4

ARCHITECTURE FOR NAVIGATION MANAGER MODULE 1401

```
ProcessEvents (void);
PushLocation (void * location, Boolean forStack);
void * PopLocation (Boolean forStack);
void * CurrentLocation();
struct LOCAL_ SERVICE {
    char name[50];
    FUNC HandleEvent(Event * pevent);
    FUNC StartLocalService(void);
    FUNC StopLocalService(void);
    };
static LOCAL_SERVICE localServices[]={ . . . };
STATUS HandleEvent(Event * pevent);
STATUS StartLocalService();
STATUS StopLocalService();
```

Routine ProcessEvents is the main entry point for event processing in client module **702**. Typical events include key presses on the keypad, choice selection for a choice card, text entry for an entry card, network events, and history events. Routine ProcessEvents can be called at any time to process an event or events. Routine ProcessEvents does not return until all events on a queue generated by event manager module **1406** are processed. If a local service is running, events are distributed to the local service before being processed by routine ProcessEvents.

The remaining routines in Table 4 are called internally to navigation manager module **1401** and by local services. Routine PushLocation pushes a location on the history list and issues a request for that location. The forStack flag indicates a stack push of local cards.

Routine *PopLocation pops a location on the history stack and issues a request for the top location of the history stack.

In routine *PopLocation the forStack flag indicates that all cards since the last stack push should be popped.

Routine *CurrentLocation returns the current location the current URL being displayed.

As shown in Table 4, each local service provides a number of functions. If a local service is running, function HandleEvent, the local service's event handler, is called before any processing by navigation manager module **1401**. If the event is handled by the local service, the event is not processed any further.

Function StartLocalService is the local services start function. Function StartLocalService is called before any events are distributed to the local function. Similarly, function StopLocalService is the stop function for the particular local service. Function StopLocalService is called when no more events are distributed to the local service.

Network manager module **1402** insulates the rest of client module **702** from the specific networking protocol used over the cellular telephone network. Network manager module **1402** delivers requests to the server specified in the URL via the cellular telephone network interface; segments responses from the server for lower latency; delivers responses from local services to navigation module **1401** via event module **1406**; handles request/response cycle (e.g. cancellation, retry strategy) with the server over the cellular telephone network; can receive asynchronous messages from the server; performs memory management of TIL decks; performs caching of TIL decks; handles all negotiations concerning protocols and server scaling with the server; handles any encryption for information exchanged between cellular telephone **700** and the server.

In some cellular telephone, the maximum message size is fixed. However, for UDP and TCP messages, a more direct interface is used that bypasses this limitation of message passing. It is important to avoid copying network data from memory buffer to memory buffer as such copying increases the memory "high water mark" as well as decreases performance. Since different cellular telephones have different interfaces for delivering network data, network manager module **1402** manages the network data. In this way, network data is only copied from the network buffer for long-term storage.

When a message or reply arrives, network manager module **1402** uses event manager module **1406** to report that fact. However, access to the data by other manager modules in client module **702** is through a protocol that allows storage of data in a variety of fashions on different telephones. Any transparent, short-term caching of TIL data is handled by network manager module **1402**. Table 5 is one architecture for network manager module **1402**.

TABLE 5

SPECIFICATION FOR NETWORK MANAGER MODULE 1402

typedef short TID;
void NM_Init(void);
void NM_Terminate(void);
TID NM_SendRequest (void *requestData, int length, Boolean ignoreCache);
NM_CancelRequest (TID TRANSACTIONId);
NM_DataType(TID TRANSACTIONId);
NM_GetData(TID TRANSACTIONId, void *data, int *length, Boolean *complete);
void *NM_HoldData (TID TRANSACTICNId);
NM_ReleaseData(TID TRANSACTIONId);
TID NM_StartData(int data Type, char *requestData, int length);
STATUS NM_EndData(TID TRANSACTIONId);

TABLE 5-continued

SPECIFICATION FOR NETWORK MANAGER MODULE 1402
STATUS NM_SetDataLength (TID TRANSACTIONId, int length); STATUS NM_GrowDataLength (TID TRANSACTIONId, Int grow); int NM_GetDataLength(TID TRANSACTIONId); void *NM_GetDataPointer (TID TRANSACTIONId); STATUS NM_DeliverData (TID TRANSACTIONId);

Network manager module **1402** identifies each network data transaction by a 16-bit transaction identification code TID. Network manager module **1402** increments transaction identification code TID by one for each new transaction. Transaction identification code TID rolls over after 0xffff.

Routine NM_Init initializes network manager module **1402** and so is called before any other calls in network manager module **1402**. Routine NM_Terminate closes processing of network manager module **1402** and so is called after all other calls in network manager module **1402**.

Network manager module **1402** uses routine TID NM_SendRequest as the standard process of sending a request to the server. Pointer *requestData in the call to routine TID MN_SendRequest is defined by the server protocol. Similarly, the state, e.g., the Boolean value, of variable ignoreCache is used to indicate whether any cached replies should be ignored. After sending the request, this routine returns a server transaction identification code TRANSACTIONId. A local service can also send a request to the server.

When the user instructs client module **702** to cancel a request, network manager module **1402** calls a routine NM_CancelRequest with cellular telephone transaction identification code TID and server transaction identification code TRANSACTIONId. Routine NM_CancelRequest issues a command to the server to cancel the specified request.

When data are received from the network, the data can be either a response to a request sent by routine TID MN_SendRequest, or by a local service. Thus, in response to receiving data from the server, network manager module **1402** generates an event that includes server transaction identification code TRANSACTIONId and the type of data DATAType. For replies to requests sent by routine TID MN_SendRequest, server transaction identification code TRANSACTIONId is the same as the one returned by the matching call to routine TID MN_SendRequest and data type DATAType indicates that the data is a response. For local service originated messages, server transaction ID is new, and data type DATAType depends on whether the data is an e-mail, pushed TIL, or another type.

After the network event is received by event manager module **1406**, and navigation manager module **1401** distributes control of the event to network manager module **1402**, network manager module **1402** users the server transaction identification code TRANSACTIONId and the remaining routines in Table 5 to process the data.

Routine NM_DataType is used to return the particular data type dataTYPE, e.g, reply, MIME, server push, etc. Routine NM_GetData sets a pointer to the data identified by server transaction identification code TRANSACTIONId, retrieves the length of the data, and determines whether all the data has been received. The interface provided by this routine allows the first part of a data stream, e.g. the first card of a TIL deck, to be processed by client module **702** before the rest of the deck is received.

Routine NM_HoldData is called before calling routine NM_GetData to hold the data and thus insure that the data remains valid during processing by client module **702**. If the data is not held, the data can be deleted or moved with the internal buffers of network manager module **1402**. If the data is held, routine NM_ReleaseData is called after network data has been processed to release the data.

Routines TID NM_StartData, NM_EndData, NM_SetDataLength, NM_GrowDataLength, NM_GetDataLength, NM_GetDataPointer, and NM_DeliverData are used internally by network manager module **1402**, and by local services to deliver data. By allowing local services to use these routines, the same buffers can be used to store both network and locally generated data thereby reducing the amount of memory required to support client module **702**.

Routine TID NM_StartData creates a new data transaction and triggers a data delivery event. Routine NM_EndData is called when all data for the given server transaction identification code TRANSACTIONId has been transmitted. Routine NM_SetDataLength sets the data segment to a given length and may cause the location of the data to change. Routine NM_GrowDataLength grows the data segment by a given length and also may cause the location of the data to change. Routine NM_GetDataLength returns the length of the data segment. Routine NM_GetDataPointer returns a pointer to the data. This routine is preferably called before writing into the data buffer. Also, this routine is preferably called whenever the data's location may have changed. Routine NM_DeliverData can be called when at least one card has been stored to reduce latency while the other cards are being generated.

TIL manager module **1403** insulates the rest of client module **702** from changes to the TIL specification. The interface provided by TIL manager module **1403** has the following characteristics: removes the need for parsing by the rest of client module **702**; uses cursors to avoid generating data structures on-the-fly; does not need an entire deck to operate; and handles TIL versioning.

Each TIL deck contains a major and a minor version number. The minor version number is incremented when TIL changes in a way that does not break existing TIL manager modules. The major version number is incremented for non-compatible versions of TIL.

Each TIL deck has the same hierarchy. One embodiment of this hierarchy is presented in Table 6. In Table 6, indentation is used to represent the relationships of the various hierarchical levels.

TABLE 6

TIL DECK HIERARCHY

```
deck
    options
    softkeys
        options
    card
        options
        softkeys
            options
        formatted text
            formatted lines
        entries
            options
formatted line
```

The interface presented in Table 7 for TIL manager module **1403** is designed with the assumption that TIL is a direct tokenization of PIDL as described in Appendix I. However, the interface does not have any dependencies on that tokenization and can support other PIDL encoding techniques. Given the above assumption, the opaque pointers described below are actual pointers into the TIL deck itself. A rudimentary object typing scheme based on where in the deck the opaque pointer points can be used to implement the generic functions described below. If this object typing is not feasible due to details of TIL encoding, the generic functions can be replaced with specific functions.

TABLE 7

ARCHITECTURE FOR TIL MANAGER MODULE 1403

```
        typedef char *opaque;
        typedef opaque Deck;
        typedef opaque Card;
        typedef opaque Text;
        typedef opaque Entry;
        typedef opaque Option;
        typedef opaque SoftKey;
        typedef opaque Object;
/* Generic functions */
        FirstOption(Object obj, Option *o);
            /* obj is a card, softkey, entry, or deck */
        GetSoftkey(Object obj, Option *o);
            /* obj is a card or deck */
        GetText(Object obj, Option *o);
            /* obj is a card or entry */
/* Deck functions */
        SetDeck(Deck d, int length);
            /* tells module which deck to use */
        DeckGetCard(Card *c, int num);
-or-
        DeckGetCard(Deck d, Card *c, int num);
/* Card functions */
        int CardType(Card c);
        CardFirstEntry(Card c, Entry *e);
        CardLookupSoftkey(Card c, int num, Softkey *s);
        CardIsLast(Card c);
/* Option cursor functions */
        OptionNext(Option *o);
        char *OptionKey(Option o);
        char *OptionValue(Option o)
/* Entry cursor functions */
/* Text (and image) cursor functions */
        TextNextToken(Text *t, int *type, int *subtype,
                        int *length, char *data);
```

Archive manager module **1404** stores and retrieves long-lived information. This information includes: data related to the server's location and/or required to support server scaling; data related to encryption; TIL caching (transparent to user); TIL storage (specified by user); and message storage and retrieval (see local manager module) . Archive manager module **1404** should support a variety of nonvolatile memory schemes that are provided by the two-way data communication devices.

Local manager module **1405** is an interface to local device resources, such as local messages, address book entries, and preconfigured e-mail replies. Local manager module **1405** should also define an abstract interface to navigation manager module **1401** for use by archive manager module **1404**.

Table 8 is an architecture for an interface within local manager module **1405** to access to an address book stored on cellular telephone **700**. The name of a routine in Table 8 is descriptive of the operations performed by the routine.

TABLE 8

ARCHITECTURE FOR ADDRESS BOOK ACCESS

int NumAddresses();
char *AddressName(int num);
char *AddressGetEMail(int num);
// returns e-mail address
char *AddressGetPhone(int num);
// returns phone number
char * AddressGetFax(int num);
// returns fax number
SetAddress(int num, char *name, char *email,
char *phone, char *fax);
DeleteAddress(int num);
InsertAddress(int before);

Table 9 is an architecture for an interface within local manager module **1405** to access predetermined replies stored on cellular telephone **700**. The name of a routine in Table 9 is descriptive of the operations performed by the routine.

TABLE 9

ARCHITECTURE FOR PREDETERMINED REPLY ACCESS

int NumReplies();
char * GetReply(int num);
DeleteReply(int num);
SetReply(int num, char *text);
InsertReply(int before);

Table 10 is an architecture for an interface within local manager module **1405** to access messages stored locally on cellular telephone **700**. The name of a routine in Table 10 is descriptive of the operations performed by the routine.

TABLE 10

ARCHITECTURE FOR LOCALLY STORED MESSAGE ACCESS

int NumMessages();
void *FirstMessage();
void *NextMessage();
int MessageType(void *msg);
// e.g. e-mail, TIL, etc.
void *MessageContent(void *msg);
void *SaveMessage(int type, void *content, int
contentLength);
DeleteMessage(void *msg);

Event manager module **1406** handles the distribution of events. In this embodiment, events include low-level events like key presses and higher level navigation and user interface events. There are typically only a small number of events at any one time. The main event loop in the two-way data communication device dependent module keeps calling EM_GetNextEvent ( ) until no events are left in the queue. Note that processing one event can cause another event to be pushed onto the queue. The main event loop is not restarted until another event is pushed onto the queue due to a user key press or a network event.

In this embodiment, the event types include:

1) keypad events, i.e., pressing of a key;
2) choice events relating to a current choice card, e.g., the user selecting choice three;
3) text entry events relating to a current entry card, e.g., the user keying in "Hello";
4) network events , e.g., response arrived, request arrived , transaction terminated, network status; and
5) history events, e.g., pop, pop to marker.

Table 11 is an architecture for event manager module **1406**. As in the other tables herein, the name of a routine in Table 11 is descriptive of the operations performed by the routine and in addition a brief description is given in the comment field.

TABLE 11

ARCHITECTURE FOR EVENT MANAGER MODULE 1406

struct Event {
int type;
void *data;
/* e.g. keycode, choice num, entry
text, status code, other data */
}
EM_QueueEvent(int type, void * data);
/* Adds event at end of queue*/
EM_GetNextEvent(Event * event);
/*Pops next event*/
EM_PeekNextEvent(Event event);
/*Peeks at next event*/

Timer manager module **1407** allows timer events to support timeouts, animation, and other time-domain features. Timeouts are delivered via event manager module **1406**.

Table 12 is an architecture for timer manager module **1407**. As in the other tables herein, the name of a routine in Table 12 is descriptive of the operations performed by the routine.

TABLE 12

ARCHITECTURE FOR TIMER MANAGER MODULE 1407
TimerInit(); int TimerSet(int milliseconds, int code, void *clientData); /*Returns a timer identification timerId to be used for cancellations*/ TimerCancel(int timerId); TimerCancelAll()

User interface manager module **1408** handles interactions with the keypad and the display. Each of the three types of user interfaces defined in Table 1 above requires a different version of user interface manager module **1408**. For most cellular telephones, only one card at a time is used. However, some cellular telephones can display multiple cards at once and so would require a different version of user interface manager module **1408** from the version that handled display of only one card at a time.

In this embodiment, user interface manager module provides a user interface for the three types of cards display, choice, and entry; provides hooks for custom user interfaces for the address list and e-mail reply entry; only cares about the user interface aspects of cards and provides no navigation, argument, or option processing; handles all text and graphic layout including word wrapping; handles scrolling of text; operates from PIDL data structures; generates keyboard events, some of which may be generated by soft keys; and generates high-level events, e.g. next card, choice entry 3, text entry "IBM".

Table 13 is an architecture for processing cards by user interface manager module **1408**. As in the other tables herein, the name of a routine in Table 13 is descriptive of the operations performed by the routine.

TABLE 13

ARCHITECTURE FOR CARD PROCESSING BY UI MANAGER MODULE 1408

void UI_StartCard(Card c);
/* called to begin display and processing of a given card*/
void UI_EndCard(Card c);
/*called when a card is no longer to be displayed*/
Boolean UI_HandleEvent(Event *pevent);
/*returns true if the event is handled, false if not*/

Table 14 is an architecture for the user interface implementation by user interface manager module **1408**. As in the other tables herein, the name of a routine in Table 14 is descriptive of the operations performed by the routine.

TABLE 14

ARCHITECTURE FOR UI IMPLEMENTATION BY UI MANAGER MODULE 1408
UI_ LayoutCard(Card c, Boolean draw, Proc callback) /* relies on global data; needs to be able to: draw as it goes; and note the special function of the currentLine (e.q. none, choice, softkey)*/ int numLines, firstVisible, lastVisible, currentLine; char currentEntry[80]; int currentChoice; void *currentSoftkey; Card currentCard; and . . . other info as needed for in-line scrolling

The callback routine is notified of the special function of each line as the line is laid out. Thus, routine UI_LayoutCard can be used to scroll to a particular choice. If the current line is too wide to display all at once, horizontal scrolling is used to display the complete line, one display width at a time.

Memory manager module **1409** is optional, and is used in two-way data communication devices that do not support dynamic memory allocation. In these devices, all memory allocation and releases must go through memory manager module **1409**. Also, by allocating memory in advance via memory manager module **1409**, client module **702** does not run out of memory due to some other process on the device using up memory.

Microfiche Appendix A is a computer source code listing in the C++ computer language of one embodiment of a client module within a cellular telephone, and one embodiment of an airnet network translator that was used with an Internet server to communicate with client module. The Internet server was a UNIX computer running the Mosaic HTTP server. The source code was used to generate executable code by compiling the source code on a computer running the Sun Microsystems Operating System Solaris 2.4 using Sun Microsystems compiler SunPro C and C#, and the Sun Microsystems SDK make utility. All of these products are available from Sun Microsystems of Mountain View, Calif.

This application is related to copending and commonly filed U.S. patent application Ser. No. 08/XXX,XXX entitled "A PREDICTIVE DATA ENTRY METHOD FOR A KEYPAD" of Alain Rossmann, which is incorporated herein by reference in its entirety.

Various embodiments of a novel interactive two-way data communication system, a two-way data communication device, an airnet network architecture, and a predictive text entry system have been described herein. These embodiments are illustrative only of the principles of the invention and are not intended to limit the invention to the specific embodiments described. In view of this disclosure, those skilled in the art will be able to use the principles of this invention in a wide variety of applications to obtain the advantages of this invention, as described above.

APPENDIX I

A DESCRIPTION OF PIDL AND TIL

Unpublished© 1995 Libris, Inc.

The main structure of PIDL is described by an abstract syntax. This appendix describes the elements of the language and their semantics. In the syntax description of each element, an element is defined in an enhanced BNF.

a : : = b	the element a is defined as b
a : : = b : : = c	the element a is defined as b or c
b c	the element b followed by element c, the intervening space is just for clarity
a|b|c	element a or element b or element c
{a}	the element a is optional
{a}*	the element a may appear zero or more times in a row
{a}+	the element a may appear one or more times in a row
abc	the characters abc literally
ol(a)	an option list with zero or more topions of the element a, see Options below

In general, the element blank-space can optionally appear between any two other elements. To keep the diagram clear, it has been omitted except where required. Where a blank-space is illegal or treated specially, it is noted.

The PIDL ELEMENTS

```
deck          ::= deck-header {softkey}* {card}+ deck-
                  footer
deck-header   ::= <PIDL  ol(deck-options) >
deck-options  ::= o-args | o-cost | o-ttl
deck-footer   ::= </PIDL>
```

A deck consists of one or more cards. There must be at least one card. A deck may also have a number of softkeys defined that stay in force for the whole deck. See soft keys below for the syntax and full description.

```
o-cost        ::= cost=  value
o-ttl         ::= ttl=  integer
```

Additional arguments to be passed on the next deck request are given in o-args. See Arguments below for syntax and full description.

The cost of retrieving this page (exclusive of telephone system charges) is represented in o-cost. If no o-cost is given, the deck cost is included with the user's standard service contract.

Decks can be cached by the cellular telephone for a period of time. The o-ttl entry indicates the number of seconds that the deck can be cached from time of reception. If no o-ttl entry is given, the deck can only be cached for short periods of time, for example, to

L:\DMS\7574\M-3423_U\0135864.04A

implement a back function similar to that of most Web browsers. If the value of o-ttl is zero, the deck must not be cached.

CARD ELEMENTS

card ::= display-card | choice card | entry-card

A card is one of three types of card in this embodiment. These are described in the sections below.

card-options ::= o-name | o-next | o-prev

o-name ::= **name=** identifier

o-next ::= **next=** destination

o-prev ::= **prev=** destination

All cards can have these options. The optional o-name option gives a name to the card. If a card has a name, the card can be referred to by a destination.

The o-next and o-prev give destinations for the NEXT and PREV keys. If omitted, the defaults are the next and previous sequential card in the deck. If o-prev is omitted from the first card, the PREV key returns to the deck last visited. If o-next is omitted from the last card, the NEXT key returns to the first card of the current deck. However, this default behavior is only a fail-safe: the last card in a deck should always have either an o-next option, or be a choice card where each choice entry indicates a new destination.

IPR2025-00856
Apple EX1030 Page 63

L:\DMS\7574\M-3423_U\0135864.04A

DISPLAY CARD

```
display-card     ::= display-header display-content
                     display-footer
display-header   ::= <DISPLAY option-list >
display-options  ::= card-options
display-content  ::= { softkey }* formatted text
display-footer   ::= </DISPLAY>
                     Display cards give information for the
                     user to read. See Formatted Text below
                     for a full description of the format of
                     information that can be displayed.
                     Softkeys can be described for this card
                     only, see Softkeys below.
```

CHOICE CARD

```
choice-card      ::= choice-header display-content
                     { entries } choice-footer
choice-header    ::= <CHOICE  ol{choice-options} >
choice-options   ::= card-options | o-method | o-key
                     | o-default
o-method         ::= method= method-type
method-type      ::= number | list | alpha | group
entries          ::= { choice-entry }+
                 ::= { group-entry { choice-entry }+ )+
choice-footer    ::= </CHOICE>

                     Choices let user pick one from a list.
                     The initial display content is shown to
                     the user, followed by the choices.  Each
                     choice can have one line of formatted
                     text (which may be wrapped or scrolled
                     by the phone if too long).

                     How the choices are displayed and chosen
```


IPR2025-00856
Apple EX1030 Page 64

is based on the o-method option. Note that this option is a hint only, and can be disregarded by the phone. The number method is the default and indicates that the choices are numbered sequentially from one and are chosen by pressing the appropriate digit on the keypad. If there are more than nine options, the phone may choose some other method of selection. The list method indicates that the list should be unnumbered and that the user should scroll through the list and hit some designated enter key to choose an entry. The alpha method is like list, only it is an indication that the text of the entries should be used to aid selection if at all possible. In this case, the entries are assumed to be alphabetically sorted. The group method is described in more detail below.

The o-key option indicates, if present, the key of an argument to be added to the argument list. See Arguments below for more information. The value of the argument comes from the choice entry; see below. The o-default option indicates the default value if the user just hit ENTER. See o-default under Entry Card below for more information.

choice-entry ::= **<CE** ol(entry-options) **>** formatted-line

entry-options ::= action-options | o-value

Each choice has text displayed to the user. If the action-options are given,

the indicated action is performed if the choice is made. If the o-value option is present, it supplies the value to the argument identified with the o-key option in the choice header. If no o-value is given, the text of the entry is used (without any formatting) as the argument value.

```
      group-entry  ::= <GE ol(group-options) >
    group-options  ::= label=  value
```

If the group method is used, the choices are divided into a number of groups. Each group is headed by a group-entry, which, via the label option, gives a short name to the group. The phone can then give the user a hierarchial interface for choosing among a large number of choices. The text of the label should be limited to eight characters and may be truncated by the phone.

ENTRY CARD

```
       entry-card  ::= entry-header display-content entry-
                   footer
     entry-header  ::= <ENTRY  ol(entry-options) >
    entry-options  ::= card-options | o-format | o-key
                    | o-default
     entry-footer  ::= </ENTRY>
```

Entries let the user enter a value. The display content is shown to the user, followed by an entry line. The user's entry is controlled by the format. The o-key option indicates the argument that

is being set by this entry. The value of the argument are the user's entry.

o-format ::= **format=** value { ; format-hint }
format-hint ::= value

This option specifies the format for user input entries. The string consists of format control characters and static text which is displayed in the input area. Most of the format control characters control what data is expected to be keyed in by the user. They are displayed as blanks until the user types into them.

The format codes are:

- A — entry of any alphabetic character
- 9 — entry of any numeric character
- X — entry of any alphabetic or numeric character
- ***f** — allow entry of any number of characters; the next character, **f**, is one of A, 9 or X and specifies what kind of characters can be entered.
- **\c** — display the next character, **c**, in the entry field; allows display of the formatting characters in the entry field.

Format hints indicate what kind of value is expected. If a format hint is not understood, it is ignored. Currently defined format hints are:

text	text is expected to be text, use special input techniques; generally follows ***A** or ***X**
mail-reply	like text, but expected text is for an e-mail message or page; may affect input algorithm
address-list	entry is a list of e-mail addresses

o-default ::= **default=** value

The o-default option supplies a value that is used if the user simply hits NEXT. If no default value is given, then the user must supply a value.

FORMATTED TEXT

formatted-text ::= { { flow-image } { line-format } text-line)*

formatted-line ::= text-line

text-line ::= { text | image | text-format | alignment-format }*

Formatted text is what is shown to the user in most cards. Formatted lines are used for choice entries.

text-format ::= **<B>** | **<I>** | **<BL>**

::= **</B>** | **<I>** | **<BL>**

The format codes control Bold, Italic and Blinking. The slash versions cancel the formatting. Unlike HTML, these needn't be strictly nested and over application and over cancellation are

tolerated. Formatted-text and formatted-line elements start in plain mode (no bold, italic, or blinking).

alignment-format ::= **<CENTER>** | **<BOLD>** | **<TAB>**

The alignment codes specify how parts of a line are to be laid out. The text following the alignment code is either centered or right justified on the same line as the other text. The text or image following the code is considered to be all text up to the next alignment code or line break. All lines start implicitly aligned left. Note that these do not include an implicit line break so that one can have both left and right justified text on a single line. If there is too much text and not enough room on the line then, if in wrap mode, the non-fitting text is moved to the next line and aligned the same way. If in line mode, the line may end up running together with two spaces between the left, center, and right justified segments.

The tab code is used to create aligned columns. Rather than tab to specific character positions, the tab code separates the text for each column. The width of the column is determined by the maximal width of the text (or images) in each line. The extent of the columns is from the first line with tab codes through the last contiguous line with tab codes. Some lines may have fewer

L:\DMS\7574\M-3423_U\0135864.04A

tab codes than others, in which case they are assumed to have no text for the extra columns.

```
line-format  ::= <WRAP> | <LINE>
             ::= <BR>
```

Multiple lines of text are separated by the <BR> code. If a line is too long to fit on the screen and, if in wrap mode, the line is word wrapped onto multiple lines. If in line mode, the line is left as one line and is scrolled horizontally. Formatted-text and formatted-line elements start in wrap mode and may be changed with either the <WRAP> or <LINE> codes. These codes are an implicit line break.

IMAGES

```
image        ::= <IMAGE ol(image-options) >
             ::= <INLINE ol(image-options) >
             inline-data  </INLINE>
flow-image   ::= <IMAGE ol(flow-image-options) >
             ::= <INLINE ol(flow-image-options) >
             inline-data </INLINE>
image-options      ::= o-source
flow-image-options ::= image-options | o-flow
inline-data        ::= ASCII85 encoding of image data
```

Images are treated as large words and, by default, are simply displayed as part of the text. Flow-Images have a flow option that causes them to be treated differently. The image data is stored in a separate data stream as identified

IPR2025-00856
Apple EX1030 Page 70

L:\DMS\7574\M-3423_U\0135864.04A

by the source option.

Inline images are treated identically, only the data is part of the current data stream. ASCII85 is a standard way of encoding binary data in printable ASCII, whereby each four bytes of data is encoded in five characters. Note that TIL only uses inline images, and uses a different encoding.

o-source ::= **src=** location
This option specifies the location of the source for images.

o-flow ::= **flow=** { **left** | **right** }
This option controls the alignment of flow-images. The option specifies that the image is flush left or flush right with the screen. Subsequent lines of text flow in the remaining right or left hand space.

SOFTKEYS

softkey ::= **<SOFTKEY** ol(softkey-options) **>**
softkey-options ::= o-label | o-button | action-options

Softkeys supply definitions for two buttons known as SOFT-L and SOFT-R. They do not show up in the normal text and graphics area displayed to the user, but on a separate line for soft key labels. (Note: in some implementations, where screen real estate is scarce, this label line may get used for normal text

IPR2025-00856
Apple EX1030 Page 71

and graphics display when there are no softkeys defined on the current card).

When the softkey is pressed, the indicated action takes place.

```
o-button  ::= button= side
    side  ::= left  | right
 o-label  ::= label=  value
```

The button option specifies which physical key the softkey applies to. The label option is the text that is displayed on screen for that key. The phone may truncate the label. It is suggested that labels be fewer than eight characters.

Softkeys can be specified both for the deck as a whole and per card. When specified for the deck (after the deck-header, but before the first card) they remain in effect for the entire deck. When specified for a card (at the beginning of the formatted-text for the card), they temporarily override any deck softkeys while the card is visible. Note that the override is done independently for the two keys (a card can override one softkey, but not the other). To override a deck softkey with no softkey (in effect, to remove a softkey for the duration of a card) use a softkey with no label and no action.

SYNTAX: OPTIONS

Many of the syntactic elements of PIDL have option lists associated with them. Options refine the operation of the elements they are part of. Unless otherwise noted, options do not nest, even when the same option is given in two nested elements. Options that are not defined for an element are ignored, even if valid for an enclosing element.

```
ol(valid-option)  ::= { blank-space valid-option }*
                  {blank-spaces }
     option-list  ::= ol(option)
          option  ::= key = value
             key  ::= identifier
           value  ::= plain-text
                  ::= " { text } "
```

An option list contains zero or more options. Each option is separated by blank-space (required!) and optionally followed by blank-space. In the syntax diagrams, option lists are shown as: ol(*valid-option*) where *valid-option* is replaced with an element that defines the possible options in this context. ol is a generic syntactic description of option-lists.

Each option is a key and a value. They may be given in any order within the list of options. The key is always an alpha-numeric name that is case insensitive. The value, if it is composed of only alphanumeric characters, may appear directly after the equals sign. Otherwise, the value

must be quoted. In quotes, blank-space is treated literally and is considered part of the value.

In the syntax diagrams, the possible values for various options are specified without quotes. However, quotes are always acceptable around an option value.

Unlike almost all other syntactic elements, blank space is **not** permitted between the key and the equals sign or between the equals sign and the value.

Many options have a more restricted set of possible values than represented by the above syntax. See the individual options for details.

```
                    DESTINATIONS
     destination  ::= location { ; animation }
                  ::= card-loc { ; animation }
                  ::= stack-operation { ; animation }

        location  ::= full-loc  | partial-loc
                  | relative-loc
        full-loc  ::= : service-id / deck-path
                  ::= : service-host / deck-path
    partial-loc   ::= / deck-path
   relative-loc   { ../ }* deck-path

        card-loc  ::= # identifier

       deck-path  ::= plain-text { / plain-text }*
      service-id  ::= % plain-text
```

```
service-host   ::= plain-text
                   Destinations are used in some options to
                   indicate the next, or previous deck or
                   card to show.  A deck is specified
                   either with a full location (service-id
                   and deck-path), just a deck-path (in
                   which case the service is the same as
                   the current deck's service), or a
                   relative deck-path.  In the later case,
                   the last component of the current deck-
                   path is removed, (and one additional
                   component for each ../ in the relative
                   deck-path), and the deck-path appended.

                   A particular card can be a destination
                   and is specified by a card-loc element.


stack-operation    ::= + card-loc
                   ::= -
                   In addition to the normal history list
                   of where a user has been that is kept by
                   a phone, the phone also keeps a short
                   stack of locations.  Using a plus sign
                   form causes the current location (deck
                   and card, and location in the history
                   list, and animation used) to be pushed
                   on the stack before going to the new
                   card.  Using the minus sign form causes
                   a return to the location on the top of
                   the stack, and the history list to be
                   pruned back to the saved point.  If no
                   animation is given, the inverse
                   animation is used.  The stack is popped.

animation          ::= slideN  | slideS
```

L:\DMS\7574\M-3423_U\0135864.04A

::= **slideW** | **slideE**
::= **slideSW** | **slideNE**
::= **slideSE** | **slideNW**
::= **flipV**
::= **flipH**
::= **fade**
::= **none**

The optional animation argument indicates what form of screen animation, if available, is to be used when going to the destination. The animation is remembered with the destination in the history and destination stack. If the user moves to a destination via a 'go' or 'next' operation, then the animation is performed. If the user moves to a destination via a 'prev' or 'pop' operation, the reverse animation associated with the current location is performed.

ACTIONS

Choice entries and soft keys can specify actions to be performed when the user selects the choice or softkey.

action-options ::= o-args | o-call | o-page
o-go ::= **go=** destination
o-call ::= **call=** value

The go operation indicates that the destination should be moved.

ARGUMENT PROCESSING

Each time a deck is requested, arguments may be passed along with the request.

IPR2025-00856
Apple EX1030 Page 76

L:\DMS\7574\M-3423_U\0135864.04A

These arguments may be used by the service end to compute a deck specific for the user rather than just return a pre-written deck.

Arguments are built-up as the user traverses the deck. Each argument is a key-value pair. While arguments superficially look like options, these two entities are quite distinct: Options are a part of PIDL and affect the operation of the phone. Arguments are information gathered by the phone and returned to the service. Neither PIDL nor the phone understands the arguments beyond their basic syntactic structure.

Arguments come from three places: Choice cards, Entry cards, and the args option. Each of these specifies a key-value pair that is added to a buffer of arguments to be sent. In the case of the args option, multiple arguments may be specified. When an argument key-value pair is added to the argument buffer, if the key is already present in the buffer, its value is replaced.

```
        o-args  ::= args=  arg-list
argument-list   ::= arg-key-value { { & | ; }
                key-value }*
arg-key-value   ::= arg-key = arg-value
      arg-key   ::= identifier
    arg-value   ::= plain-text
```

Note: The entire o-args element is

IPR2025-00856
Apple EX1030 Page 77

actually the value of an option. If it has more than one arg-key-value it will need to be in quotes. Since the ampersand (&) and semi-colon (;) are used as key-value pair separators, these characters cannot be part of argument values.

```
      o-key  ::= key=  arg-key
    o-value  ::= value= arg-value
```

These options are used in choice and entry cards to specify the key and value for the arguments those cards set.

BASIC ELEMENTS

```
      alpha  ::= any alphabetic character
    numeric  ::= any digit
alpha-numeric ::= alpha  |  numeric
        hex  ::= numeric  |  any letter A through F,
                 either case
  blank-space ::= { space  |  tab  |  new-line }+
        space  ::= the space character
          tab  ::= the tab character
     new-line  ::= the carriage return character
               ::= the line feed character
               ::= the sequence carriage return, line
               feed

         word  ::= { alpha-numeric }+
   identifier  ::= alpha { alpha-numeric }*
      integer  ::= { +  |  - } { numeric }+

         text  ::= any 7-bit ASCII character except <,
               >, ", or &
               ::= &gt;  |  &lt;  |  &quot;  |  &amp;
```

L:\DMS\7574\M-3423_U\0135864.04A

```
                    |   
                    ::= any ISO-Latin-1 named entity
                    ::= &# hex hex ;
                    In text, runs of blank-space are treated
                    as single spaces and my be used as point
                    for word wrapping.
        plain-text
              safe  ::= { alpha  |  numeric  |  safe }*
                    ::= $  |  -  | _  | @  |  .  |  &  |  !
                    |  *  |  ,
```

L:\DMS\7574\M-3423_U\0135864.04A

APPENDIX II
A COMPUTER PROGRAM TO GENERATE
A LETTER FREQUENCY TABLE
FOR USE IN THE PREDICTIVE DATA ENTRY PROCESS
Unpublished © 1995 Libris, Inc.

```
/*   This program opens a text file selected by the
     user, generates the frequency table for that file,
     and then writes the frequency table to another
     file also selected by the user.
*/

#include <stdio.h>
#include <string.h>
#include <console.h>
#include <assert.h>


typedef unsigned char byte;
typedef byte triplet[3];
typedef byte tristorage[27][27][27];

IncrementTrigram(triplet t, tristorage trigrams)
{
  byte * pb;
  assert(t[0] < 27);
  assert(t[1] < 27);
  assert(t[2] < 27);
  pb = &trigrams[t[0]][t[1]][t[2]];
  if (*pb < 255) *pb = *pb + 1;
  return *pb;
}

StoreTrigramValue(triplet t, tristorage trigrams, byte
value)
{
```

<PIDL>	90	args=	C0	alpha	EO
</PIDL>	91	button=	C1	center	E1
<DISPLAY>	92	call=	C2	fade	E2
</DISPLAY>	93	cost=	C3	flipH	E3
<CHOICE>	94	default=	C4	flipV	E4
</CHOICE>	95	flow=	C5	group	E5
<ENTRY>	96	format=	C6	inline	E6
</ENTRY>	97	go=	C7	left	E7
<CE	A0	key=	C8	list	E8
<GE	A1	label=	C9	none	E9
<IMAGE	A2	method=	CA	number	EA
<INLINE	A3	name=	CB	right	EB
<SOFTKEY	A4	next=	CC	slideE	EC
<B>	B0	page=	CD	slideN	ED

-continued

</B>	B1	prev=	CE	slideNE	EE
<I>	B2	src=	CF	slideNW	EF
</I>	B3	ttl=	D0	slideS	F0
<BL>	B4	value=	D1	slideSE	F1
</BL>	B5			slideSW	F2
<CENTER>	B6			slideW	F3
<RIGHT>	B7				
<WRAP>	B8				
<LINE>	B9				
 	BA				

```
    assert(t[0] < 27);
    assert(t[1] < 27);
    assert(t[2] < 27);
    trigrams[t[0]][t[1]][t[2]] = value;
}

byte FetchTrigramvalue(triplet t, tristorage trigrams)
{
    assert(t[0] < 27); .
    assert(t[1] < 27);
    assert(t[2] < 27);
    return trigrams[t[0]][t[1]][t[2]];
}

byte DumpTrigram(triplet t, tristorage trigrams)
{
    byte value;
    assert(t[0] < 27);
    assert(t[1] < 27);
    assert(t[2] < 27);
    value = FetchTrigramValue(t, trigrams);
    if (value != 0)
    {
      printf("%c%c%c = ", t[0] + 'a', t[1] + 'a', t[2] +
'a');
      if (value == 255) printf("***");
      else         printf("%3d", value);
}
 return value;
 }

 int IdFromChar(short c)
 {
  c = tolower(c);
  if (c < 'a' || c > 'z') return 26;
  return c - 'a';
```

```
}

AddChar(tristorage trigrams, triplet t, byte b)
{
  byte value;
  unsigned short r;

  assert(b <= 26);
  if (b == 26) { t[0] = t[1] = t[2] = 26; return; }

  t[0] = t[1];
  t[1] = t[2];
  t[2] = b;

  value = FetchTrigramValue(t, trigrams);
  if (value == 255) return;

#if 0
  if (value > 64) {
    r = Random();
    if (value > 192 && r & OxE000) return;
    else if (value > 128 && r & OxC000) return;
    else if (value > 64 && r & Ox8000) return;
  }
#endif

  StoreTrigramValue(t, trigrams, value + 1);
}

DumpTrigrams(tristorage trigrams)
{
  int i, j, k;
  int x;
  triplet t;
  x = O;
  for (i = 0; i < 26; ++i)
```

```
        for (j = 0; j < 26; ++j)
          for (k = 0; k < 26; ++k)
          {
            byte value;
            t[0] = i;
            t[1] = j;
            t[2] = k;


            value = DumpTrigram(t, trigrams);

            if (value == 0) continue;
            if (++x == 6) {
              printf("\n"); x = 0;
            }
            else
              printf(" ");
          }
    }

    OSErr BuildTrigram(short refNum, tristorage trigrams)
    {
      OSErr err;
      triplet t;
      t[0] = t[1] = t[2] = 26;

      while (true)
      {
        long count = 80;
        char buf[80];
        int i;

        err = FSRead(refNum, &count, buf);
        if (count == 0) return err;
        for (i = 0; i < count; ++i) {
          AddChar(trigrams, t, IdFromChar(buf[i]));
```

```
        }
        if (err) return err;
      }
      return 0;
    }

    Handle OpenTrigrams(void)
    {
      OSErr err;
      OSType type;
      StandardFileReply reply
      short refNum;
      short id;
      Handle h;
      Str63   name;
      tristorage *trigrams;

      type = 'TEXT';
      StandardGetFile(nil, 1, &type, &reply);
      if (!reply.sfGood)   return nil;
      err = FSpOpenDF(&reply.sfFile, fsCurPerm, &refNum);
      if (err) return nil;

      memcpy(name, reply.sfFile.name, sizeof(name));

      h = NewHandle(sizeof(tristorage));


      HLock(h);
      trigrams = (tristorage *)(*h);
      memset(*trigrams, 0, sizeof(tristorage));

      BuildTrigram(refNum, *trigrams);
      FSClose(refNum);
      DumpTrigrams(*trigrams);
      HUnlock(h);
```

```
    type = 'rsrc';
    StandardGetFile(nil, 1, &type, &reply);
    if (!reply.sfGood) return;
    refNum = FSpOpenResFile(&reply.sfFile, fsCurPerm);
    if (refNum == -1) return;
    UseResFile(refNum);

    id = UniquelID('smrt');
    //id = 128;
    AddResource(h, 'smrt', id, name);
    UpdateResFile(refNum);
    FSClose(refNum);
    return h;
  }

  main()
  {
    OSErr   err;
    Handle    h;

    cshow(stdout);
    TEInit();
    InitDialogs(OL);
    InitCursor();
    h = OpenTrigrams();
```

I claim:

1. A two-way data communication system for communication between a computer and a two-way data communication device selected from a group consisting of a cellular telephone, a two-way pager, and a telephone, said two-way data communication system comprising:

a two-way data communication network;

a server computer comprising:

a two-way data communication interface module coupled to said two-way data communication network; and

a server coupled to said two-way data communication interface module;

wherein said server receives a message including a resource locator from said two-way data communication network, and said resource locator includes an address of said server;

said server processes said message using said resource locator; and

said server transmits a response to said message over said two-way data communication network;

a two-way data communication device coupled to said two-way data communication network wherein said two-way data communication device is selected from the group consisting of a cellular telephone, a two-way pager, and a telephone, and further wherein said two-way data communication device further comprises:

a network interface module coupled to said two-way data communication network; and

an client module coupled to said network interface module;

wherein said client module transmits said message including said resource locator to said server over said two-way data communication network; and

said client module processes said response to said message from said server wherein said response includes information for user interaction over said two-way data communication network.

2. A two-way data communication system as in claim 1 wherein said client module further comprises an interpreter wherein said interpreter generates a user interface using information in said response, and said user interface includes at least one user data input option associated with a resource locator.

3. A two-way data communication system as in claim 2 wherein said resource locator associated with said at least one user data input option addresses an object on said server computer.

4. A two-way data communication system as in claim 2 wherein said resource locator associated with said at least one user data input option addresses an object on another server computer coupled to said two-way data communication network.

5. A two-way data communication system as in claim 1 wherein said interpreter includes a plurality of managers including a user interface manager coupled to a display of said two-way data communication device wherein said user interface manager handles interactions with said display.

6. A two-way data communication system as in claim 5 wherein said user interface manager is coupled to a keypad of said two-way data communication device and further wherein said user interface manager handles interactions with said keypad.

7. A two-way data communication system as in claim 6 wherein upon input of data from said keypad, said interpreter generates another message including another resource locator wherein said another resource locator includes said address of said server and said input data.

8. A two-way data communication system as in claim 7 wherein said another resource locator including said address of said server and said input data comprises a uniform resource locator.

9. A two-way data communication system as in claim 1 wherein said response includes a plurality of resource locators and at least one of said plurality of resource locators includes an address to another server coupled to said communication network.

10. A two-way data communication system as in claim 1 wherein said server is a stateless server and upon said server completing transmission of said response, said server completes all processing of said request and retains no state information for said response.

11. A two-way data communication system as in claim 1 wherein upon said server completing transmission of said response, said server maintains state information concerning said message wherein said server utilizes said state information concerning said message in response to another message from said two-way data communication device.

12. A two-way data communication system as in claim 1 wherein said two-way data communication device further comprises:

a memory; and

a resource locator stored in said memory.

13. A two-way data communication system as in claim 1 wherein said server computer further comprises:

a memory; and

at least one common gateway interface program stored in said memory.

14. A two-way data communication system as in claim 1 wherein said server computer further comprises:

a memory; and

at least one card deck stored in said memory.

15. A two-way data communication system as in claim 14 wherein said at least one card deck includes a display card.

16. A two-way data communication system as in claim 14 wherein said at least one card deck includes a choice card.

17. A two-way data communication system as in claim 14 wherein said at least one card deck includes an entry card.

18. A two-way data communication system as in claim 1 wherein said client module further comprises a predictive text entry module.

19. A two-way data communication system as in claim 1 wherein said two-way data communication device further comprises:

a keypad having a plurality of keys; and

a keypad module coupled to said keypad and to said client module

wherein upon a user pressing a key in said plurality of keys, said keypad module stores information identifying the pressed key in a memory; and

said keypad module notifies said client module of said key press.

20. A two-way data communication system as in claim 19 wherein said client module further comprises a predictive data entry module, wherein said client module uses said predictive data entry module to process said stored information identifying the pressed key upon said client module receiving said notification of said key press.

21. A two-way data communication system as in claim 19 wherein said two-way data communication device further comprises:

a card deck stored in said memory of said two-way data communication device.

22. A two-way data communication system as in claim 21 wherein said at least one card deck includes a display card.

23. A two-way data communication system as in claim **21** wherein said at least one card deck includes a choice card.

24. A two-way data communication system as in claim **21** wherein said at least one card deck includes an entry card.

25. A two-way data communication system as in claim **1** wherein said two-way data communication device further comprises:

a display; and

a display module coupled to said display and to said client module wherein said display module drives said display in response to user interface information from said client module.

26. A two-way data communication system as in claim **19** wherein said two-way data communication device further comprises:

a display; and

a display module coupled to said display and to said client module wherein said display module drives said display in response to user interface information from said client module.

27. A two-way data communication system as in claim **1** wherein said two-way data communication device is said cellular telephone.

28. A two-way data communication system as in claim **1** wherein said two-way data communication device is said two-way pager.

29. A two-way data communication system as in claim **1** wherein said two-way data communication device is said telephone.

30. A two-way data communication system for communication between a server computer and a cellular telephone, said two-way data communication system comprising:

a data capable cellular telephone communication network;

a server computer comprising:

a two-way data communication interface module coupled to said data capable cellular telephone communication network; and

a server coupled to said two-way data communication interface module;

wherein said server receives a message including a resource locator from said data capable cellular telephone communication network wherein said resource locator includes an address of said server;

said server processes said message using said resource locator; and

said server transmits a response to said message over said data capable cellular telephone communication network;

a cellular telephone coupled to said data capable cellular telephone communication network wherein said cellular telephone further comprises:

a network interface module coupled to said data capable cellular telephone communication network; and

an client module coupled to said network interface module;

wherein said client module transmits said message including said resource locator to said server over said data capable cellular telephone communication network; and

said client module processes said response to said message from said server wherein said response includes information for user interaction over said data capable cellular telephone communication network.

31. A two-way data communication system as in claim **30** wherein said client module further comprises an interpreter wherein said interpreter generates a user interface using information in said response and further wherein said interface includes at least one user data input option associated with a resource is locator.

32. A two-way data communication system as in claim **31** wherein said resource locator associated with said user data input option addresses an object on said server computer.

33. A two-way data communication system as in claim **31** wherein said resource locator associated with said user data input option addresses an object on another server computer coupled to said data capable cellular telephone communication network.

34. A two-way data communication system as in claim **30** wherein said interpreter includes a plurality of managers including a user interface manager coupled to a display of said cellular telephone wherein said user interface manager handles interactions with said display.

35. A two-way data communication system as in claim **34** wherein said user interface manager is coupled to a keypad of said cellular telephone and further wherein said user interface manager handles interactions with said keypad.

36. A two-way data communication system as in claim **35** wherein upon input of data from said keypad, said interpreter generates another message including another resource locator wherein said another resource locator includes said address of said server and said input data.

37. A two-way data communication system as in claim **36** wherein said another resource locator including said address of said server and said input data comprises a uniform resource locator.

38. A two-way data communication system as in claim **30** wherein said response includes a plurality of resource locators and at least one of said plurality of resource locators includes an address to another server coupled to said communication network.

39. A two-way data communication system as in claim **30** wherein said server is a stateless server and upon said server completing transmission of said response, said server completes all processing of said request and retains no state information for said response.

40. A two-way data communication system as in claim **30** wherein upon said server completing transmission of said response, said server maintains state information concerning said message wherein said server utilizes said state information concerning said message in response to another message from said cellular telephone.

41. A method for using a two-way data communication device, selected from a group consisting of a cellular telephone, a two-way pager, and a telephone, to communicate with a server computer comprising:

generating a message by a client module in response to data entered by said user of a two-way data communication device coupled to a two-way data communication network,

wherein said client module executes on a microcontroller of said two-way data communication device;

said message includes a resource locator; and

said two-way data communication device is selected from a group consisting of a cellular telephone, a two-way pager, and a telephone

transmitting said message over said two-way data communication network to a server computer wherein said server computer is identified by said resource locator;

executing an application on said server computer identified by said resource locator to generate a response to said message; and

transmitting said response to a location identified by said application.

42. A method for using a two-way data communication device, selected from a group consisting of a cellular telephone, a two-way pager, and a telephone, to communicate with a server computer as in claim **41** wherein said response is transmitted to said client module.

43. A method for using a two-way data communication device, selected from a group consisting of a cellular telephone, a two-way pager, and a telephone, to communicate with a server computer as in claim **42** further comprising:

interpreting said response by said client module and generating a user interface using information in said response wherein said interface includes at least one user data input option associated with a resource locator.

44. A method for using a two-way data communication device, selected from a group consisting of a cellular telephone, a two-way pager, and a telephone, to communicate with a server computer as in claim **43** wherein said resource locator associated with said user data input option addresses an object on said server computer.

45. A method for using a two-way data communication device, selected from a group consisting of a cellular telephone, a two-way pager, and a telephone, to communicate with a server computer as in claim **43** wherein said resource locator associated with said user data input option addresses an object on another server computer.

46. A method for using a two-way data communication device, selected from a group consisting of a cellular telephone, a two-way pager, and a telephone, to communicate with a server computer as in claim **43** further comprising:

interpreting a data input entry by a user of said two-way data communication device.

47. A method for using a two-way data communication device, selected from a group consisting of a cellular telephone, a two-way pager, and a telephone, to communicate with a server computer as in claim **46** further comprising:

appending said data input entry to said resource locator associated with said data input entry option.

48. A method for using a two-way data communication device, selected from a group consisting of a cellular telephone, a two-way pager, and a telephone, to communicate with a server computer as in claim **42** wherein said response is a card deck and further wherein said card deck includes at least one card.

49. A method for using a two-way data communication device, selected from a group consisting of a cellular telephone, a two-way pager, and a telephone, to communicate with a server computer as in claim **42** further comprising:

storing said card deck stored in a memory of two-way communication device.

50. A method for using a two-way data communication device, selected from a group consisting of a cellular telephone, a two-way pager, and a telephone, to communicate with a server computer as in claim **49** further comprising:

processing said stored card deck using said client module.

51. A method for using a two-way data communication device, selected from a group consisting of a cellular telephone, a two-way pager, and a telephone, to communicate with a server computer as in claim **50** further comprising:

generating a display on two-way data communication device for each card in said card deck.

52. A method for using a two-way data communication device, selected from a group consisting of a cellular telephone, a two-way pager, and a telephone, to communicate with a server computer as in claim **51** wherein said at least one card is a display card.

53. A method for using a two-way data communication device, selected from a group consisting of a cellular telephone, a two-way pager, and a telephone, to communicate with a server computer as in claim **51** wherein said at least one card is an entry card.

54. A method for using a two-way data communication device, selected from a group consisting of a cellular telephone, a two-way pager, and a telephone, to communicate with a server computer as in claim **51** wherein said at least one card is a choice card.

* * * * *

UNITED STATES PATENT AND TRADEMARK OFFICE

CERTIFICATE OF CORRECTION

PATENT NO. : 5,809,415
DATED : September 15, 1998
INVENTOR(S) : Rossmann

It is certified that error appears in the above-identified patent and that said Letters Patent is hereby corrected as shown below:

Title page,
Item [73], under Assignee, please replace "**Unwired Planet**, **Inc**., Redwood Shores, CA" with -- **Openwave Systems Inc**., Redwood City, CA --.

Signed and Sealed this

Thirteenth Day of August, 2002

Attest:

Attesting Officer

JAMES E. ROGAN
Director of the United States Patent and Trademark Office

UNITED STATES PATENT AND TRADEMARK OFFICE

CERTIFICATE OF CORRECTION

PATENT NO. : 5,809,415
DATED : September 15, 1998
INVENTOR(S) : Alain Rossmann

It is certified that error appears in the above-identified patent and that said Letters Patent is hereby corrected as shown below:

Column 48,
Line 10, replace "08/XXX,XXX" with -- 08/570,384 --.

Signed and Sealed this

Twenty-fourth Day of December, 2002

JAMES E. ROGAN
Director of the United States Patent and Trademark Office