UNITED STATES PATENT AND TRADEMARK OFFICE

BEFORE THE PATENT TRIAL AND APPEAL BOARD

ADVANCED MICRO DEVICES, INC.,
Petitioner

v.

ADVANCED CLUSTER SYSTEMS, INC.,
Patent Owner

IPR2025-00863
Patent No. 10,333,768

BRIEF IN SUPPORT OF PATENT OWNER'S REQUEST FOR DISCRETIONARY DENIAL

TABLE OF CONTENTS

I. INTRODUCTION 1

II. THE *FINTIV* FACTORS AND ADDITIONAL MEMORANDUM FACTORS FAVOR DISCRETIONARY DENIAL 5

A. Factor 1 Weighs Against Institution Because A Stay Has Not Been Granted In The Parallel Litigation And There Is Evidence That A Stay Would Not Be Granted If This IPR Was Instituted 5

B. Factor 2 Weighs Against Institution Because The Trial In The Parallel Litigation Will Occur After The Statutory Deadline For The Board's Final Written Decision For The Other Challenged Patents Asserted In The Parallel Litigation And At Or Around The Same Time As The Statutory Deadline For The Board's Final Written Decision For The Patent Challenged In The Instant Petition 6

C. Factor 3 Weighs Strongly Against Institution Because The District Court And The Parties Will Have Invested Significant Effort In The Parallel Litigation By The Time The Board's Institution Decision Is Due 10

D. Factor 4 Weighs Strongly Against Institution Because There Is Overlap Between This IPR And The Parallel Litigation And The IPR Would Not Be A "True Alternative" To The Parallel Litigation 13

E. Factor 5 Weighs Against Institution Because The Petitioner In This Proceeding Is The Same As The Defendant In The Parallel Litigation 24

F. Factor 6 Weighs Against Institution Because Additional Factors Weigh In Favor Of Discretionary Denial 24

i. The Petition Impermissibly Relies On Conclusory, Speculative, And Unsupported Expert Analysis That Mischaracterizes The Disclosure Of RS/6000 (Memorandum Factors 3 and 4) 24

ii. The Petition Fails To Carry Its Burden That Exhibits 1006-1008 and 1017 Qualify As Printed Publications (Memorandum Factor 3) 30

iii. Settled Expectations Also Favor Discretionary Denial (Memorandum Factor 5) 38

III. *GENERAL PLASTIC* IS NOT RELEVANT TO CONSIDERATION OF THIS REQUEST FOR DISCRETIONARY DENIAL 39

IV. PETITIONER'S JOINDER MOTION ALSO FAVORS DISCRETIONARY DENIAL 41

V. CONCLUSION 43

TABLE OF AUTHORITIES

Page(s)

Cases

Acquis, LLC v. Hon Hai Precision Indus Co. Ltd.,
No. 6:23-cv-264-ADA (W.D. Tex. May 31, 2024) 12

Advanced Cluster Systems, Inc. v. Intel Corporation,
Case No. 7-24-cv-00245-ADA (W.D. Tex.) 2

Advanced Micro Devices, Inc. v. Concurrent Ventures, LLC,
IPR2025-00223, Paper 9 (PTAB Jun. 12, 2025) 7, 42

Alcatel-Lucent USA Inc. v. Oyster Optics, LLC,
IPR2017-02146, Paper 12 (PTAB Feb. 28, 2018) 40

Allani v. Apple Inc.,
No. 6:24-cv-304-ADA (W.D. Tex. May 6, 2025) 12

In re Am. Acad. of Sci. Tech Ctr.,
367 F.3d 1359 (Fed. Cir. 2004) 29

Apple Inc. v. Fintiv, Inc.,
IPR2020-00019, Paper 11 (PTAB March 20, 2020) ..... *passim*

Apple Inv. v. Fintiv,
IPR2020-0019, Paper 15 (PTAB May 13, 2020) 24

Argentum Pharm. v. Research Corp. Tech. Inc.,
IPR2016-00204, Paper 19 (PTAB May 23, 2016) 33, 37

ARM Ltd. v. Daedalus Prime LLC,
IPR2025-00207, Paper 10 (PTAB May 16, 2025) 7, 42

Content Square SAS v. Medallia Inc.,
IPR2022-00316, Paper 13 (PTAB July 14, 2022) 30

In re Cronyn,
890 F.2d 1158 (Fed. Cir. 1989) 32

Dabico Airport Sols. Inc. v. Axa Power Aps,
IPR2025-00408, Paper 21 (PTAB Jun. 18, 2025) 38, 39

Gen. Plastic Indus. Co. v. Cannon Kabushiki Kaisha,
IPR2016-01357, Paper 19 (PTAB Sept. 6, 2017).....40

Hulu, LLC v. Sound View Innovations, LLC,
IPR2018-01039, Paper 29 (PTAB Dec. 20, 2019) 30, 31

Ingenico Inc. v. Ioengine, LLC.,
No. 2023-1367, 2025 WL 1318188 (Fed. Cir. May 7, 2025).....3, 6, 17

Intel Corp. v. Advanced Cluster Systems, Inc.,
IPR2025-00795, Paper 8 (Jun. 17, 2025) 1, 2

Intellectual Ventures I LLC v. TCL Elects. Holdings Ltd.,
No. 6:23-cv-309-ADA (W.D. Tex. Sept. 10, 2024) 12

Medivis, Inc. v. Novard Corp.,
IPR2023-00042, Paper 35 (PTAB Mar. 6,2024) 36

Motorola Sols., Inc. v. Stellar, LLC,
IPR2024-01205, Paper 19 (PTAB Mar. 28, 2025) 13, 18, 23

Samsung Elec. Co., LTD v. Sionyx, LLC,
IPR2025-00065, Paper 16 (PTAB Jun. 6, 2025) 17, 18, 23, 34

Samsung Elecs. Co. v. Infobridge Pte. Ltd.,
929 F.3d 1363 (Fed. Cir. 2019) 34, 35

SAP Am., Inc. v. Cyandia, Inc.,
IPR2024-01432, Paper 14 (PTAB Apr. 7, 2025) 17, 23, 24

Shenzen Tuozhu Tech. Co., Ltd. v. Stratasys, Inc.,
IPR2025-00354, Paper 11 (PTAB Jun. 12, 2025) 7, 18

Sportradar AG v. Sportscaster Inc.,
IPR2025-00265, Paper 19 (PTAB Jun. 25, 2025) 41, 43

SRI Int'l, Inc. v. Internet Sec. Sys., Inc.,
511 F.3d 1186 (Fed. Cir. 2008) 4, 30, 35

TCL Elec. Holdings LTD v. Maxell, LTD,
IPR2025-00135, Paper 9 (PTAB May 20, 2025) 14

Toshiba America Information Systems, Inc. et al. v. Walletex Microelectronics Ltd.,
IPR2018-01538, Paper 11 (PTAB Mar. 5, 2019) 40

Upjohn Co. v. Mova Pharm. Corp.,
225 F.3d 1306 (Fed. Cir. 2000) 25

Velander v. Garner,
348 F.3d 1359 (Fed. Cir. 2003) 29

Western Dig. Corp. v. Spex Tech., Inc.,
IPR2018-00084, Paper 14 (PTAB Apr. 25, 2018) 40

In re Wyer,
655 F.2d, 221, 227 (CCPA 1981) 31

Statutes

35 U.S.C. § 102 16

35 U.S.C. § 311(b) ..... *passim*

35 U.S.C. § 316(a)(11) 10

Other Authorities

37 C.F.R. § 42.65(a) 25

Fed. R. Evid. §§ 801-802 36

Fed. R. Evid. § 803 36

Fed. R. Evid. §§ 901-902 36

PATENT OWNER'S EXHIBIT LIST

Exhibit	Description
2001	DocketNavigator Statistics for Motion Success for Stay Pending IPR (Post-Institution) for Judge Albright
2002	J. Albright Standing Order Governing Proceedings (OGP) 4.4 – Patent Cases (Jan 23, 2024)
2003	DocketNavigator Statistics for Time-to-Milestones for Judge Albright
2004	*Advanced Cluster Systems, Inc. v. Advanced Micro Devices, Inc.*, Scheduling Order (D.I. 36)
2005	*Allani v. Apple Inc.*, No. 6:24-cv-304-ADA (W.D. Tex. May 6, 2025) (D.I. 30)
2006	*Intellectual Ventures I LLC v. TCL Elects. Holdings Ltd.*, No. 6:23-cv-309-ADA (W.D. Tex. Sept. 10, 2024) (D.I. 44)
2007	*Acquis, LLC v. Hon Hai Precision Indus Co. Ltd.*, No. 6:23-cv-264-ADA (W.D. Tex. May 31, 2024) (D.I. 46)
2008	AMD's Preliminary Invalidity and Subject-Matter Eligibility Contentions Cover Pleading (Corrected Apr. 23, 2025)
2009	AMD's Preliminary Invalidity Contention – Chart A-8
2010	Declaration of Dr. Melissa C. Smith Under 37 C.F.R. § 1.68
2011	*Curriculum Vitae* of Dr. Melissa C. Smith
2012	AMD Feb. 5, 2025 – 10-K Annual Report

I. INTRODUCTION

Advanced Cluster Systems, Inc. ("Patent Owner") respectfully submits this brief requesting that the Director deny institution of the Petition for *inter partes* review ("Pet.") filed by Petitioner Advanced Micro Devices, Inc. ("Petitioner") pursuant to the Acting Director's March 26, 2025, Memorandum on "Interim Processes for PTAB Workload Management" (the "Memorandum").

Petitioner admits that this petition "challenges the same claims, on the same grounds, and relies on the same prior art" in IPR2025-00795 filed by Intel Corporation. *See* IPR2025-00863, Paper 4 at 1 (Motion for Joinder). In other words, this petition is a copycat of Intel's petition. On June 17, 2025, Patent Owner filed a Request for Discretionary Denial in IPR2025-00795. *Intel Corp. v. Advanced Cluster Systems, Inc.*, IPR2025-00795, Paper 8 (Jun. 17, 2025). For the same reasons identified in Patent Owner's Request for Discretionary Denial filed in that case, as well as the additional reasons identified herein, based on intervening Board decisions, the Board should exercise its discretion and deny this position.

The Petition seeks *inter partes* review of claims 26-29 and 35-39 of U.S. Patent No. 10,333,768 (the "'768 Patent," Ex. 1001). Petitioner has filed a second IPR challenging claims 1-25 and 30-34 of the '768 Patent. Pet. at 16; *see also* IPR2025-00862, Pet. at 16. The '768 Patent and four other patents are the subject of a patent infringement action that Patent Owner has initiated against Petitioner that

is currently pending in the Western District of Texas, Case No. 7:24-cv-244-ADA (the "Parallel Litigation").[1] Petitioner has also filed, jointly with Intel, four additional IPR petitions against the other patents asserted in the Parallel Litigation.[2] By Petitioner's own tactics it seeks to break up a single proceeding pending in the District Court into separate spaced apart proceedings before the PTAB – this is anything but efficient. As explained more fully below, the *Fintiv* factors, as well as additional factors identified in the Memorandum, favor discretionary denial.

First, with respect to the *Fintiv* factors, the Petition should be denied because: (1) a stay has not been granted in the Parallel Litigation and there is evidence that a stay would not be granted if this IPR is instituted, (2) the jury trial in the Parallel Litigation will occur before the projected statutory deadline of the four related patents challenged by the Petitioner, and the projected statutory deadline for the instant Petition will occur at or around the same time as the trial for the Parallel Litigation, meaning factors three and four below must also be considered, each of

---

[1] The '768 Patent is also asserted against Intel Corporation ("Intel") in *Advanced Cluster Systems, Inc. v. Intel Corporation*, Case No. 7-24-cv-00245-ADA (W.D. Tex.). *See* IPR2025-00863, Paper 8 at 2 ("PO Mandatory Notices"). Intel has filed two IPR Petitions against the '768 Patent. *Id.* (IPR2025-00794, -00795). These IPRs rely on the same prior art and assert the same grounds that are asserted by Petitioner in this Petition and its IPR2025-00862 Petition. Patent Owner has filed substantively similar discretionary denial briefs in each of IPR2025-00794 and -00795. *See* IPR2025-00794, Paper 8; IPR2025-00795, Paper 8.

[2] *See Id.* at 3 (IPR Nos. IPR2025-00913, IPR2025-00914, IPR2025-00915, and IPR2025-00916).

which strongly favor the Board exercising its discretion to deny institution, (3) by the time of the institution decision, the Parties and the District Court will have invested significant effort into the Parallel Litigation, (4) there is substantial overlap in the prior art that Petitioner has asserted in the Petition and in the Parallel Litigation, including the same purported printed publications, in addition to unpublished system prior art, resulting in needless duplication of proceedings that would not be a "true alternative" to the Parallel Litigation,[3] and (5) there is complete overlap between the Parties in this IPR and the Parallel Litigation.

Second, the strength of the Petition is weak because Petitioner's expert's declaration advances a conclusory, speculative, and factually unsupported analysis that mischaracterizes the disclosure of the RS/6000 reference (Ex. 1007) as describing a hardware processor with *a plurality of processing cores* – a requirement of all of the challenged claims. The RS/6000 reference discloses no such thing, and Petitioner's conclusory expert testimony simply cannot create disclosure that is not there. Such a failure is fatal to the Petition, because Petitioner has not carried its burden to establish a reasonable likelihood that it will prevail in showing that all of

[3] Petitioner's *Sotera* stipulation will have little to no practical effect here, as Petitioner has made clear that it intends to rely on *the same prior art* in the Parallel Litigation that it identified in the Petition. Reliance in the district court on the same prior art raised in an IPR petition, in combination with system prior art, was recently endorsed by the Federal Circuit in *Ingenico Inc. v. Ioengine, LLC. See* No. 2023-1367, 2025 WL 1318188, at *7 (Fed. Cir. May 7, 2025).

the elements of at least one claim are present in the asserted combination of prior art.

Third, the strength of the Petition is also weak at least because all of the petitioned grounds rely on exhibits that the Petitioner has failed to establish qualify as printed publications. The primary references upon which the Petition relies (exhibits 1006-1008 and 1017) for its invalidity arguments are online references. An online reference qualifies as a "printed publication" only if it can be proved that the online reference was "disseminated or otherwise made available to the extent that persons interested and ordinarily skilled in the subject matter or art exercising reasonable diligence, can locate it." *SRI Int'l, Inc. v. Internet Sec. Sys., Inc.*, 511 F.3d 1186, 1194 (Fed. Cir. 2008) (citation omitted). For exhibits 1006-1008 and 1017, the Petition contains no catalog or database indexing records, no librarian declaration or contemporaneous library system listings, and no evidence of searchability by search strings likely to be composed by the public. Simply put, the Petition offers no evidence to establish that as of the critical date an interested member of the public would have been aware of or been able to locate these documents by exercising reasonable diligence. Petitioner's attempt to infer public availability through additional exhibits (Exs. 1035 and 1037) is likewise unavailing, as these exhibits are unauthenticated inadmissible hearsay.

Finally, based on recently issued Orders denying institution pertaining to settled expectations and joinder, the Board should deny institution here.

For all these reasons the Board should exercise its discretion and deny institution.

II. THE *FINTIV* FACTORS AND ADDITIONAL MEMORANDUM FACTORS FAVOR DISCRETIONARY DENIAL

The precedential order in *Apple Inc. v. Fintiv, Inc.*, IPR2020-00019, Paper 11 (PTAB March 20, 2020) ("*Fintiv*") identifies six factors for the Board to consider in deciding whether to exercise discretion to deny institution based on parallel proceedings involving the same patent. The Director's recently issued Memorandum identifies additional factors that Patent Owner addresses below in connection with *Fintiv* factor six. Application of the present facts to these factors demonstrates that the Board should exercise its discretion and deny institution here.

A. Factor 1 Weighs Against Institution Because A Stay Has Not Been Granted In The Parallel Litigation And There Is Evidence That A Stay Would Not Be Granted If This IPR Was Instituted

No stay has been requested in the Parallel Litigation. Pet. at 98. In addition, even if this IPR was instituted it is unlikely that the District Court (Judge Albright) would grant a stay. Indeed, Judge Albright has denied twenty-three of thirty-one opposed motions (74%) to stay pending IPR since 2019. *See* Ex. 2001. Nor would a stay make sense here since, as explained below in Section II.D, Petitioner intends to litigate *the same prior art* in the Parallel Litigation that it is advancing here and

the Federal Circuit's decision in *Ingenico* confirms that there will be no simplification of issues in the Parallel Litigation even if this IPR is instituted. *See Ingenico*, 2025 WL 1318188, at *7.

Thus, the first factor weights in favor of the Board exercising its discretion against institution.

B. Factor 2 Weighs Against Institution Because The Trial In The Parallel Litigation Will Occur After The Statutory Deadline For The Board's Final Written Decision For The Other Challenged Patents Asserted In The Parallel Litigation And At Or Around The Same Time As The Statutory Deadline For The Board's Final Written Decision For The Patent Challenged In The Instant Petition

The trial in the Parallel Litigation is scheduled to begin on November 16, 2026. Ex. 2004 at 3. The District Court has stated that "[a]fter the trial date is set, the Court will not move the trial date except in extreme situations." *See* Ex. 2002 at 9 (General Issue 6).

The patent that is the subject of the present Petition, the '768 Patent, is one of five total patents asserted in the Parallel Litigation against Petitioner that are all within the same patent family, all share the same specification, and all involve the same subject matter. All five patents are also asserted against Intel in a litigation that is also pending before the same District Court Judge. *See* PO Mandatory Notices at 2-3. Both Petitioner and Intel have filed IPR Petitions against all five patents. *See id.* The petitions that Petitioner and Intel jointly filed against the other four patents

(IPR2025-00913, -00914, -00915, and -00916), were filed on April 29, 2025, *id.*, and the statutory deadline for issuing a final written decision in those proceedings is November 27, 2026 – *after* the Parallel Litigation's trial date. This delay is entirely the result of Petitioner (and Intel) electing to delay the filing of its four additional petitions by nearly a month. Given the District Court's standing order about holding true to trial dates once they are set, it is unlikely that a final written decision will issue in those proceedings before the trial in the Parallel Litigation. *See Shenzen Tuozhu Tech. Co., Ltd. v. Stratasys, Inc.*, IPR2025-00354, Paper 11 (Decision of the Acting Director) at 2 (PTAB Jun. 12, 2025) (exercising discretion to deny institution where "it will be inefficient to maintain two parallel proceedings when the district court scheduled trial date and the projected final written decision due date are close in proximity"); *see also Advanced Micro Devices, Inc. v. Concurrent Ventures, LLC*, IPR2025-00223, Paper 9 (Decision of the Acting Director) at 2 (PTAB Jun. 12, 2025) (exercising discretion to deny institution and reasoning that "[e]ven though a district court trial date that occurs after a projected final written decision date reduces the possibility of conflicting decisions, that benefit does not outweigh the efficiencies gained by avoiding parallel proceedings in this instance because of the parties' meaningful investment in the district court proceeding"); *ARM Ltd. v. Daedalus Prime LLC*, IPR2025-00207, Paper 10 (Decision of the Acting Director) at 2 (PTAB May 16, 2025) (exercising discretion to deny institution where trial may occur just

one-month before issuance of the final written decision). It would make little sense and be inefficient to institute the instant petition against the '768 Patent, when there is a strong indication that the District Court will still conduct a trial on the four other patents asserted in the Parallel Litigation. This alone weighs in favor of the Board exercising its discretion against institution.

Beyond the issues raised by Petitioner's delay in filing its four additional IPRs, the statutory deadline for issuing a final written decision for this Petition is November 16, 2026. This is the same day the trial in the Parallel Litigation will begin. As *Fintiv* outlines, "[i]f the court's trial date is at or around the same time as the projected statutory deadline or even significantly after the projected statutory deadline, the decision whether to institute will likely implicate other factors discussed herein, such as the resources that have been invested in the parallel proceeding." *Fintiv*, IPR2020-00019, Paper 11 at 9 (citing factors 3 and 4).

Given that the Parallel Litigation trial date and projected final written decision date are the same, it is inappropriate to evaluate this factor solely based on these dates and without consideration of the third and fourth factors. *See Fintiv*, IPR2020-00019, Paper 11 at 9. As explained below, the third factor strongly weighs against institution because by the time of the projected institution date, the District Court and the Parties will have invested substantial resources into the Parallel Litigation. *See infra* at 10-13. Additionally, with respect to the fourth factor there is complete

overlap between invalidity references asserted in the instant Petition to challenge the validity of the ’768 Patent and those asserted in the Parallel Litigation – overlap that Petitioner’s *Sotera* declaration simply cannot overcome – given Petitioner’s reliance in the Parallel Litigation on the same purported printed publications that are the subject of the instant Petition in addition to unpublished system prior art. *See infra* at 13-23.

Petitioner’s suggestion that the trial will begin in July 2027 (instead of the actual scheduled date in October 2026) is not supported by its own cited statistics from the Western District of Texas. Pet. at 95. According to trial statistics in the Western District of Texas, the median time-to-trial for a jury patent infringement case before Judge Albright (the judge in the Parallel Litigation) is 25.9 months after the filing of the original complaint (Ex. 2003). Applying this median time-to-trial to the Parallel Litigation, which was filed on September 26, 2024, would result in a projected trial in late November 2026 – still “at or around the same time as the projected statutory deadline.” *Fintiv*, IPR2020-00019, Paper 11 at 9. That the median time-to-trial for Judge Albright is only days after the actual scheduled trial date also confirms that the scheduled date is realistic, unlike Petitioner’s manufactured date of July 2027.

Taking into consideration the currently scheduled (and realistic) trial date for the Parallel Litigation, as well as the unlikelihood that the date will change, the

efficiency of having the District Court address the validity of the ’768 Patent and the other asserted patents in the same proceeding, and the strength of the third and fourth *Fintiv* factors, discussed below, factor 2 weighs in favor of the Board exercising its discretion against institution.

C. Factor 3 Weighs Strongly Against Institution Because The District Court And The Parties Will Have Invested Significant Effort In The Parallel Litigation By The Time The Board’s Institution Decision Is Due

This factor relates to the “amount and type of work already completed in the parallel litigation by the court and the parties at the time of the institution decision” (and not at the time of the Petition as suggested by Petitioner). *Fintiv* at 9. The institution decision is due on October 17, 2025. 35 U.S.C. § 316(a)(11). By that time, the parties and the District Court will have invested significant efforts and resources in construing the claims at issue in the Petition, including completing claim construction briefing, conducting a *Markman* hearing and likely issuing a corresponding ruling on claim construction, and the parties will have finalized and served infringement and invalidity contentions. More specifically, by that time, all of the following will have been completed in the Parallel Litigation:

1. Patent Owner’s Preliminary Infringement Contentions (served Feb. 24, 2025);
2. Petitioner’s Preliminary Invalidity Contentions (served Apr. 21, 2025);
3. Exchange of claim terms for construction (May 5, 2025);

4. Exchange of proposed claim constructions (May 19, 2025);
5. Disclosure of extrinsic evidence for claim construction (May 27, 2025);
6. Patent Owner's First Supplemental Infringement Contentions (served June 20, 2025);
7. Petitioner's Opening Claim Construction Brief (June 9, 2025);
8. Patent Owner's Responsive Claim Construction Brief (June 30, 2025);
9. Petitioner's Reply Claim Construction Brief (July 21, 2025[4]);
10. Patent Owner's Sur-Reply Claim Construction Brief (Aug. 1, 2025);
11. Parties' Joint Claim Construction Statement submitted to the Court (Aug. 1, 2025);
12. Parties' technical tutorials submitted to the Court (Aug. 4, 2025);
13. *Markman* Hearing (Aug. 12, 2025);
14. *Markman* Ruling (expected August 12-13, 2025, as Judge Albright typically issues a claim construction ruling the day of the Markman hearing or the next day, and a written order within a few weeks);
15. Opening of fact discovery (Aug. 13, 2025); and
16. Final Infringement and Invalidity Contentions (Oct. 8, 2025).

Ex. 2004. In addition, by the time of the *Markman* Hearing, "[t]he Court will [have] provide[d] preliminary constructions to the parties . . . ." Ex. 2002 at 9 (Para 2). *See Fintiv* at 9-10 ("if, at the time of the institution decision, the district court has issued

[4] Reply and sur-reply deadlines extended from original date by Parties' agreement.

substantive orders related to the patent at issue in the petition, this fact favors denial.”).

Moreover, District Court Judge Albright typically issues a final claim construction ruling shortly after the *Markman* hearing. *See, e.g.*, Ex. 2005, *Allani v. Apple Inc.*, No. 6:24-cv-304-ADA, at 1 (W.D. Tex. May 6, 2025) (order memorializing final claim construction issued 4 days after the *Markman* hearing); Ex. 2006, *Intellectual Ventures I LLC v. TCL Elects. Holdings Ltd.*, No. 6:23-cv-309-ADA, at 1 (W.D. Tex. Sept. 10, 2024) (order memorializing final claim construction issued 1 day after the *Markman* hearing); Ex. 2007, *Acquis, LLC v. Hon Hai Precision Indus Co. Ltd.*, No. 6:23-cv-264-ADA, at 1 (W.D. Tex. May 31, 2024) (order memorializing final claim construction issued the day of the *Markman* hearing). It is likely that the Court will issue its claim construction order as to all five asserted patents prior to the expected date of the Institution Decision. *See Fintiv*, IPR2020-00019, Paper 11 at 10 (“[D]istrict court claim construction orders may indicate that the court and parties have invested sufficient time in the parallel proceeding to favor denial.”).

Petitioner’s assertion that “[t]he investment in the co-pending litigation is minimal” *at the time the Petition* was filed is irrelevant. Pet. at 95. Petitioner is using the incorrect date to measure the effort invested in the Parallel Litigation. When this factor is evaluated in the correct context – *as of the projected institution*

date in October 2025 – Petitioner's statement that no *Markman* briefing has occurred plainly is false.

The investment in the Parallel Litigation here is analogous to *Motorola Sols., Inc. v. Stellar, LLC*, where the Acting Director found that, among other activities, the parties having "served extensive infringement and invalidity contentions," "filed claim construction briefs," and "[t]he court also held a claim construction hearing and construed the disputed claims terms" amounted to "substantial time and effort the parties and the district court had invested in the parallel proceeding" such that *Fintiv* factor 3 strongly weighed against institution. IPR2024-01205, Paper 19 at 3 (PTAB Mar. 28, 2025).

Therefore, just as in *Motorola Sols.*, *Fintiv* factor three weighs strongly against institution here.

D. Factor 4 Weighs Strongly Against Institution Because There Is Overlap Between This IPR And The Parallel Litigation And The IPR Would Not Be A "True Alternative" To The Parallel Litigation

"[I]f the petition includes the same or substantially the same claims, grounds, arguments, and evidence as presented in the parallel proceeding, this fact has favored denial." *Fintiv* at 12. In the Parallel Litigation, Patent Owner has asserted infringement of claims 1, 4, 20, 21, 26, 27, 29, 30, 31, 33, 34, 35, 36, 37, and 39. Ex. 2008 at 5. The instant IPR petition in combination with concurrently filed petition IPR2025-00862 challenges all of those claims. Pet. at 16; *see also* IPR2025-

00862 Pet. at 16. There is complete overlap between the claims raised in the Parallel Litigation and the combination of the instant IPR Petition, and the concurrently filed IPR2025-00862 petition.

Fintiv states that "if a petition involves the same prior art challenges but challenges claims in addition to those that are challenged in the district court, it may still be inefficient to proceed because the district court may resolve validity of enough overlapping claims to resolve key issues in the petition." *Fintiv* at 13. In this case, 15 of the 39 claims asserted in the two IPRs are challenged in the Parallel Litigation. All of the additional claims asserted in the IPRs depend from one of independent claims 1, 26, or 35, all of which are asserted in the Parallel Litigation. Thus, the District Court would resolve enough overlapping claims to resolve key issues in the petitions. *See TCL Elec. Holdings LTD v. Maxell, LTD*, IPR2025-00135, Paper 9 at 19 (PTAB May 20, 2025) (finding 15 additional claims in IPR only "very slightly" weighed in favor of institution when all 15 of those claims depend directly or indirectly from the 5 claims asserted in Parallel Litigation). Accordingly, for this and the additional reasons discussed below, it would be inefficient to institute the instant IPR when the District Court is better suited to address all of the invalidity issues and the IPR would not be a "true alternative" to the Parallel Litigation.

Further, Petitioner has asserted and plans to litigate the same prior art references in the Parallel Litigation as raised in the Petition (in combination with system art). *Compare* Pet. at 16 (identifying two grounds based on: (i) Menon in view of Trefethen, RS/6000, and POFref, and (ii) the same references further in view of MPIref) *with* Ex. 2009 (AMD's Preliminary Invalidity Contentions, Exhibit A-8 at 1-2 (identifying documents Trefethen et al., Menon, RS/6000, POFref, and MPI: *A Message-Passing Interface Standard*, May 5, 1994 ("MPI Standard 1994"), what AMD refers to as MPIref in the instant Petition). Thus, there is complete overlap between invalidity references asserted in the instant Petition to challenge the validity of the '768 Patent and those asserted in the Parallel Litigation.

Moreover, in view of the Federal Circuit's *Ingenico* decision, Petitioner's *Sotera* stipulation will not mitigate any overlap with the Parallel Litigation because Petitioner intends to litigate the same prior art in the Parallel Litigation that it raises here. Thus, for example, the *Sotera* stipulation: (1) will not prevent the Petitioner from presenting duplicative arguments that the MultiMATLAB system alone or in combination with the same references presented in this Petition render any of the challenged claims invalid and (2) will not ensure that the IPR would be a "true alternative" to the Parallel Litigation because the Petitioner's invalidity contentions in the Parallel Litigation are much more expansive than the grounds presented in this Petition.

Petitioner's *Sotera* stipulation states that Petitioner "will not pursue an invalidity defense in the [Parallel Litigation] that the claims subject to the instituted IPR are invalid based on grounds that were raised or reasonably could have been raised during the IPR (*i.e.*, any ground that could have been raised under 35 U.S.C. § 102 or 103 on the basis of prior art patents or printed publications)." Ex. 1042 at 2. But Petitioner's *Sotera* stipulation explicitly reserves the right in the Parallel Litigation "to assert invalidity of any claims of the asserted patents in this litigation based on *any other ground*." *Id.* (emphasis added). Notably, this includes grounds relying on *the same prior art raised in the Petition*.

For example, the Cornell University MultiMATLAB system art (redbox annotated below) is system art corresponding to the references that form Petitioner's invalidity grounds in the instant petition. *See* Ex. 2009 at 1 ("The MultiMATLAB system ('MultiMATLAB') was available no later than November 1997"); *see id.* ("MultiMATLAB, and the printed publications related to MultiMATLAB, anticipate and/or render obvious, alone or in combination with other references, each of the Asserted Claims of the '768 patent as described in the chart . . . ."). Petitioner's distinguishing the MultiMATLAB system from the purported printed publications describing the same, confirms that Petitioner intends to rely, at least in part, on the prior art MultiMATLAB system in the Parallel Litigation as an invalidity theory.

In this respect, this case in analogous to *SAP America, Inc.* where the Board found "the [*Sotera*] stipulation has limited practical effect in reducing the overlapping efforts here and in the Texas litigation. Petitioner's *Sotera* stipulation would not prevent Petitioner from asserting invalidity based on public use or sale of the [] system. Although such an invalidity challenge would be based on the system rather than publications about the system, the same publications asserted here describe how that system operated." *See SAP Am., Inc. v. Cyandia, Inc.*, IPR2024-01432, Paper 14 at 9-10 (PTAB Apr. 7, 2025); *see also Samsung Elec. Co., LTD v. Sionyx, LLC*, IPR2025-00065, Paper 16 at 14 (PTAB Jun. 6, 2025). In that case, the Board found the *Sotera* stipulation would not ensure that the IPR would be a "true alternative" to the parallel litigation and found that factor four favored discretionary denial.

Moreover, as the Federal Circuit recently explained, "IPR estoppel does not preclude a petitioner from asserting the same prior art raised in an IPR in district court, but rather precludes a petitioner from asserting grounds that were raised or reasonably could have been raised during an IPR." *Ingenico*, 2025 WL 1318188, at *7. Grounds based on system prior art do not fall within the scope of an IPR. *Id.* at 6. As such, "IPR estoppel does not preclude a petitioner from relying on *the same patents and printed publications* as evidence in asserting a ground that could not be raised during the IPR, such as that the claimed invention was known or used by

others, on sale, or in public use." *Id.* at 14 (emphasis added). That is exactly what Petitioner intends to do here – rely on *the same patents and purported printed publications in the Parallel Litigation that it relies on in the Petition*, albeit "repackaged" as grounds based on *system prior art* that happens to be described by the publications, rather than grounds affirmatively based on the publications themselves.

Further, "Petitioner's invalidity arguments in the district court [ ] are more expansive" than those advanced in the instant petition including unpublished system prior art and or that unpublished system prior art in combination with the prior art asserted in these proceedings. *See Shenzen Tuozhu Tech.*, IPR2025-00354, Paper 11 at 2; *see also Motorola Sols.,* IPR2024-01205, Paper 19 at 4; *Samsung Elec.*, IPR2025-00065, Paper 16 at 15 (finding factor four weighed strongly in favor of discretionary denial where *Sotera* stipulation did not ensure that IPR would be a "true alternative" because Petitioner's invalidity arguments in the district court were more expansive and included combinations of the prior art asserted in the IPR with unpublished system prior art, which petitioner's stipulation is not likely to moot). In Petitioner's Preliminary Invalidity and Subject-Matter Eligibility Contentions served in the Parallel Litigation, Petitioner identifies 38 different prior art products and systems.

3. **Table 3: Prior Art Products and Systems**[5]

Name	Developer, Provider, or Manufacturer[6]	Short Name	Date in Public Use, on Sale, or Otherwise Available to the Public[7]
PVMaple	Western University of Timișoara	PVMaple	Sept. 2005
Distributed Maple	Johannes Kepler University	Distributed Maple	Mar. 2003
Matlab*P	Massachusetts Institute of Technology	Matlab*P	Aug. 2002
Fastest Fourier Transform in the West with Message-Passing Interface	Massachusetts Institute of Technology	FFTW	March 2003
Intel Paragon Maple	ETH Zürich	Intel Paragon Maple	Oct. 1996
Stony Brook GPU Cluster for High Performance Computing	Stony Brook University	Stony Brook	Nov. 2004
AppleSeed-Pooch System	University of California, Los	AppleSeed-Pooch	Jan. 2000

Name	Developer, Provider, or Manufacturer[6]	Short Name	Date in Public Use, on Sale, or Otherwise Available to the Public[7]
	Angeles / Dauger Research		
MultiMATLAB	Cornell University	MultiMATLAB	Nov. 1997
Microsoft Windows Compute Cluster Server 2003 System	Microsoft Corporation	CCS	June 2006
Supercomputing Engine for Mathematica System	Advanced Cluster Systems / Dauger Research	SEM	July 2006
Brook and Merrimac System	Stanford University	Merrimac	Apr. 2006
Whitney Commodity Computing Testbed	NASA Ames Research Center	Whitney	Oct. 1997
MatlabMPI from MIT	Massachusetts Institute of Technology	MatlabMPI	Jan. 2003
pyMPI	Lawrence Livermore National Laboratories	pyMPI	July 2005
IBM Blue Gene system	IBM and Lawrence Livermore National Laboratory	IBM Blue Gene	Sept. 2004
Beowulf-style cluster	Forrest M. Hoffman and William W. Hargrove at Oak Ridge National Laboratory	**Hoffman Beowulf**	1999
The Beowulf project (http://www.beowulf.org/)	NASA	NASA Beowulf	1995
Transputer	INMOS	Transputer	Oct. 1985
iWarp	Intel / Carnegie Mellon University	iWarp	May 1990
pMatlab	Massachusetts Institute of Technology	pMatlab	June 2006

Name	Developer, Provider, or Manufacturer[6]	Short Name	Date in Public Use, on Sale, or Otherwise Available to the Public[7]
Cornell Multitask Toolbox for Matlab	Cornell University	CMTM	July 2000
PVMTB/MPITB	Universidad de Granada	PVMTB/MPITB	June 2002
MATmarks	University of Illinois Urbana-Champaign	MATmarks	Aug. 1999
MATLAB*G	National University of Singapore	MATLAB*G	Jan. 2004
Scalable POWERParallel	IBM	IBM SP	Feb. 1993
Cray T3E	Cray Research / SiliconGraphics	T3E	Nov. 1995
Network of Workstations	University of California, Berkeley	NOW	Mar. 1995
High Performance Virtual Machines	University of Illinois Urbana-Champaign	HPVM	July 2002
ASCI Red	Intel / Sandia National Laboratories	ASCI Red	June 1997
Computational Plant	Sandia National Laboratories	Cplant	June 2001
Pastry Distributed Hash Table	Microsoft Research	Pastry	Nov. 2001
Tapestry Distributed Hash Table	University of California, Berkeley	Tapestry	Jan. 2004
Chord Distributed Hash Table	Massachusetts Institute of Technology	Chord	Aug. 2001
Content-Addressable Network Distributed Hash Table	University of California, Berkeley	CAN	Aug. 2001
Shared and Remote memory access based Universal Matrix	Pacific Northwest National Laboratory	SRUMMA	Apr. 2004

Name	Developer, Provider, or Manufacturer[6]	Short Name	Date in Public Use, on Sale, or Otherwise Available to the Public[7]
Multiplication Algorithm			
Image Understanding Architecture	University of Massachusetts	IUA	September 1991
IBM Victor System	IBM	IBM Victor	1987
The NYU Ultracomputer	New York University	NYU Ultracomputer	1983

Ex. 2008 at 123-126 (highlighting and redbox annotation added). Petitioner's preliminary invalidity contentions further provide the following table of claim charts against the '768 Patent.

Claim Charts for the '768 Patent

Exhibit	Primary Reference and/or System Prior Art for the '768 Patent
A-1	PVMaple
A-2	Distributed Maple
A-3	Matlab*P
A-4	Fastest Fourier Transform in the West with Message-Passing Interface ("FFTW")
A-5	Intel Paragon Maple
A-6	Stony Brook GPU Cluster for High Performance Computing ("Stony Brook")
A-7	AppleSeed-Pooch System ("AppleSeed-Pooch")
A-8	MultiMATLAB
A-9	Microsoft Windows Compute Cluster Server 2003 System ("CCS")
A-10	Supercomputing Engine for Mathematica System ("SEM")
A-11	Brook and Merrimac System ("Merrimac")
A-12	Whitney Commodity Computing Testbed ("Whitney")
A-13	MatlabMPI from MIT ("MatlabMPI")
A-14	Abdennadher, N., & Boesch, R. (2005). A large scale distributed platform for high performance computing. In H. Zhuge & G. C. Fox (Eds.), Grid and Cooperative Computing - GCC 2005 (Vol. 3795, pp. 926–931). Springer. ("Abdennadher")
A-15	pyMPI
A-16	IBM Blue Gene
A-17	U.S. Patent No. 8,726,278 ("Shawver")
A-18	"High Performance Computing: An Introduction to Parallel Programming With Beowulf," Forrest M. Hoffman & William W. Hargrove, https://web.archive.org/web/20030418102558/http:/climate.ornl.gov/~forrest/osdj-2000-11/ ("Hoffman")

Exhibit	Primary Reference and/or System Prior Art for the '768 Patent
A-19	U.S. Patent No. 8,065,503 ("Jia 503")
A-20	Omnibus obviousness chart

Id. at 144-145. Comparing Petitioner's claim charts for the '768 Patent to the above-highlighted prior art products/systems, Petitioner intends to rely on 16 prior art products/systems in the Parallel Litigation as part of its invalidity case. Petitioner's invalidity arguments in the Parallel Litigation are therefore significantly more expansive than those presented in this Petition.

Thus, Petitioner's *Sotera* stipulation "has limited [(if any)] practical effect in reducing the overlapping efforts here and in the Texas litigation." *See SAP Am.*, IPR2024-01432, Paper 14 at 9. "Petitioner's stipulation does not ensure that [this] IPR proceeding[ ] would be a 'true alternative' to the district court proceeding." *Motorola Sols.*, IPR2024-01205, Paper 19 at 3-4. To the contrary, the stipulation makes clear that Petitioner intends to litigate invalidity in both proceedings using the same references (and likely the same arguments) and to present substantial additional grounds in the Parallel Litigation far more expansive than those of the present Petition. *See Samsung Elec.*, IPR2025-00065, Paper 16 at 15.

This factor therefore strongly favors the Board exercising its discretion against institution.

E. Factor 5 Weighs Against Institution Because The Petitioner In This Proceeding Is The Same As The Defendant In The Parallel Litigation

"Because the petitioner and the defendant in the parallel proceeding are the same party, this factor weighs in favor of discretionary denial." *Apple Inv. v. Fintiv*, IPR2020-0019, Paper 15 at 15 (PTAB May 13, 2020). Petitioner cannot and does not dispute the complete overlap of the parties. Thus, this factor unquestionably favors discretionary denial. *SAP Am.*, IPR2024-01432, Paper 14 at 10.

F. Factor 6 Weighs Against Institution Because Additional Factors Weigh In Favor Of Discretionary Denial

i. The Petition Impermissibly Relies On Conclusory, Speculative, And Unsupported Expert Analysis That Mischaracterizes The Disclosure Of RS/6000 (Memorandum Factors 3 and 4)

Even if the Board considers the RS/6000 reference (Ex. 1007), Petitioner's assertion that the combination of Menon (Ex. 1005) and the RS/6000 reference (Ex. 1007) renders obvious the claim limitation "a second node comprising a second hardware processor with a plurality of processing cores," (Pet. at 49-50, element [26.5.1]; Pet. at 65, element [29.5.1]) and "wherein the hardware processor comprises multiple processor cores," (Pet. at 69, element [35.1.2]), is fatally flawed because Petitioner's invalidity theories are premised on their expert's mischaracterization of the RS/6000 reference (Ex. 1007) where he concludes, without supporting factual bases, that the reference discloses claim elements that

simply are not disclosed in the reference. *See, e.g.,* Ex. 1003, ¶¶ 185, 403[5]; Pet. 49-50. "Expert testimony that does not disclose the underlying facts or data on which the opinion is based is entitled to little or no weight." 37 C.F.R. § 42.65(a). *See also*, *Upjohn Co. v. Mova Pharm. Corp.*, 225 F.3d 1306, 1311 (Fed. Cir. 2000) ("Lack of factual support for expert opinion to factual determinations, however, may render the testimony of little probative value in a validity determination.") (quoting *Ashland Oil, Inc. v. Delta Resins & Refractories, Inc.*, 776 F.2d 281, 294 (Fed. Cir. 1985).

Claims 26 and 29 of the '768 Patent recites "a second node comprising a second hardware processor *with* a plurality of processing cores" and claim 35 of the '768 Patent recites "wherein the hardware processor *comprises* multiple processor cores." Ex. 1001 at 24 (32:54-55), 25 (33:62-63), 26 (35:18-19), respectively (emphasis added). This is consistent with the disclosure of the '768 Patent explaining that a "Core 2 Duo® processor ha[s] two processing cores." *See, e.g., id* at 12 (7:28-29). Petitioner's expert concludes that the RS/6000 reference discloses a device with processors including *a plurality of processing cores*, but provides no factual support and nothing more than speculation for this conclusion.

---

[5] This same incorrect flawed analysis also applies to the claim limitation "wherein the third node comprises a third hardware processor with a plurality of processing cores." *See, e.g.,* Pet. at 53 (claim element [26.6.1]); Pet. at 66 (claim element [29.6.1]). As well as "A third node comprising a third hardware processor with a plurality of processing cores." Pet. at 73 (claim element [35.4.3.1]).

Petitioner's expert's analysis on this point begins with a cropped quote from the RS/6000 reference. Ex. 2010, ¶ 32. Specifically, Petitioner's expert alleges "RS6000 also teaches that each of the nodes in the IBM SP2 has 'a Symmetric MultiProcessor (SMP)' ('*hardware processor*')." Ex. 1003, ¶ 185 citing to Ex. 1007, 2 (emphasis in original); *see also*, *id*. at ¶¶ 348 and 367 citing back to Ex. 1003, ¶ 185; *see also* Ex. 1003, ¶ 403 ("where the SMP ('hardware processor') has . . . ."). But RS/6000 actually states that "[n]odes have either a Symmetric MultiProcessor (SMP) *configuration* or a uniprocessor configuration." Ex. 1007 at 2 (emphasis added). Petitioner's expert's omission of the word "configuration" in the cropped quote is important because the further discussion in the RS/6000 reference about the SMP is discussing the configuration of the IBM SP2 device, and namely the number of processors – not the number of *processing cores within* the processors. Ex. 2010, ¶ 29.

Confirming that the RS/6000 reference (Exhibit 1007) discusses the number of processors and not the number of *processing cores within* its processors, the RS/6000 reference provides further clarification when discussing the "Description" and "Requirements and options" of the 375 MHz POWER3 SMP High Nodes (F/C/ 2058), which Petitioner's expert identifies as the processor of the IBM SP2 device. *See* Ex. 1003, ¶¶ 185 and 403 citing to Ex. 1007, 9; Ex. 1007, 9 ("375 MHz Power 3 SMP High Node (F/C 2058)."). Ex. 2010, ¶¶ 27, 30. In describing the 375 MHz

POWER3 SMP High Nodes, the RS/6000 reference expressly states that the "375 MHz POWER3 SMP High Nodes (F/C 2058) use PCI bus architecture *and have* four, eight, twelve, or sixteen 375 MHz 630FP 64-bit *processors per node*. Ex. 1007, 9 (emphasis added); Ex. 2010, ¶ 30. The RS/6000 reference further explains that a "mandatory prerequisite[ ]" is "four processors (on one card, mounted in one card slot)." Ex. 1007 at 9-10; Ex. 2010, ¶ 31. In other words, at a minimum, at least one F/C 2058 card is required, which itself includes *four processors*. Ex. 2010, ¶ 31.

The RS/6000 reference further states that "[y]ou can order up to three additional four-processor cards (F/C 4350) to configure the node with *a total of sixteen CPUs*." Ex. 1007 at 10 (emphasis added); Ex. 2010, ¶ 31. In other words, if the IBM SP2 is to be configured with four processors, it will have one four-processor card, if it is to be configured with eight processors, it will have two four-processor cards, if it is to be configured with twelve processors it will have three four-processor cards, and if it is to be configured with sixteen processors it will have four four-processor cards. Ex. 2010, ¶ 31. Contrary to Petitioner's expert, it does not disclose or suggest that the Symmetric MultiProcessor (SMP) is a hardware processor with a plurality of processing cores. Ex. 2010, ¶¶ 31-34. Rather it plainly states that the SMP Configuration can include "four, eight, twelve, or sixteen 375 MHz 630FP 64-bit processors." Ex. 1007 at 10; Ex. 2010, ¶¶ 30-31.

Petitioner's expert's assertion that the processors described in the RS/6000 reference have a plurality of processing cores is unsupported. Ex. 2010, ¶ 35. To the contrary, the RS/6000 reference states that Power3 processors, which are single core processors, are the heart of the SMP nodes in the RS/6000 architecture. Ex. 2010, ¶ 32; *see also* Ex. 1010 at 56-57. Figure 10 of the RS/6000 reference shows the use of single-core Power3 processors in an SMP Node System architecture:

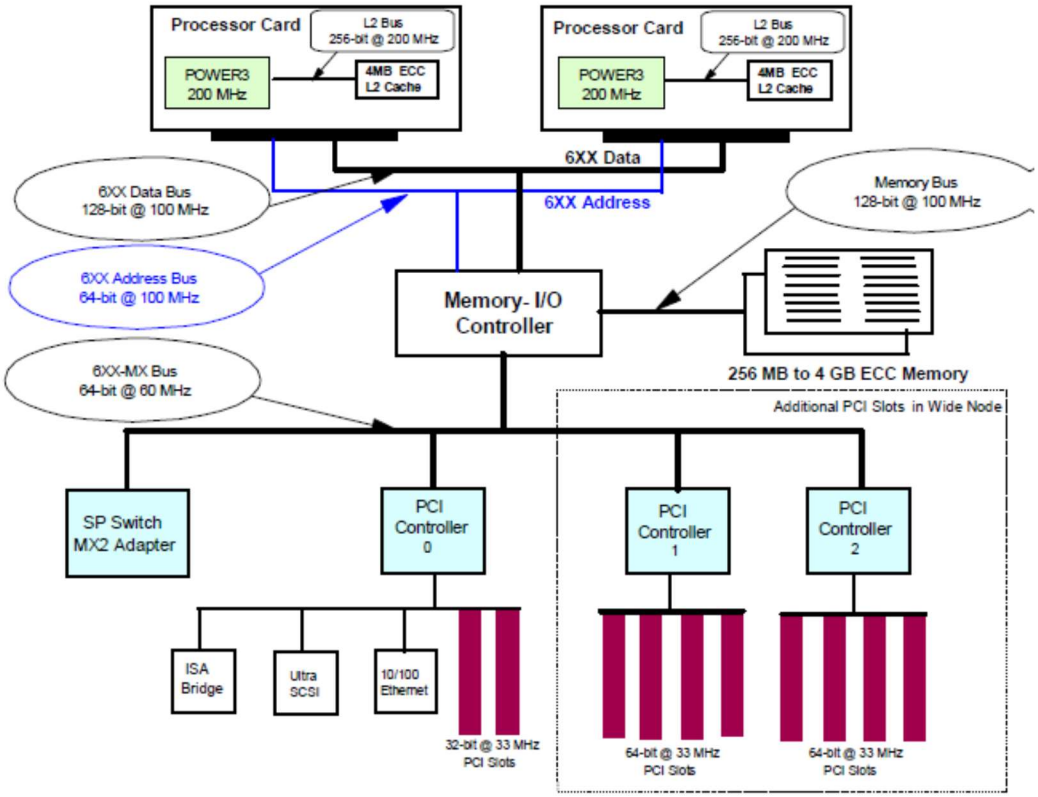

Figure 10. POWER3 SMP Node System Architecture

Ex. 1010, Figure 10. Thus, contrary to the conclusory assertions of Petitioner's expert, the RS/6000 reference teaches single core processors used in an SMP configuration. The RS/6000 reference neither teaches nor suggests, alone or in

combination with any of the other cited references, the "a second node comprising a second hardware processor *with* a plurality of processing cores" required by claims 26 and 29 of the '768 Patent or "wherein the hardware processor *comprises* multiple processor cores" required by claim 35 of the '768 Patent.

Aside from the expert's conclusory and unsupported testimony, the Petition offers no basis to establish that the RS/6000 reference, either on its own, or in combination with Menon (Ex. 1005) renders obvious a hardware processor *with* a plurality of processing cores, or a hardware processor that *comprises* multiple processor cores. Because this testimony is conclusory and not supported by objective evidence, it is entitled to little or no weight. *See Velander v. Garner*, 348 F.3d 1359, 1371 (Fed. Cir. 2003) ("[W]hat the [PTAB] consistently did was accord little weight to broad conclusory statements that it determined were unsupported by corroborating references. It is within the discretion of the trier of fact to give each item of evidence such weight as it feels appropriate.") (citation omitted); *see also In re Am. Acad. of Sci. Tech Ctr.*, 367 F.3d 1359, 1368 (Fed. Cir. 2004) ("[T]he [PTAB] is entitled to weigh the declarations and conclude that the lack of factual corroboration warrants discounting the opinions expressed in the declarations . . . .") (citations omitted). The Board must consider the petition as written, and as written the Petitioner has failed to meet its initial burden that the asserted grounds render the

claimed invention obvious. Because this affects all challenged claims, such failure strongly favors the Board exercise its discretion against institution.

ii. The Petition Fails To Carry Its Burden That Exhibits 1006-1008 and 1017 Qualify As Printed Publications (Memorandum Factor 3)

The grounds for unpatentability asserted by the petitioner in an *inter partes* review must rely upon prior art "consisting of patents or printed publications." 35 U.S.C. § 311(b). An online reference qualifies as a "printed publication" only if it was "disseminated or otherwise made available to the extent that persons interested and ordinarily skilled in the subject matter or art exercising reasonable diligence, can locate it." *SRI*, 511 F.3d at 1194 (citation omitted). That standard is not satisfied merely by a date, copyright, or internet address appearing on the face of the document. *See, e.g., Content Square SAS v. Medallia Inc.,* IPR2022-00316, Paper 13 at 26–27 (PTAB July 14, 2022) ("Numerous Board decisions have held that simply pointing to a date, even a copyright date, is not sufficient at the institution stage to demonstrate public accessibility.")

Rather, for institution of an *inter partes* review "the burden is on the petitioner to identify with particularity evidence sufficient to establish a reasonable likelihood that the reference was publicly accessible before the critical date…." *Hulu, LLC v. Sound View Innovations, LLC*, IPR2018-01039, Paper 29 at 13 (PTAB Dec. 20, 2019) (precedential). The Board emphasized that this standard is "far more than is

required in typical notice pleading. . .," and requires specific, substantiated evidence. *Id.*; *see also In re Wyer*, 655 F.2d, 221, 227 (CCPA 1981) (burden to show sufficient proof of public accessibility falls on the party asserting a reference as a prior art printed publication). Thus, the Petitioner must show with particularity that each reference was practically available with reasonable effort at the relevant time — simply showing that it existed somewhere on the internet or somewhere in a library is not enough. Here, Petitioner did not make a sufficient evidentiary showing.

Petitioner has not met its evidentiary burden to demonstrate that Exhibits 1006 (Trefethen), 1007 (RS/6000 Planning Guide), 1008 (AIX POE Manual), and 1017 (MPIF Report) were publicly accessible before the critical date of June 13, 2006. Accordingly, Petitioner has not satisfied its burden of showing these exhibits are printed publications under 35 U.S.C. § 311(b), and they cannot be relied upon as prior art in this proceeding.

The Petition contains:

- No catalog or database indexing records;
- No librarian declaration or contemporaneous library system listings;
- No evidence of searchability by search strings likely to be composed by the public.

Exhibits 1007 and 1008 are IBM technical manuals with allegations but no evidence of library indexing, cataloging, or practical searchability. Petitioner did not

list any citations by the public of Exhibits 1007 or 1008, and did not offer any evidence that a query of any search engine before the critical date would have led to the URL addresses at which they were allegedly available. Instead, the evidence offered by the Petition showed only that the IBM manuals were technically accessible to people who were aware of certain private company website addresses (based on IBM's company name and certain corresponding IBM product names, *e.g.*, "RS6000," "AIX"). However, the Petition did not show that the IBM technical manuals relied upon were publicly searchable based on their subject matter or substantive content.

In re Cronyn, 890 F.2d 1158, 1161 (Fed. Cir. 1989) is instructive. In that case, a thesis document was alphabetically indexed in a library by the author's name, but the Federal Circuit found insufficient public accessibility because "the only research aid in finding the theses was the student's name, which of course, bears no relationship to the subject of the student's thesis." Likewise here, the "accessibility" purported by the Petition is insufficient to demonstrate public availability because the company name ("IBM") and the IBM product names ("RS6000" and "AIX") were not shown by the Petition to bear sufficient relationship to the cluster computing concepts that a researcher would have presumably searched and that Petitioner now challenges as allegedly obvious.

Exhibit 1017 (MPIref) appears to be a draft of the final report of the Message Passing Interface Forum (MPIF), a group that was collaborating to propose technical features for the MPI Interface. Petitioner alleges that Exhibit 1017 was made publicly accessible on the basis that immediately after listing contributing participants of MPIF (on page iv) the exhibit states: "The University of Tennessee and Oak Ridge National Laboratory made the draft available by anonymous FTP mail servers and were instrumental in distributing the document." The document never states that it was made "publicly" accessible or available. It simply refers to making the draft "available." When read in context, the sentence upon which Petitioner relies appears to refer to limited distribution to the MPIF participants who were collaborating to develop Exhibit 1017 – not the general public. There simply is no evidence that the document was made available to the general public.

Therefore, to the extent Exhibit 1017 was distributed, it was through working groups and FTP to a limited group of recipients who already knew about the document. The PTAB has repeatedly held this type of limited dissemination to be insufficient to establish public accessibility for qualifying an IPR exhibit as a printed publication under 35 U.S.C. § 311(b). *See Argentum Pharm. v. Research Corp. Tech. Inc.*, IPR2016-00204, Paper 19 (Decision on Institution) at 11-12 (PTAB May 23, 2016) (dissemination to a limited group already having personal knowledge of a

document does not establish public accessibility for qualification as a "printed publication").

A similar factual situation was considered by the Federal Circuit in *Samsung Elecs. Co. v. Infobridge Pte. Ltd.*, 929 F.3d 1363, 1372 (Fed. Cir. 2019). In *Samsung*, despite remanding on a different legal issue, the Federal Circuit affirmed the PTAB's holding that the alleged public accessibility of a working draft "WD4" of the High Efficiency Video Coding standard was not shown by on-line accessibility to the same group who collaborated to create the working draft, *i.e.*, members of the Joint Collaborative Team on Video Coding (JCT-VC). The ability of that group to find the WD4 working draft during the relevant time period did not imply that the interested public could do so by exercising reasonable diligence. "The Board therefore properly focused on whether those outside of the JCT-VC knew about the JCT-VC website in considering whether posting the WD4 reference on the website made it publicly accessible." *Id*. The same rationale applies here to the Petitioner's insufficient showing that MPIF participants could access Exhibit 1017 via an FTP server.

In the present case, the Petition did not provide evidence that Exhibit 1017 was practically searchable by reasonable effort in a public forum, or that the alleged FTP server content was catalogued, indexed, or searchable by the public at large. For those additional reasons, the Petition has not shown that Exhibit 1017 was

sufficiently publicly accessible for qualification as a printed publication. *See SRI,* 511 F.3d at 1196 (holding that a paper placed on an FTP server was not publicly accessible because the FTP server "did not contain an index or catalogue or other tools for customary and meaningful research").

The Petitioner alleges that Exhibit 1006 was made publicly accessible at a particular university internet address (www.cs.cornell.edu/Info/People/lnt/multimatlab.html), but that is not evidence that interested members of the public could have found that particular internet address with reasonable diligence if they did not already know about it. Public accessibility requires more than technical accessibility. *See Samsung,* 929 F.3d at 1369. There is no evidence that Exhibit 1006 (Trefethen) was accessible to the public, for example indexed or cataloged in a library or published in a journal prior to the critical date.

Therefore, Petitioner failed to satisfy its burden of establishing that an interested member of the public in mid-2006 would have been aware of, or been able to find, the Trefethen or IBM/MPIF documents by exercising reasonable diligence. Thus, Petitioner has failed to make the threshold showing that Exhibits 1006, 1007, 1008, or 1017 were publicly accessible before June 13, 2006, and these exhibits cannot be relied on in the Board's § 311(b) analysis.

Petitioner also relies on a purposed citation listing in Exhibits 1035 and 1037 and invites the Board to infer public availability based on hearsay references to

certain documents, and Petitioner's unsupported assertion that Exhibits 1006 and 1017 reflect those documents. However, Exhibits 1035 and 1037 are unauthenticated, and therefore inadmissible under Fed. R. Evid. §§ 901-902. Petitioner offers no custodian's declaration authenticating the content or explaining the source of these documents, and does not identify any basis upon which they would be self-authenticating.

Exhibits 1035 and 1037 are also inadmissible as hearsay under Fed. R. Evid. §§ 801-802 because they are out-of-court statements offered to prove the truth of the matters asserted (namely, that the underlying references were publicly available at a certain time). Petitioner has not identified any hearsay exception under Fed. R. Evid. § 803 upon which to admit the out-of-court statements for their alleged truth. Therefore, Exhibits 1035 and 1037 cannot be relied upon by the Board as admissible evidence that documents cited therein were publicly accessible.

Even if considered, the mere fact that Exhibits 1035 and 1037 cite to documents that Petitioner alleges are the Trefethen document and the MPIF report is insufficient to show that those documents were publicly accessible. *See, e.g., Medivis, Inc. v. Novard Corp.*, IPR2023-00042, Paper 35 (FWD) at 27-28 (PTAB Mar. 6 ,2024) (holding that a Journal of Biomedical Informatics reference was not sufficiently shown to be publicly accessible by alleged citation by seven publications). Likewise, the citation of Exhibit 1006 (Trefethen) by Exhibit 1005

(Menon), does not qualify Trefethen as a printed publication that was practically accessible to the public before the critical date. Merely being cited later by another reference does not establish searchability and discoverability by skilled artisans using reasonable diligence before June 13, 2006. *See, e.g., Argentum*, IPR2016-00204, Paper 19 at 11-12 (articles that cited a thesis were held insufficient to establish public accessibility of the thesis, where the articles' authors had personal knowledge of the thesis).

It is fatal that Petitioner provides no information about how one would obtain the Trefethen document or the MPIF report, or whether those documents were, in fact, practically searchable by the public. Petitioner has therefore failed to satisfy its burden of showing that the Trefethen document or the MPIF report qualify as "printed publications" under § 311(b).

In sum, Petitioner's Exhibits 1006, 1007, 1008, and 1017 should be given no weight because Petitioner has not met its burden to show these are prior art printed publications. This failure is fatal under 35 U.S.C. § 311(b). Petitioner's attempt to establish public accessibility via Exhibits 1035 and 1037 also fails – not only are these exhibits inadmissible hearsay, but they do nothing to demonstrate genuine public availability of the underlying references. Accordingly, the Board should refuse to institute trial on any ground relying on Exhibits 1006, 1007, 1008, or 1017, and the grounds depending on them should be denied.

iii. Settled Expectations Also Favor Discretionary Denial (Memorandum Factor 5)

Recently, in *Dabico Airport Sols. Inc. v. Axa Power Aps*, IPR2025-00408, Paper 21 (PTAB Jun. 18, 2025), it was determined that discretionary denial was appropriate where "the challenged patent has been in force almost eight years, creating settled expectations." *Id*. at 2. However, the decision noted that "there is no bright-line rule on when expectations become settled," and cited to the six year limitation of § 286 on infringement damages while explaining that the "approach [in Dabico] aligns with other approaches to settled expectations, for example, for filing infringement lawsuits." *Id*. at 3. Here, the '768 Patent has been in force for over six years, and as shown below the '768 Patent's priority patents have been in force for more than 11 years.

U.S. Patent No.	Type	Issue Date	Time In Force To Date
8,082,289	Original Patent	12/20/2011	13 years, 6 months, 26 days
8,140,612	CIP	3/20/2012	13 years, 3 months, 26 days
8,676,877	Continuation	3/18/2014	11 years, 3 months, 28 days

Petitioner is not new to the computing industry. It was founded in 1969 and is a savvy beneficiary of the U.S. Patent system, having obtained approximately 7,500 patents in the United States as of December 28, 2024. Ex. 2012 at 19.

Additionally, the ’768 Patent was previously involved in litigation with NVIDIA (*See* IPR2025-00863, Paper 8 at 1-2), a competitor of Petitioner, and another entity involved in the same technology space as Petitioner. Furthermore, institution was already denied for *inter partes* review of the ’768 Patent in connection with the NVIDIA litigation. IPR2021-00020, Paper 9; IPR2021-00021, Paper 9. Thus, Petitioner should have been aware of the ’768 Patent as a result of the prior NVIDIA litigation and IPRs.

Nonetheless, to the extent that Petitioner argues that it did not have prior knowledge of the ’768 Patent, the Acting Director has already determined that “actual notice of a patent or of possible infringement is not necessary to create settled expectations,” and thus Petitioner’s argument is meritless. *Dabico Airport Sols.*, IPR2025-00408, Paper 21 at 3. The more than six years that the ’768 Patent has been in force, the more than 11-plus years that its priority patents have been in force, and its continued validity despite prior litigation and IPR challenges has created a settled expectation favoring the Board exercise its discretion and deny institution of this petition. *Id*.

III. *GENERAL PLASTIC* IS NOT RELEVANT TO CONSIDERATION OF THIS REQUEST FOR DISCRETIONARY DENIAL

The Petitioner’s arguments regarding *General Plastic* are inapposite as that case does not apply to the circumstances of the present Petition. In particular, the Board, in formulating the *General Plastic* factors that Petitioner seeks to apply,

"recognize[d] the potential for abuse of the review process by repeated attacks on" a patent by the *same* petitioner. *Gen. Plastic Indus. Co. v. Cannon Kabushiki Kaisha,* IPR2016-01357, Paper 19 at 16–17 (PTAB Sept. 6, 2017) ("General Plastic"). "Whether it is the same petitioner that is bringing a second petition [thus] is at the heart of the General Plastic factors." *Toshiba America Information Systems, Inc. et al. v. Walletex Microelectronics Ltd.*, IPR2018-01538, Paper 11 at 20-21 (PTAB Mar. 5, 2019). Since Petitioner in the present IPR is not the same as in the prior IPR petitions regarding the '768 Patent, Petitioner's arguments that *General Plastic* supports institution are unfounded and should be disregarded by the Board.

The Board has found that where "Petitioner has not previously filed a petition against the [subject] patent, the second through fifth [General Plastic] factors bear little relevance in this case." *Western Dig. Corp. v. Spex Tech., Inc.*, IPR2018-00084, Paper 14 at 17 (PTAB Apr. 25, 2018); *Alcatel-Lucent USA Inc. v. Oyster Optics, LLC*, IPR2017-02146, Paper 12 at 12 (PTAB Feb. 28, 2018) ("Once resolution of factor 1 indicates that Petitioner had not previously filed a petition against the same patent, factors 2–5 bear little relevance."). Because Petitioner has not previously filed a petition against the '768 Patent, the arguments regarding *General Plastic* factors 2-5 are irrelevant to the consideration of the instant request for discretionary denial of institution.

With respect to *General Plastic* factors 6 (the finite resources of the Board) and 7 (the requirement to issue a final determination not later than 1 year after the institution decision), the Petition makes the conclusory argument that "it expects that instituting review would require only modest resources from the Board." Pet. at 100 Contrary to the Petitioner's unsupported assertion, instituting an IPR for the present petition would be an inefficient use of scarce Board resources as such in IPR would not be a "true alternative" to the Parallel Litigation.

Petitioner's *General Plastic* arguments thus should be disregarded, and institution should be denied for the reasons discussed above in connection with the *Fintiv* and other Memorandum factors.

IV. PETITIONER'S JOINDER MOTION ALSO FAVORS DISCRETIONARY DENIAL

Petitioner's Motion for Joinder, filed concurrently with the instant Petition, also favors discretionary denial. Where a motion for joinder is filed, "discretionary considerations are first reviewed for the Petition on its own, and then reviewed [as] if joinder were to be granted." *Sportradar AG v. Sportscaster Inc.*, IPR2025-00265, Paper 19 (PTAB Jun. 25, 2025).

As discussed above, the discretionary considerations favor denying institution of the instant Petition on its own. The *Fintiv* factors favor denial because: (1) a stay has not been requested and is unlikely to be granted if this IPR is instituted, (2) trial in the Parallel Litigation will occur at or around the projected statutory deadline for

the instant Petition and before the four related patents challenged by the Petitioner, (3) by the time of the institution decision, the Parties and the District Court will have invested significant effort into the Parallel Litigation, (4) there is substantial overlap between the Petition and the Parallel Litigation such that this IPR, if instituted, would not be a "true alternative" to the Parallel Litigation, and (5) there is complete overlap between the Parties in this IPR and the Parallel Litigation. *Supra* at AII.A-II.E. Additionally, the strength of the Petition is weak because it relies on a conclusory, speculative, and factually unsupported expert analysis, exhibits that the Petitioner has failed to establish qualify as printed publications, and because of the amount of time that the '768 Patent has been in force a settle expectation has been created. *See supra* at II.F

Additionally, consideration of the facts if joinder were to be granted also favors the Board exercising its discretion to deny this petition. The projected final written decision due date for IPR2025-00795 is October 17, 2026. This is mere weeks before the trial date of the Parallel Litigation, and is similar to the situation in *ARM Ltd. v. Daedalus Prime LLC*, where the Acting Director exercised the Board's discretion to deny institution where the district court trial could occur just one-month before issuance of the final written decision. IPR2025-00207, Paper 10 (Decision of the Acting Director) at 2 (PTAB May 16, 2025). *See also Advanced Micro Devices, Inc.,* IPR2025-00223, Paper 9 (Decision of the Acting Director) at 2 (PTAB

Jun. 12, 2025) (exercising discretion to deny institution and reasoning that "[e]ven though a district court trial date that occurs after a projected final written decision date reduces the possibility of conflicting decisions, that benefit does not outweigh the efficiencies gained by avoiding parallel proceedings in this instance because of the parties' meaningful investment in the district court proceeding").

Contrary to the Petitioner's argument in its Joinder Motion, joinder of the instant Petition with IPR2025-00795 will impose additional burdens on the Board. IPR2025-00863, Paper 4 at 1. If Intel, the petitioner in IPR2025-00795 settles that proceeding, the Office "would have to maintain a proceeding that it would not have otherwise instituted with respect to the Petitioner[] here." *Sportradar AG*, IPR2025-00265, Paper 19. Therefore, Petitioner's joinder motion does not warrant denying Patent Owner's request for discretionary denial.

V. CONCLUSION

Taken together, the *Fintiv* and Memorandum factors weigh strongly in favor of the Board exercising its discretion against institution. For the reasons noted above, Patent Owner respectfully submits that the Director should deny institution of all Grounds in the Petition.

Dated: July 16, 2025

Respectfully submitted,

/David P. Lindner/

David P. Lindner, Reg. No. 53,222
Counsel for Patent Owner
Advanced Cluster Systems, Inc.

CERTIFICATION UNDER 37 C.F.R. § 42.24

Pursuant to 37 C.F.R. § 42.24(d), I certify that this brief complies with the type-volume limits of 37 C.F.R. § 42.24 and the Director Memorandum because it contains 9,182 words, according to the word-processing system used to prepare this brief, excluding the parts that are exempted by 37 C.F.R. § 42.24 (including the table of contents, a table of authorities, a listing of facts which are admitted, a certificate of service or this certificate word count, and appendix of exhibits).

Dated: July 16, 2025

/David P. Lindner/
David P. Lindner, Reg. No. 53,222
Counsel for Patent Owner
Advanced Cluster Systems, Inc.

CERTIFICATE OF SERVICE

Pursuant to 37 C.F.R. § 42.6(e), the undersigned hereby certifies that I caused true and correct copies of the foregoing **BRIEF IN SUPPORT OF PATENT OWNER'S REQUEST FOR DISCRETIONARY DENIAL AND ADVANCED CLUSTER SYSTEMS, INC.'S EXHIBITS 2001-2012** were served in their entirety on July 16, 2025 by filing this document through the U.S. Patent Office's P-TACTS Filing System as well as causing true and correct copies be delivered by electronic mail on Petitioner's lead and backup counsel at the following email addresses (as agreed by counsel for Petitioner):

Brian E. Ferguson
Chaoxuan Charles Liu
James Kappos
Winston & Strawn LLP
BEFerguson@winston.com
CCLiu@winston.com
jkappos@winston.com

Dated: July 16, 2025

/David P. Lindner/
David P. Lindner, Reg. No. 53,222
Counsel for Patent Owner
Advanced Cluster Systems, Inc.