US007247887B2

(12) **United States Patent**
King et al.

(10) **Patent No.: US 7,247,887 B2**
(45) **Date of Patent: Jul. 24, 2007**

(54) **SEGMENTED CHANNEL MOS TRANSISTOR**

(75) Inventors: **Tsu-Jae King**, Fremont, CA (US); **Victor Moroz**, Saratoga, CA (US)

(73) Assignee: **Synopsys, Inc.**, Mountain View, CA (US)

(*) Notice: Subject to any disclaimer, the term of this patent is extended or adjusted under 35 U.S.C. 154(b) by 59 days.

(21) Appl. No.: **11/173,237**

(22) Filed: **Jul. 1, 2005**

(65) **Prior Publication Data**

US 2007/0001237 A1 Jan. 4, 2007

(51) **Int. Cl.**
H01L 29/43 (2006.01)

(52) **U.S. Cl.** **257/139**

(58) **Field of Classification Search** 257/139
See application file for complete search history.

(56) **References Cited**

U.S. PATENT DOCUMENTS

3,912,556	A	10/1975	Grenon et al.	
4,377,865	A	3/1983	Sugino et al.	
5,066,603	A	11/1991	Bulat et al.	
5,932,911	A *	8/1999	Yue et al.	257/330
6,111,296	A *	8/2000	Yamazaki et al.	257/401
6,355,532	B1 *	3/2002	Seliskar et al.	438/283
6,706,571	B1	3/2004	Yu et al.	
6,812,508	B2	11/2004	Fukumi	
2004/0099925	A1	5/2004	Poveda	
2004/0108559	A1	6/2004	Sugii et al.	
2005/0023569	A1	2/2005	Yang	
2005/0056892	A1	3/2005	Seliskar	
2005/0202604	A1	9/2005	Cheng et al.	
2005/0224800	A1	10/2005	Lindert et al.	
2005/0224875	A1	10/2005	Anderson et al.	
2005/0224890	A1	10/2005	Bernstein et al.	
2005/0239254	A1	10/2005	Chi et al.	
2005/0285186	A1	12/2005	Fujiwara	

* cited by examiner

Primary Examiner—Roy Karl Potter
(74) *Attorney, Agent, or Firm*—Bever, Hoffman & Harms, LLP; Jeanette S. Harms

(57) **ABSTRACT**

By forming MOSFETs on a substrate having pre-existing ridges of semiconductor material (i.e., a "corrugated substrate"), the resolution limitations associated with conventional semiconductor manufacturing processes can be overcome, and high-performance, low-power transistors can be reliably and repeatably produced. Forming a corrugated substrate prior to actual device formation allows the ridges on the corrugated substrate to be created using high precision techniques that are not ordinarily suitable for device production. MOSFETs that subsequently incorporate the high-precision ridges into their channel regions will typically exhibit much more precise and less variable performance than similar MOSFETs formed using optical lithography-based techniques that cannot provide the same degree of patterning accuracy. Additional performance enhancement techniques such as pulse-shaped doping and "wrapped" gates can be used in conjunction with the segmented channel regions to further enhance device performance.

30 Claims, 19 Drawing Sheets

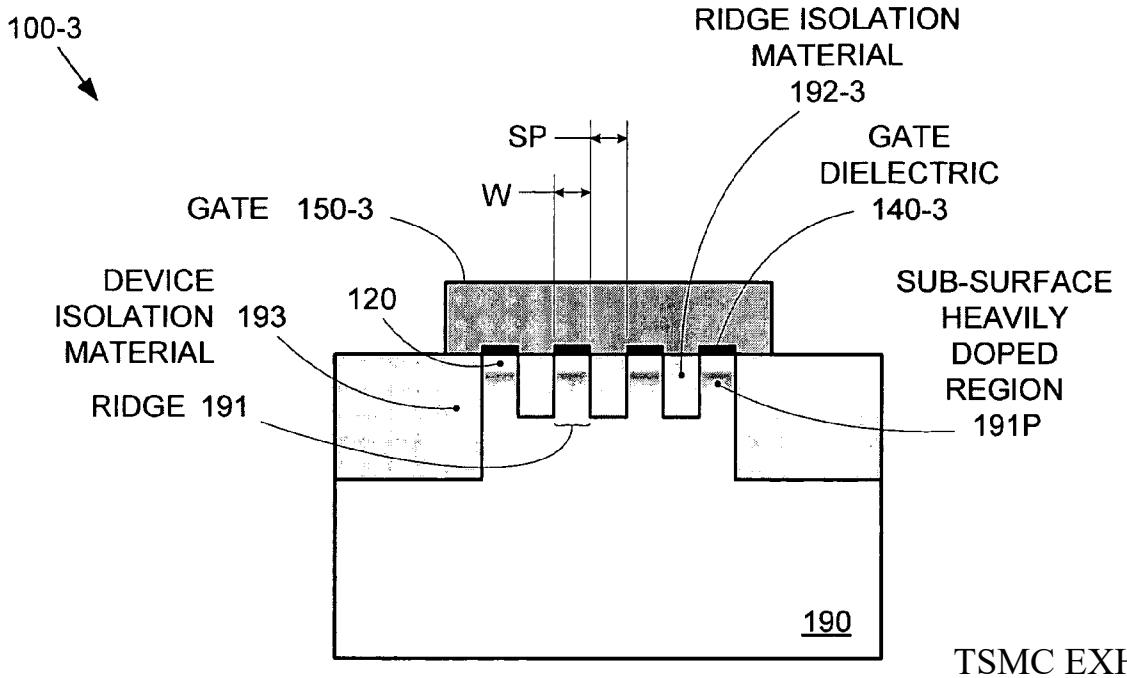

TSMC EXHIBIT 1047
TSMC v. Marlin Semiconductor Ltd.
IPR2025-00864

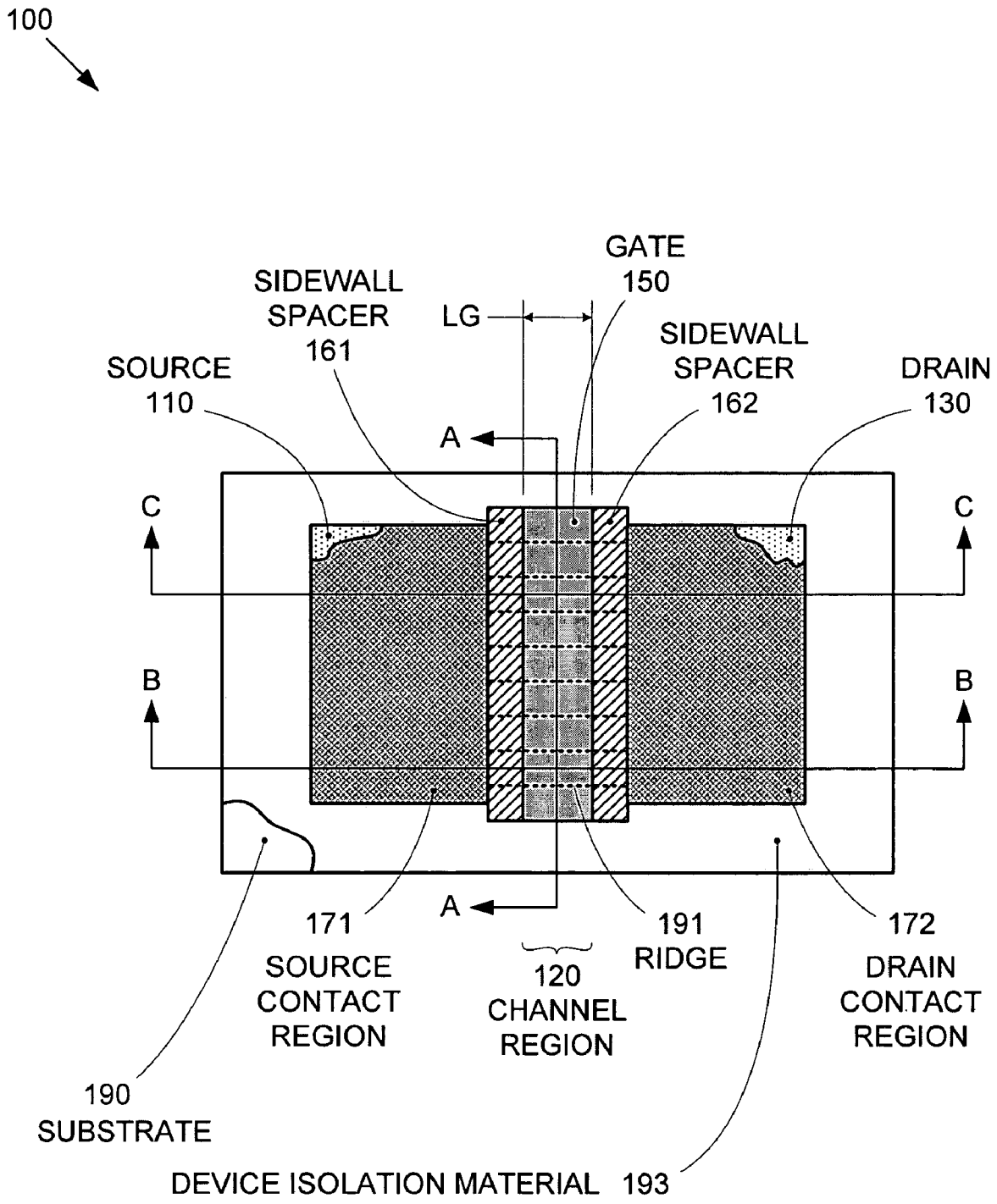
100
GATE
150
SIDEWALL
SPACER
161
LG
SIDEWALL
SPACER
162
SOURCE
110
DRAIN
130
A
C
C
B
B
A
171
SOURCE
CONTACT
REGION
120
CHANNEL
REGION
191
RIDGE
172
DRAIN
CONTACT
REGION
190
SUBSTRATE
DEVICE ISOLATION MATERIAL 193

FIG. 1A

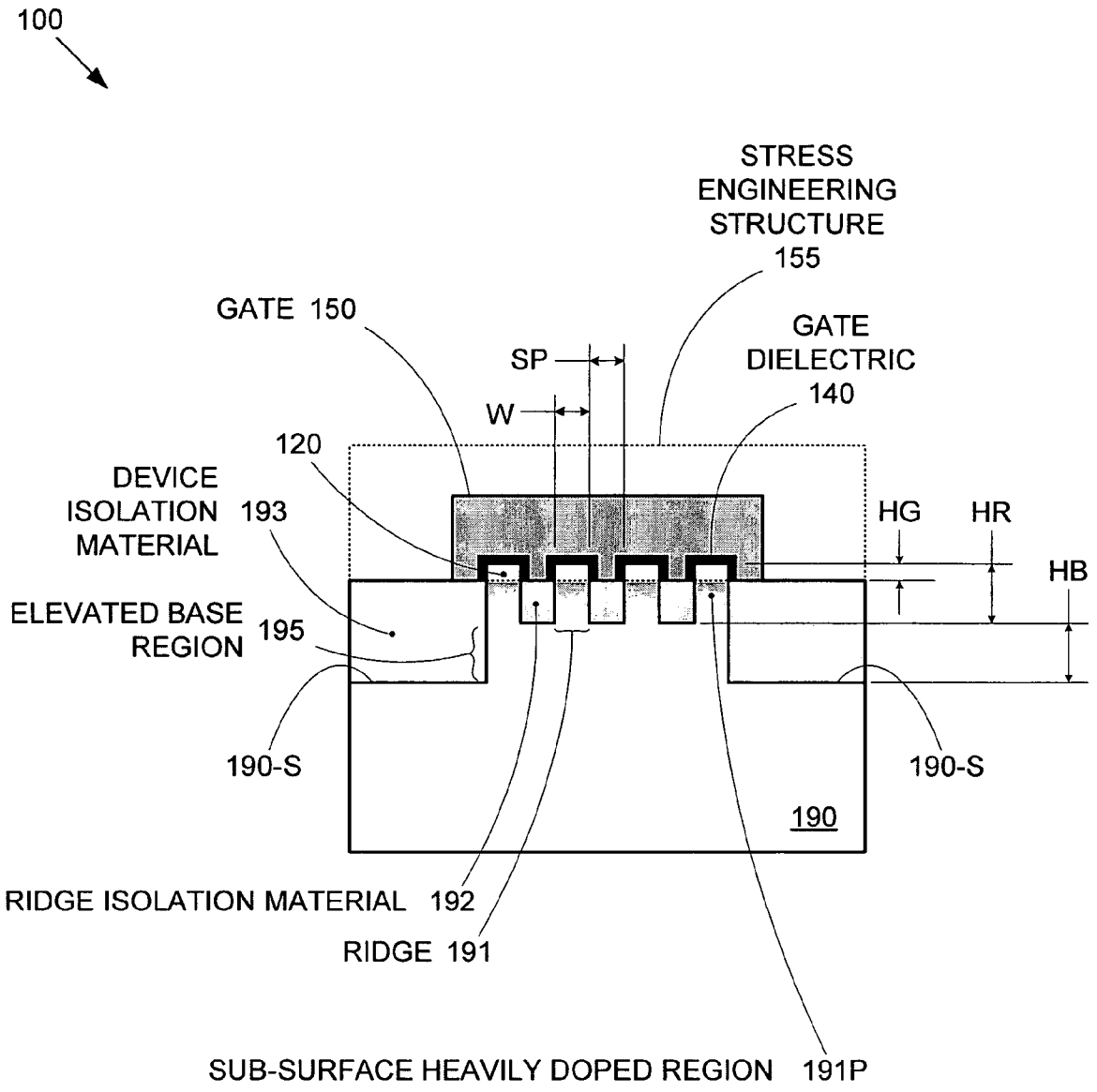
100
STRESS
ENGINEERING
STRUCTURE
155
GATE 150
GATE
DIELECTRIC
140
SP
W
120
DEVICE
ISOLATION
MATERIAL
193
HG
HR
HB
ELEVATED BASE
REGION
195
190-S
190-S
190
RIDGE ISOLATION MATERIAL 192
RIDGE 191
SUB-SURFACE HEAVILY DOPED REGION 191P

FIG. 1B

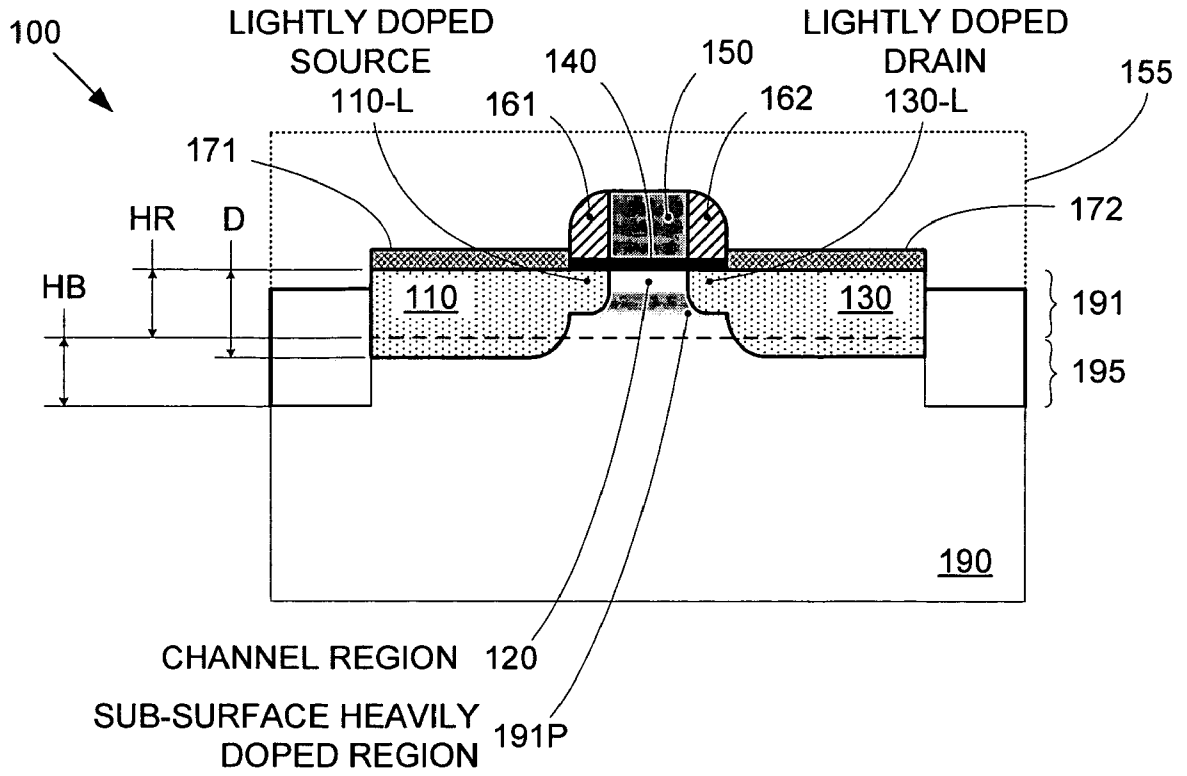
100
LIGHTLY DOPED SOURCE 110-L
140
150
LIGHTLY DOPED DRAIN 130-L
155
161
162
171
172
HR
D
HB
110
130
191
195
190
CHANNEL REGION 120
SUB-SURFACE HEAVILY DOPED REGION 191P

FIG. 1C

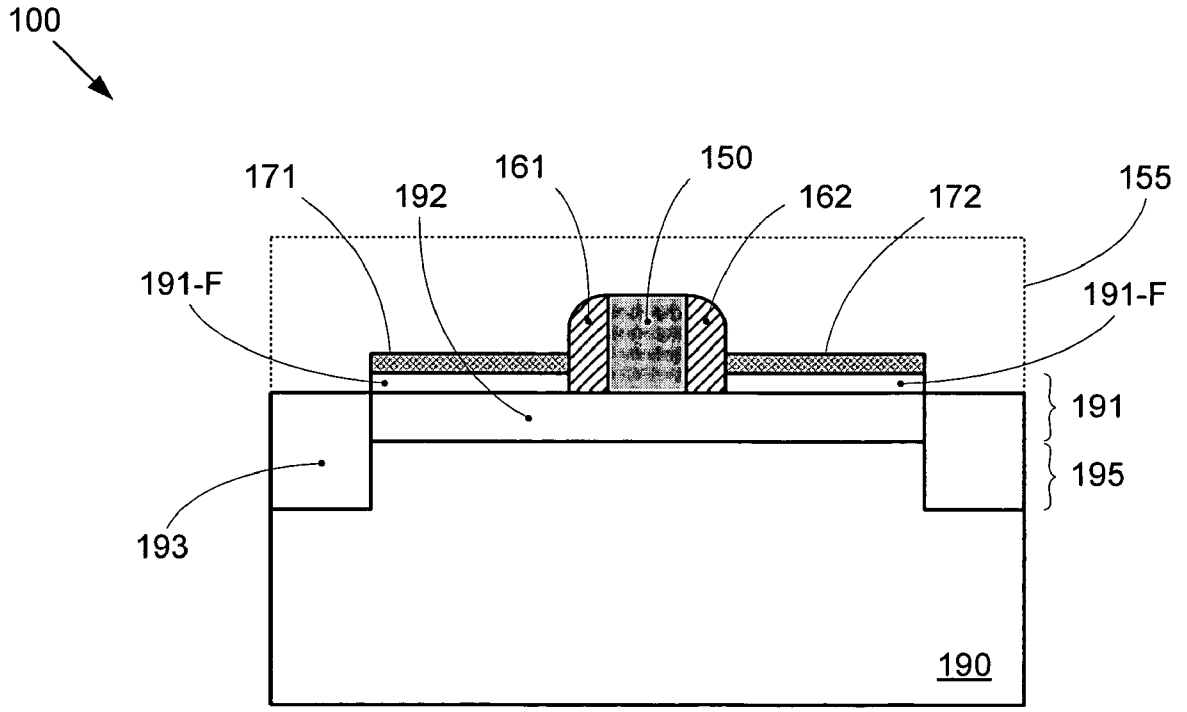
100
171
192
161
150
162
172
155
191-F
191-F
191
195
193
190

FIG. 1D

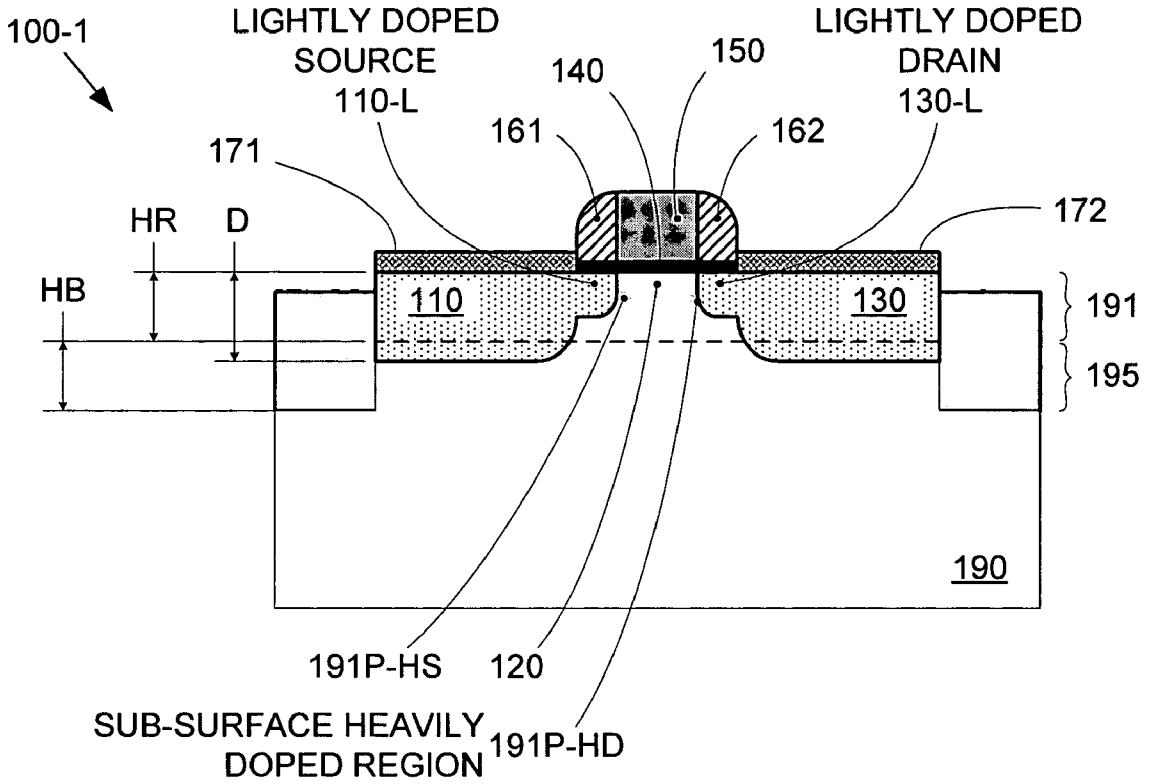
100-1
LIGHTLY DOPED SOURCE 110-L
140
150
LIGHTLY DOPED DRAIN 130-L
161
162
171
172
HR
D
HB
110
130
191
195
190
191P-HS
120
SUB-SURFACE HEAVILY DOPED REGION
191P-HD

FIG. 1E

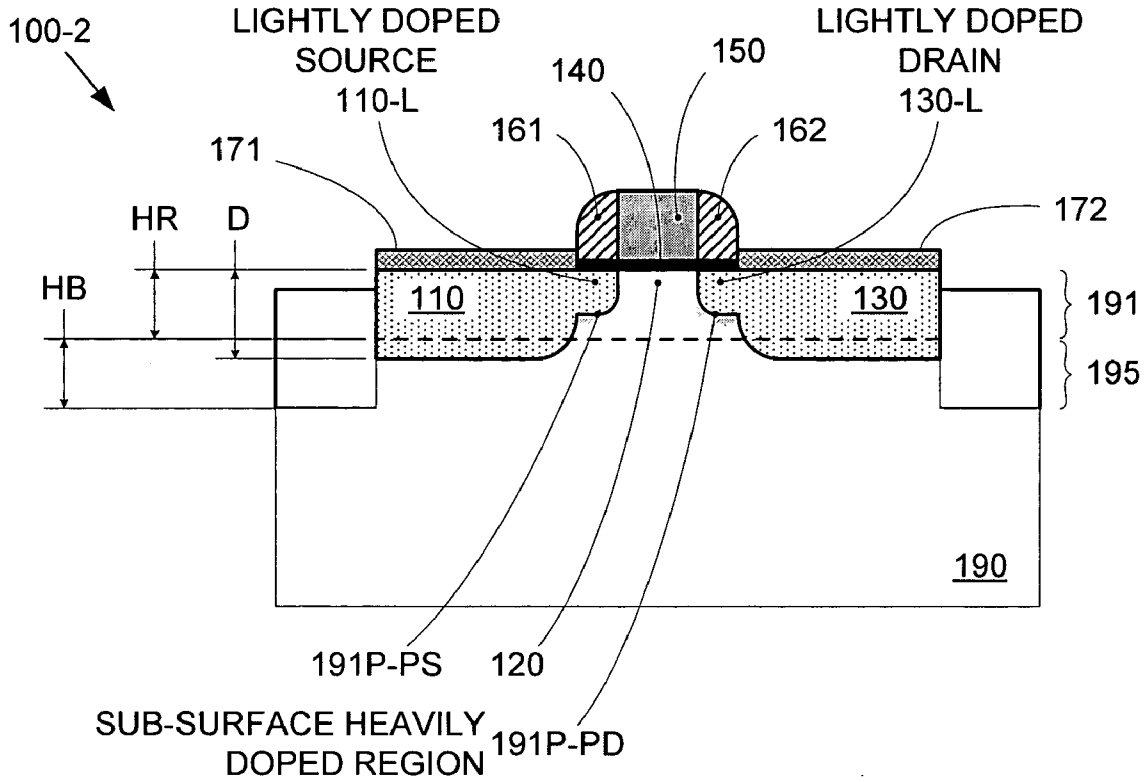
100-2
LIGHTLY DOPED SOURCE 110-L
140
150
LIGHTLY DOPED DRAIN 130-L
161
162
171
172
HR
D
HB
110
130
191
195
190
191P-PS
120
SUB-SURFACE HEAVILY DOPED REGION
191P-PD

FIG. 1F

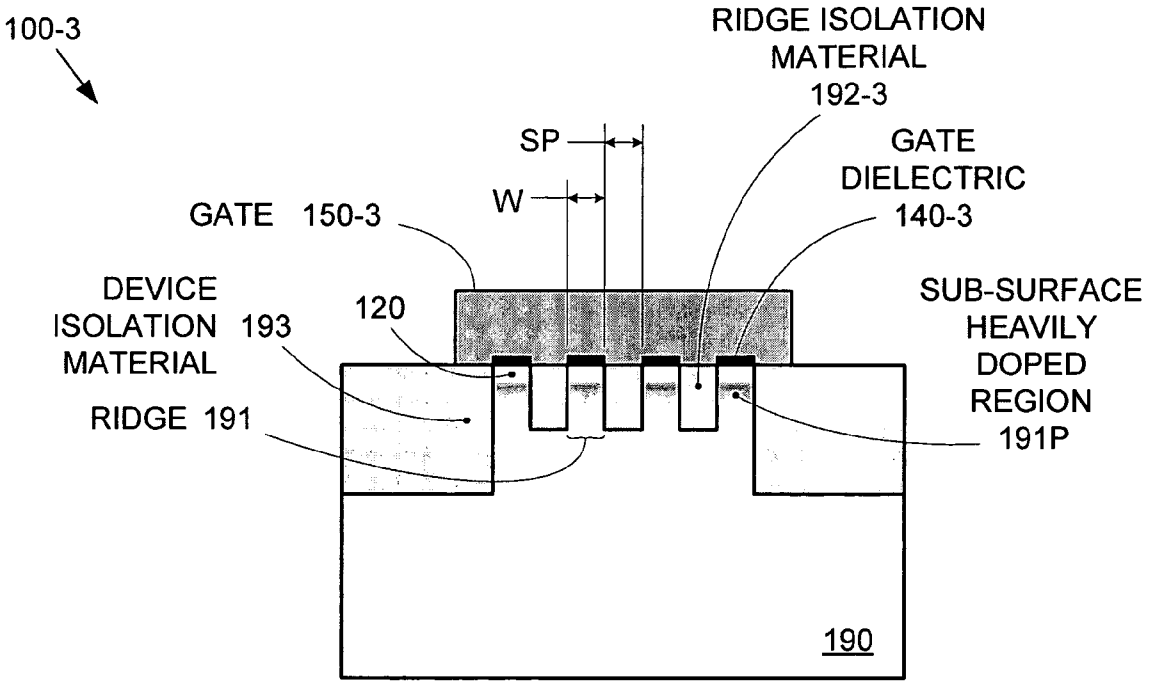
100-3
RIDGE ISOLATION MATERIAL 192-3
SP
W
GATE DIELECTRIC 140-3
GATE 150-3
DEVICE ISOLATION MATERIAL
193
120
SUB-SURFACE HEAVILY DOPED REGION 191P
RIDGE 191
190

FIG. 1G

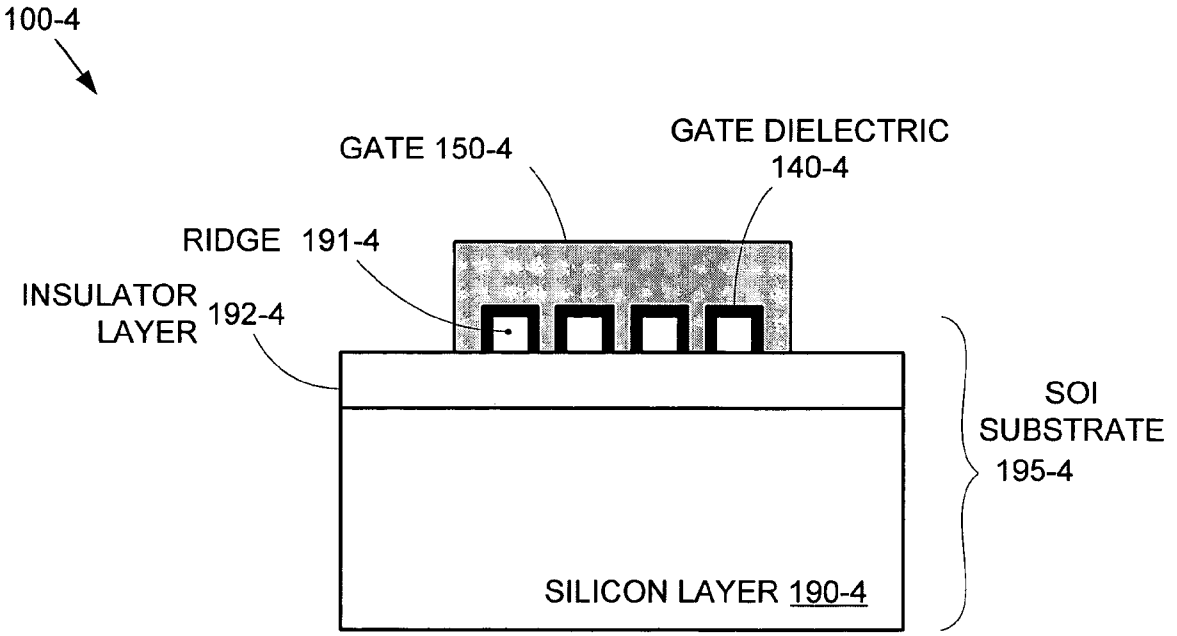
100-4
GATE 150-4
GATE DIELECTRIC 140-4
RIDGE 191-4
INSULATOR LAYER 192-4
SOI SUBSTRATE 195-4
SILICON LAYER 190-4

FIG. 1H

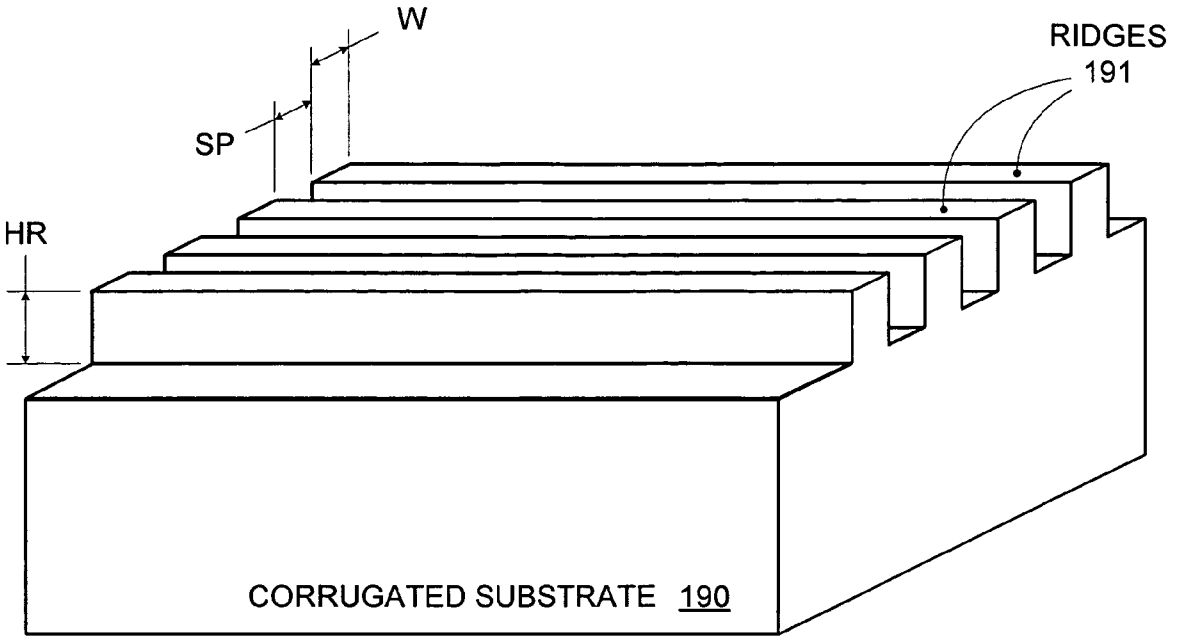
W
RIDGES
191
SP
HR
CORRUGATED SUBSTRATE 190

FIG. 2A

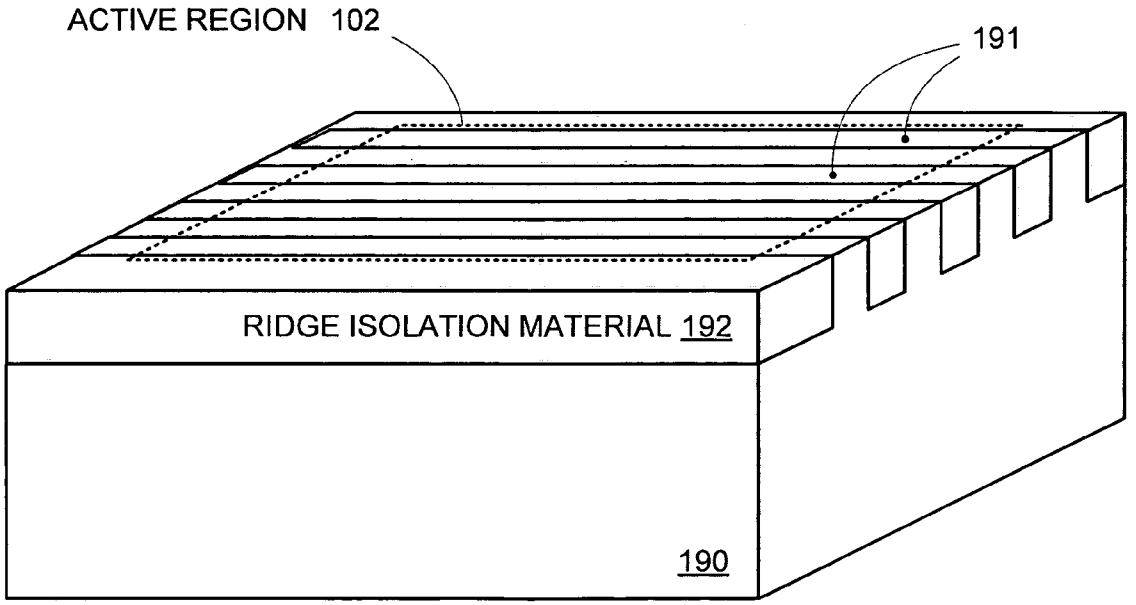
ACTIVE REGION 102
191
RIDGE ISOLATION MATERIAL 192
190

FIG. 2B

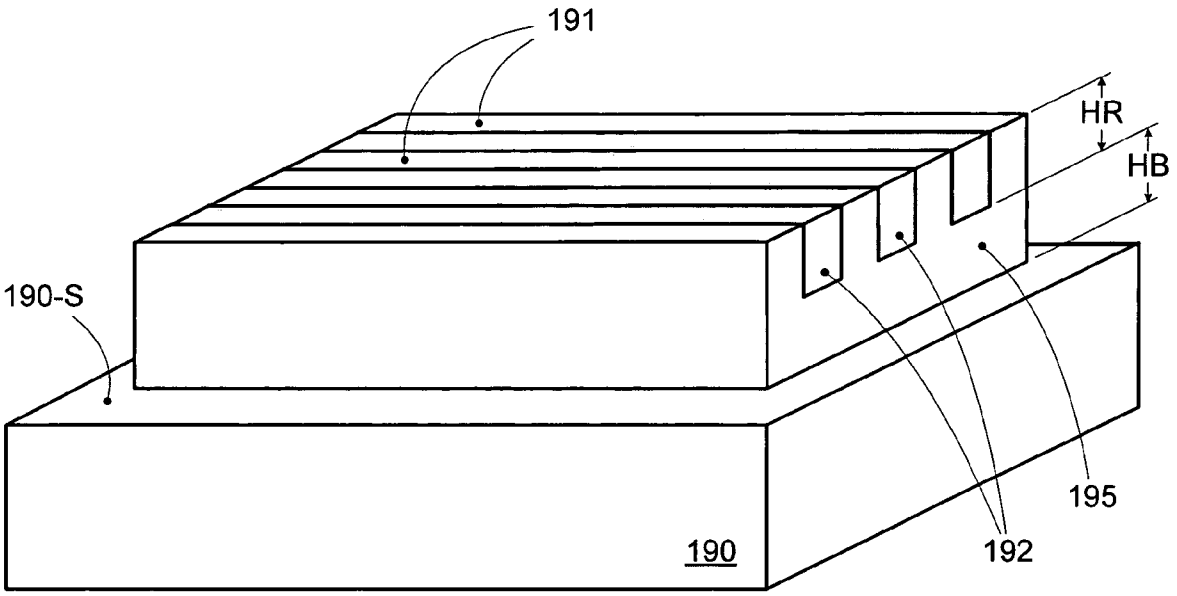
191
HR
HB
190-S
195
192
190

FIG. 2C

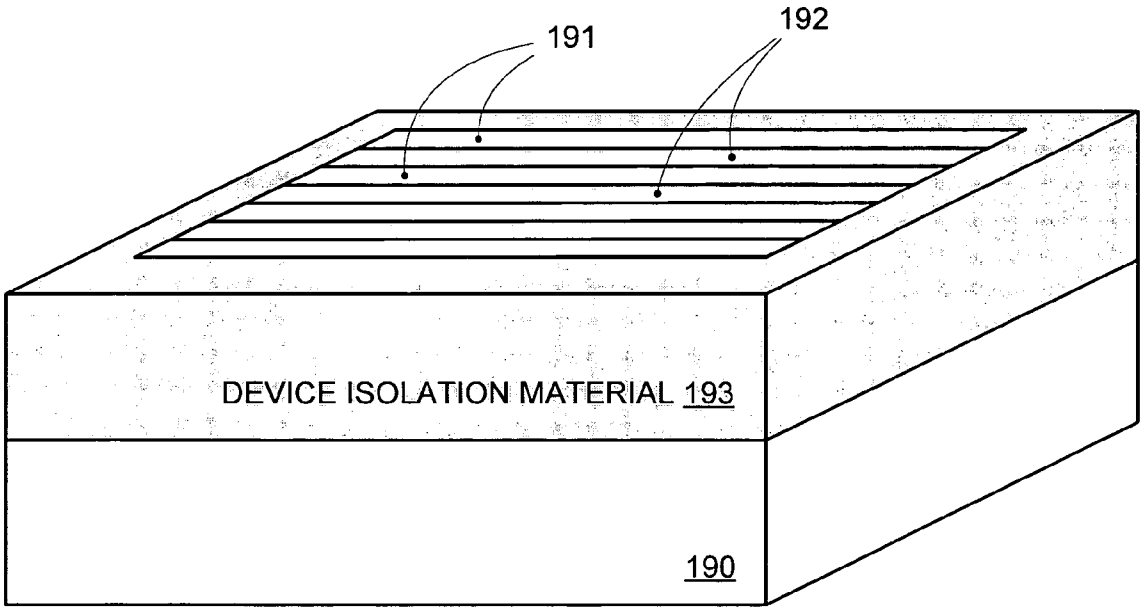
191
192
DEVICE ISOLATION MATERIAL 193
190

FIG. 2D

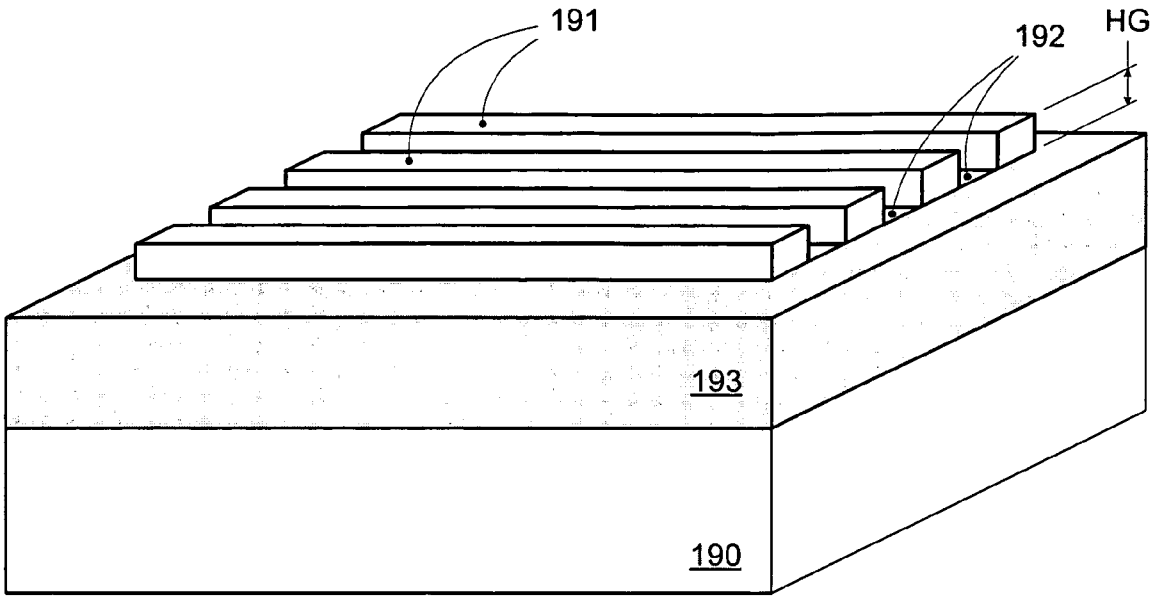

FIG. 2E

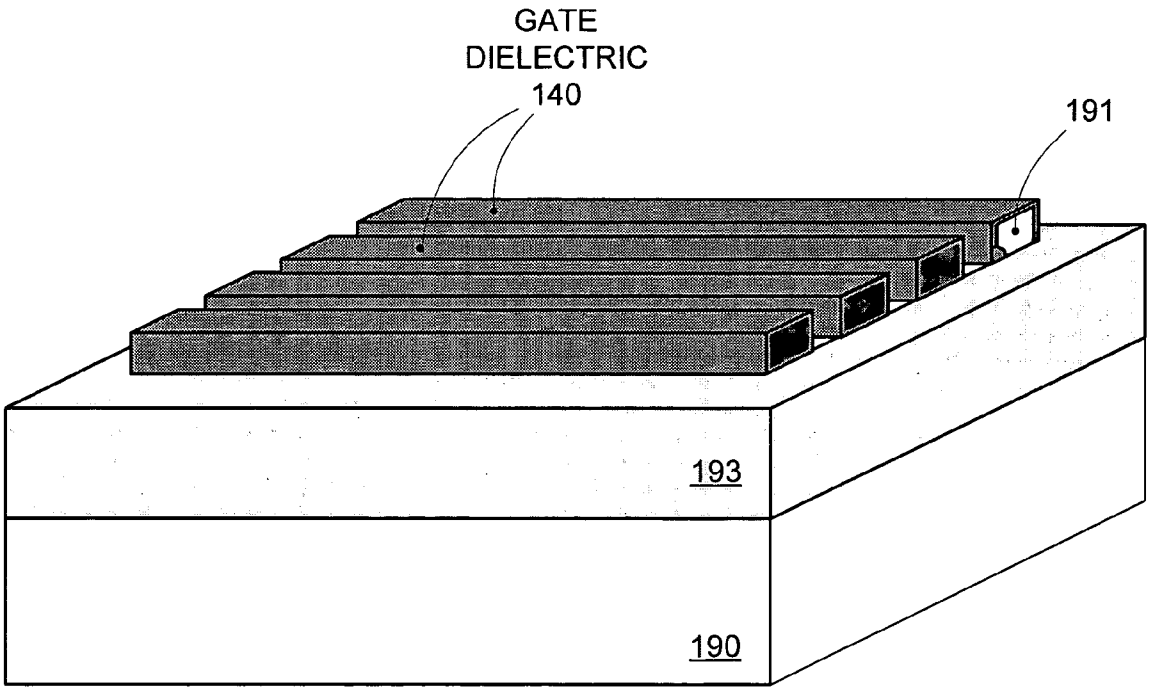

FIG. 2F

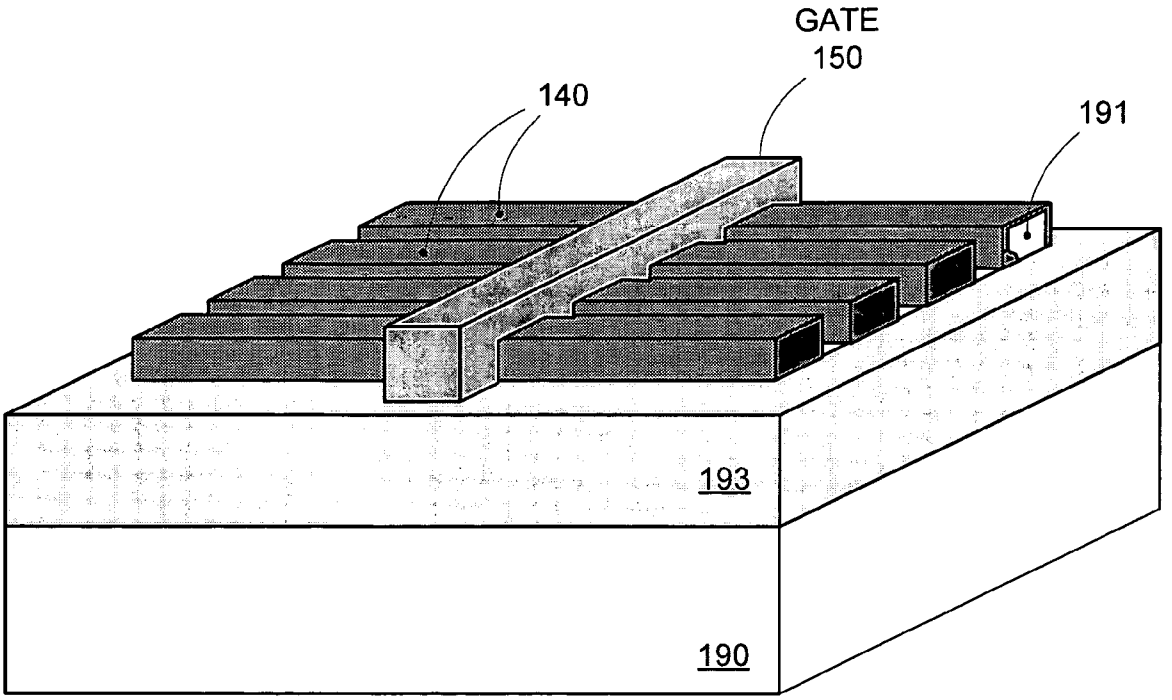
GATE
150
140
191
193
190

FIG. 2G

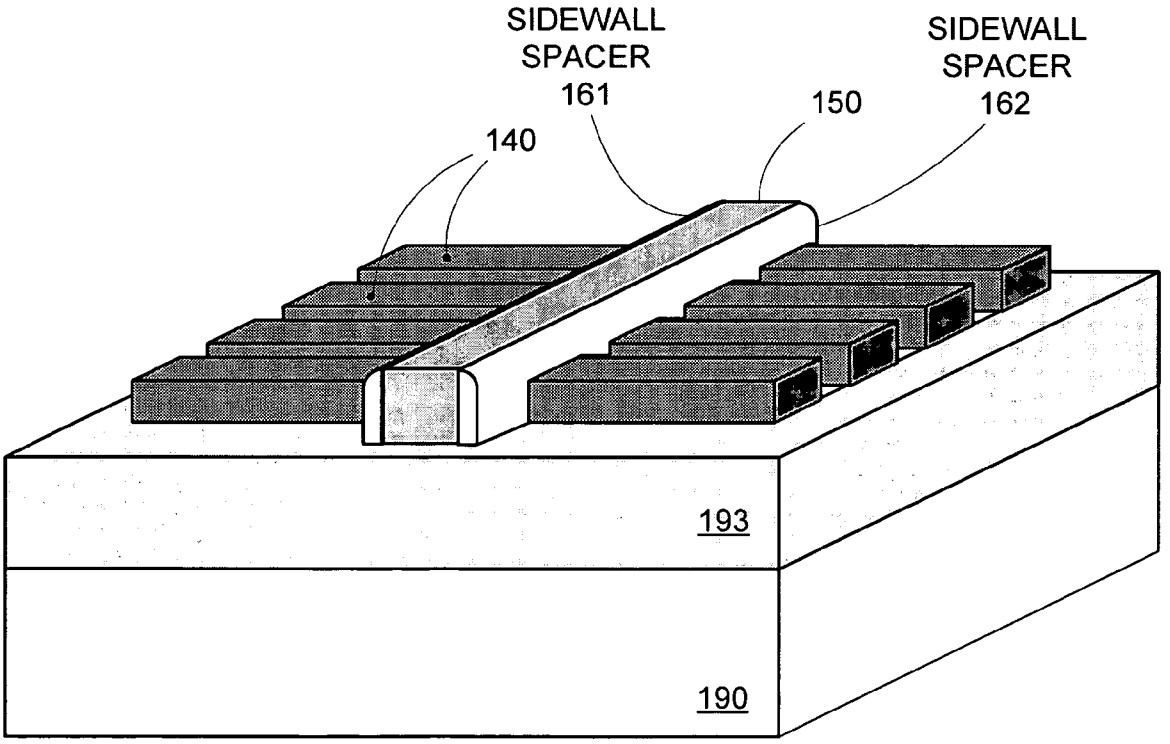
SIDEWALL
SPACER
161
SIDEWALL
SPACER
162
150
140
193
190

FIG. 2H

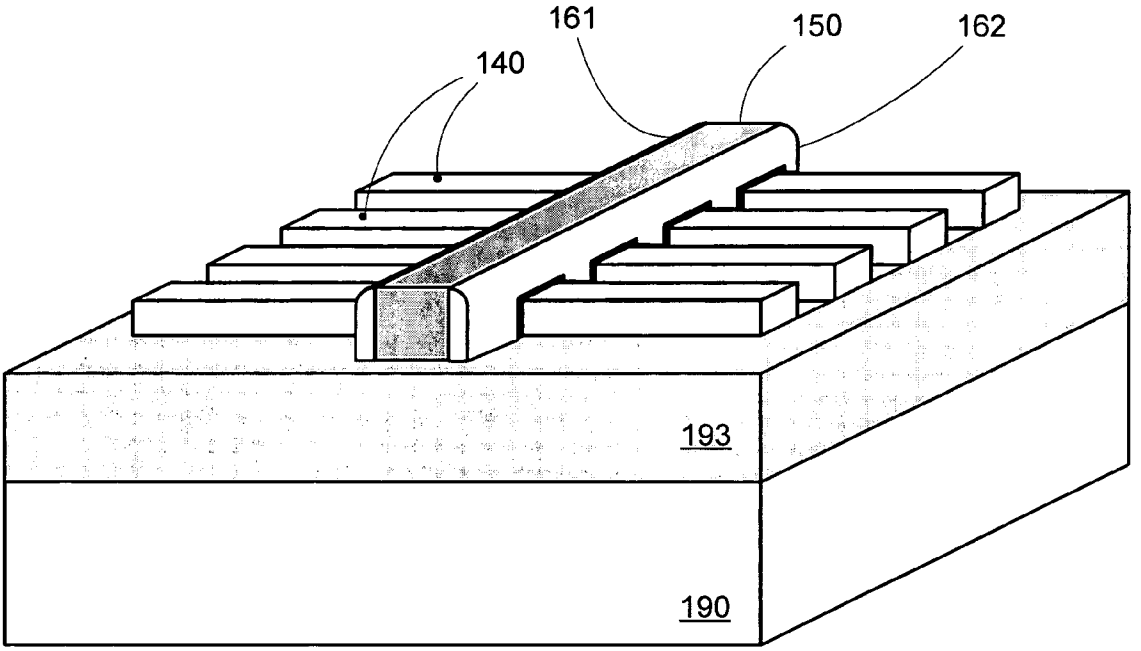
161
150
162
140
193
190

FIG. 2I

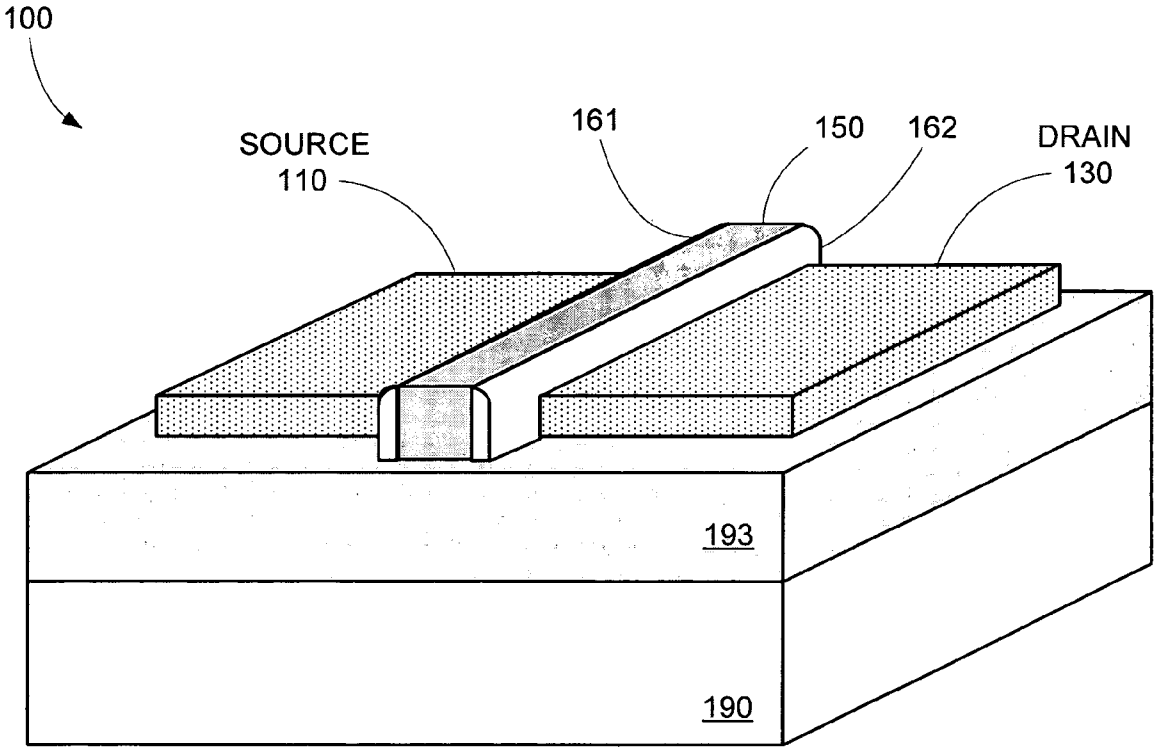
100
SOURCE
110
161
150
162
DRAIN
130
193
190

FIG. 2J

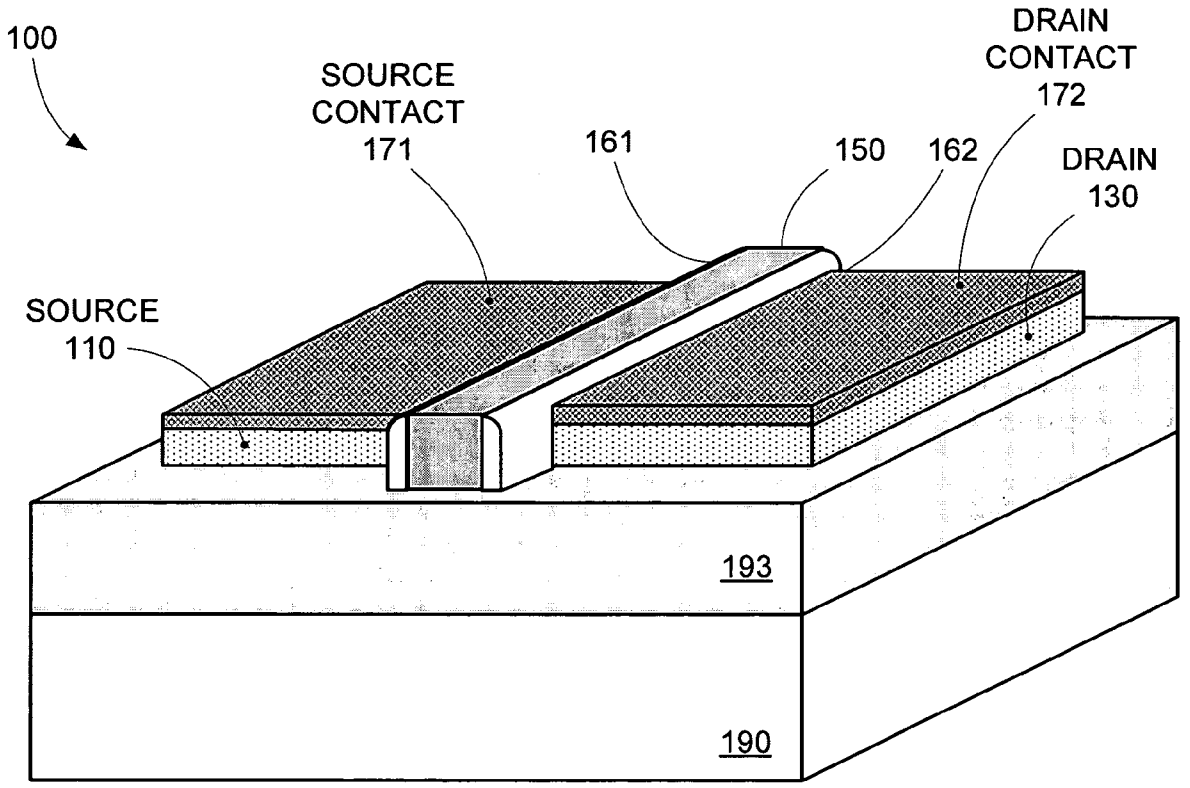
100
SOURCE
CONTACT
171
161
150
162
DRAIN
CONTACT
172
DRAIN
130
SOURCE
110
193
190

FIG. 2K

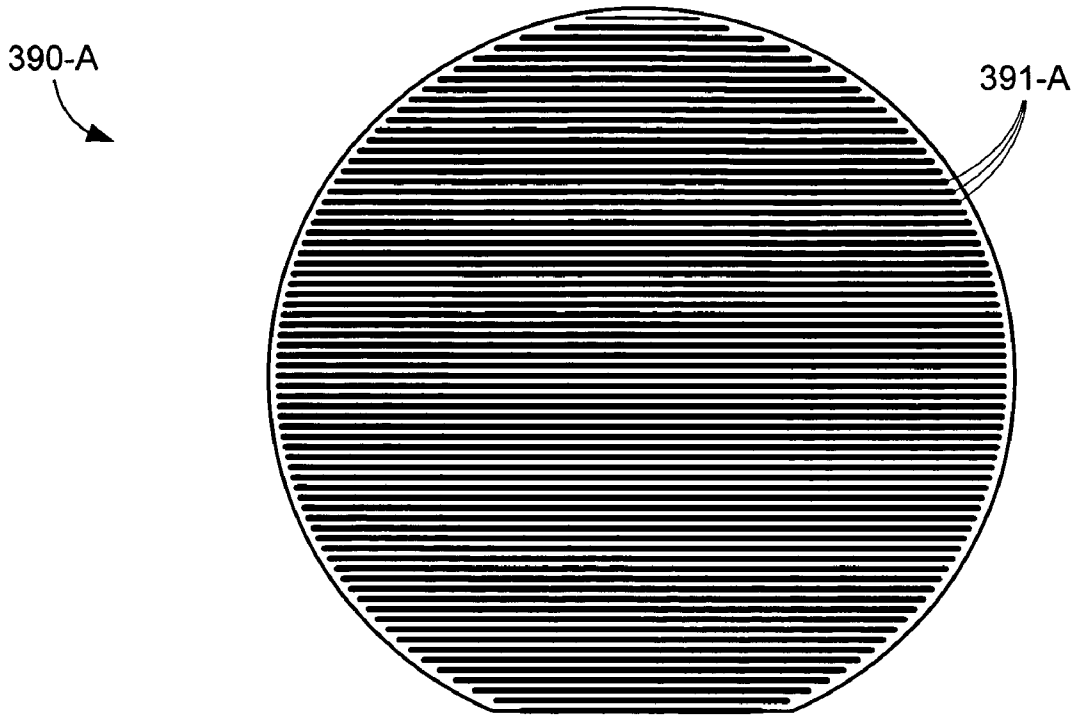

FIG. 3A

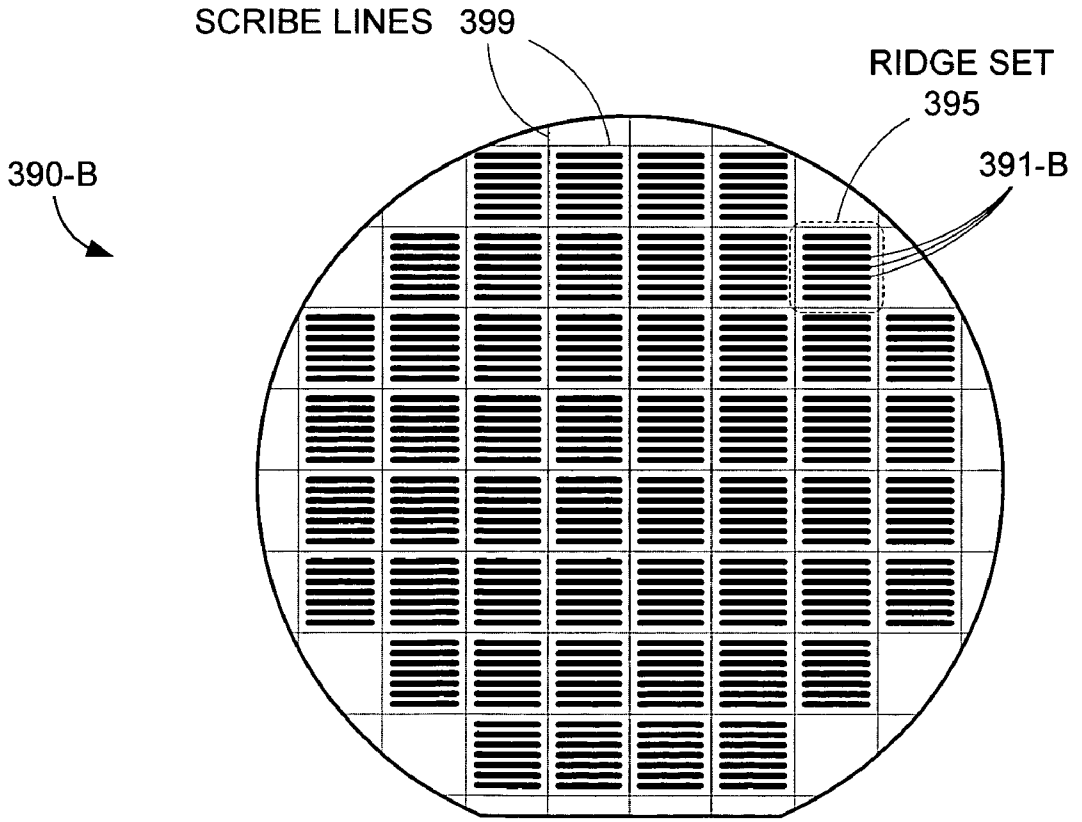

FIG. 3B

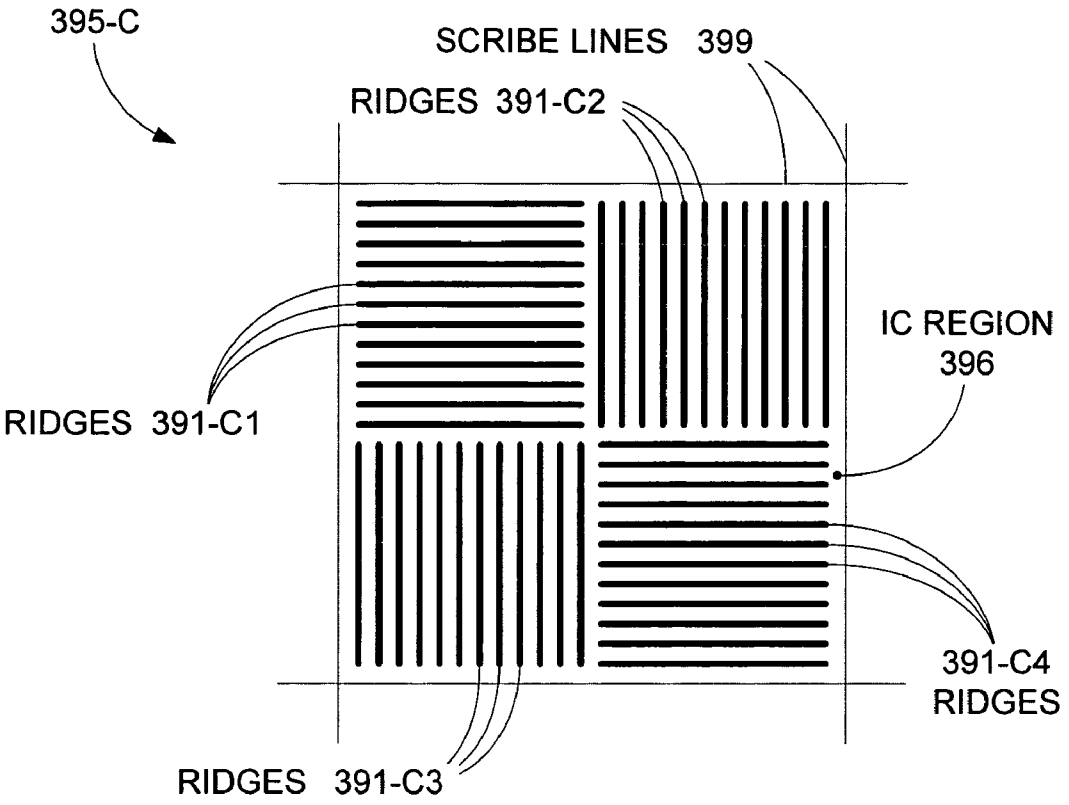
395-C
SCRIBE LINES 399
RIDGES 391-C2
IC REGION
396
RIDGES 391-C1
391-C4
RIDGES
RIDGES 391-C3

FIG. 3C

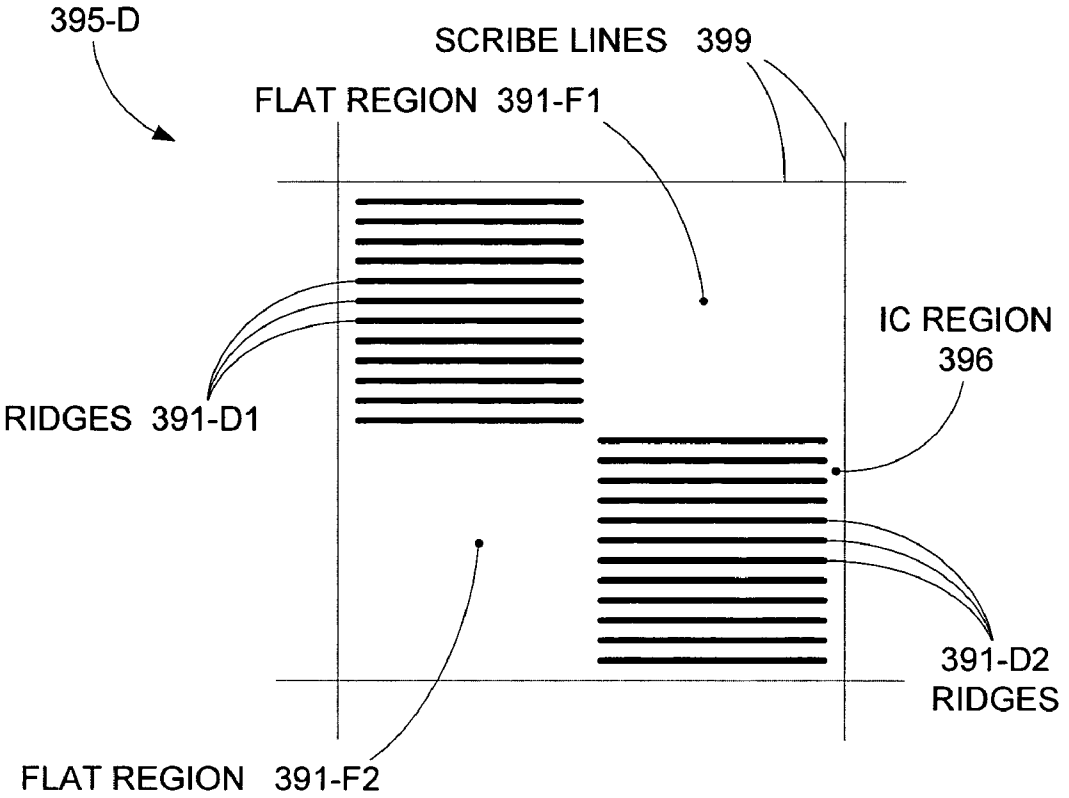
395-D
SCRIBE LINES 399
FLAT REGION 391-F1
IC REGION
396
RIDGES 391-D1
391-D2
RIDGES
FLAT REGION 391-F2

FIG. 3D

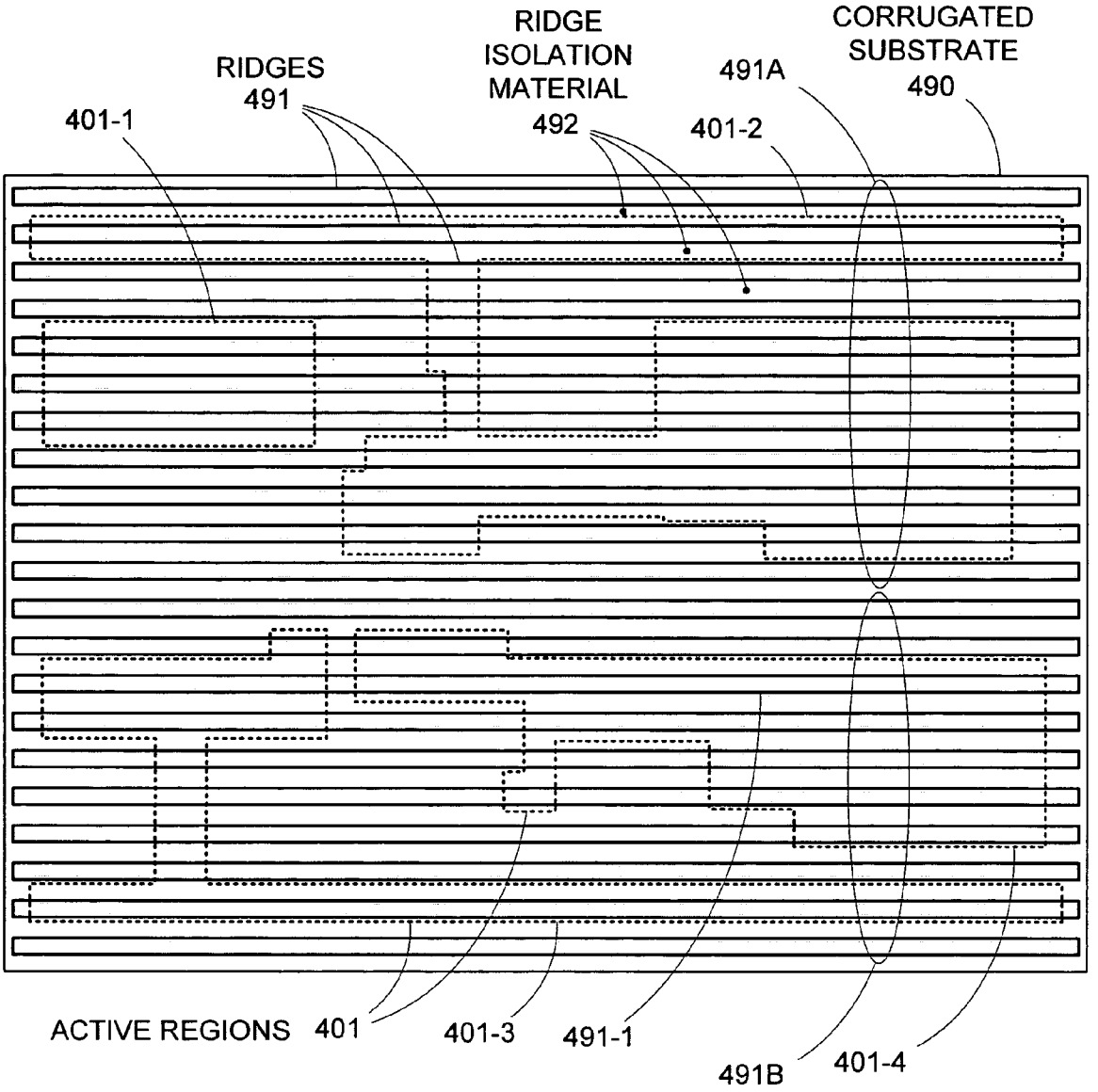
RIDGES
491
RIDGE
ISOLATION
MATERIAL
492
CORRUGATED
SUBSTRATE
490
491A
401-1
401-2
ACTIVE REGIONS
401
401-3
491-1
491B
401-4

FIG. 4A

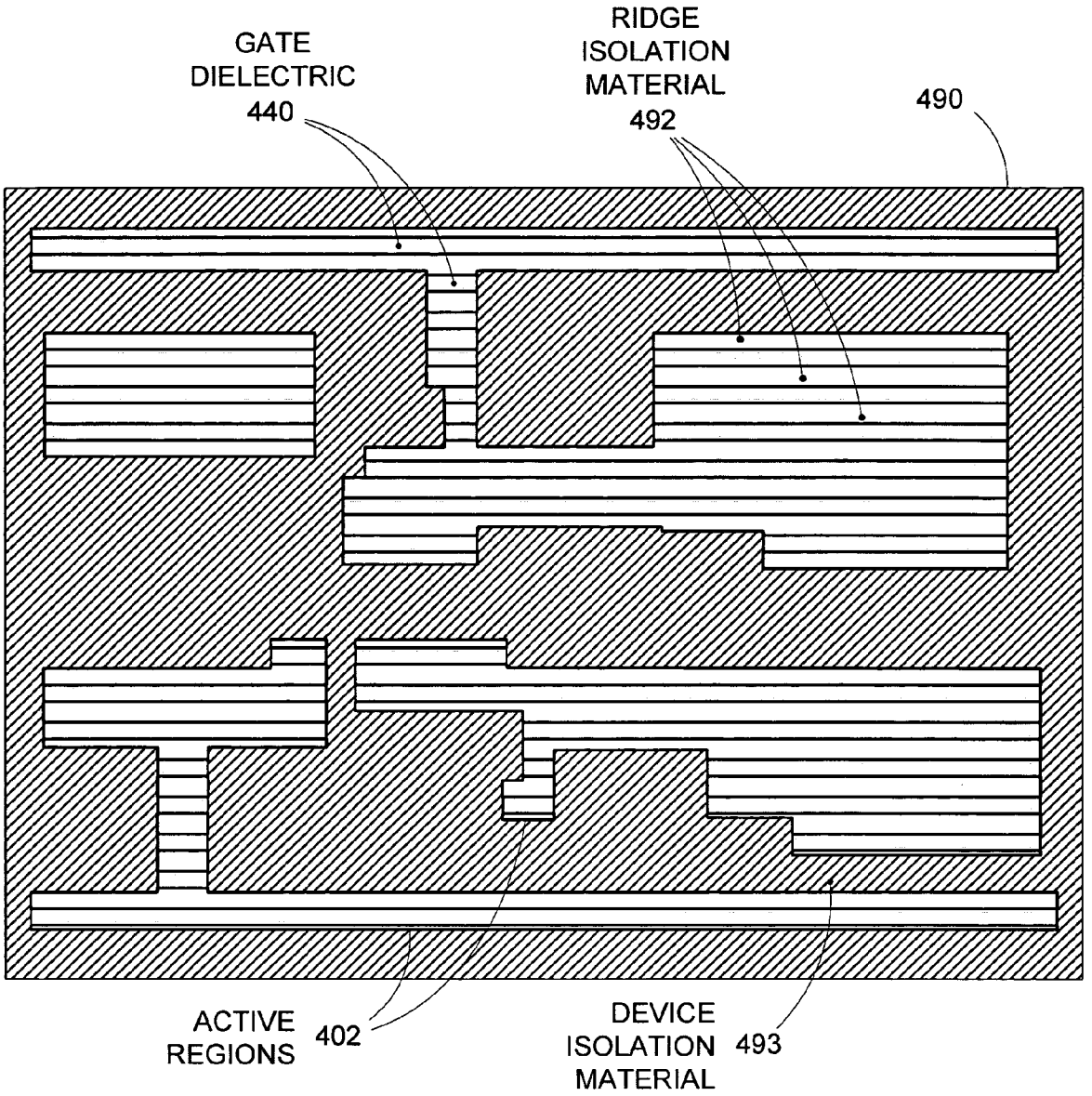
GATE
DIELECTRIC
440
RIDGE
ISOLATION
MATERIAL
492
490
ACTIVE
REGIONS
402
DEVICE
ISOLATION
MATERIAL
493

FIG. 4B

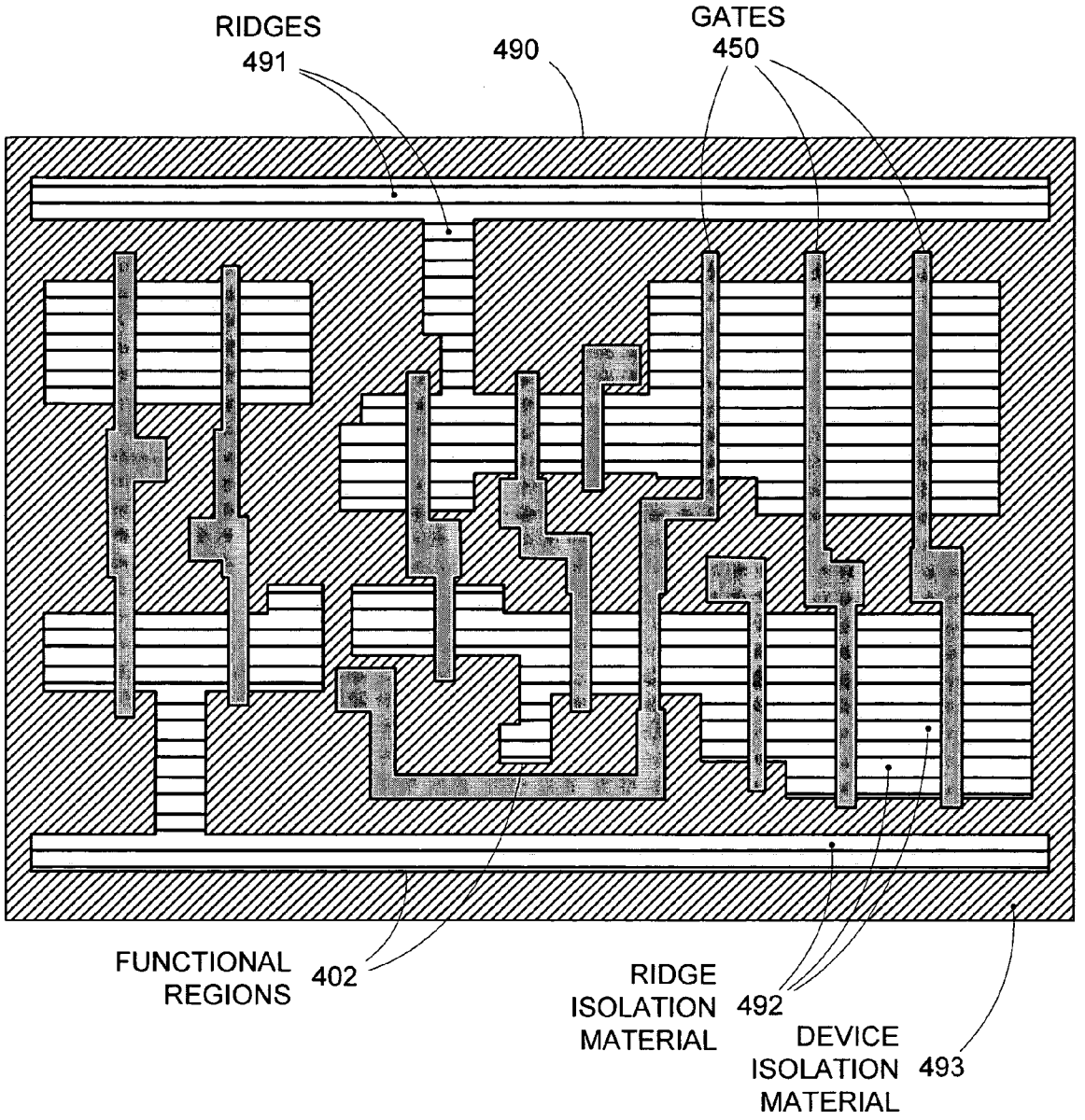
RIDGES
491
490
GATES
450
FUNCTIONAL
REGIONS
402
RIDGE
ISOLATION
MATERIAL
492
DEVICE
ISOLATION
MATERIAL
493

FIG. 4C

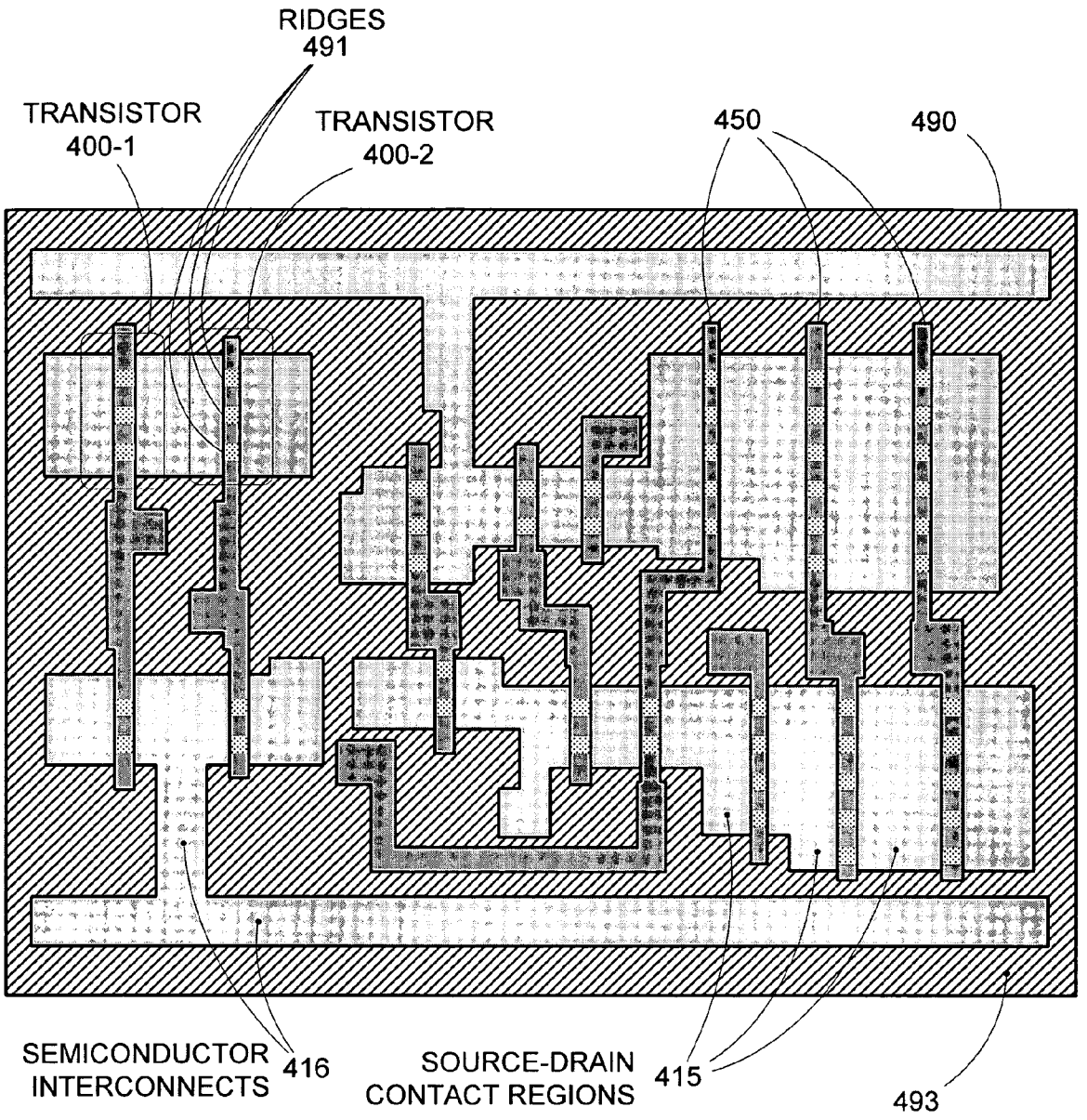
RIDGES
491
TRANSISTOR
400-1
TRANSISTOR
400-2
450
490
SEMICONDUCTOR
INTERCONNECTS
416
SOURCE-DRAIN
CONTACT REGIONS
415
493

FIG. 4D

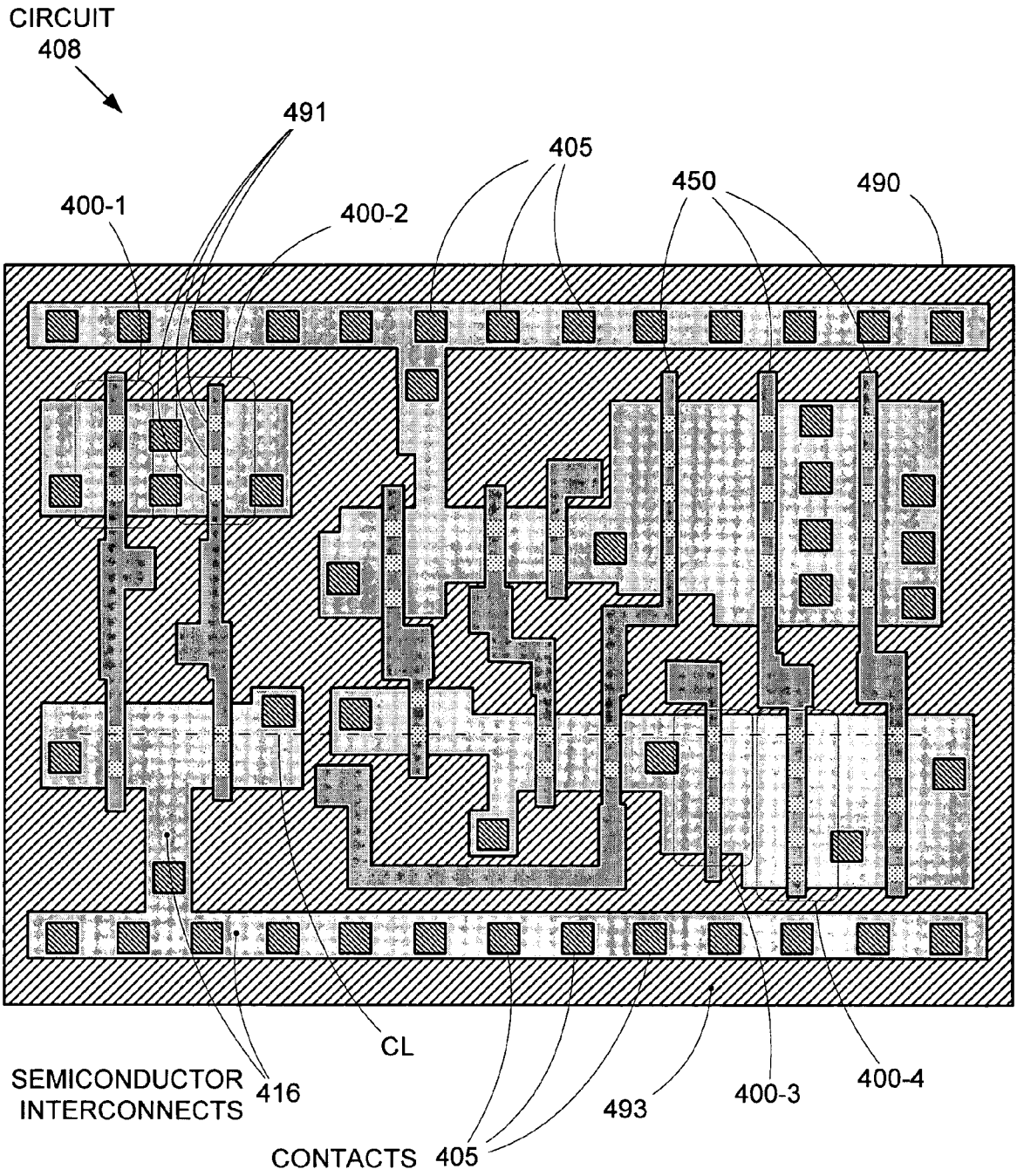
CIRCUIT
408
491
405
450
490
400-1
400-2
CL
SEMICONDUCTOR
INTERCONNECTS
416
493
400-3
400-4
CONTACTS
405

FIG. 4E

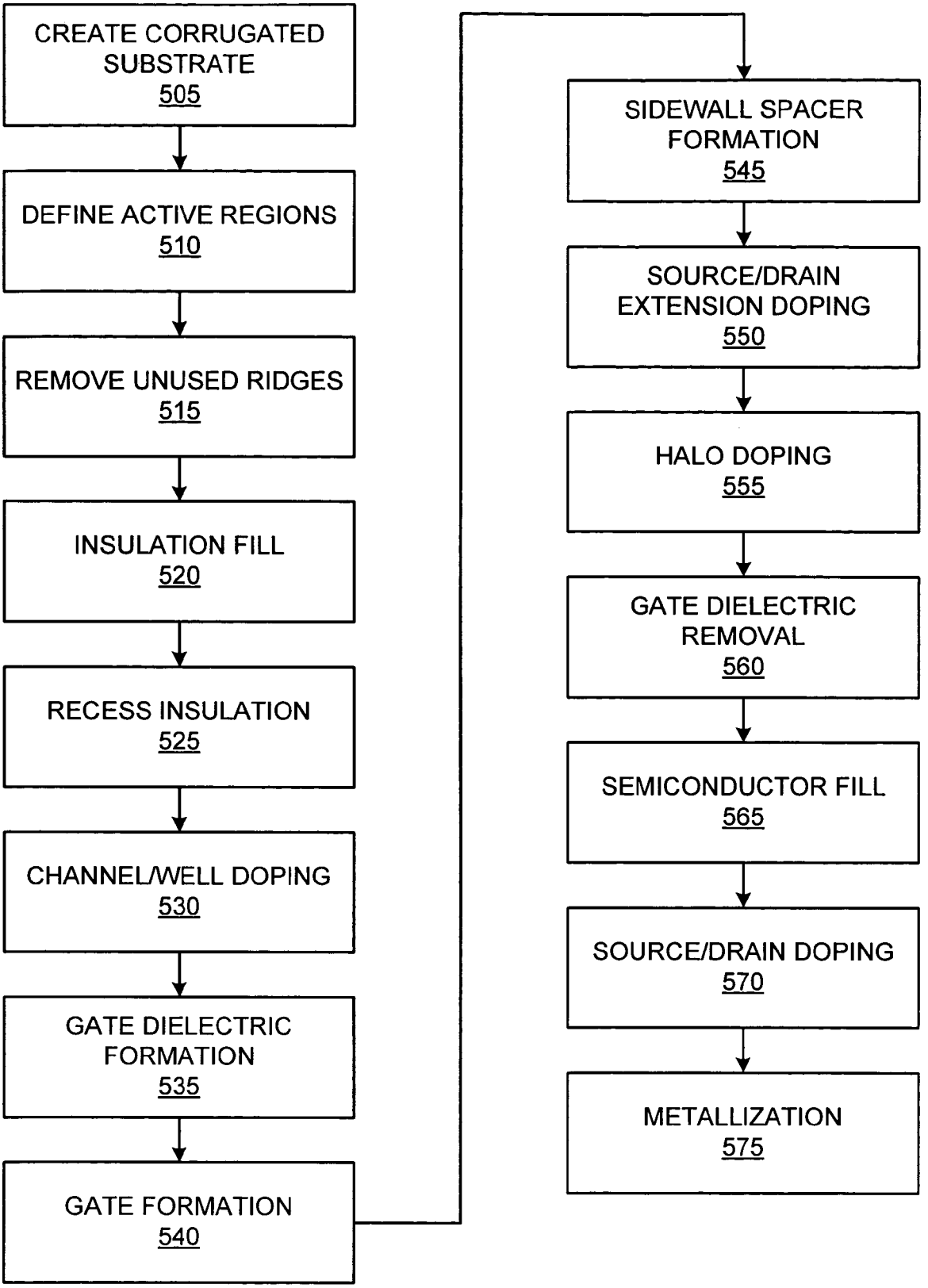
CREATE CORRUGATED SUBSTRATE 505
DEFINE ACTIVE REGIONS 510
REMOVE UNUSED RIDGES 515
INSULATION FILL 520
RECESS INSULATION 525
CHANNEL/WELL DOPING 530
GATE DIELECTRIC FORMATION 535
GATE FORMATION 540
SIDEWALL SPACER FORMATION 545
SOURCE/DRAIN EXTENSION DOPING 550
HALO DOPING 555
GATE DIELECTRIC REMOVAL 560
SEMICONDUCTOR FILL 565
SOURCE/DRAIN DOPING 570
METALLIZATION 575

FIG. 5

SEGMENTED CHANNEL MOS TRANSISTOR

BACKGROUND OF THE INVENTION

1. Field of the Invention

The invention relates to the field of semiconductor integrated-circuit devices and manufacturing, and in particular to structures for enhancing miniature transistor manufacturability and performance.

2. Related Art

Semiconductor integrated-circuit (IC) manufacturers face growing challenges to accurately and reliably produce ever-smaller transistors in order to improve the cost and performance (speed and/or functionality) of modern electronic devices. The most basic building block used in a digital IC device is the metal-oxide-semiconductor field effect transistor (MOSFET). As MOSFETs are scaled below 100 nm in minimum lateral dimension (i.e., the minimum feature size such as the gate length is less than 100 nm), size-related performance and manufacturing issues become increasingly significant.

For example, the short gate lengths in modern MOSFETs can result in relatively large source-to-drain leakage currents. Such leakage currents can cause ICs incorporating those MOSFETs to exhibit undesirably large static power consumption. Conventional efforts to suppress source-to-drain leakage current typically involve increasing the net dopant concentration in the channel region (e.g., to a net dopant concentration greater than 10^{18} atoms/cm^3), increasing gate capacitance, and decreasing the depths of the source and drain junctions adjacent to the channel. A high net dopant concentration in the channel region serves to confine the drain-induced lateral electric field to the drain region, and thereby minimizes the effect of drain bias on the electric potential in the channel region near to the source. At the same time, by increasing the capacitive coupling between the gate electrode and the channel region (e.g., by decreasing the thickness of the gate dielectric), dominant control over the channel potential (i.e., controlling whether the transistor is on or off) is maintained by the gate electrode rather than the drain, thereby allowing the gate-induced electric field to more effectively suppress source-to-drain leakage current. By keeping the depths of the source and drain junctions adjacent to the channel shallower than the length of the channel region, sub-surface leakage currents can be suppressed.

Unfortunately, decreasing the gate dielectric thickness leads to undesirable leakage between the gate electrode and channel region. Furthermore, carrier mobility in the small channel regions of modern MOSFETS can be significantly degraded by high dopant concentration, which results in lower "on-current" for the transistor. The parasitic series resistance of the source and drain regions increases with decreasing junction depth, which also results in lower on-current for the transistor. Therefore, as steps are taken in modern MOSFET designs to reduce static power consumption (i.e., reduce source-to-drain leakage current), overall transistor performance (i.e., on-current) can suffer.

Another problem associated with smaller MOSFET dimensions relates to the sensitivity of device performance to dimensional variation. For devices formed using 180 nm technology generation (and below) processes, relatively small differences in, for example, gate length can result in significant performance differences. However, the IC manufacturing processes used to create those devices (e.g., optical lithography) are unable to provide the device-to-device dimensional consistency required to render such performance differences negligible. Consequently, circuit designers must design for worst-case scenarios to accommodate the wide range of device performance levels, thereby sacrificing overall IC performance to accommodate manufacturability concerns.

Accordingly, it is desirable to provide structures and methods that allow high-performance, low-static-power, and low-variability sub-100 nm MOSFET production.

SUMMARY OF THE INVENTION

Conventional metal-oxide-semiconductor field effect transistor (MOSFET) designs face significant challenges as they are scaled down to improve cost and/or performance with each new generation of technology used to manufacture integrated circuits (ICs). In particular, the techniques used to reduce static power consumption by minimizing source-to-drain leakage current (e.g., increased channel doping, decreased gate-dielectric thickness, and decreased source and drain junction depths) tend to also decrease transistor performance by decreasing on-current. By forming MOSFETs using a semiconductor substrate having precisely-formed and regularly-spaced stripes (ridges of semiconductor material(s)), both high performance (i.e., high on-current) and low static power consumption (i.e., low source-to-drain leakage current) can be achieved. The stripes enable the formation of segmented channel regions that accommodate a wide range of gate-electrode configuration options and also provide greater performance consistency between devices.

In one embodiment, a MOSFET can include a segmented channel region, in which one or more dimensionally precise ridge(s) of semiconductor material (or materials) connect the source and drain regions. The ridges can themselves be formed on an elevated base region that extends a predetermined height above the adjacent substrate surfaces. An insulating material partially surrounds the ridge(s), so that a top portion ("tip") of each ridge is exposed prior to the formation of the gate stack (i.e. the gate-dielectric and gate-electrode layers). A gate electrode (and interposing gate-dielectric layer(s)) for each ridge is formed over the exposed tips of the ridges and "wraps" around those tips to provide enhanced control over source-to-drain leakage currents. (The gate electrode "straddles" the top portion of each ridge.) Heavily doped sub-surface regions within the ridges that begin at or near to the bottom of the tip (corresponding to the level of the insulating material) serve to further reduce source-to-drain leakage currents, thereby minimizing the static power consumption of the transistor. According to various other embodiments, any on-current enhancement or leakage-current reduction techniques applicable to conventional MOSFET constructions can also be applied.

In another embodiment, an IC (and method for producing the IC) incorporates multiple MOSFETs formed on pre-existing ridges on a corrugated substrate. Since the ridges on the corrugated substrate are geometrically very simple and very regular, high-precision fabrication techniques (e.g., imprint lithography or spacer lithography) can be used that would normally be impractical for actual device production. Once the corrugated substrate is available, the ridges on the substrate can be patterned based on the desired functional regions for the IC (i.e., by removing the ridges in the non-functional regions), and then forming an insulation layer around and between the functional regions. Gate dielectric layer(s) and gate electrodes can then be formed over the ridges in the desired transistor locations, and various doping operations can be performed to define the

source, drain, and channel regions for the MOSFETs. The IC formed in this manner will include MOSFETs having channel regions formed by one or more of the ridges, which helps to ensure that the MOSFETs exhibit accurate and consistent performance from device to device. Adjacent MOSFETs in the IC (in the direction of the original ridges) can have precisely aligned channel region semiconductor segments, because those segments were originally formed from continuous ridges (i.e., the pre-existing ridges on the corrugated substrate). In various embodiments, the MOSFETs can include various source-to-drain leakage current reduction techniques such as heavily doped sub-surface regions in channel regions and wrapped gates (i.e., gates that wrap around the top portions of the ridges in the channel regions). In another embodiment, ridges in a pattern between two transistor locations can be filled in with electrically conductive material to form an electrical interconnect between the two transistor locations, thereby reducing metallization requirements.

A semiconductor wafer can include one or more sets of precisely formed ridges, with each set of ridges including parallel ridges having the same height, width, and spacing. In one embodiment, the ridges in a single set of ridges can span the entire wafer. In another embodiment, different sets of ridges can be formed at different locations on the wafer. For example, each die region between scribe lines can have a particular arrangement of ridge sets, with ridges in different sets running in different directions to provide device fabrication flexibility.

The invention will be more fully understood in view of the following description and drawings.

BRIEF DESCRIPTION OF THE DRAWINGS

FIGS. **1**A, **1**B, **1**C, **1**D, **1**E, **1**F, **1**G, and **1**H are various views of a transistor including a segmented channel region.

FIGS. **2**A, **2**B, **2**C, **2**D, **2**E, **2**F, **2**G, **2**H, **2**I, **2**J, and **2**K are steps in a manufacturing process for a transistor having a segmented channel region.

FIGS. **3**A, **3**B, **3**C, and **3**D are top views of different corrugated substrates that can be used in the manufacture of ICs that incorporate transistors having segmented channel regions.

FIGS. **4**A, **4**B, **4**C, **4**D, and **4**E are steps in a manufacturing process for an IC that incorporates transistors having segmented channel regions.

FIG. **5** is a flow diagram of a process for manufacturing an IC that incorporates transistors having segmented channel regions.

DETAILED DESCRIPTION

Conventional metal-oxide-semiconductor field effect transistor (MOSFET) designs face significant problems as those designs are scaled down to improve the cost and performance of integrated circuits (ICs). In particular, the techniques used to reduce static power consumption by minimizing source-to-drain leakage current (e.g., increased channel doping, decreased gate-dielectric thickness, decreased source and drain junction depths) tend to also decrease transistor performance by decreasing on-current. By forming MOSFETs over a substrate having precisely-formed and regularly-spaced stripes (ridges of semiconductor material(s)), both high performance (i.e., high on-current) and low static power consumption (i.e., low source-to-drain leakage current) can be achieved with good uniformity. The stripes enable the formation of segmented channel regions that accommodate a wide range of gate-electrode configuration options and also provide greater performance consistency between devices.

FIG. **1**A shows a top view of an exemplary transistor **100** that includes a segmented channel region. Transistor **100** is formed on a substrate **190** and is surrounded by device isolation material **193** (e.g., shallow trench isolation), and includes a source **110**, a drain **130**, a gate **150**, sidewall spacers **161** and **162**, a source contact region **171**, and a drain contact region **172**. Gate **150** (with a gate length LG) is located between source **110** and drain **130** and is formed over a channel region **120** in substrate **190**. In various embodiments, gate **150** can be formed from any semiconductor/conductor material, including doped silicon, doped silicon-germanium alloy, undoped or doped silicide, undoped or doped germanosilicide, metal, metal-nitride, conductive metal-oxide, or any combination of layers of these materials, among others. Sidewall spacers **161** and **162** lie over at least a portion of source **110** and drain **130**, respectively, and serve to offset the gate **150** from source contact region **171** and drain contact region **172**, respectively. In various embodiments, source contact region **171** and drain contact region **172** may each be comprised in part of a metal-semiconductor compound such as silicide, germanide, or germanosilicide.

As indicated by the dotted lines, channel region **120** includes multiple ridges **191** that run between source **110** and drain **130**. Ridges **191** are formed from at least one semiconductor material and may be homogenous structures (e.g., silicon, silicon-germanium alloy, germanium, silicon-carbon alloy, compound semiconductor materials, or aligned carbon nanotubes) or may have layers of different materials (e.g., a silicon layer on a dielectric layer or a silicon layer on a silicon-germanium layer). Ridges **191** are formed on an elevated base region **195** that rises from substrate **190**, as shown in FIG. **1**B. FIG. **1**B is a cross-sectional view of transistor **100** through view location A—A (rotated 90° for clarity). Each ridge **191** has a width W, and is spaced from adjacent ridges by a spacing SP. Furthermore, each ridge **191** extends a height HR above elevated base region **195**, which itself rises a height HB from the adjacent surfaces **190**-S of substrate **190**.

Note that while four ridges **191** are depicted for exemplary purposes, transistor **100** can include any number of ridges **191**, and that the particular sizing, spacing, and quantity of ridges **191** (and also of elevated base region **195**) included in transistor **100** is determined by the desired properties of transistor **100**. Note further that because ridges **191** are identified relative to substrate **190**, ridges **191** continue to exist as "ridges" even covered with other materials (e.g., even though ridge isolation material **192**, device isolation material **193**, gate dielectrics **140**, and gate **150** completely cover ridges **191**, ridges **191** are still considered to be ridges.)

In addition, while depicted as homogenous extensions of elevated base region **195** (and hence substrate **190**) for exemplary purposes, ridges **191** can comprise any construction (e.g., as described in greater detail below, each of ridges **191** can include multiple layers of different semiconductor or semiconductor and dielectric materials) and may even be formed from a different material(s) than elevated base region **195** and/or substrate **190**. As described in greater detail below, each of ridges **191** is a highly precise structure that therefore provides highly quantifiable performance measures. Therefore, achieving a desired performance for transistor **100** simply entails incorporating an appropriate number of ridges **191** (e.g., if each ridge provides 0.1 mA of

on-current and the desired on-current for transistor **100** must be at least 0.5 mA, five ridges **191** can be included in transistor **100**).

Transistor **100** is isolated from adjacent devices by device isolation material **193** (e.g., silicon dioxide, silicon nitride, or any other dielectric material(s)), which extends down to surfaces **190**-S of substrate **190** (i.e., down to the bottom of elevated base region **195**). Ridge isolation material **192** (which can be formed from the same material(s) or different material(s) than device isolation material **193**) fills the inter-ridge regions to a distance HG below the top of ridges **191**. Gate **150** is formed over the top portions of ridges **191**, separated from those top portions by gate dielectric **140** (which can be formed from any dielectric material(s), including silicon dioxide, silicon oxynitride, silicon nitride, hafnium dioxide, hafnium silicate, $HfSiO_xN_y$, $HfAlO_xN_y$, $HfAlO_x$, zirconium dioxide, zirconium silicate, or other high-permittivity dielectric, or any combination of layers of these materials, among others). Thus, when appropriate voltages are applied to gate **150** and between source **110** and drain **130**, each of ridges **191** conducts a portion of the total on-current that flows through transistor **100**.

Note that gate dielectric **140** and gate **150** "wrap" around the top portions of ridges **191** (i.e., gate dielectric **140** and gate **150** extend down the sides of ridges **191** by recess distance HG). This wrapping configuration allows gate **150** to more effectively control the electric potential distribution within channel region **120**, and can therefore enhance on-current while minimizing source-to-drain leakage current. To further enhance performance, each ridge **190** can include a sub-surface heavily doped region **191**P that provides a region of high dopant concentration below the top surface of each ridge (as described in greater detail below).

Note further that in various other embodiments, ridges **191** can exhibit a multilayered construction (i.e., two or more layers of different materials). For example, each ridge **191** may include a semiconductor layer formed over a dielectric layer (e.g., to reduce body leakage). Each ridge **191** may also include multiple layers of semiconductor materials (e.g., to induce a desired stress within channel region **120**). In addition, transistor **100** may include any other type of stress engineering structures, as indicated by optional stress engineering structure **155** (indicated by a dotted line). For example, stress engineering structure **155** could be a stressed capping layer formed over source **110**, drain **130**, and gate **150** (and any intermediate structures such as sidewall spacers **161** and **162** shown in FIG. **1**A) to induce a desired compressive or tensile stress within channel **120** in each ridge **191** for enhancing carrier mobility.

FIG. **1**C shows a cross-sectional view of transistor **100** through view location B—B indicated in FIG. **1**A. View location B—B provides a cross-sectional view running parallel to the direction of current flow between source **110** and drain **130** and through one of ridges **191**, and therefore indicates the full doping profiles in and around channel region **120**. As indicated in FIG. **1**C, source **110** and drain **130** are doped regions within ridge **191**. Note that source **110** and drain **130** can be formed in portions of transistor **100** that may originally have been discrete ridges (i.e., continuous with ridges **191** in channel region **120**) but were subsequently filled (as described in greater detail below) to provide large planar source contact region **171** and drain contact region **172**, respectively, for the landing of metallic interconnects in these regions.

Note further that source **110** and drain **130** can optionally include shallow extensions such as lightly doped source **110**-L and lightly doped drain **130**-L, respectively, to reduce short-channel and hot-carrier effects. Typically, source and/or drain extensions such as lightly doped source **110**-L and lightly doped drain **130**-L are formed by performing a shallow ion implant operation after the formation of gate **150**. Sidewall spacers **161** and **162** are then formed on each side of gate **150**, and a subsequent higher-dose, deeper implant operation is performed. Sidewall spacers **161** and **162** (which can be formed from any dielectric material(s), including silicon dioxide, silicon oxynitride, silicon nitride, hafnium dioxide, hafnium silicate, $HfSiO_xN_y$, $HfAlO_xN_y$, $HfAlO_x$, zirconium dioxide, zirconium silicate, or other high-permittivity dielectric, or any combination of layers of these materials, among others) block dopant penetration into the semiconductor, thereby allowing lightly doped source **110**-L and lightly doped drain **130**-L, respectively, to remain as discrete shallow extensions after this second implant operation. Note that if corrugated substrate is an SOI substrate (e.g., with ridges **191** formed on an insulation layer), or if ridges **191** themselves include an insulating layer, the heavily doped regions of source **110** and drain **130** might not be deeper than lightly doped source **110**-L and lightly doped drain **130**-L, respectively.

Note further that in various other embodiments, lightly doped source **110**-L and lightly doped drain **130**-L (and/or source **110** and drain **130**) may be formed from material(s) other than doped semiconductor material. For example, to reduce parasitic series resistance, lightly doped source **110**-L and lightly doped drain **130**-L (and/or some or all of source **110** and drain **130**) may be formed from a metal-semiconductor compound (e.g., silicide, germanide, or germanosilicide, among others). In one embodiment, the regions of source **110** and drain **130** could be either undoped or doped prior to metal-semiconductor compound formation, so that the metal-semiconductor compound material formed in those regions may be undoped or doped, respectively.

Note also that in various other embodiments, transistor **100** may not include sidewall spacers **161** and **162** and/or lightly doped source **110**-L and lightly doped drain **130**-L. Note further that lightly doped source **110**-L and/or lightly doped drain **130**-L may or may not extend underneath the edges of gate **150**. Note further that due to the enhanced gate control provided by the "wrapped" gate **150**, in various other embodiments, the source and drain extensions may be eliminated, so that both source **110** and drain **130** may be implemented as singly doped regions. Note further that while depicted as extending below the bottom of ridges **191** for exemplary purposes, the depth D of source **110** and drain **130** below the surface of ridge **191** can alternatively be less than the overall height HR of ridge **191** (i.e., depth D is less than ridge height HR), so that ridge isolation material **192** (shown in FIG. **1**B), which starts from the base of ridge **191**, can effectively reduce the area of the junction between the source **110** and substrate **190**, and the area of the junction between the drain **130** and substrate **190**, thereby reducing junction leakage and capacitance.

Note further that while ridge **191** is depicted as a homogenous structure extending from elevated base region **195** for exemplary purposes, ridge **191** can exhibit any compositional structure. As noted above with respect to FIG. **1**B, ridge **191** could exhibit a multilayered structure that includes at least one layer of a semiconductor material. In other embodiments, ridge **191** could exhibit laterally changing material compositions. For example, channel region **120** (and the portion of ridge **191** below channel region **120**) could exhibit different semiconductor material(s) and/or

construction from the surrounding portions of ridge **191** (e.g., ridge **191** could include a dielectric region only under channel **120**).

FIG. **1**D shows a cross-sectional view of transistor **100** through view location C—C indicated in FIG. **1**A. View location C—C runs between two ridges **191**, parallel to the direction of current flow between source **110** and drain **130**. Therefore, FIG. **1**D depicts gate **150** (and sidewall spacers **161** and **162**) extending down below the top surface of ridge **191**. Specifically, gate **150** extends down to the level of ridge isolation material **192**. Note that because view location C—C runs between ridges **191**, the portions of source **110** and drain **130** on either side of gate **150** (and sidewall spacers **161** and **162**, if present) are actually fill regions **191**-F (i.e., regions formed by filling the space between the exposed portions of adjacent ridges **191**, as described in greater detail below).

As noted above, the conventional method of reducing source-to-drain leakage current by increasing channel doping has the undesirable side effect of reducing channel carrier mobility, thereby reducing overall on-current. Therefore, alternative approaches have been developed to take advantage of the fact that the bulk of source-to-drain leakage current occurs in regions where the electric field induced by the gate is limited, i.e., in the portion of the channel furthest from the gate. One approach to eliminate this leakage path is to use a steep retrograde channel doping profile, such as the "pulse-shaped doping" described in "Scaling the Si MOSFET: From Bulk to SOI to Bulk", by Ran-Hong Yan et al., *IEEE Transactions On Electron Devices*, vol. 39. no. 7, Jul. 1992. In the pulse-shaped doping approach, a heavily doped region is formed at some distance beneath the surface of a substrate (for example, by performing a high-energy ion implant operation, in which the implanted ions all penetrate to at least a desired depth below the surface). The dopant concentration profile created in this manner starts off low at the top surface of the substrate, then jumps to a high dopant concentration (the "pulse") at a desired distance below the surface, and then eventually falls back to a lower concentration. Note that in various other embodiments, the sub-surface heavy doping provided by the retrograde-doped region **191**P can extend to any depth, and can even extend into the bulk substrate region of substrate **190** (i.e., below the bases of ridges **191**), though it is preferable for the heavily-doped region **191**P to not extend past the depth of source **110** and drain **130** in order to minimize junction capacitance and junction leakage current.

By combining appropriately positioned retrograde channel doping (as indicated by sub-surface heavily doped region **191**P in FIGS. **1**B and **1**C) with the segmented channel construction of transistor **100**, a low source-to-drain leakage current can be achieved while still providing relatively high on-current performance.

Note that the change in doping concentration provided by sub-surface heavily doped region **191**P will be relatively abrupt, but will generally not be a precise step function. Instead, the dopant concentration will exhibit a relatively sharp gradient from the low dopant concentration channel region **120** to the high dopant concentration of retrograde doped region **191**P. For explanatory purposes, the boundary of sub-surface heavily doped region **191**P (i.e., the bottom of undoped or lightly doped channel region **120**) can be considered to be the location at which the dopant concentration reaches 50% of the maximum dopant concentration in sub-surface heavily doped region **191**P.

As depicted in FIG. **1**B, heavily doped regions **191**P are ideally located such that the undoped or lightly doped channel region **120** in each ridge **191** corresponds to the overlap R between gate **150** and each ridge **191**. In other words, the sub-surface heavily doped region **191**P preferably starts at the point where gate **150** ends along each ridge **191** (i.e., at distance HG below the top surface of ridge **191**). This design can provide an optimal trade-off between transistor performance and power consumption, since the channel region **120** in each ridge **191** is bounded on three sides by gate **150** to maximize gate control to achieve high on-current, and is bounded by sub-surface heavily doped region **191**P just below gate **150** to minimize source-to-drain leakage current. Note, however, that the dopant concentration profile of the sub-surface heavily doped region **191**P will typically not be a sharp step function (i.e., the dopant concentration will not abruptly jump to the maximum dopant concentration level). The actual dopant concentration profile of sub-surface heavily doped region **191**P will be a roughly exponential or Gaussian increase (until the maximum dopant concentration is reached). Therefore, benefits provided by sub-surface heavily doped region **191**P can generally be maximized if the distance from the top surface of ridge **191** at which sub-surface heavily doped region **191**P reaches 50% of the maximum dopant concentration is equal to or less than distance HG. Note that the boundary of sub-surface heavily doped region **191**P generally should not be located too close to (e.g., less than 5 nm away from) the top surface of ridge **191**, however, otherwise the transistor on-state drive current will be degraded. Thus, if distance HG is very small (e.g., less than 5 nm), then sub-surface heavily doped region **191**P should start below the point where gate **150** ends along each ridge **191**.

Note that any other techniques for creating sub-surface heavily doped regions can be used. For example, FIG. **1**E shows a cross-sectional view of a transistor **100-1** that is substantially similar to transistor **100** described with respect to FIGS. **1**A–**1**D, except that rather than incorporating a retrograde channel doping profile (**191**P), transistor **100-1** includes sub-surface heavily doped regions **191**P-HS and **191**P-HD. Sub-surface heavily doped regions **191**P-HS and **191**P-HD are formed using "halo" doping adjacent to lightly doped source **110**-L and lightly doped drain **130**-L, respectively. By creating a high dopant concentration at the source and drain extensions, this halo doping can reduce short channel effects, thereby minimizing source-to-drain leakage current. FIG. **1**F shows a cross-sectional view of a transistor **100-2** that is substantially similar to transistor **100-1** shown in FIG. **1**E, except transistor **100-2** includes sub-surface heavily doped regions **191**P-PS and **191**P-PD beneath lightly doped source **110**-L and lightly doped drain **130**-L, respectively. These "pocket" doped regions can provide the same type of leakage current reduction described with respect to sub-surface heavily doped regions **191**P-HS and **191**P-HD described with respect to FIG. **1**E.

Table 1 shows sample data for comparing the performance (on-state drive current and off-state source-to-drain leakage current, each normalized to the transistor layout width) of various n-channel implementations of transistor **100** (rows 1, 2, 3, 4, 5, and 6) against the performance specifications with no carrier mobility enhancement as published in the International Technology Roadmap for Semiconductors (ITRS), 2003 Edition (rows 7 and 8). Each of the implementations of transistor **100** is based on a fundamental set of implementation values, including a single ridge **191** in the channel region, a 20 nm spacing between ridges **191** (i.e., the total layout width of the simulated transistor **100** is the ridge width W plus 20 nm), a thickness for gate dielectric **140** equivalent to 1.2 nm of SiO_2, an undoped channel, a

heavily p-type doped (2×10^{19} cm^{-3} boron) pulse doped region starting precisely at the end of the gate overlap (i.e., at a distance HG below the surface of ridge **191**), no stress-based mobility enhancement, and singly doped source/drain regions.

TABLE 1

No.	Description	W (nm)	LG (nm)	HG (nm)	Ion (mA/μm)	Ioff (nA/μm)
1	Slightly Recessed	20	20	5	0.5	3×10^{-6}
2	Moderately Recessed	20	20	10	0.6	0.4
3	Very Recessed	20	20	15	0.98	500
4	Longer Channel	20	40	20	0.8	8×10^{-4}
5	Wider Ridge	40	20	10	0.82	2.2
6	"FinFET"	10	20	20	1.30	17
7	ITRS High Performance	NA	20	NA	0.8	70
8	ITRS Low Standby Power	NA	20	NA	0.58	0.06

As indicated in Table 1, design number 1, which incorporates a ridge width of 20 nm, a gate length of 20 nm, and a recess distance of 5 nm (a "Slight Recess"), provides an on-state drive current I_{on} of 0.5 mA/μm and an off-state source-to-drain leakage current I_{off} of 3×10^{-6} nA/μm. Note that I_{on} and I_{off} are listed in terms of current per micron layout width (in the direction transverse to the direction of current flow) to normalize the current values. Thus, by implementing transistor **100** with just a slight wrapping of gate **150** around ridge **191**, a very low off-state leakage current is achieved, but the on-state drive current is somewhat low. Increasing the recess distance HG to 10 nm in design number 2 provides an increase in I_{on} to 0.6 mA/μm, at the trade-off of increasing I_{off} to 0.4 nA/μm. Further increasing recess distance HG to 15 nm in design number 3 provides a significant jump in I_{on} to 0.98 mA/μm, but increases I_{off} to 500 nA/μm. Thus, implementing transistor **100** using values similar to design number 3 would generally be best for high performance circuits, whereas implementing transistor **100** using values similar to design number 1 would be best for ultra-low power circuits.

As indicated by the performance values provided for design numbers 1–3, transistor **100** allows the relationship between on-current I_{on} and off-current I_{off} to be adjusted via recess distance HG, i.e. the depth of the sub-surface heavily doped region **191**P. In contrast, the I_{on}/I_{off} relationship in conventional transistors is typically modified by adjusting the doping concentration within the channel region to achieve a particular threshold voltage. Because dimensional control (i.e., control over recess distance HG and the location of sub-surface heavily doped region **191**P) can be more precise than dopant concentration control (i.e., control over the number of dopant atoms in the channel region), transistor **100** can significantly ease the difficulties associated with achieving a particular combination of on-current I_{on} and off-current I_{off}.

Adjusting other parameters of transistor **100**, such as increasing gate length (design number 4, "Longer Channel") or increasing ridge width (design number 5, "Wider Ridge") can provide additional adjustment control over on-current I_{on}, and off-current I_{off}. Design 6 ("FinFET") approximates a vertical transistor design that has been developed in an effort to overcome the aforementioned limitations of conventional MOSFET transistors. A FinFET incorporates a high aspect ratio structure (fin) extending above the substrate surface that forms the channel region for the transistor. A gate is formed transverse to the fin and down both sides of the fin, thereby providing a "double gate" type of structure (i.e., the gate electrode induces an electric field from both sides of the fin in the channel region). As indicated by the values for design number 6, a FinFET can achieve high on-current I_{on} and a relatively low off-current I_{off}. However, the high aspect ratio fin coupled with a deep recess distance (essentially the full height of the fin channel region) can make the FinFET substantially more difficult to manufacture than transistor **100** (which can be formed using standard manufacturing processes as described in greater detail below).

Transistor **100** therefore provides a highly manufacturable structural design that still allows a great deal of performance enhancement and power savings capabilities. Note that the raised construction of ridges **191** can also beneficially minimize stress induced within the channel region of transistor **100** by the insulation material surrounding the device. Material stress can significantly affect the performance of a transistor (both negatively and positively). Therefore, it is desirable to be able to accurately define the stress within the channel region of a transistor. Due to the raised nature of ridges **191**, any undesirable stress at the base of ridges **191** will typically be significantly reduced within the top portions of ridges **191** wherein the active region of transistor **100** resides (i.e., from the tips of ridges **191** down to a distance HG). Furthermore, stress within transistor **100** is reduced even more by the fact that ridges **191** are formed on elevated base region **195** that further removes channel region **120** from the regions of highest stress (where device isolation material **193** meets elevated base region **195**). Therefore, the elevated, ridged construction of transistor **100** can significantly reduce undesirable stress within transistor **100** (versus conventional transistor designs). In general, beneficial stress relief from and adequate electrical isolation by device isolation material **193** can be provided when the depth of device isolation material **193** below the base of ridges **191** is at least equal to the height of ridges **191** (i.e., elevated base height HB is greater than or equal to ridge height HR). However, optimal stress/electrical isolation may be provided by significantly higher base height/ridge height ratios (e.g., base height HB is equal to 5× ridge height HR). Note also that since ridges **191** can be defined and manufactured with a high degree of precision (as described in greater detail below), beneficial stress within each ridge **191** can be accurately induced (e.g., by forming ridges **191** as silicon on silicon-germanium stacks) to allow transistor **100** to achieve a desired performance simply by incorporating an appropriate number of ridges **191**.

Note further that almost any enhancements available to conventional MOSFET designs can be applied to transistor **100**. For example, in one embodiment, the gate of transistor **100** may simply be flush with the top surfaces of ridges **191** (i.e., distance HG shown in FIG. **1**B is zero). FIG. **1**G shows an alternative cross-sectional view of transistor **100** (labeled as transistor **100-3** for clarity) through view location A—A indicated in FIG. **1**A. The cross-sectional view of transistor **100-3** is substantially similar to the cross-sectional view of transistor **100** shown in FIG. **1**B, except that in transistor **100-3**, ridge isolation material **192-3** extends all the way up the sides of ridges **191**, and gate **150-3** (and gate dielectrics **140-3**) does not wrap around the top portions of ridges **191**. The sub-surface heavy doping provided by the heavily-doped region **191**P begins at some depth below the top surface of ridges **191**, and can extend to any depth, though it is preferable for the heavily-doped region **191**P to not

extend past the depth of source **110** and drain **130** in order to minimize junction capacitance and junction leakage current.

In another embodiment, the segmented channel construction of transistor **100** can be incorporated into a device formed on an SOI substrate. FIG. **1**H shows another alternative cross-sectional view of transistor **100** (labeled as transistor **100-4** for clarity) through view location A—A indicated in FIG. **1**A. Transistor **100-4** includes ridges **191-4** formed on the insulator layer **192-4** of an SOI substrate **195-4**. Gate dielectrics **140-4** are formed over each of ridges **191-4**, over which gate **150-4** is formed. Note that transistor **100-4** does not require the ridge isolation material **192** shown in FIG. **1**B, because insulator layer **192-4** provides the same electrical isolation. Note further that depending on the height of ridges **191-4**, pulse-shaped doping may or may not be necessary to reduce source-to-drain leakage for transistor **100-4**, due to the channel-bounding effect of insulator layer **192-4**.

Ridges **191** in transistor **100** ideally exhibit a high degree of regularity and consistency to allow optimal functioning of transistor **100**. In other words, each of ridges **191** should ideally be dimensionally consistent with every other ridge **191**. Furthermore, ridges **191** should be relatively narrow and relatively tightly spaced to allow for maximum flexibility in transistor design and layout efficiency in an IC. For example, it may be desirable to set ridge width W_R and ridge spacing SP each to the minimum gate length (e.g., 35 nm) for transistors in the IC. However, conventional lithographic methods used in semiconductor manufacturing are not able to easily provide such fine-pitched features. Specifically, the optical lithography methods used to define structures in modern semiconductor manufacturing processes use an exposure wavelength of 193 nm, and such methods can only directly produce structures down to ~45 nm in lateral dimension through the use of various optical techniques that attempt to compensate for the lack of actual exposure resolution. For example, techniques such as optical proximity correction (OPC) and phase shift masking (PSM) make use of modified masks that make use of diffraction and interference effects to form pattern features that are smaller than the wavelength of the exposure light.

Advantageously, by forming transistor **100** on a set of pre-existing ridges **191**, many of the limitations associated with conventional lithographic methods used in semiconductor manufacturing can be overcome. For example, FIG. **2**A shows an exemplary corrugated substrate **190** that includes a set of ridges **191**. Each of ridges **191** has a height HR, a width W, and a spacing between ridges SP. Because ridges **191** are made prior to any specific device patterning, various processing techniques can be used to generate ridges **191** with a high degree of accuracy and regularity. For example, imprint lithography is a technique in which a master stencil is precisely patterned using electron-beam lithography. The master stencil is then used to pattern wafers (e.g., by imprinting a resist pattern onto a wafer), thereby enabling the formation of precise, sub-wavelength features on those wafers. Due to the complexity of most IC layouts, imprint lithography is generally not practical for use on production wafers. However, the technique is ideal for creating regular, repeating patterns on a wafer, such as ridges **191**. The use of imprint lithography can allow ridges **191** to be created with extremely precise and regular dimensions, thereby avoiding the inherent inaccuracies associated with optical lithography. Other techniques for forming ridges **191** (such as spacer lithography described in Y.-K. Choi et al., "A spacer patterning technology for nanoscale CMOS," IEEE Transactions on Electron Devices, Vol. 49, No. 3, pp. 436–441, 2002, in which vertical thin films are created along the sidewalls of sacrificial features, which are subsequently etched away) will be readily apparent.

Note that while ridges **191** are described as being formed from the same material as the underlying bulk substrate (i.e., the non-ridged portion of corrugated substrate **190**) for exemplary purposes, according to various other embodiments of the invention, ridges **191** can comprise another semiconductor material or materials. For example, each ridge **191** could include a silicon layer formed over a silicon-germanium alloy layer. Alternatively, each ridge **191** could include a semiconductor layer formed over an insulator layer. Furthermore, according to various other embodiments, ridges **191** can include any type of semiconductor material (e.g., compound semiconductors or carbon nanotubes).

To prepare a corrugated substrate **190** for semiconductor device fabrication, a ridge isolation material **192** is formed around and between semiconductor ridges **191**, as shown in FIG. **2**B. A planarization operation may be used to ensure that the top surface of ridge isolation material **192** is aligned with the tips of ridges **191**. Note that if corrugated substrate is an SOI substrate (e.g., with ridges **191** formed on an insulation layer), or if ridges **191** themselves include an insulating layer, ridge isolation material **192** can be eliminated.

An active region **102** (indicated by the dotted line) is then defined to specify the location for the final transistor(s). Just as in processes used to form conventional ICs, the areas in which the semiconductor devices (i.e., transistors, resistors, and/or capacitors) and/or local interconnects formed in semiconductor material are to be formed can be masked (typically by a lithographic operation). Note that while active region **102** is depicted as spanning four ridges **191** for exemplary purposes, in various other embodiments active region **191** can cover any number of ridges **191**, depending on the desired characteristics of the final transistor(s) **100**. For example, active region **102** could span a single ridge **191**, thereby allowing formation of the final transistor **100** as a FinFET.

Once active region **102** is defined, ridges **191** and ridge isolation material **192** can be selectively removed in the "field" areas surrounding the active areas (typically by one or more etch operations), as shown in FIG. **2**C. This etch operation(s) may reduce the field areas of substrate **190** to a depth greater than the ridge height HR, and it may also partially or completely remove the ridge isolation material **192** in the field regions. Note that elevated base region **195** can be formed by allowing the etch operation(s) to remove material from substrate **190** below the base of ridges **191** in the field regions. Note further that if a single etch is used, the subsequently formed surface **190**-S of substrate **190** may exhibit a slightly irregular profile, due to the typically different etch rates of ridge isolation material **192** (e.g., silicon oxide) and ridges **191**/substrate **190** (e.g., silicon).

After the active region formation step of FIG. **2**C, the field regions are filled with device isolation material **193**, as shown in FIG. **2**D. Just as described above with respect to the formation of ridge isolation material **192**, a planarization operation can be performed to ensure that the top surface of device isolation material **193** is aligned with the top surfaces of ridges **191**. Note that the depth of device isolation material **193** is determined by the depth to which the active region definition operation reduces substrate **190** (i.e., distance HB below the base of ridges **191**). In one embodiment, device isolation material **193** can be selected to have an etch

rate similar to that of ridge isolation material **192**, thereby allowing uniform (subsequent) selective etching to expose the tips of ridges **191**, as described in greater detail below. Note that if corrugated substrate is an SOI substrate (e.g., with ridges **191** formed on an insulation layer), or if ridges **191** themselves include an insulating layer, device insulation material **193** can be eliminated.

Note further that in one embodiment, ridges **191** may be selectively etched, and the resulting channels defined by the remaining ridge isolation material **192** and device isolation material **193** can be filled with one or more layers of semiconductor material (e.g., silicon, germanium, or silicon-germanium alloy), thereby creating precisely vertically engineered semiconductor ridges. Because the defect density of epitaxially grown semiconductor films is dramatically reduced by spatial confinement, this "etch-refill" approach can provide significant benefit for manufacturing heterostructure semiconductor channel films with low defect density (i.e. high yield). In one embodiment, the layering of semiconductor materials having different lattice constants can provide beneficial stress within ridges **191** to improve final device performance.

Next, in FIG. **2**E, ridge isolation material **192** and field insulation material **193** may optionally be selectively etched a distance HG below the top surfaces of ridges **191**. The exposed tips of ridges **191** are then covered with gate dielectric layer(s) **140**, as shown in FIG. **2**F, and a gate **150** is formed over the desired channel region for transistor **100**, as shown in FIG. **2**G.

Note that in some embodiments, ridge isolation material **192** and device isolation material **193** may be selectively etched in the channel region below the top surfaces of ridges **191** to expose the top or sidewalls of one or more buried layers within the ridges, and the one or more buried layers within the ridges may then be selectively removed in this region so that one or more remaining semiconductor layers within the ridges form bridge(s) in the channel region. Then the exposed surfaces of the semiconductor layers are covered with gate dielectric **140** and gate **150**, which as a result wrap around the semiconductor bridges (which also reforms the portions of ridges **191** removed during the selective etch process), as described in "Silicon-on-Insulator 'Gate-All-Around Device'", by J. P. Colinge et al., *International Electron Devices Meeting Technical Digest*, pp. 595–598, 1990 and also in "A Novel Sub-50 nm Multi-Bridge-Channel MOSFET (MBCFET) with Extremely High Performance," by S.-Y. Lee et al., *Symposium on VLSI Technology Digest of Technical Papers*, pp. 200–201, 2004. Note that if corrugated substrate is an SOI substrate (e.g., with ridges **191** formed on an insulation layer), or if ridges **191** themselves include an insulating layer, then the initial isolation material etch is not necessary.

At this point, an optional light doping operation (e.g., a low-dose ion implantation operation) can be performed on the exposed tips of ridges **191** to form a lightly doped source (i.e., **110**-L in FIG. **1**C) and a lightly doped drain (i.e., **130**-L in FIG. **1**C) for transistor **100**. Sidewall spacers **161** and **162** may then be formed on either side of gate **150**, as shown in FIG. **2**H, after which a heavier doping operation may be performed to form the deeper source (**110** in FIG. **1**C) and drain (**130** in FIG. **1**C) regions for transistor **100**. The exposed portions of gate dielectric layer(s) **140** (i.e., the portions of gate dielectric layer(s) **140** that are not covered by gate **150**) may then be removed as shown in FIG. **2**I.

Then, to simplify subsequent source and drain contact formation, the spaces between the exposed portions of ridges **191** can optionally be filled with semiconductor material (which can either be the same material from which ridges **191** are formed or one or more different semiconductor materials), as shown in FIG. **2**J. Note that sidewall spacers **161** and **162** can help to isolate gate **150** from the fill material deposited or grown in FIG. **2**J. Note that this fill operation may involve filling just the spaces between ridges **191**, forming a blanket layer of semiconductor material over ridges **191**, "growing" additional material on ridges **191**, or any combination of the above. The semiconductor material may be doped in-situ during the deposition/growth process, or it may be doped with a separate doping operation (e.g., a high-dose ion implantation operation). Note that any desired well and/or channel doping (e.g., pulse-shaped doping, halo doping, or pocket doping, among others) process steps could be performed any time up to this point. Note further that as described with respect to FIG. **1**C, any source/drain extensions (and/or source/drain regions) may be transformed into a metal-semiconductor compound (e.g., silicide, germanide, or germanosilicide, among others), either before or after the fill operation.

Note further that the physical characteristics of source **110** and drain **130** can vary depending on the process used to create the fill material around ridges **191**. For example, the fill material (as described with respect to the formation of source **110** and drain **130** in FIG. **2**J) may be formed using epitaxial growth, thereby causing source **110** and drain **130** to exhibit a very homogeneous structure. Alternatively, conformal deposition may be used such that source **110** and drain **130** exhibit a "striped" structure, with ridges **191** alternating with the new fill material. In such a circumstance, source **110** and drain **130** can include discrete structures that are continuous with ridges **191** in the channel region.

Note also that in one embodiment, the exposed portions of ridges **191** can be etched prior to epitaxial growth of the filler material. By then growing an appropriate semiconductor material over the reduced-height (or completely eliminated, if the etch removes material down to elevated base region **195** shown in FIGS. **1**B–**1**D or below) portions of ridges **191**, a desired stress can be induced in the portions of ridges **191** beneath gate **150** (i.e., in the channel region of transistor **100**).

For example, by etching the exposed portions of ridges **191** and then growing silicon-germanium alloy ($Si_{1-x}Ge_x$) in the source/drain contact regions, compressive uniaxial stress can be induced in the channel region to enhance the mobility of holes, thereby providing enhanced p-channel MOSFET performance. On the other hand, growing silicon-carbon alloy (Si_xc_{1-x}), rather than silicon-germanium, would induce tensile uniaxial stress in the channel region to enhance the mobility of electrons, thereby providing enhanced n-channel MOSFET performance. As noted above, the confinement of epitaxial growth to small-dimensioned regions (such as source **110** and drain **130** in FIG. **2**J) helps to reduce the defect density in the epitaxially grown material, which allows maximum stress levels to be achieved. This in turn enables the generation of consistent stress levels from transistor to transistor, thereby enhancing the uniformity of transistor performance across an IC.

Note that in another embodiment, a portion of the ridges underneath the gate may be selectively removed and optionally refilled (e.g. with an insulating material), prior to epitaxial growth of the filler material, in a manner similar to that described in "Silicon-on-Nothing (SON)—an Innovative Process for Advanced CMOS", by M. Jurczak et al., *IEEE Transactions on Electron Devices*, Vol. 47, No. 11, pp. 2179–2187, November 2000. Note that in another embodi-

ment, the etched portions of ridges **191** (on either side of gate **150**) can each be covered with a blanket layer of semiconductor material (different than the ridge material) to define the regions for source **110** and drain **130**.

In any case, to complete transistor **100**, source contact region **171** and drain contact region **172** are formed over source **110** and drain **130**, respectively, and directly abutting sidewall spacers **161** and **162**, respectively, as shown in FIG. **2**K. Note that while contacts can be made to the exposed ridges **191** (in which case the source contact region **171** and drain contact region **172** would simply consist of the exposed portions of ridges **191**) shown in FIG. **2**I without undue difficulty, device manufacturers generally prefer to form contacts on planar surfaces, such as depicted for source **110** and drain **130** in FIGS. **2**J and **2**K. In various embodiments, source contact region **171** and drain contact region **172** may each be comprised in part of a metal-semiconductor compound such as silicide, germanide, or germanosilicide to provide lower contact resistance. Note that according to various embodiments, additional stress engineering structures (e.g., a stressed capping layer over gate **150**, source **110**, and drain **130**) can be subsequently formed on transistor **100** (as described with respect to FIG. **1**B).

As described above with respect to FIG. **2**A, by creating ridges **191** as standalone structures prior to discrete device definition, ridges **191** can be formed with a high degree of precision (±15% tolerances and better) using techniques that would not necessarily be suitable for general IC production (e.g., imprint lithography and spacer lithography). In one embodiment, a semiconductor wafer can be fully patterned with such ridges, thereby allowing subsequent formation of transistor(s) **100** at any desired location on the wafer. For example, FIG. **3**A shows a top view of a wafer **390**-A that includes an array of ridges **391**-A running across almost the entire wafer surface. Ridges **391**-A are substantially similar to ridges **191** described previously, and have a predetermined height (HR in FIG. **2**A), width (W in FIG. **2**A), spacing (SP in FIG. **2**A), and composition (e.g., silicon, silicon-germanium, silicon on silicon-germanium, or carbon nanotubes, among others). By forming ridges at the wafer level, IC production costs are minimally impacted, since this type of simple bulk patterning is much less complex (and therefore much less expensive) than the localized feature formation performed during subsequent IC processing. Note that in one embodiment, wafer **391**-A can include ridge isolation material (e.g., ridge isolation material **192** shown in FIG. **2**B) between ridges **391**-A.

Note further that in various other embodiments, a corrugated substrate can include localized groupings of parallel ridges, rather than the continuous ridges **391**-A that span the entire wafer surface as shown in FIG. **3**A. For example, FIG. **3**B shows another embodiment of a corrugated substrate **390**-B that includes localized ridge sets **395**. Each localized ridge set includes ridges **391**-B that exhibit the same dimensional and physical consistency as described with respect to ridges **391**-A shown in FIG. **3**A, but are discontinuous across scribe lines **399**, which can simplify subsequent IC formation and wafer dicing operations. Therefore, each die location on corrugated substrate **390**-B (i.e., each location where an IC is to be formed) includes a separate ridge set **395**. As described with respect to FIG. **3**A, ridge sets **395** can also include ridge isolation material between ridges **391**-B. Note that in some embodiments, within each ridge set **395**, localized groupings of ridges **391**-B may exhibit different material compositions (as described in greater detail below with respect to FIG. **4**A).

Note further that while ridges **391**-B are all shown running in the same direction for exemplary purposes, according to various other embodiments, a corrugated substrate can include multiple localized ridge sets, wherein the ridges in different sets run in different directions. For example, FIG. **3**C shows a top view of an alternative localized ridge set **395**-C that could be implemented in place of localized ridge sets **395** in FIG. **3**B. Localized ridge set **395**-C includes a ridge set including parallel ridges **391**-C**1**, a ridge set including parallel ridges **391**-C**2**, a ridge set including parallel ridges **391**-C**3**, and a ridge set including parallel ridges **391**-C**4**. As described with respect to FIG. **3**B, optional ridge isolation material can separate the ridges in each of the ridge sets. Parallel ridges **391**-C**1** and **391**-C**4** run perpendicular to parallel ridges **391**-C**2** and **391**-C**3**. Any other arrangement of ridges can provide the benefits described above, so long as the ridges in any particular set of parallel ridges are longer than the critical dimension (i.e., the minimum geometry) of the devices being formed using the ridges. Note, however, that the ridges themselves may actually be thinner than the critical dimension (since the ridges can be manufactured using techniques other than those ordinarily used in actual device production, as described above). Note further that while the areas occupied by parallel ridges **391**-C**1**, **391**-C**2**, **391**-C**3**, and **391**-C**4** are depicted as being roughly equal for exemplary purposes, the different ridge groupings within a die location (i.e., between scribe lines) can exhibit any desired sizing relationship with one another.

Note further that a corrugated substrate can include large planar semiconductor surface regions. For example, FIG. **3**D shows a top view of an alternative localized ridge set **395**-D that could be implemented in place of localized ridge sets **395** in FIG. **3**B. Localized ridge set **395**-D includes a ridge set including parallel ridges **391**-D**1** (separated by optional ridge isolation material), a ridge set including parallel ridges **391**-D**2** (separated by optional ridge isolation material), and planar (unridged) semiconductor surface regions **391**-F**1** and **391**-F**2**. Conventional planar semiconductor devices (i.e., transistors, resistors, and/or capacitors) can be formed in these planar semiconductor surface regions **391**-F**1** and **391**-F**2** simultaneously with corrugated-semiconductor devices, e.g. by using the fabrication process flow described above. Note that while planar semiconductor surface regions **391**-F**1** and **391**-F**2** are depicted as covering roughly the same area as parallel ridges **391**-D**1** and **391**-D**2** for exemplary purposes, groupings of parallel ridges and planar regions can exhibit any relative sizing. Note further that a portion of a corrugated substrate can be considered a planar region so long as that portion provides an unridged area that is at least as wide as two ridges plus the spacing between those two ridges.

Ideally, a corrugated substrate will include sets of parallel ridges that cover an area at least as large as a basic functional block (e.g., a set of devices that performs a particular logic function). A corrugated substrate providing ridge sets sized in this manner can beneficially minimize the need for additional interconnect wiring between devices within functional blocks. Larger ridge sets can likewise minimize interconnect wiring requirements between functional blocks.

For example, FIG. **4**A shows a corrugated substrate **490** that includes a set of parallel ridges **491**, optionally supplied with ridge isolation material **492** present between ridges **491** (alternatively, a dielectric formation operation can be performed to form ridge isolation material **492**, in a manner substantially similar to that described with respect to FIG.

2B). Ridges **491** are substantially similar to ridges **191** described previously, and have a predetermined height (HR in FIG. **2**A), width (WR in FIG. **2**A), spacing (SP in FIG. **2**A), and composition (e.g., silicon, silicon germanium, silicon on silicon-germanium, or carbon nanotubes, among others). Active regions **401** (indicated by the dotted lines) represent locations where functional elements of a circuit are to be formed.

Note that while ridges **491** are dimensionally very similar, the composition of ridges **491** can vary. For example, a ridge group **491**A could include a top silicon layer (e.g. a silicon ridge) providing (**110**) surface crystalline orientation, and a ridge group **491**B could include a top silicon layer (e.g., an SOI ridge) providing (**001**) surface crystalline orientation. Then, if active regions **401-1** and **401-2** represent regions in which PMOS devices are to be formed, the ridges **491** in ridge group **491**A provide a surface crystalline orientation optimized for PMOS performance. Similarly, if active regions **401-3** and **401-4** represent regions in which NMOS devices are to be formed, the ridges **491** in ridge group **491**B provide a surface crystalline orientation optimized for NMOS performance.

To begin the manufacturing process, the portions of ridges **491** (and all or part of ridge isolation material **492**) that lie outside of the active regions **401** are removed (e.g., the portions of ridges **491** and insulation material **492** within active regions **401** could be masked, and the unmasked portions of ridges **491** and ridge isolation material **492** could then be etched away, as described with respect to FIG. **2**C). Non-ridge portions of substrate **490** are then filled with device insulation material **493** (e.g., shallow trench isolation), as shown in FIG. **4**B (e.g., as described with respect to FIG. **2**D), and ridge isolation material **492** and device isolation material **493** can optionally be etched to expose the top portions of the remaining ridges **491** (e.g., as described with respect to FIG. **2**E). The exposed portions of ridges **491** are then covered with gate dielectric layer(s) **440** (as described with respect to FIG. **2**F).

Next, in FIG. **4**C, gates **450** are formed over desired transistor channel locations, as described with respect to FIG. **2**G. At this point, an optional doping operation (e.g., ion implantation operation) can be performed to create source/drain extensions (e.g., **110**-L and **130**-L in FIG. **1**C) within the ridges in the regions not covered by gates **450**. Sidewall spacers (not shown for clarity) may then be formed along the sidewalls of gates **450** (e.g., as described with respect to FIG. **2**H), after which a heavier doping operation can be performed to form deeper source and drain regions (e.g., **110** and **130** in FIG. **1**C). The portions of gate dielectric layers **440** that are not covered by gates **450** may then be removed (e.g., etched selectively off of ridges **491**, as described with respect to FIG. **2**I)). The exposed portions of ridges **491** can be filled-in with semiconductor material to form large source-drain contact regions **415** and semiconductor interconnects **416**, as shown in FIG. **4**D (e.g., as described with respect to FIG. **2**J). The source-drain contact regions **415** can be doped in-situ during the deposition/growth of the semiconductor material, or they may be doped with a separate doping operation (e.g., a high-dose ion implantation operation), to complete the transistors in the circuit (e.g., transistors **400-1** and **400-2**). In addition, any desired well and/or channel doping (e.g., pulse-shaped doping) could be performed on ridges **491** (at any time up to this point). Furthermore, any desired metal-semiconductor compound formation in source/drain extension regions (and/or source/drain regions) can be performed. For reference purposes, the portions of ridges **491** in the channel regions of the transistors are indicated by the lightly shaded rectangles in gates **450** in FIG. **4**D. A metal-semiconductor compound (e.g., silicide, germanide, or germanosilicide) may be formed in source-drain contact regions **415** (as described with respect to FIG. **2**K) to reduce contact resistance. Note that if the gate "overhang" distance HG (e.g., as shown in FIGS. **1**B and **2**E) for a given transistor(s) in FIG. **4**D is greater than the ridge width W (e.g., as shown in FIGS. **1**B and **2**A) of that transistor, then that transistor would essentially be a FinFET. In any case, to complete the IC, standard passivation, contact formation, metallization, and post-metallization annealing (PMA) can then be performed to complete circuit **408** depicted in FIG. **4**E (metallization not shown for clarity).

As noted above, the source-drain contact regions **415** consisting of "filled" ridges **491** provide reliable landing locations for contacts **405** (although contacts could also be made to the original ridges **491** themselves). Furthermore, the semiconductor interconnects **416** formed in this manner provide device-level electrical connections. Consequently, the metallization requirements for circuit **408** are reduced, which can reduce cost and provide greater interconnect routing flexibility in the metal layer(s) of circuit **408**. Note that in one embodiment, transistors formed along common ridges **191** (e.g., transistors **400-1** and **400-2**), could include unfilled ridges **191** to provide an electrical connection between the transistors.

Note further that due to the use of a corrugated substrate (**490**) in the formation of circuit **408**, the channel segments (ridges **491**) in adjacent transistors will always be closely aligned. For example, each of the eight transistors running across the bottom of circuit **408** (formed at gates **450**) includes a channel segment aligned along a centerline CL. Such an arrangement is inevitable, since each of those channel segments was originally part of a single ridge **491** (i.e., ridge **491-1** shown in FIG. **4**A). Each channel segment along centerline CL can easily exhibit dimensional consistency and alignment accuracy within 5% from segment to segment (i.e., the widths and centerlines of the channel segments will all be within 5% of the widths and centerlines, respectively, of all the other channel segments). In contrast, a circuit manufactured using a conventional (non-corrugated) substrate will not exhibit the same degree of dimensional consistency and channel alignment, due to the lack of similar alignment constraints in the design and manufacturing process, and more importantly, due to inherently irregular patterns defined by optical lithography in IC manufacturing processes.

FIG. **5** shows a flow diagram of the manufacturing process described with respect to FIGS. **2**A-**2**I and **4**A-**4**E. First, in an optional "CREATE CORRUGATED SUBSTRATE" step **505**, a corrugated substrate (e.g., **190** in FIG. **2**A, **390**-A in FIG. **3**A, **390**-B in FIG. **3**B, and **490** in FIG. **4**A) is formed using a high-precision manufacturing technique (e.g., imprint lithography or spacer lithography). Alternatively, a pre-made corrugated substrate can be used. Step **505** can also include a ridge isolation material formation operation (e.g., if isolation material is not included in the pre-made corrugated substrate).

Then, the active regions for the circuit (i.e., regions in which devices and optionally semiconductor interconnects are to be formed) are defined in a "DEFINE ACTIVE REGIONS" step **510** (as described with respect to FIGS. **2**B and **4**A). The ridges (and all or part of the ridge isolation material) outside of the active regions are then removed (e.g., etched away) in a "REMOVE UNUSED RIDGES" step **515** (as described with respect to FIGS. **2**C and **4**B), and

device isolation material (e.g., device isolation material **493** in FIG. **4**B) can be formed in the cleared field regions of the wafer in an optional "INSULATION FILL" step **520** (as described with respect to FIG. **2**D). In one embodiment, the insulation layer can be formed over the ridges, and can subsequently be planarized down to the surface level of the ridges.

Top portions of the ridge isolation material and the device isolation material can then be removed in an optional "RECESS INSULATION" step **525** to expose top portions of the ridges (as described with respect to FIGS. **2**E and **4**B). Optional well/channel doping (e.g., pulse-shaped doping) can be performed at this point in a "CHANNEL/WELL DOPING" step **530**, or at any point before "METALLIZATION" step **575**. The exposed portions of the ridges can then be coated with a gate dielectric layer in a "GATE DIELECTRIC FORMATION" step **535** (as described with respect to FIGS. **2**F and **4**B), and gates can be formed over the desired portions of the coated ridges in a "GATE FORMATION" step **540** (as described with respect to FIGS. **2**G and **4**C). If desired, source/drain extensions can be formed at this point in an optional "SOURCE/DRAIN EXTENSION DOPING" step **545** (as described with respect to FIGS. **2**G and **4**C). Sidewall spacers can be formed along the sidewalls of the gates in an optional "SIDEWALL SPACER FORMATION" step **550** (as described with respect to FIGS. **2**H and **4**C). Optional halo or pocket doping can be performed at this point in an optional "HALO DOPING" step **555** (e.g., as described with respect to FIGS. **1**E and **1**F). The unused portions of the gate dielectric layers (i.e., the portions not separating the gates from the ridges) can then be removed in an optional "GATE DIELECTRIC REMOVAL" step **560** (as described with respect to FIGS. **2**I and **4**C).

The spaces between the ridges can then be filled with semiconductor material in an optional "SEMICONDUCTOR FILL" step **565** and the source and drain regions for each of the transistors (i.e., the regions not covered by a gate) can then be doped in a "SOURCE/DRAIN DOPING" step **570** (as described with respect to FIGS. **2**J and **4**D). Note that in other embodiments, the source/drain doping performed in step **570** can be performed before the semiconductor fill operation of step **565**. Note further that, as described with respect to FIGS. **2**I and **2**J, step **565** can involve etching down the ridges next to some or all of the gates and forming a different semiconductor material over the etched regions (either on individual ridges or as a blanket layer over all ridges) to induce a desired stress within the channel regions of the devices. Note further that in various embodiments, metal-semiconductor compound formation in source/drain extension regions (and/or source/drain regions) can be performed during step **570** (which can, in certain circumstances, eliminate the need for doping in the source/drain regions). Finally, any remaining operations for completing the circuit are performed in a "METALLIZATION" step **575** (e.g., source-drain contact region metal-semiconductor compound formation (e.g., silicidation, germanidation, or germanosilicidation), device passivation (including any additional stress engineering, such as forming stressed capping layers), contact formation, metallization, and PMA, as described with respect to FIGS. **2**K and **4**E).

The various embodiments of the structures and methods of this invention that are described above are illustrative only of the principles of this invention and are not intended to limit the scope of the invention to the particular embodiments described. Thus, the invention is limited only by the following claims and their equivalents.

The invention claimed is:

1. A transistor comprising:

a source;

a drain;

a channel region between the source and the drain; and

a gate over the channel region,

wherein the channel region comprises a plurality of semiconductor ridges connecting the source and the drain,

wherein the plurality of semiconductor ridges are separated in part by insulation material, and

wherein the plurality of semiconductor ridges are formed on an elevated base region on a substrate.

2. The transistor of claim **1**, wherein each of the plurality of semiconductor ridges has a ridge height above the elevated base region, and

wherein a height of the elevated base region above adjacent portions of the substrate is equal to at least the ridge height.

3. The transistor of claim **2**, wherein the height of the elevated base region above the adjacent portions of the substrate is at least five times the ridge height.

4. The transistor of claim **1**, further comprising a plurality of gate dielectrics, each of the plurality of gate dielectrics being formed over a top portion of one of the plurality of semiconductor ridges, the plurality of gate dielectrics separating the top portion of each of the plurality of semiconductor ridges from the gate.

5. The transistor of claim **4**, wherein each of the plurality of gate dielectrics wraps around the top portion of one of the plurality of semiconductor ridges, and

wherein the gate wraps around the top portion of each of the plurality of semiconductor ridges over the plurality of gate dielectrics.

6. The transistor of claim **1**, wherein each of the plurality of semiconductor ridges includes a subsurface heavily doped region.

7. The transistor of claim **6**, further comprising a plurality of gate dielectrics, each of the plurality of gate dielectrics being formed over a top portion of one of the plurality of semiconductor ridges, the plurality of gate dielectrics separating the top portion of each of the plurality of semiconductor ridges from the gate,

wherein each of the plurality of gate dielectrics wraps around the top portion of one of the plurality of semiconductor ridges,

wherein the gate wraps around the top portion of each of the plurality of semiconductor ridges over the plurality of gate dielectrics, and

wherein the sub-surface heavily doped region in each of the plurality of semiconductor ridges reaches no more than 50% of maximum dopant concentration within the top portion of the each of the plurality of semiconductor ridges.

8. The transistor of claim **6**, wherein the subsurface heavily doped region comprises a pulse doped region.

9. The transistor of claim **6**, wherein the subsurface heavily doped region comprises one of a halo doped region and a pocket doped region.

10. The transistor of claim **1**, wherein the source comprises a first region doped to a first depth below the top surfaces of the plurality of semiconductor ridges,

wherein the drain comprises a second region doped to a second depth below the top surfaces of the plurality of semiconductor ridges, and

wherein the insulation material reaches a third depth below the top surfaces of the plurality of semiconductor ridges, the third depth being greater than the first depth and the second depth.

11. The transistor of claim **1**, wherein the source comprises a first region doped to a first depth below the top surfaces of the plurality of semiconductor ridges,

wherein the drain comprises a second region doped to a second depth below the top surfaces of the plurality of semiconductor ridges, and

wherein the insulation material reaches a third depth below the top surfaces of the plurality of semiconductor ridges, the third depth being less than the first depth and the second depth.

12. The transistor of claim **1**, further comprising:

a first sidewall spacer; and

a second sidewall spacer, the gate being between the first sidewall spacer and the second sidewall spacer,

wherein the source comprises a first lightly doped extension under the first sidewall spacer, and

wherein the drain comprises a second lightly doped extension under the second sidewall spacer.

13. The transistor of claim **1**, wherein the source comprises a source extension adjacent to the channel region,

wherein the drain comprises a drain extension adjacent to the channel region, and

wherein the source extension and the drain extension comprise a metal-semiconductor compound.

14. The transistor of claim **1**, wherein the plurality of semiconductor ridges are formed on an insulating layer.

15. The transistor of claim **1**, wherein the source comprises a first set of discrete structures, wherein a quantity of the first set of discrete structures are continuous with the plurality of semiconductor ridges, and

wherein the drain comprises a second set of discrete structures, wherein the quantity of the second set of discrete structures are continuous with the plurality of semiconductor ridges.

16. The transistor of claim **15**, wherein the source further comprises a first semiconductor region formed over the first set of discrete structures,

wherein the drain further comprises a second semiconductor region formed over the second set of discrete structures,

wherein the first semiconductor region and the second semiconductor region comprise a first semiconductor material, and

wherein the first set of discrete structures and the second set of discrete structures comprise a second semiconductor material, the second semiconductor material being different from the first semiconductor material.

17. The transistor of claim **15**, further comprising a stressed capping layer formed over the gate, the source, and the drain for inducing stress within the plurality of semiconductor ridges.

18. A transistor comprising:

a source;

a drain;

a channel region between the source and the drain; and

a gate over the channel region,

wherein the channel region comprises a plurality of semiconductor ridges connecting the source and the drain, the plurality of semiconductor ridges being separated in part by insulation material, and

wherein each of the plurality of semiconductor ridges includes a sub-surface heavily doped channel region.

19. The transistor of claim **18**, further comprising a plurality of gate dielectrics, each of the plurality of gate dielectrics being formed over a top portion of one of the plurality of semiconductor ridges, the plurality of gate dielectrics separating the top portion of each of the plurality of semiconductor ridges from the gate.

20. The transistor of claim **18**, wherein each of the plurality of gate dielectrics wraps around the top portion of one of the plurality of semiconductor ridges, and

wherein the gate wraps around the top portion of each of the plurality of semiconductor ridges over the plurality of gate dielectrics.

21. The transistor of claim **20**, wherein the sub-surface heavily doped region in each of the plurality of semiconductor ridges reaches at least 50% of maximum dopant concentration within the top portion of the each of the plurality of semiconductor ridges.

22. The transistor of claim **21**, wherein the sub-surface heavily doped region in each of the plurality of semiconductor ridges reaches at least 50% of maximum dopant concentration at least 5 nm below the top surface of the each of the plurality of semiconductor ridges.

23. The transistor of claim **20**, wherein the sub-surface heavily doped region in each of the plurality of semiconductor ridges reaches at least 50% of maximum dopant concentration below the top portion of the each of the plurality of semiconductor ridges.

24. The transistor of claim **18**, wherein the source comprises a first region doped to a first depth below the top surfaces of the plurality of semiconductor ridges,

wherein the drain comprises a second region doped to a second depth below the top surfaces of the plurality of semiconductor ridges, and

wherein the insulation material reaches a third depth below the top surfaces of the plurality of semiconductor ridges, the third depth being greater than the first depth and the second depth.

25. The transistor of claim **18**, wherein the source comprises a first region doped to a first depth below the top surfaces of the plurality of semiconductor ridges,

wherein the drain comprises a second region doped to a second depth below the top surfaces of the plurality of semiconductor ridges, and

wherein the insulation material reaches a third depth below the top surfaces of the plurality of semiconductor ridges, the third depth being less than the first depth and the second depth.

26. The transistor of claim **18**, further comprising:

a first sidewall spacer; and

a second sidewall spacer, the gate being between the first sidewall spacer and the second sidewall spacer,

wherein the source comprises a first lightly doped extension under the first sidewall spacer, and

wherein the drain comprises a second lightly doped extension under the second sidewall spacer.

27. The transistor of claim **18**, wherein the plurality of semiconductor ridges are formed on an insulating layer.

28. The transistor of claim **18**, wherein the source comprises a first set of discrete structures, wherein a quantity of the first set of discrete structures are continuous with the plurality of semiconductor ridges, and

wherein the drain comprises a second set of discrete structures, wherein the quantity of the second set of discrete structures are continuous with the plurality of semiconductor ridges.

29. The transistor of claim **18**, further comprising a stressed capping layer over the gate, the source, and the drain for inducing a stress within the plurality of semiconductor ridges.

30. The transistor of claim **18**, further comprising a gate dielectric layer over a top surface of each of the plurality of semiconductor ridges,

wherein the sub-surface heavily doped region in each of the plurality of semiconductor ridges reaches at least 50% of maximum dopant concentration at least 5 nm below the top surface of the each of the plurality of semiconductor ridges.

* * * * *