US009147747B2

(12) **United States Patent**
Hung et al.

(10) **Patent No.: US 9,147,747 B2**
(45) **Date of Patent: Sep. 29, 2015**

(54) **SEMICONDUCTOR STRUCTURE WITH HARD MASK DISPOSED ON THE GATE STRUCTURE**

(71) Applicant: **UNITED MICROELECTRONICS CORP.**, Hsin-Chu (TW)

(72) Inventors: **Ching-Wen Hung**, Tainan (TW); **Chih-Sen Huang**, Tainan (TW)

(73) Assignee: **UNITED MICROELECTRONICS CORP.**, Science-Based Industrial Park, Hsin-Chu (TW)

(*) Notice: Subject to any disclaimer, the term of this patent is extended or adjusted under 35 U.S.C. 154(b) by 35 days.

(21) Appl. No.: **13/875,293**

(22) Filed: **May 2, 2013**

(65) **Prior Publication Data**

US 2014/0327080 A1 Nov. 6, 2014

(51) **Int. Cl.**

H01L 29/76	(2006.01)
H01L 29/66	(2006.01)
H01L 29/78	(2006.01)
H01L 29/417	(2006.01)

(52) **U.S. Cl.**

CPC ***H01L 29/66515*** (2013.01); ***H01L 29/41791*** (2013.01); ***H01L 29/665*** (2013.01); ***H01L 29/66795*** (2013.01); ***H01L 29/785*** (2013.01); ***H01L 29/7839*** (2013.01)

(58) **Field of Classification Search**

CPC H01L 29/665; H01L 21/823814; H01L 2924/0002; H01L 21/28518; H01L 21/823807

USPC 257/365, 369, E21.421, E27.062, 257/E29.264

See application file for complete search history.

(56) **References Cited**

U.S. PATENT DOCUMENTS

5,998,873	A	12/1999	Blair
6,043,138	A	3/2000	Ibok
6,492,216	B1	12/2002	Yeo
6,855,607	B2	2/2005	Achuthan
6,921,963	B2	7/2005	Krivokapic
7,013,446	B2	3/2006	Ohba
7,087,477	B2	8/2006	Fried
7,091,551	B1	8/2006	Anderson
7,112,495	B2	9/2006	Ko
7,214,620	B2	5/2007	Kim
7,247,887	B2	7/2007	King
7,250,658	B2	7/2007	Doris
7,309,626	B2	12/2007	Ieong
7,352,034	B2	4/2008	Booth, Jr.
7,470,570	B2	12/2008	Beintner
7,521,324	B2	4/2009	Ohmi
7,531,437	B2	5/2009	Brask
7,569,857	B2	8/2009	Simon
7,592,270	B2	9/2009	Teo

(Continued)

Primary Examiner — Andy Huynh
(74) *Attorney, Agent, or Firm* — Winston Hsu; Scott Margo

(57) **ABSTRACT**

The present invention provides a manufacturing method of a semiconductor structure, comprising the following steps. First, a substrate is provided, a first dielectric layer is formed on the substrate, a metal gate is disposed in the first dielectric layer and at least one source/drain region (S/D region) is disposed on two sides of the metal gate, a second dielectric layer is then formed on the first dielectric layer, a first etching process is then performed to form a plurality of first trenches in the first dielectric layer and the second dielectric layer, wherein the first trenches expose each S/D region. Afterwards, a salicide process is performed to form a salicide layer in each first trench, a second etching process is then performed to form a plurality of second trenches in the first dielectric layer and the second dielectric layer, and the second trenches expose the metal gate.

9 Claims, 5 Drawing Sheets

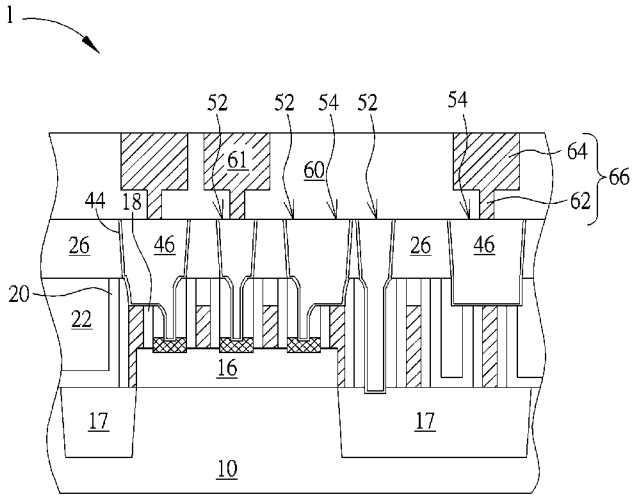

TSMC EXHIBIT 1001

(56) **References Cited**

U.S. PATENT DOCUMENTS

2004/0195624	A1	10/2004	Liu	
2005/0051825	A1	3/2005	Fujiwara	
2006/0099830	A1	5/2006	Walther	
2006/0286729	A1	12/2006	Kavalieros	
2007/0015365	A1	1/2007	Chen	
2007/0072376	A1	3/2007	Chen	
2007/0108528	A1	5/2007	Anderson	
2007/0158756	A1	7/2007	Dreeskornfeld	
2007/0218661	A1	9/2007	Shroff	
2008/0061366	A1	3/2008	Liu	
2008/0157208	A1	7/2008	Fischer	
2009/0057759	A1	3/2009	Obradovic	
2009/0124097	A1	5/2009	Cheng	
2009/0200494	A1	8/2009	Hatem	
2009/0236669	A1 *	9/2009	Chen et al.	257/380
2009/0242964	A1	10/2009	Akil	
2009/0269916	A1	10/2009	Kang	
2010/0040768	A1	2/2010	Dhindsa	
2010/0044783	A1	2/2010	Chuang	
2010/0048027	A1	2/2010	Cheng	
2010/0072553	A1	3/2010	Xu	
2010/0129994	A1	5/2010	Awad	
2010/0144121	A1	6/2010	Chang	
2010/0167506	A1	7/2010	Lin	
2012/0068234	A1	3/2012	Soss	
2012/0139061	A1	6/2012	Ramachandran	
2013/0154022	A1 *	6/2013	Chung et al.	257/369
2014/0048888	A1 *	2/2014	Chen et al.	257/369

* cited by examiner

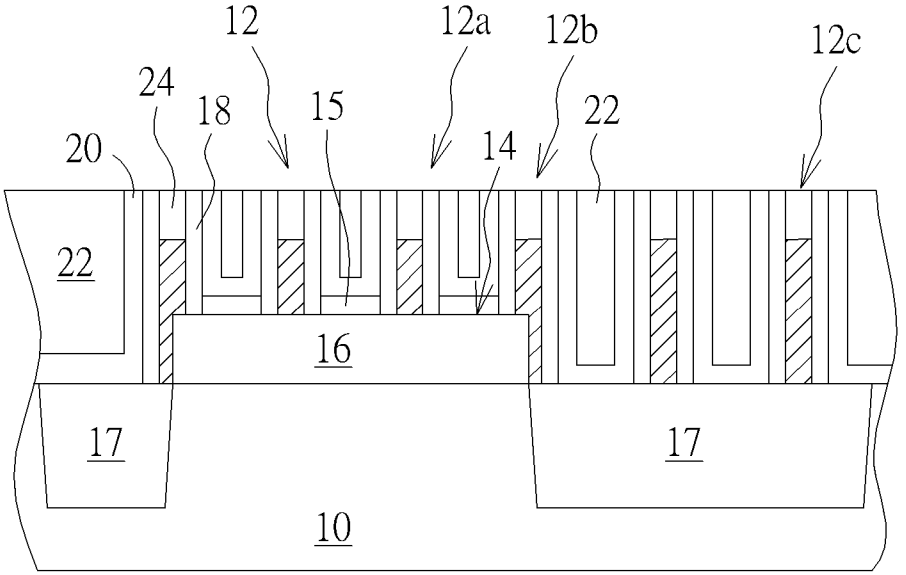
12
12a
12b
12c
24
18
15
22
20
14
22
16
17
17
10

FIG. 1

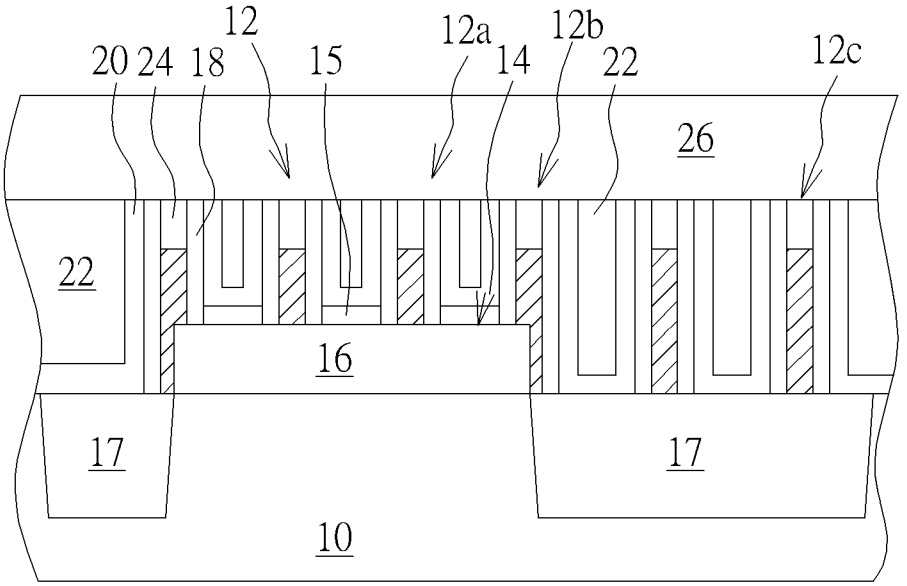
12
12a
12b
20
24
18
15
14
22
12c
26
22
16
17
17
10

FIG. 2

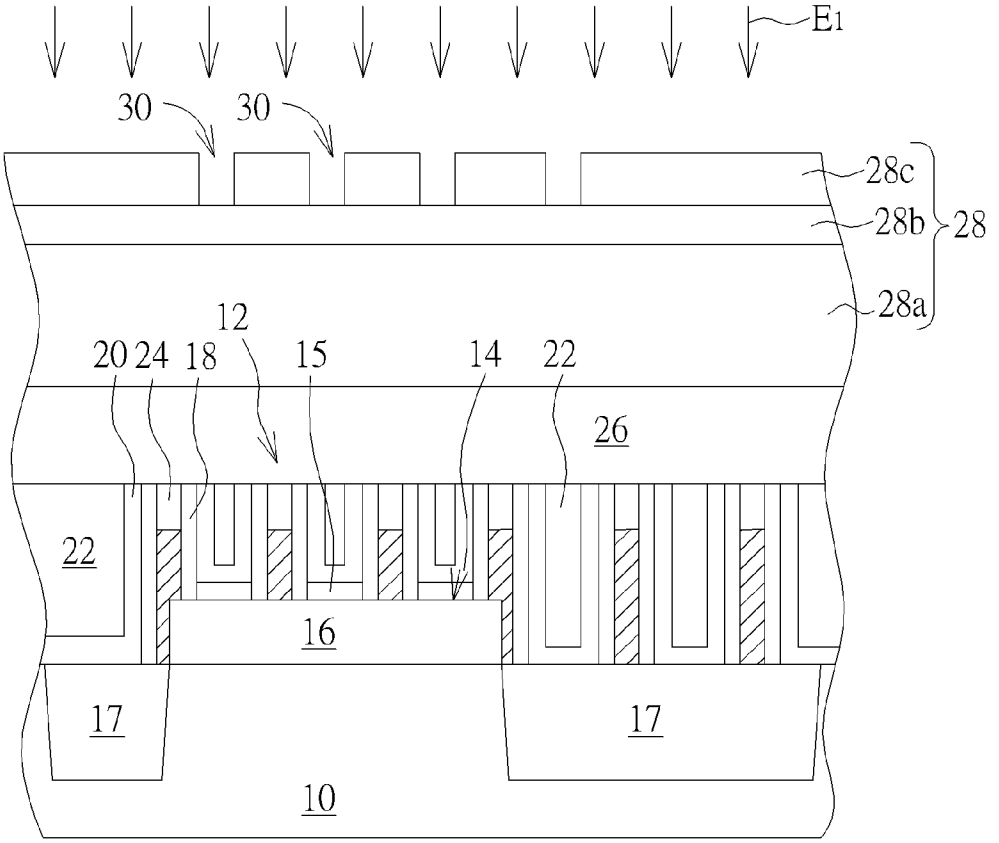
E1
30
30
28c
28b
28
28a
12
20
24
18
15
14
22
26
22
16
17
17
10

FIG. 3

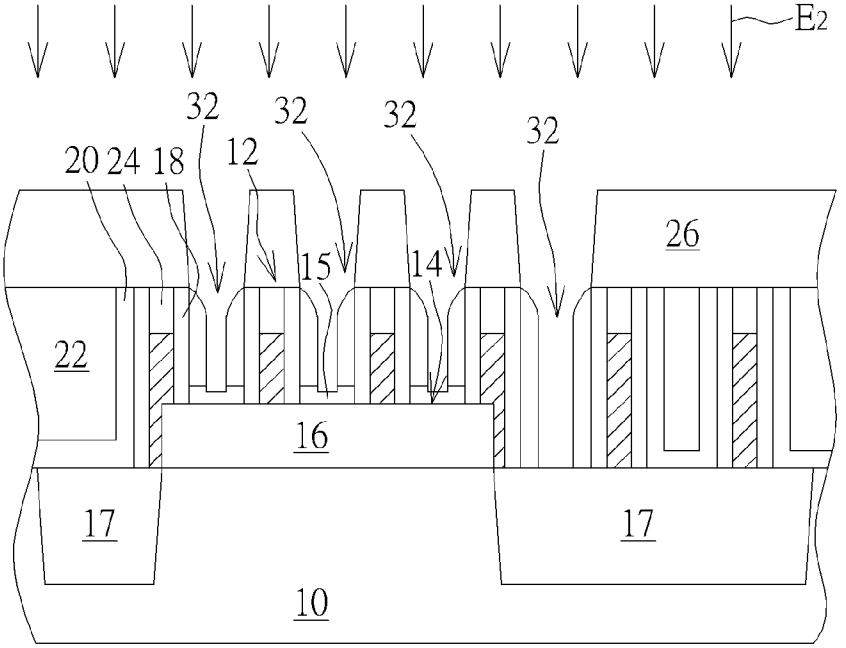
E2
32
32
32
32
20
24
18
12
26
15
14
22
16
17
17
10

FIG. 4

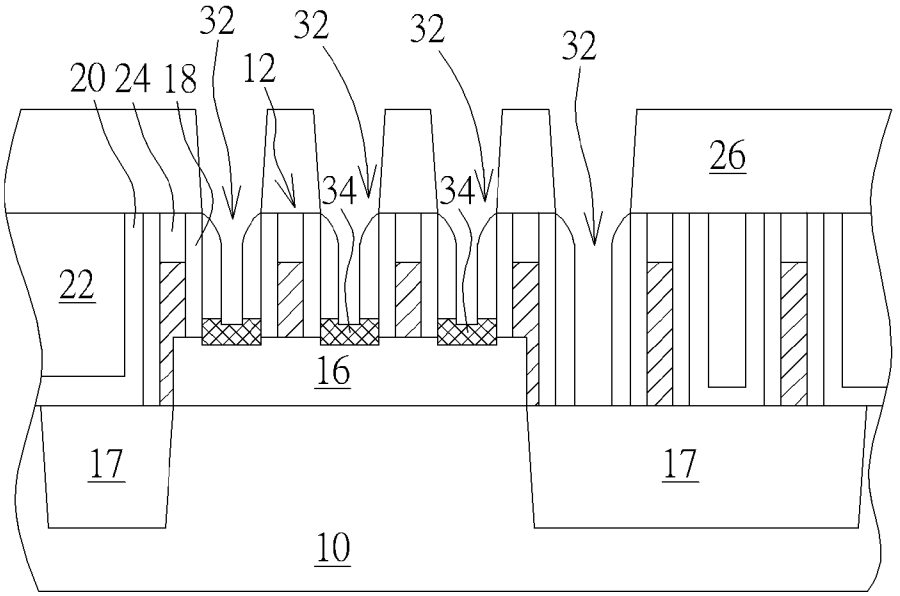
32
32
32
32
20 24 18
12
26
34
34
22
16
17
17
10

FIG. 5

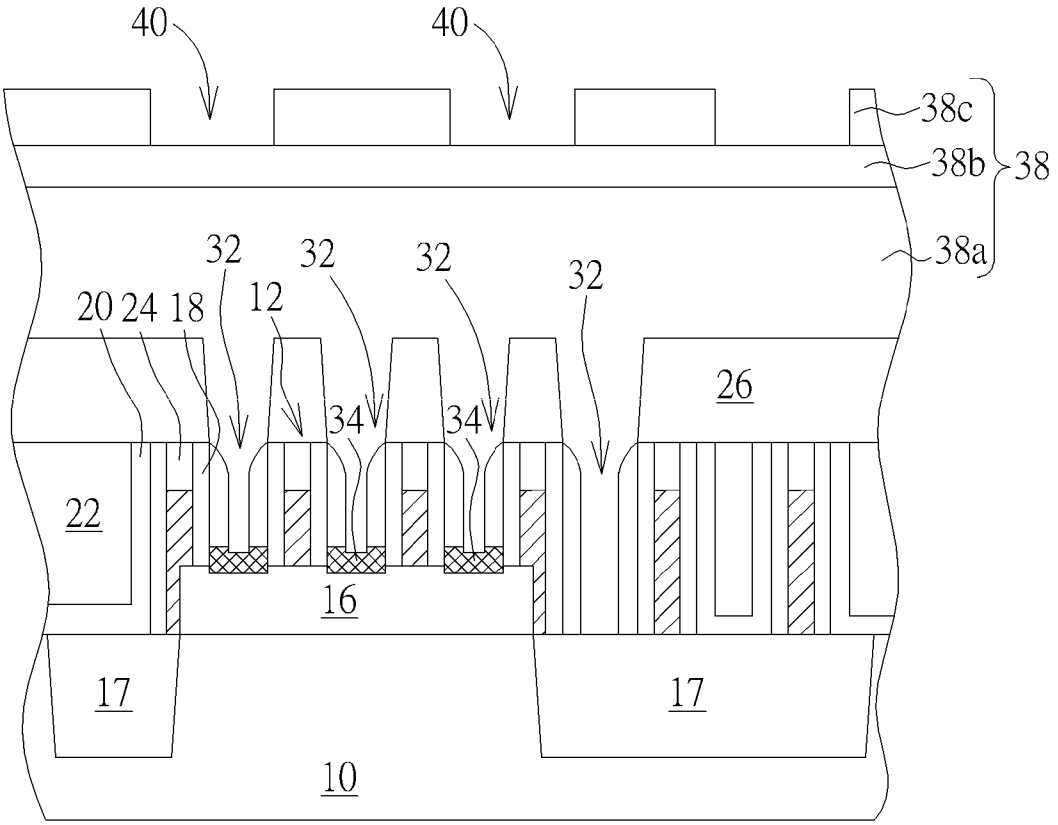
40
40
38c
38b
38
38a
32
32
32
32
20 24 18
12
26
34
34
22
16
17
17
10

FIG. 6

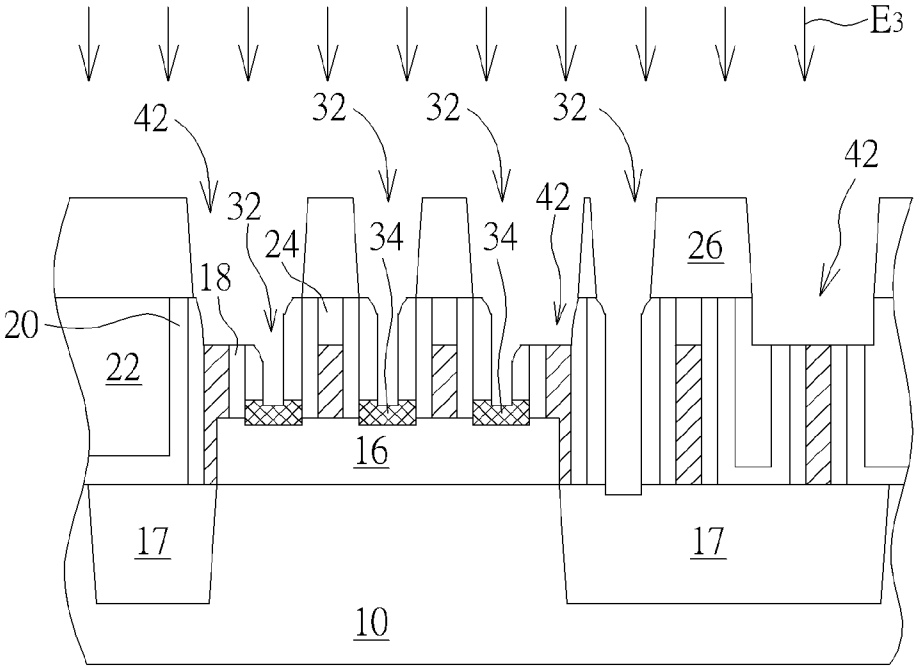
E3
42
32
32
32
42
32
24
34
34
42
26
18
20
22
16
17
17
10

FIG. 7

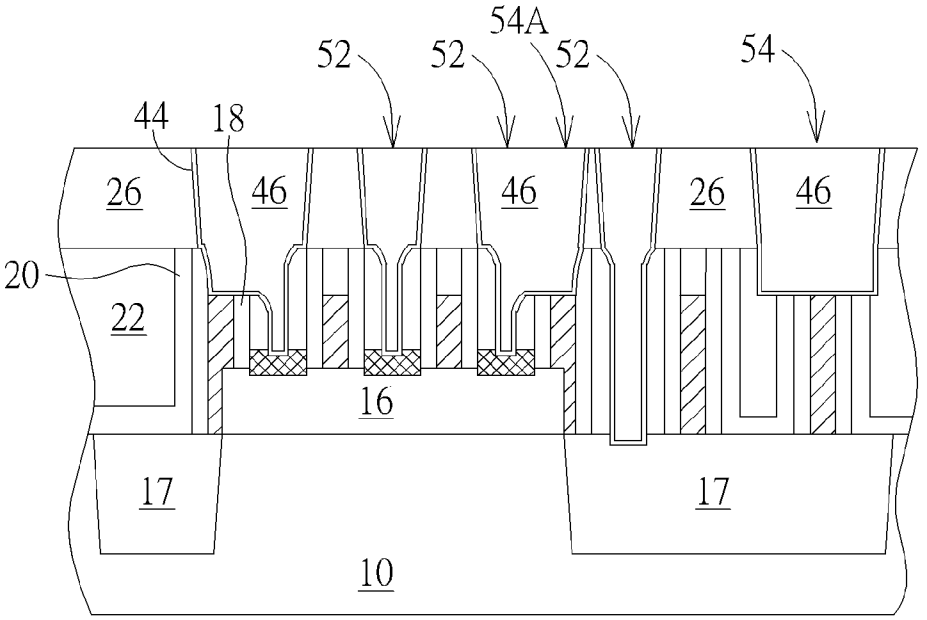
54A
52
52
52
54
44
18
26
46
46
26
46
20
22
16
17
17
10

FIG. 8

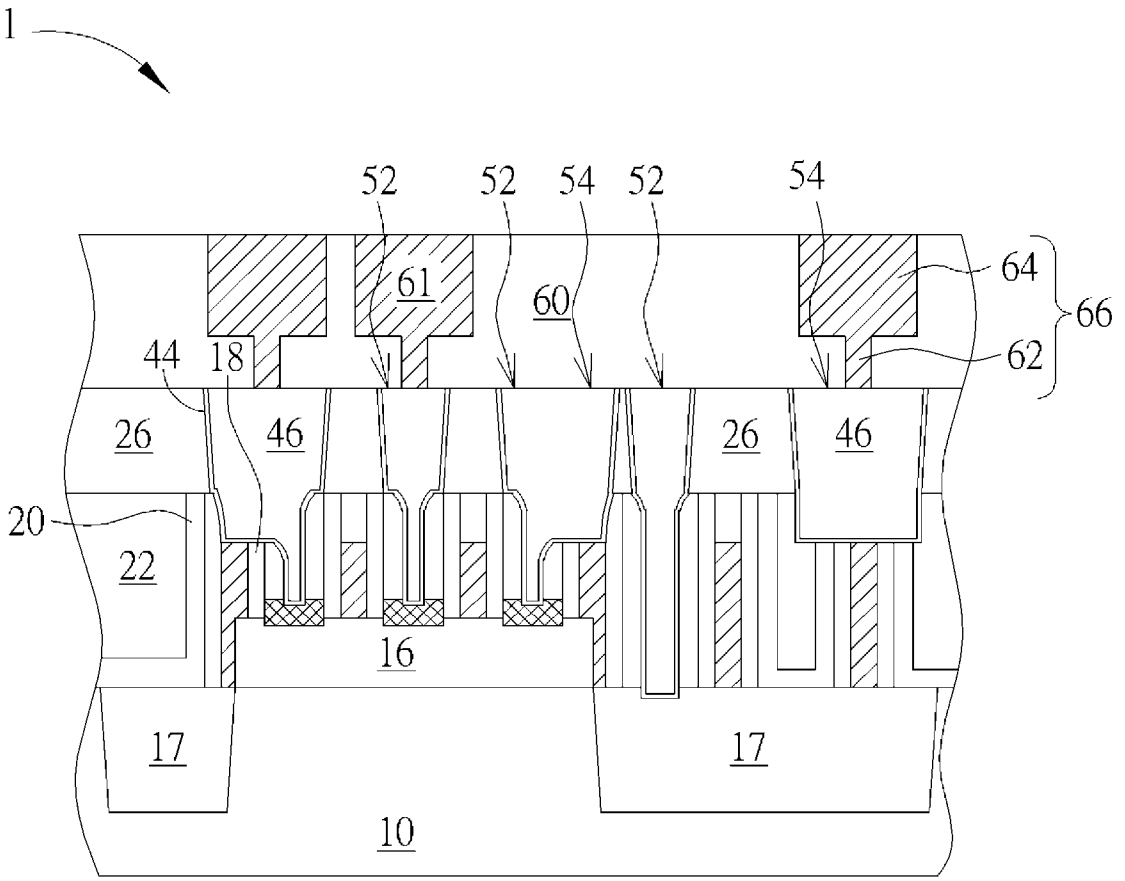

FIG. 9

SEMICONDUCTOR STRUCTURE WITH HARD MASK DISPOSED ON THE GATE STRUCTURE

BACKGROUND OF THE INVENTION

1. Field of the Invention

The present invention relates generally to semiconductor manufacturing process, and more specifically, to a method using a hard mask on the metal gate to form contacts structure simultaneously during a plurality of etching processes.

2. Description of the Prior Art

Along with the continuous miniaturization of the Integrated Circuits (IC), the line width of interconnections and the feature size of semiconductor devices have continuously shrunk. In general, discrete devices in integrated circuits are connected to each other through contact plugs (or contact slots) and interconnection structures, and their related fabrication methods have become an important matter in the next-generation semiconductor devices.

In current fabricating processes, due to the limitations of the back end of the line (BEOL) process capacity, the yield of contact plugs with high aspect ratio (HAR) is relatively low and cannot reach the new requirements. In order to overcome this drawback, a double patterning technique, generally including two photolithographic and two etching processes (2P2E) has been invented in order to fabricate required device patterns. Generally, a contact is divided into two parts, a lower contact structure and an upper contact structure (i.e. the metal level zero, M0). After the lower contact structure is formed completely, the M0 is continuously formed. The M0 can be a pole structure or a slot structure. However, since the upper contact structure (M0) and the lower contact structure are formed in different steps, a barrier layer will exist between the upper contact structure (M0) and the lower contact structure, thereby affecting the conductivity of the contact. Besides, the manufacturing process is too complex.

Accordingly, in order to overcome the above-mentioned drawbacks, there is a need to provide a modified method for fabricating interconnection structures with better yields.

SUMMARY OF THE INVENTION

To solve the issues mentioned above, the present invention provides a semiconductor device comprising a substrate, a first dielectric layer disposed on the substrate, a metal gate disposed in the first dielectric layer, a source/drain region (S/D region) disposed on two sides of the metal gate, and a hard mask disposed on the metal gate, wherein the top surface of the hard mask and the top of the first dielectric layer are on the same level.

The present invention further comprises a manufacturing method for forming the semiconductor device at least comprising the following steps: first, a substrate is provided, a first dielectric layer is formed on the substrate, a metal gate is disposed in the first dielectric layer and at least one source/drain region (S/D region) is disposed on two sides of the metal gate; a second dielectric layer is then formed on the first dielectric layer, a first etching process is then performed, to form a plurality of first trenches in the first dielectric layer and the second dielectric layer, wherein the first trenches expose each S/D region. Afterwards, a salicide process is performed to form a salicide layer in each first trench; a second etching process is then performed to form a plurality of second trenches in the first dielectric layer and the second dielectric layer, and the second trenches expose the metal gate.

The present invention further comprises a hard mask on the metal gate, and uses etching gases with different etching rates to selectively etch the hard mask and the dielectric layer disposed above. In this way, the contacts disposed correspondingly to the metal gate and the contacts disposed correspondingly to the S/D region can be formed simultaneously, and replace the 0th metal layer (M0) and the lower contact structure in a conventional process, thereby reducing the manufacturing steps.

These and other objectives of the present invention will no doubt become obvious to those of ordinary skill in the art after reading the following detailed description of the preferred embodiment that is illustrated in the various figures and drawings.

BRIEF DESCRIPTION OF THE DRAWINGS

FIGS. **1-9** are schematic diagrams illustrating a manufacturing method of the FinFET semiconductor device according to a first preferred embodiment of the present invention.

DETAILED DESCRIPTION

To provide a better understanding of the present invention to users skilled in the technology of the present invention, preferred embodiments are detailed as follows. The preferred embodiments of the present invention are illustrated in the accompanying drawings with numbered elements to clarify the contents and effects to be achieved.

Please note that the figures are only for illustration and the figures may not be to scale. The scale may be further modified according to different design considerations. When referring to the words "up" or "down" that describe the relationship between components in the text, it is well known in the art and should be clearly understood that these words refer to relative positions that can be inverted to obtain a similar structure, and these structures should therefore not be precluded from the scope of the claims in the present invention.

Please refer to FIGS. **1~9** are schematic diagrams illustrating a manufacturing method of the FinFET semiconductor device according to a first preferred embodiment of the present invention. As shown in FIG. **1**, a substrate **10** is first provided, wherein the substrate **10** comprises at least one metal gate **12** disposed on the substrate **10** and at least one source/drain region (S/D region) **14** disposed on two sides of the metal gate **12**. Besides, the substrate **10** selectively comprises at least one fin structure **16**. In this embodiment, the metal gate **12** comprises metal materials, the S/D region **14** can be formed on two sides of the metal gate **12** of the substrate **10** through an ion implantation process, or formed on the fin structure **16** disposed on two sides of the metal gate **12**. The method of the present invention further comprises forming at least one shallow trench isolation (STI) **17** in the substrate **10** surrounding the metal gate **12**, to isolate the metal gate **12** from the fin structures **16** and others electric elements on the substrate **10**. In this embodiment, the metal gate may cross the fin structure disposed on the substrate **10** (such as the metal gate **12***a* shown in FIG. **1**), or be disposed on the STI **17** (such as the metal gate **12***c* shown in FIG. **1**) and be used as a dummy gate, or may disposed on the edge of the fin structure **16** to protect the fin structure **16** (such as the metal gate **12***b* shown in FIG. **1**).

In addition, the method of the present invention further comprises selectively forming an epoxy layer **15** on the S/D region **14**. Afterwards, a spacer **18** and a contact etching stop layer (CESL) **20** may be formed on two sides of the metal gate **12**. A first dielectric layer **22** is then formed on the substrate

10, and a planarization process is then performed, such as a chemical mechanical polishing (CMP), to have the top surface of the metal gate **12** and the top surface of the first dielectric layer **22** on the same level. It is worth noting that in this embodiment, an etching process is performed after the metal gate **12** is completed, to remove parts of the metal gate **12**, and a hard mask **24** is then formed to replace the upper portion of the metal gate **12**. Another planarization process is then performed to remove the extra hard mask **24**. In other words, in the present embodiment, a hard mask **24** is disposed on the top of the metal gate **12**, and the top surface of the hard mask **24** and the top surface of the first dielectric layer **22** are on the same level. Besides, since the hard mask **24** replaces some top portion of the metal gate **12**, the hard mask **24** is therefore disposed only on the metal gate **12**, and disposed between the spacers **18**. In addition, since parts of the spacer **18** and parts of the CESL **20** are removed during another planarization process, so the spacer **18** and the CESL **20** have a truncated top surface. In the present embodiment, the spacer **18**, the CESL **20** and the hard mask **24** mainly comprise silicon nitride, and the first dielectric layer **22** mainly comprises silicon oxide, but not limited thereto. These elements and the manufacturing methods thereof are well known to persons of ordinary skills in the art and the details will not be described here.

As shown in FIG. **2**, a second dielectric layer **26** is then formed on the first dielectric layer **22**. According to the preferred embodiment, the photoresist layer **28** sequentially includes an organic dielectric layer (ODL) **28***a*, a silicon-containing hard mask bottom anti-reflecting coating (SHB) **28***b* and a photoresist (PR) layer **28***c*. In short, the photoresist layer **28** is a tri-layer structure consisting of an ODL/SHB/PR structure, but not limited thereto. Afterwards, in order to form the metal plug that is electrically connected to the S/D region **14** (wherein the metal plug can replace the M0 and the lower contacts structure electrically connected to the S/D region in conventional process, denoted here as the 0th metal contact, M0CT), a photo-etching process is performed to pattern the photoresist layer **28***c* and to form a plurality of openings **30**, wherein each opening **30** is at least disposed correspondingly to the S/D region **14** disposed below, but not limited thereto. Parts of the openings **30** may be disposed correspondingly to the STI **17** surrounding the metal gate **12** to reduce the pattern density difference between the region including the transistor (mainly comprising the metal gate **12**, the S/D region **14** and the fin structure **16**) and the periphery region.

Afterwards, as shown in FIGS. **3**~**4**, at least one etching process E**1** is performed to transfer the pattern to others layer disposed below, wherein the etching process E**1** comprises: from top to bottom, etching the SHB **28***b*, the ODL **28***a*, the second dielectric layer **26** and the first dielectric layer **22** in sequence, until exposing the CESL **20**. As shown in FIG. **4**, another etching process E**2** is then performed, parts of the CESL **20** are removed to expose the epoxy layer **15** disposed below and to form a plurality of first trenches **32**, wherein each first trench **32** exposes the epoxy layer **15**. It is worth noting that since the epoxy layer is selectively formed, each first trench **32** may therefore directly expose the S/D region **14**. Besides, according to different embodiments, parts of the first trenches **32** may be disposed on STI **17**.

The etching process of the present invention uses etching gases, which may comprise per fluorocarbon gases, such as tetrafluoromethane (CF4), fluoroform (CHF3), hexafluoride-1,3+butadiene (C4F6), and further comprises oxygen and argon, but not limited thereto. It is worth noting that the higher the ratio of per fluorocarbon gases to oxygen in the etching gas is, the higher the selectivity of the silicon nitride to silicon oxide will be. In other words, the more per fluorocarbon gases are present in the etching gas, the faster the etching rate will be for etching the silicon nitride, compared with the etching rate for etching the silicon oxide. In this embodiment, the main material of the first dielectric layer **22** and the second dielectric layer **26** is silicon oxide, the main material of the CESL **20** is silicon nitride, and the etching gas in etching process E**1** is a high selectivity gas (to silicon nitride and silicon oxide), and the selectivity is preferably larger than 5, so the etching rate for etching the second dielectric layer **26** and etching the first dielectric layer **22** will be relatively fast, but the etching rate for etching the CESL **20** is relatively slow when the etching process E**1** is performed. The etching rate for etching the second dielectric layer **26** and etching the first dielectric layer **22** is at least five times higher than the etching rate for etching the CESL **20**, so the CESL **20** is not easily etched trough during the etching process E**1**, and the etching will stop on the surface of the CESL **20**. Afterwards, the etching gas is adjusted for the etching process E**2**, and the CESL **20** disposed on the bottom of the first trenches **32** will be removed during the etching process E**2**.

As shown in FIG. **5**, a salicide (self-aligned silicide) process is performed to the epoxy layer **15** to form a salicide layer **34** on the bottom of the first trenches **32**. The salicide process mainly comprises filling a metal layer (not shown) in each first trench **32**, and a thermal process is then performed to form a salicide layer **34** on the interface between the metal layer and the silicon-containing surface. Afterwards, the metal layer disposed in the first trenches **32** is removed. It is worth noting that since the salicide layer **34** is only formed on the silicon-containing surface, it may therefore be formed on the fin structure **16**, on the epoxy layer **15** or on the substrate **10**, but will not be formed on the STI **17**.

As shown in FIG. **6**, a photoresist layer **38** is then formed, wherein the material of the photoresist layer **38** may be the same as the material of the photoresist layer **28**, comprising an organic dielectric layer (ODL) **38***a*, a silicon-containing hard mask bottom anti-reflecting coating (SHB) **38***b* and a photoresist layer **38***c*. Afterwards, in order to form the metal plug that is electrically connected to the metal gate **12** (wherein the metal plug can replace the M0 and the lower contacts structure electrically connected to the metal gate in conventional process, denoted here as the 0th metal gate contact, M0PY), a photo-etching process is performed to pattern the photoresist layer **38***c* and to form a plurality of openings **40**, wherein each opening **40** is at least disposed correspondingly to the metal gate **12**, but not limited thereto. Parts of the opening **40** may be disposed correspondingly to the STI **17**.

As shown in FIG. **7**, an etching process E**3** is then performed to transfer the pattern to other layers disposed below, wherein the etching process E**3** comprises etching in sequence from top to bottom: the SHB **38***b*, the ODL **38***a*, the second dielectric layer **26** and the hard mask **24**. It is worth noting that in the etching process E**3**, the volume ratio of the per fluorocarbon gases to oxygen is adjusted to have an etching rate for etching the silicon nitride similar to the etching rate for etching the silicon oxide. In other words, the etching gas used in the etching process E**3** has a low-selectivity for the silicon nitride and silicon oxide (the selectivity is preferably smaller than 5), so the etching gas can therefore remove the silicon nitride and remove the silicon oxide simultaneously. After the etching process E**3** is performed, the top of the metal gate **12** can be exposed, besides, a plurality of second trenches **42** can be formed. Afterwards, the remaining photoresist layer and the ODL **38***a* disposed in the first trenches **32** or in the second trenches **42** can be removed through an ash process or other suitable processes.

As shown in FIG. **8**, a barrier layer **44** and a metal layer **46** are filled in each first trench **32** and each second trench **42** simultaneously, wherein the barrier layer **44** may comprise titanium nitride (TiN), tantalum nitride (TaN) or Ti/TiN multiple barrier layers to improve the adhesivity between the inner surface of each trench and the metal layer formed in the following steps. The metal layer **46** preferably comprises tungsten (W) that has better gap fill performances. A planarization process is then performed to remove the extra barrier layer and the metal layer disposed on the top surface of the second dielectric layer **26** to simultaneously form a plurality of first contacts **52** and a plurality of second contacts **54** in the first dielectric layer **22** and in the second dielectric layer **26**, wherein each first contact **52** at least is electrically connected to parts of the S/D region **14** (in other words, the first contacts **52** of the present embodiment are the M0CT mentioned above), each second contact **54** is at least electrically connected to parts of the metal gate **12** (in other words the second contacts **54** of the present embodiment are the M0PY mentioned above). In addition, since the first contacts **52** and the second contacts **54** are filled by the metal layer **46** and completed simultaneously, each first contact **52** and each second contact **54** is a monolithically formed structure. It is worth noting that in the present invention, parts of the second trenches **42** and parts of the first trenches **32** are partially overlapped, so parts of the first contact **52** will be connected to parts of the second contacts **54** (such as the second contact **54**A shown in FIG. **8**). These connection portions of the first contacts **52** and the second contacts **54** may be used as share contacts of a semiconductor device, but not limited thereto.

As shown in FIG. **9**, a metal interconnect process is performed, comprising forming a third dielectric layer **60** on the top of the second dielectric layer **26**, wherein the third dielectric layer **60** is like the inter metal dielectric (IMD) in conventional technology, and forming a plurality of via holes (not shown) and a plurality of trace patterns (not shown) through an etching process or other methods. Finally, a metal layer **61** is simultaneously filled in each via hole and each trace pattern, and a planarization process is performed to remove the extra metal layer on the surface of the third dielectric layer **60** to complete a plurality of via hole structures **62** and a plurality of trace structures **64** simultaneously. In this embodiment, the via hole structures **62** and the corresponding trace structures **64** can be regarded as third contacts **66**, wherein each third contact **66** is a monolithically formed structure. Each via hole structure **62** directly contacts the first contacts **52** or the second contacts **54** disposed below along a vertical direction. The trace structures **64** are on a same level, and electrically connected to others elements along a horizontal direction. The via hole structures **62** may have rectangular, circular or other block shapes, and the trace structures **64** may be lines or have striped shapes when viewed from top views, but not limited thereto.

It is worth noting that in the manufacturing process mentioned above, the first trenches **32** are formed before the second trenches **42** are formed, however, the present invention is not limited thereto. In another embodiment of the present invention, a low-selectivity etching gas may be used to form the second trenches **42**, and a high-selectivity etching gas is then used to form the first trenches **32**. A barrier layer **44** and a metal layer **46** are then filled into the first trenches **32** and the second trenches **42**. A planarization process is then performed to complete a plurality of first contacts **52** and a plurality of second contacts **54**. This manufacturing sequence should be comprised in the scope of the present invention.

A semiconductor device **1** of the present invention can be formed through the manufacturing process mentioned above, wherein the final structure is shown in FIG. **9**. Please refer to FIGS. **1**~**9**. The semiconductor device **1** at least comprises a substrate **10**, a first dielectric layer **22** disposed on the substrate **10**, a metal gate **12** disposed in the first dielectric layer **22**, a S/D region **14** disposed on two sides of the metal gate **12**, and a hard mask **24** disposed on the metal gate **12**, wherein the top surface of the hard mask **24** and the top of the first dielectric layer **22** are on the same level, a second dielectric layer **26** disposed on the first dielectric layer **22**. The present invention further comprises a plurality of first contacts **52** disposed in the first dielectric layer **22** and in the second dielectric layer **26** electrically connected to parts of the S/D region **14**, wherein each first contact **52** is a monolithically formed structure, and a plurality of second contacts **54** disposed in the first dielectric layer **22** and in the second dielectric layer **26** electrically connected to parts of the metal gate **12**, wherein each second contact **54** is a monolithically formed structure. In addition, the semiconductor device **1** selectively comprises the following components: an epoxy layer **15** disposed on the S/D region **14**, a STI **17** disposed in the substrate **10** surrounding the metal gate **12**, at least a spacer **18** and at least a CESL **20** disposed on two sides of the metal gate **12**, wherein both of the two elements have a truncated top surface, a fin structure **16** disposed on the substrate **10**, a salicide layer **34** disposed between each S/D region **14** and each first contact **52**, a third dielectric layer **60** disposed on the second dielectric layer **26**, and a plurality of third contacts **66** disposed on parts of the first contacts **52** or on parts of the second contacts **54**, wherein each third contact **66** is a monolithically formed structure, and each third contact **66** comprises a via hole structure **62** and a trace structure **64**, wherein each via hole structure **62** and each trace structure **64** comprise the same material, and contact each other. The other components, material properties, and manufacturing methods of the semiconductor device **1** are similar to those of the first preferred embodiment detailed above and will not be redundantly described.

In summary, the present invention comprises a hard mask on a metal gate, and uses etching gases with different etching rates to selectively etch the hard mask and the dielectric layer disposed above. Therefore, contacts disposed correspondingly to the metal gate and contacts disposed correspondingly to the S/D region can be formed simultaneously, and replace the 0th metal layer (M0) and the lower contact structures of conventional process, thereby reducing the manufacturing steps.

Those skilled in the art will readily observe that numerous modifications and alterations of the device and method may be made while retaining the teachings of the invention. Accordingly, the above disclosure should be construed as limited only by the metes and bounds of the appended claims.

What is claimed is:

1. A semiconductor structure, comprising:

a substrate;

a first dielectric layer disposed on the substrate;

at least two metal gates disposed in the first dielectric layer;

a spacer disposed on two sides of the metal gate, wherein the spacer has a truncated top surface;

a source/drain region (S/D region) disposed between two metal gates;

a plurality of first contacts disposed in the first dielectric layer that are electrically connected to parts of the S/D region;

a plurality of second contacts disposed in the first dielectric layer that are electrically connected to one of the metal gates, wherein at least one of the first contacts directly connects at least one of the second contacts; and

a hard mask disposed on one of the metal gates, wherein the top surface of the hard mask and the top surface of the first dielectric layer are on the same level.

2. The semiconductor device of claim **1**, further comprising a second dielectric layer disposed on the first dielectric layer.

3. The semiconductor device of claim **2**, further comprising an etching stop layer disposed on two sides of the metal gate, and the etching stop layer has a truncated top surface.

4. The semiconductor device of claim **2**, wherein the first contacts disposed in the first dielectric layer and in the second dielectric layer and each first contact is a monolithically formed structure.

5. The semiconductor device of claim **2**, wherein the second contacts disposed in the first dielectric layer and in the second dielectric layer and each second contact is a monolithically formed structure.

6. The semiconductor device of claim **1**, further comprising at least one fin structure disposed on the substrate.

7. The semiconductor device of claim **1**, further comprising a salicide layer disposed between each S/D region and each first contact.

8. The semiconductor device of claim **3**, further comprising a plurality of third contacts disposed on parts of the first contacts and on parts of the second contacts, wherein each third contact is a monolithically formed structure.

9. The semiconductor device of claim **8**, wherein each third contact comprises a via hole structure and a trace structure, wherein the via hole structure and the trace structure comprise the same material and contact each other directly.

* * * * *