US009697230B2

(12) **United States Patent**
Houh et al.

(10) **Patent No.: US 9,697,230 B2**
(45) **Date of Patent: Jul. 4, 2017**

(54) **METHODS AND APPARATUS FOR DYNAMIC PRESENTATION OF ADVERTISING, FACTUAL, AND INFORMATIONAL CONTENT USING ENHANCED METADATA IN SEARCH-DRIVEN MEDIA APPLICATIONS**

(75) Inventors: **Henry Houh**, Lexington, MA (US); **Jeffrey Nathan Stern**, Belmont, MA (US)

(73) Assignee: **CXENSE ASA**, Olso (NO)

(*) Notice: Subject to any disclaimer, the term of this patent is extended or adjusted under 35 U.S.C. 154(b) by 953 days.

(21) Appl. No.: **11/395,608**

(22) Filed: **Mar. 31, 2006**

(65) **Prior Publication Data**

US 2007/0106760 A1 May 10, 2007

Related U.S. Application Data

(60) Provisional application No. 60/736,124, filed on Nov. 9, 2005.

(51) **Int. Cl.**
G06F 15/16 (2006.01)
G06F 17/30 (2006.01)

(52) **U.S. Cl.**
CPC .. ***G06F 17/30247*** (2013.01); ***G06F 17/30787*** (2013.01); ***G06F 17/30796*** (2013.01); ***G06F 17/30817*** (2013.01); ***G06F 17/30852*** (2013.01)

(58) **Field of Classification Search**
USPC 707/3, 10, 4, 5, 102; 705/50, 51, 57, 59; 725/119, 134, 135, 136, 46, 9, 37
See application file for complete search history.

(56) **References Cited**

U.S. PATENT DOCUMENTS

5,613,034	A	3/1997	Ney et al.	395/2.6
5,613,036	A	3/1997	Strong	395/2.52
6,006,265	A *	12/1999	Rangan et al.	709/226
6,064,959	A	5/2000	Young et al.	
6,081,779	A	6/2000	Besling et al.	704/257
6,112,172	A	8/2000	True et al.	
6,157,912	A	12/2000	Kneser et al.	704/270
6,345,253	B1	2/2002	Viswanathan	
6,418,431	B1	7/2002	Mahajan et al.	707/4
6,484,136	B1	11/2002	Kanevsky et al.	704/9
6,501,833	B2	12/2002	Phillips et al.	379/88.07

(Continued)

FOREIGN PATENT DOCUMENTS

EP	1 008 931 A2	6/2000
JP	2004350253	9/2004

(Continued)

OTHER PUBLICATIONS

International Search Report for International Application No. PCT/US2006/043561, Date of Mailing May 9, 2007 (3 pages).

(Continued)

Primary Examiner — Brian Whipple
(74) *Attorney, Agent, or Firm* — Tarter Krinsky & Drogin LLP

(57) **ABSTRACT**

A computerized method and apparatus is disclosed for dynamic presentation of advertising, factual, informational content and combinations thereof. In particular, the advertising content is dynamically presented according to the playback of corresponding segments identified within a media file or stream.

20 Claims, 18 Drawing Sheets

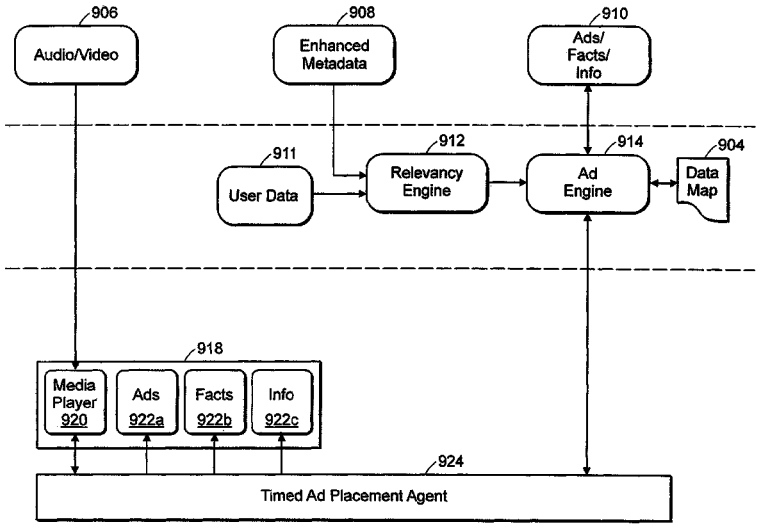

(56) **References Cited**

U.S. PATENT DOCUMENTS

6,546,427	B1 *	4/2003	Ehrlich et al.	709/231
6,611,803	B1	8/2003	Furuyama et al.	704/254
6,671,692	B1	12/2003	Marpe et al.	
6,687,697	B2	2/2004	Collins-Thompson et al.	707/6
6,691,123	B1	2/2004	Gulliksen	
6,697,796	B2	2/2004	Kermani	
6,728,673	B2	4/2004	Furuyama et al.	704/254
6,728,763	B1	4/2004	Chen	709/219
6,738,745	B1	5/2004	Navratil et al.	704/277
6,748,375	B1	6/2004	Wong et al.	
6,768,999	B2	7/2004	Prager et al.	
6,785,688	B2	8/2004	Abajian et al.	
6,816,858	B1	11/2004	Coden et al.	707/5
6,848,080	B1	1/2005	Lee et al.	715/533
6,856,997	B2	2/2005	Lee et al.	
6,859,799	B1	2/2005	Yuen	
6,873,993	B2	3/2005	Charlesworth et al.	
6,877,134	B1	4/2005	Fuller et al.	
6,973,428	B2	12/2005	Boguraev et al.	704/251
6,985,861	B2	1/2006	Van Thong et al.	
7,111,009	B1	9/2006	Gupta et al.	
7,120,582	B1	10/2006	Young et al.	
7,177,881	B2	2/2007	Schwesig et al.	
7,222,155	B1 *	5/2007	Gebhardt et al.	709/204
7,260,564	B1 *	8/2007	Lynn et al.	707/3
7,308,487	B1	12/2007	Dansie et al.	
7,337,462	B2 *	2/2008	Dudkiewicz	G06F 17/30017 348/465
7,801,910	B2	9/2010	Houh et al.	
2001/0045962	A1	11/2001	Lee et al.	345/745
2001/0049826	A1	12/2001	Wilf	
2002/0052925	A1 *	5/2002	Kim et al.	709/217
2002/0069218	A1	6/2002	Sull et al.	
2002/0099695	A1	7/2002	Abajian et al.	
2002/0108112	A1	8/2002	Wallace et al.	
2002/0133398	A1 *	9/2002	Geller et al.	705/14
2002/0143852	A1	10/2002	Guo et al.	709/201
2003/0123841	A1 *	7/2003	Jeannin	386/46
2003/0171926	A1	9/2003	Suresh et al.	704/270.1
2004/0103433	A1	5/2004	Regeard et al.	725/53
2004/0199502	A1	10/2004	Wong et al.	
2004/0199507	A1	10/2004	Tawa, Jr.	707/7
2004/0205535	A1	10/2004	Newman et al.	
2005/0033758	A1	2/2005	Baxter	707/100
2005/0086692	A1 *	4/2005	Dudkiewicz et al.	725/46
2005/0096910	A1	5/2005	Watson et al.	
2005/0165771	A1	7/2005	Go et al.	
2005/0187965	A1	8/2005	Abajian	
2005/0197724	A1	9/2005	Neogi	700/94
2005/0198570	A1 *	9/2005	Otsuka	G06F 17/30787 715/201
2005/0216443	A1	9/2005	Morton et al.	
2005/0229118	A1	10/2005	Chiu et al.	
2005/0234875	A1	10/2005	Auerbach et al.	707/3
2005/0256867	A1	11/2005	Walther et al.	707/5
2006/0015904	A1	1/2006	Marcus	725/46
2006/0020662	A1	1/2006	Robinson	709/203
2006/0020971	A1	1/2006	Poslinski	725/44
2006/0047580	A1	3/2006	Saha	705/26
2006/0053156	A1	3/2006	Kaushansky et al.	707/102
2006/0265421	A1	11/2006	Ranasinghe et al.	
2007/0005569	A1	1/2007	Hurst-Hiller et al.	
2007/0041522	A1	2/2007	Abella et al.	
2007/0078708	A1	4/2007	Yu et al.	
2007/0100787	A1	5/2007	Lim et al.	
2007/0106646	A1	5/2007	Stern et al.	
2007/0106660	A1	5/2007	Stern et al.	
2007/0106685	A1	5/2007	Houh et al.	
2007/0106693	A1	5/2007	Houh et al.	
2007/0118873	A1	5/2007	Houh et al.	
2007/0183741	A1 *	8/2007	Lerman	G06F 17/30017 386/249
2007/0233879	A1 *	10/2007	Woods	G06Q 30/02 709/227
2008/0040224	A1 *	2/2008	Roker	G06Q 30/02 705/14.66
2009/0222442	A1	9/2009	Houh et al.	

FOREIGN PATENT DOCUMENTS

KR	2002024865	A1	4/2002	
WO	WO02/11123	A2	2/2002	G10L 17/00
WO	WO 2005/004442	A1	1/2005	
WO	2007/056485	A2	5/2007	
WO	2007/056531	A1	5/2007	
WO	2007/056532	A1	5/2007	
WO	2007/056534	A1	5/2007	
WO	2007/056535	A2	5/2007	

OTHER PUBLICATIONS

Van Thong, et al., "SPEECHBOT: An Experimental Speech-Based Search Engine for Multimedia Content in the Web," Cambridge Research Laboratory, Technical Report Series, 19 pages, Jul. 2001.

International Search Report for PCT/US2006/043683 dated Aug. 2, 2007 (3 pages).

Written Opinion of the International Searching Authority for PCT/US2006/043683 dated Aug. 2, 2007 (6 pages).

Stuart, Anne, "SpeechBot: A Search Engine for Sound," http://www.hpl.hp.com/cgi-bn/pf.cgi, last visited on Nov. 6, 2006 (4 pages).

"BBN Audio Indexer," BBN Technologies, A Verizon Company, last visited on Nov. 6, 2006, http://web.archive.org/web/20020214165834/http://www.bbn.com/speech/audioindexer.html, approximately Feb. 14, 2002, as indicated on Wayback Machine website at http://web.archive.org/web/*/http://www.bbn.com/speech/audioindexer.html, last visited on Nov. 6, 2006 (3 pages).

International Search Report for International Application No. PCT/US2006/043680, date of mailing Apr. 27, 2007 (3 pages).

International Search Report for International Application No. PCT/US2006/043682, date of mailing Mar. 30, 2007, including Written Opinion of the International Searching Authority (10 pages total).

International Search Report for PCT/US2006/043561, dated Apr. 17, 2007 (3 pages).

Lindblad, Christopher J., et al., "ViewStation Applications: Implications for Network Traffic," IEEE Journal of Selected Areas in Communications, 1995.

Little, T.D.C., et al., "A Digital On-Demand Video Service Supporting Content-Based Queries," International Multimedia Conference, Proceedings of the First ACM International Conference on Multimedia, Anaheim, CA, Sep. 1993, 10 pages.

Van Thong, Jean-Manuel "SpeechBot: a Speech Recognition based Audio Indexing System for the Web", 2000, 10 pages, available on internet at: http://apotheca.hpl.hp.com/ftp/pub/compaq/CRL/publications/jmvt/speechbotRIAO2000.pdf.

International Preliminary Report on Patentability received for PCT Patent Application No. PCT/US2006/043682, issued on May 14, 2008, 6 pages.

International Preliminary Report on Patentability received for PCT Patent Application No. PCT/US2006/043683, issued on May 14, 2008, 6 pages.

Bregler et al.,"Video Rewrite: Driving Visual Speech with Audio", ACM SIGGRAPH, 1997, pp. 1-8.

International Preliminary Report on Patentability received for PCT patent Application No. PCT/US2006/043561, issued on May 14, 2008, 6 pages.

International Search Report and Written Opinion received for PCT Patent Application No. PCT/US2006/043679, mailed on Apr. 27, 2007, 7 pages.

International Preliminary Report on Patentability received for PCT Patent Application No. PCT/US2006/043679, issued on May 14, 2008, 6 pages.

International Preliminary Report on Patentability received for PCT Patent Application No. PCT/US2006/043680, issued on May 14, 2008, 6 pages.

* cited by examiner

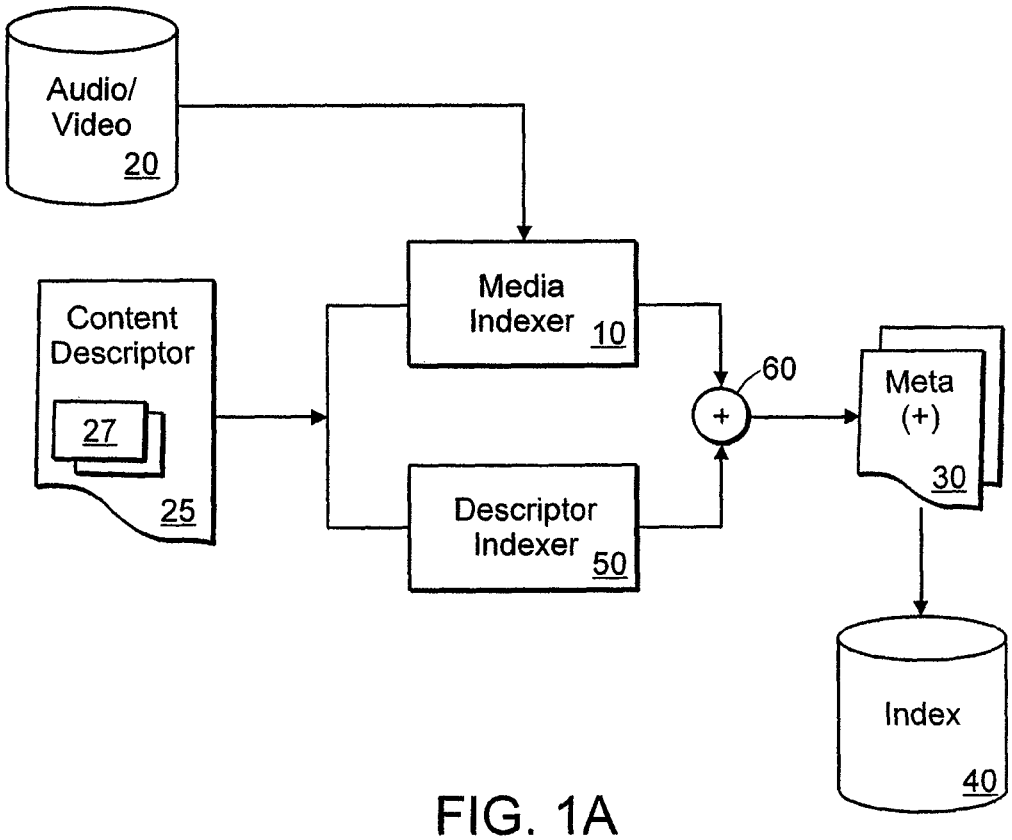
Audio/
Video
20
Content
Descriptor
27
25
Media
Indexer
10
Descriptor
Indexer
50
60
+
Meta
(+)
30
Index
40

FIG. 1A

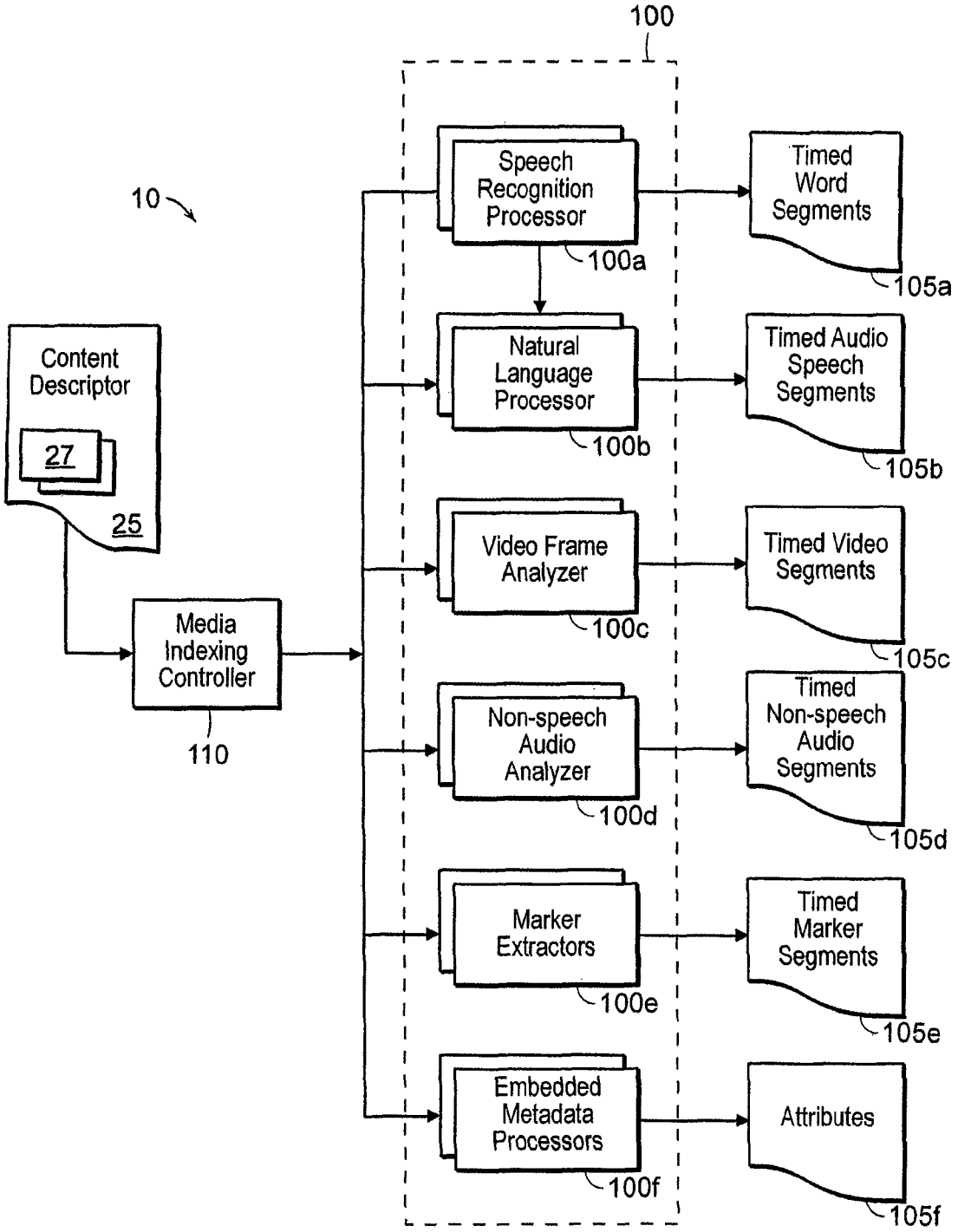
100
10
Content Descriptor
27
25
Media Indexing Controller
110
Speech Recognition Processor
100a
Natural Language Processor
100b
Video Frame Analyzer
100c
Non-speech Audio Analyzer
100d
Marker Extractors
100e
Embedded Metadata Processors
100f
Timed Word Segments
105a
Timed Audio Speech Segments
105b
Timed Video Segments
105c
Timed Non-speech Audio Segments
105d
Timed Marker Segments
105e
Attributes
105f

FIG. 1B

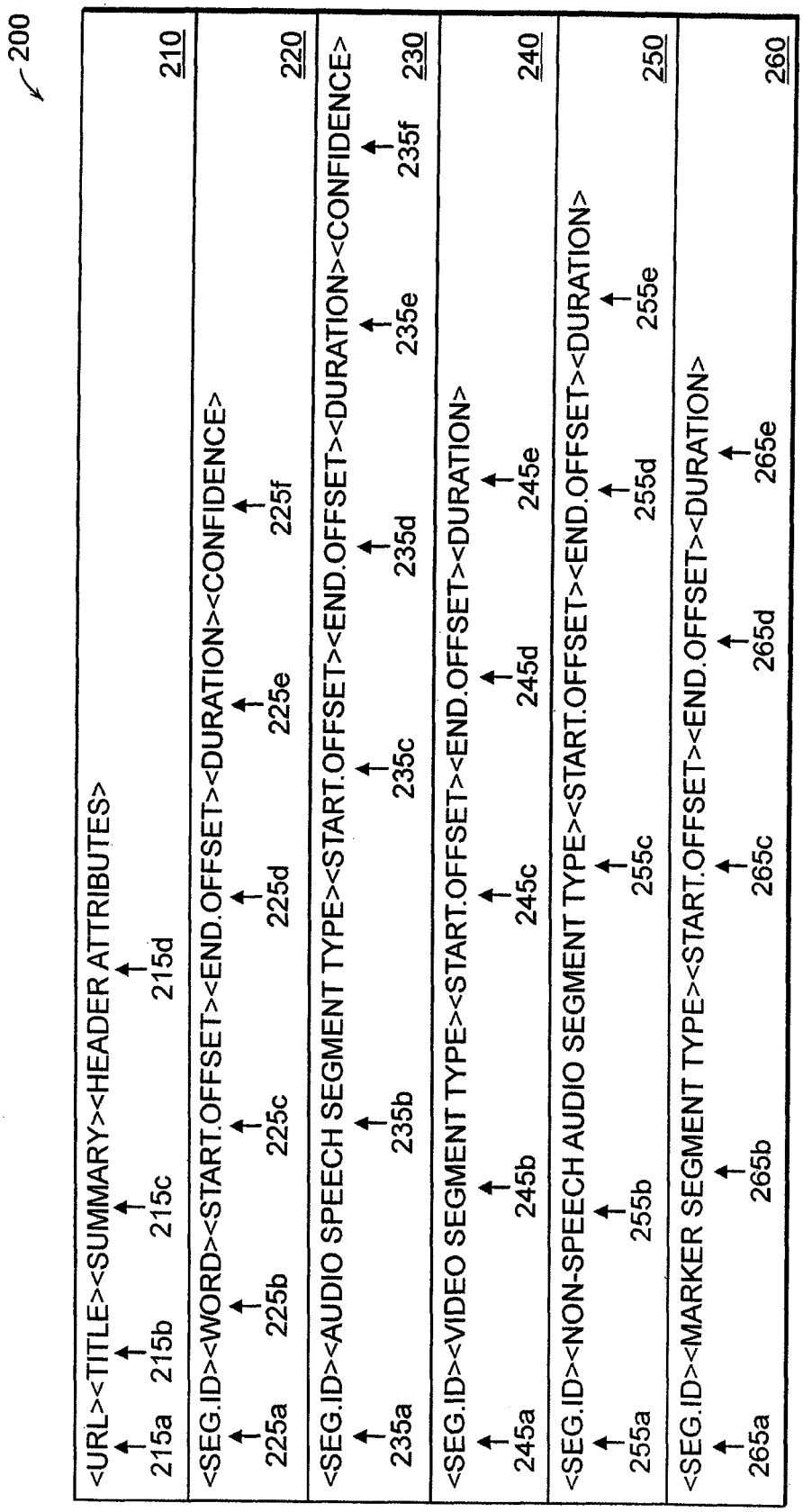
200
<URL><TITLE><SUMMARY><HEADER ATTRIBUTES>
215a 215b 215c 215d
210
<SEG.ID><WORD><START.OFFSET><END.OFFSET><DURATION><CONFIDENCE>
225a 225b 225c 225d 225e 225f
220
<SEG.ID><AUDIO SPEECH SEGMENT TYPE><START.OFFSET><END.OFFSET><DURATION><CONFIDENCE>
235a 235b 235c 235d 235e 235f
230
<SEG.ID><VIDEO SEGMENT TYPE><START.OFFSET><END.OFFSET><DURATION>
245a 245b 245c 245d 245e
240
<SEG.ID><NON-SPEECH AUDIO SEGMENT TYPE><START.OFFSET><END.OFFSET><DURATION>
255a 255b 255c 255d 255e
250
<SEG.ID><MARKER SEGMENT TYPE><START.OFFSET><END.OFFSET><DURATION>
265a 265b 265c 265d 265e
260

FIG. 2

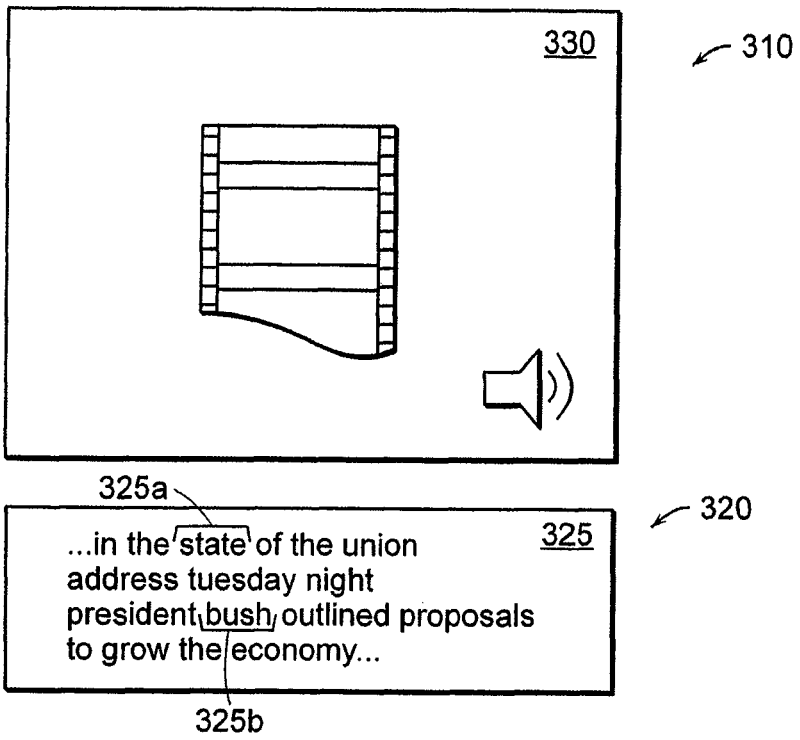
330
310
325a
320
...in the state of the union
address tuesday night
president bush outlined proposals
to grow the economy...
325
325b

FIG. 3

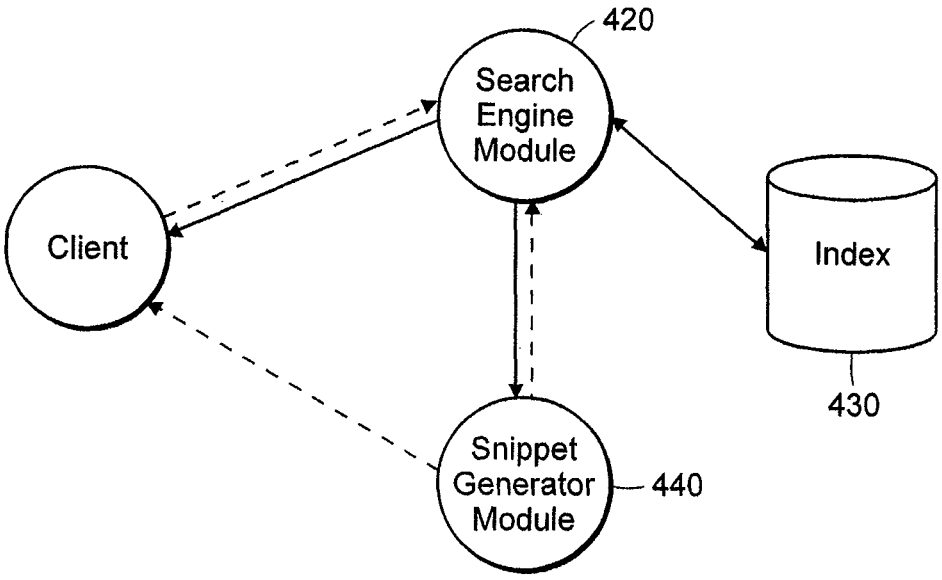
420
Search
Engine
Module
Client
Index
430
Snippet
Generator
Module
440

FIG. 4

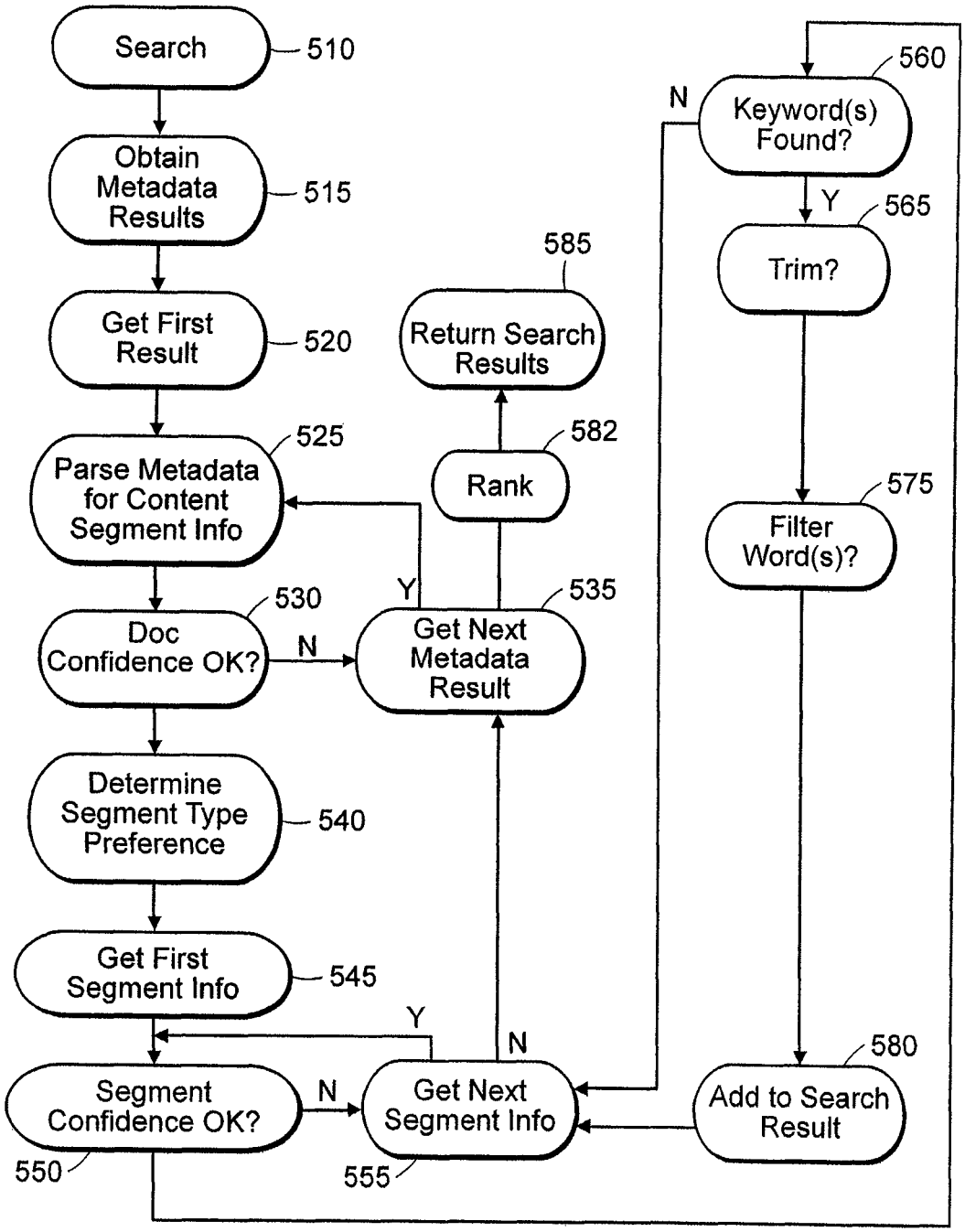
Search
510
Obtain Metadata Results
515
Get First Result
520
Parse Metadata for Content Segment Info
525
Doc Confidence OK?
530
N
Y
Get Next Metadata Result
535
Rank
582
Return Search Results
585
Determine Segment Type Preference
540
Get First Segment Info
545
Segment Confidence OK?
550
N
Y
Get Next Segment Info
555
N
Keyword(s) Found?
560
Y
Trim?
565
Filter Word(s)?
575
Add to Search Result
580

FIG. 5

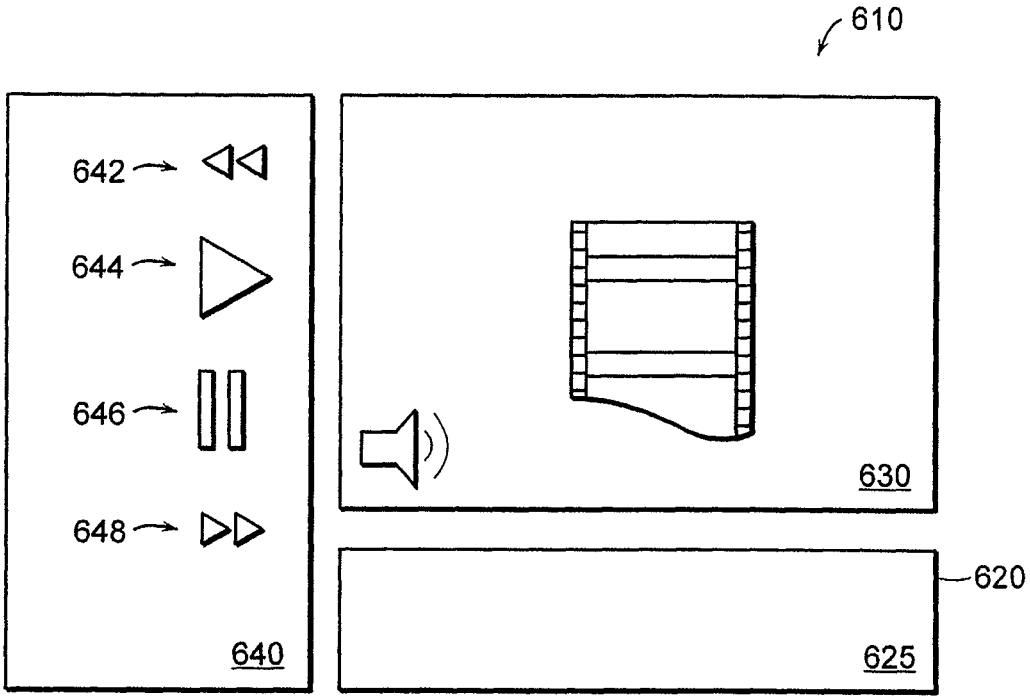

FIG. 6A

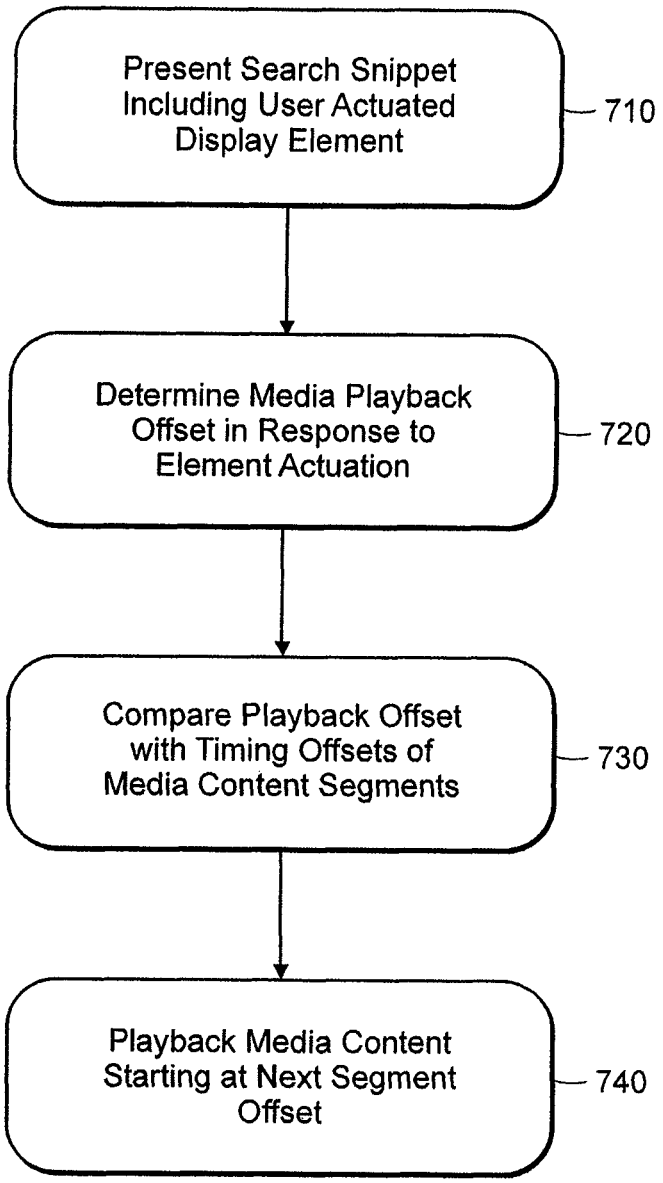
Present Search Snippet Including User Actuated Display Element
710
Determine Media Playback Offset in Response to Element Actuation
720
Compare Playback Offset with Timing Offsets of Media Content Segments
730
Playback Media Content Starting at Next Segment Offset
740

FIG. 6B

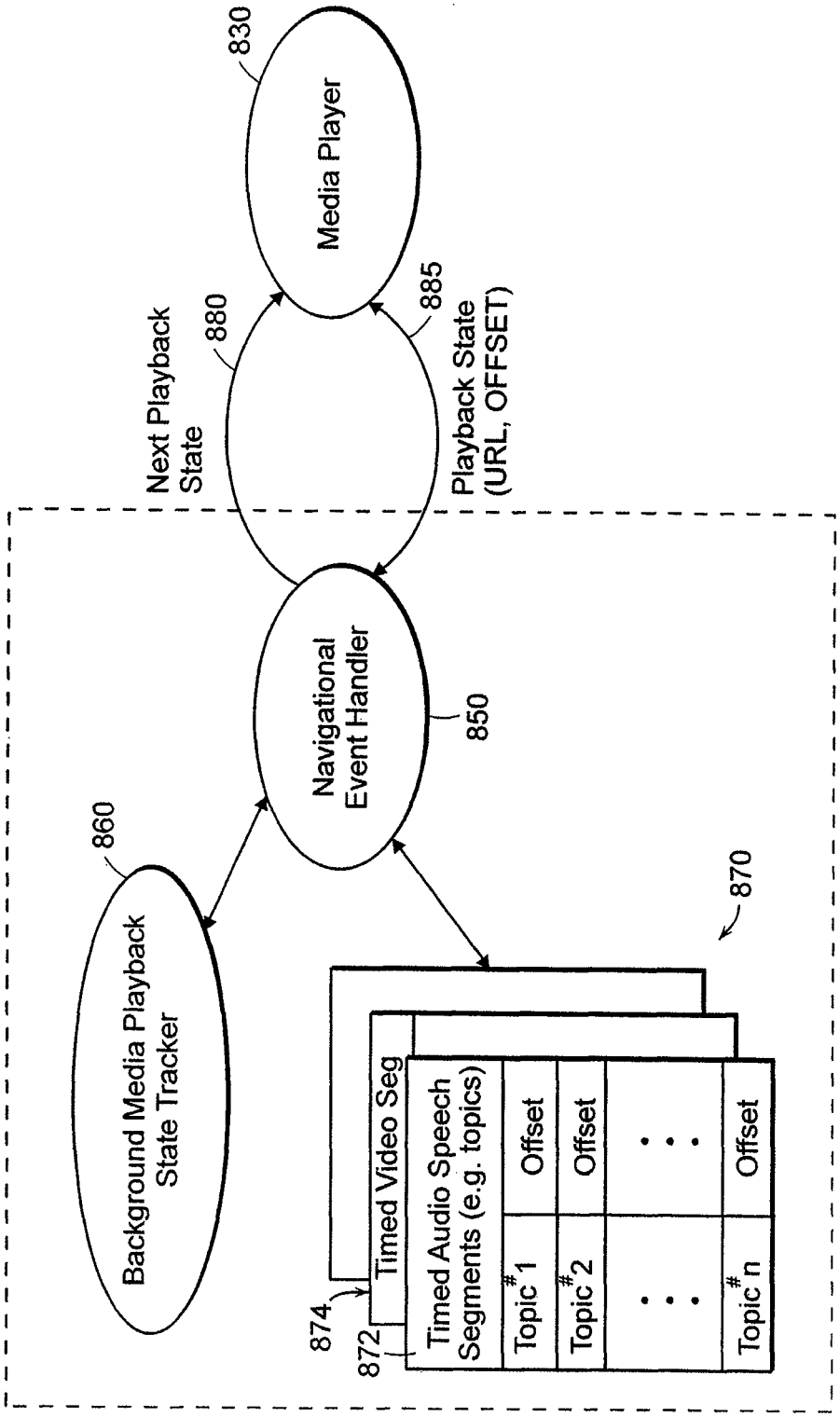
Media Player
830
Next Playback State
880
885
Playback State (URL, OFFSET)
Navigational Event Handler
850
860
Background Media Playback State Tracker
870
874
872
Timed Video Seg
Timed Audio Speech Segments (e.g. topics)
Topic#1
Offset
Topic#2
Offset
Topic#n
Offset

FIG. 6C

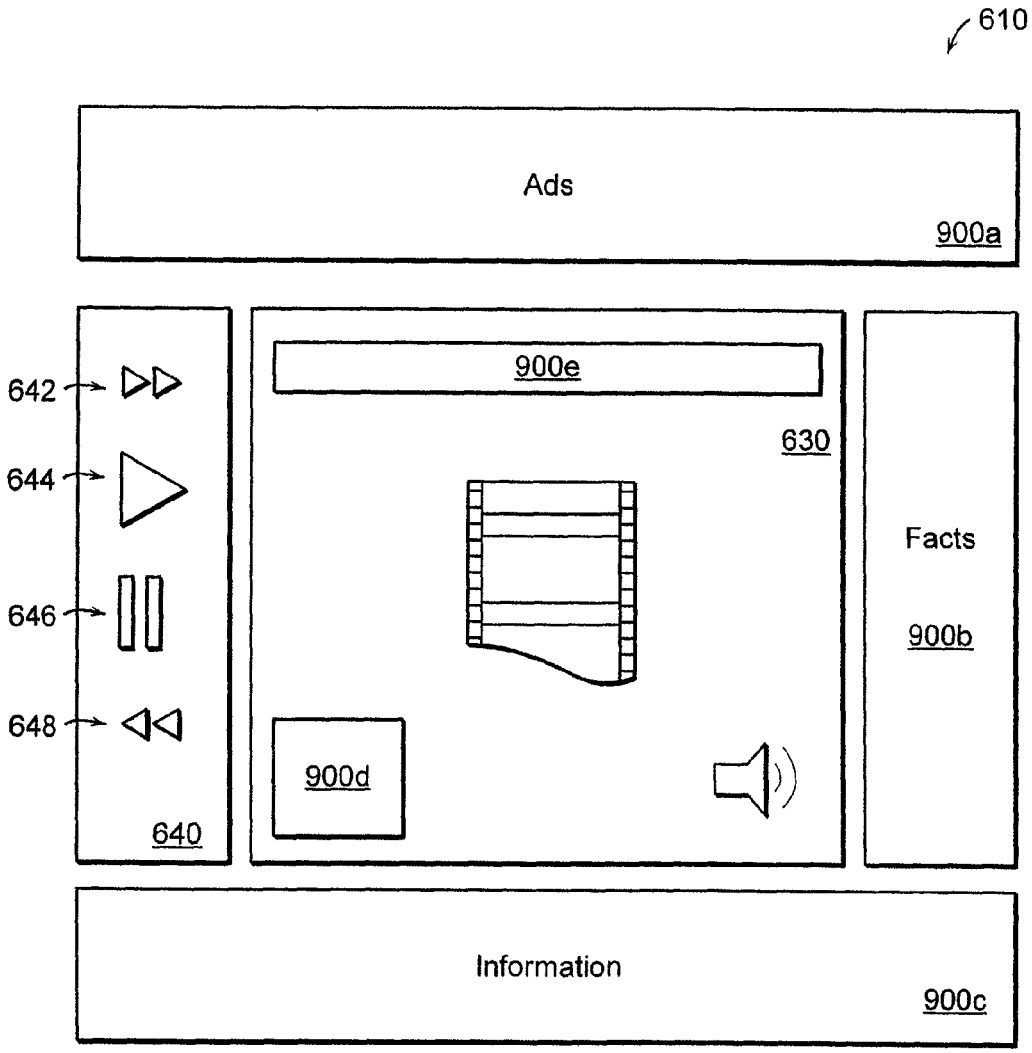
610
Ads
900a
642
644
646
648
640
900e
630
900d
Facts
900b
Information
900c

FIG. 7A

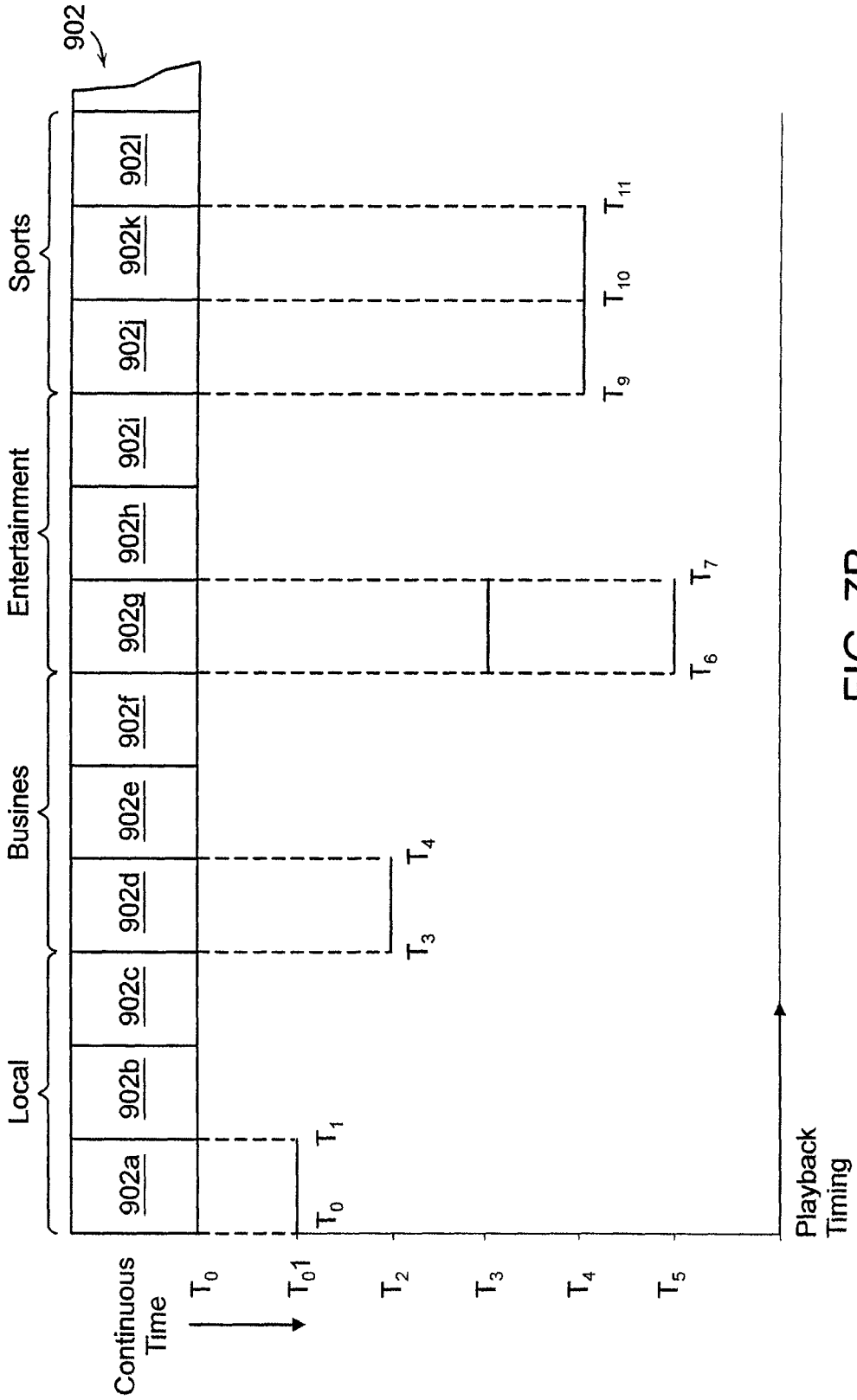
902
Local
Busines
Entertainment
Sports
902a
902b
902c
902d
902e
902f
902g
902h
902i
902j
902k
902l
T_0
T_1
T_3
T_4
T_6
T_7
T_9
T_{10}
T_{11}
Continuous Time
T_0
T_01
T_2
T_3
T_4
T_5
Playback Timing

FIG. 7B

904

904a SEG ID	904b START	904c END	904d AD	904e FACT	904f INFO
902a	T_0	T_1	AD_0	$FACT_0$	$INFO_0$
•					
•					
•					
902j	T_9	T_{10}	AD_9	$FACT_9$	$INFO_9$
902k	T_{10}	T_{11}	AD_{10}	$FACT_{10}$	$INFO_{10}$
•					
•					
•					

FIG. 7C

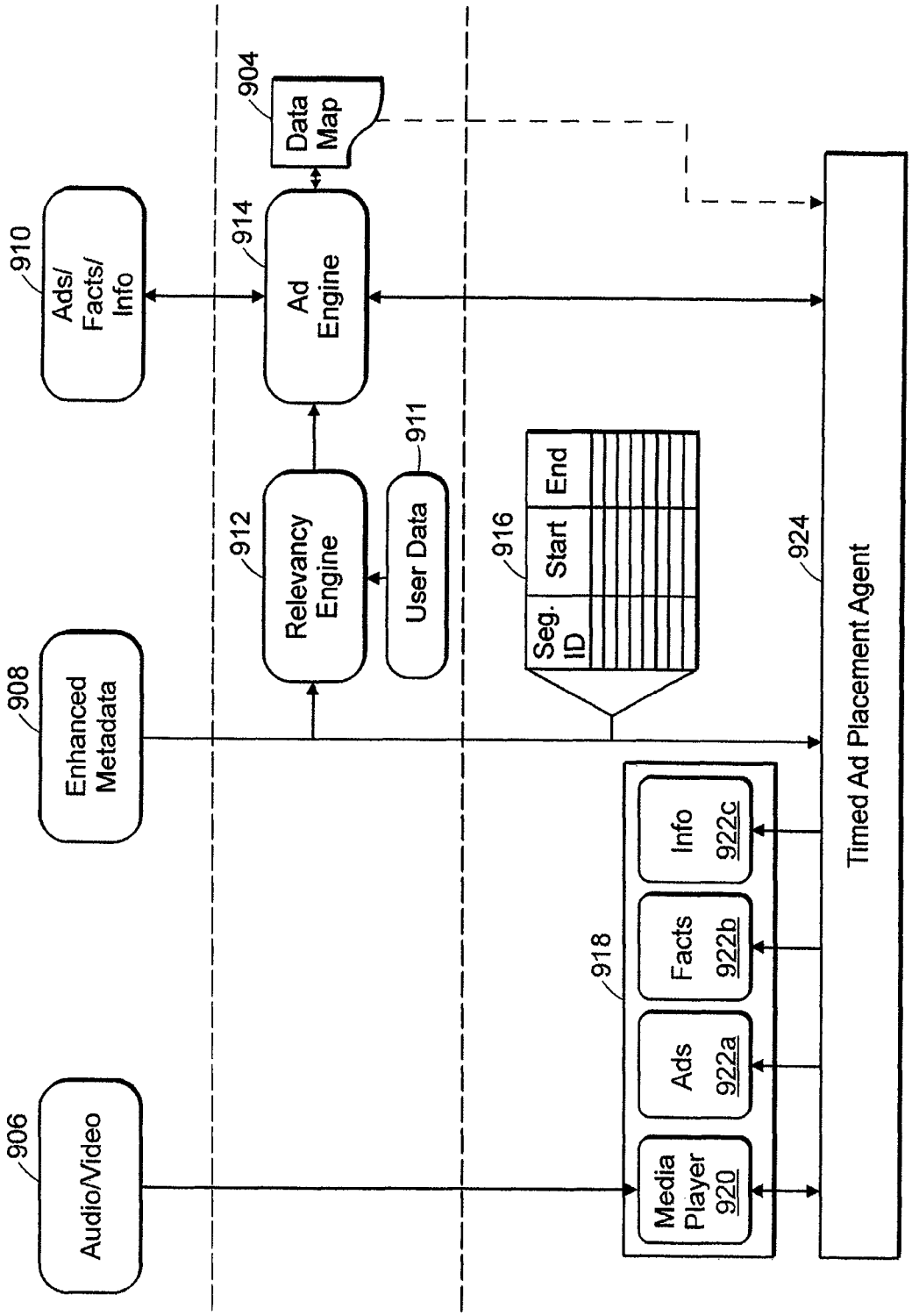
906
Audio/Video
908
Enhanced Metadata
910
Ads/ Facts/ Info
912
Relevancy Engine
911
User Data
914
Ad Engine
904
Data Map
916
Seg. ID
Start
End
918
Media Player 920
Ads 922a
Facts 922b
Info 922c
924
Timed Ad Placement Agent

FIG. 8A

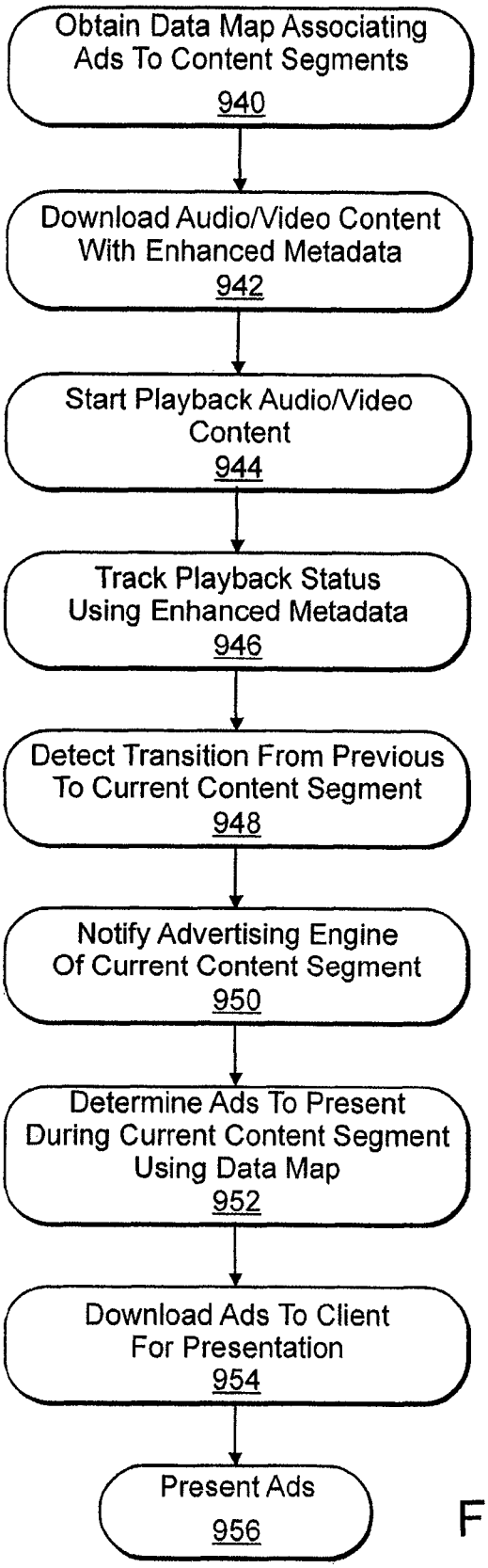
Obtain Data Map Associating Ads To Content Segments
940
Download Audio/Video Content With Enhanced Metadata
942
Start Playback Audio/Video Content
944
Track Playback Status Using Enhanced Metadata
946
Detect Transition From Previous To Current Content Segment
948
Notify Advertising Engine Of Current Content Segment
950
Determine Ads To Present During Current Content Segment Using Data Map
952
Download Ads To Client For Presentation
954
Present Ads
956

FIG. 8B

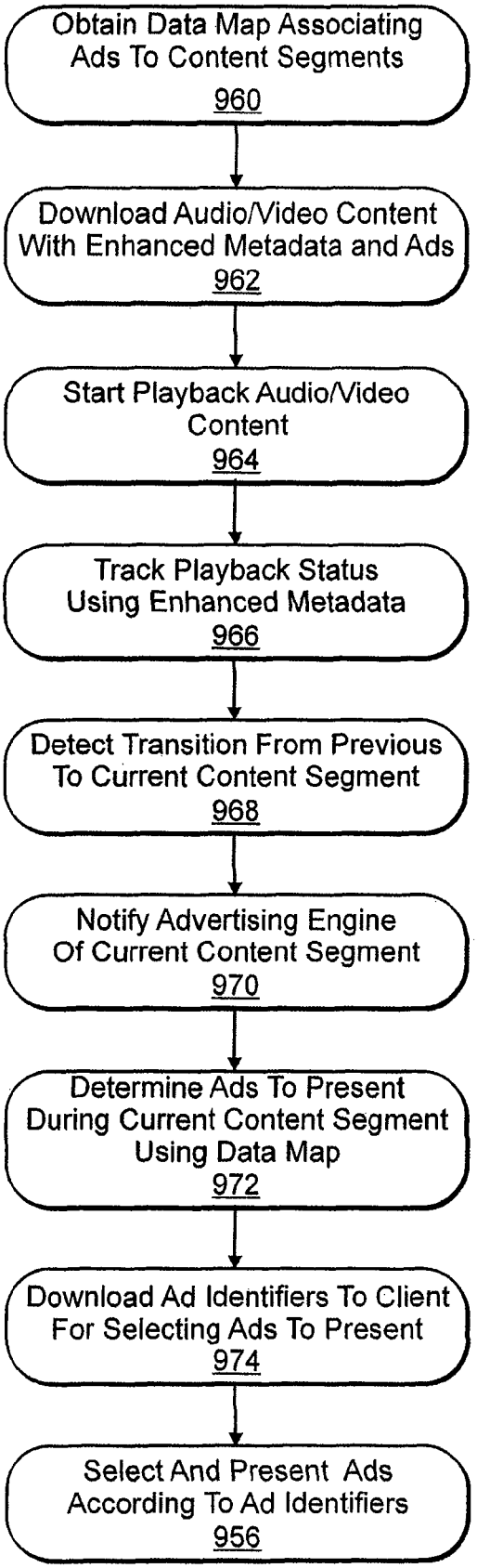
Obtain Data Map Associating Ads To Content Segments
960
Download Audio/Video Content With Enhanced Metadata and Ads
962
Start Playback Audio/Video Content
964
Track Playback Status Using Enhanced Metadata
966
Detect Transition From Previous To Current Content Segment
968
Notify Advertising Engine Of Current Content Segment
970
Determine Ads To Present During Current Content Segment Using Data Map
972
Download Ad Identifiers To Client For Selecting Ads To Present
974
Select And Present Ads According To Ad Identifiers
956

FIG. 8C

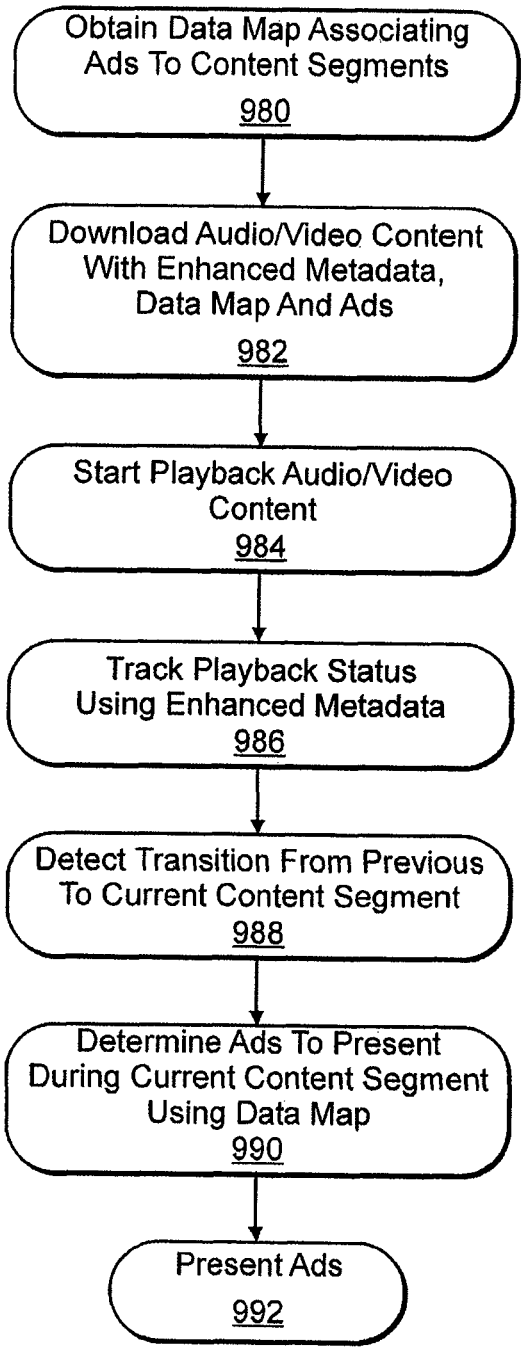
Obtain Data Map Associating Ads To Content Segments
980
Download Audio/Video Content With Enhanced Metadata, Data Map And Ads
982
Start Playback Audio/Video Content
984
Track Playback Status Using Enhanced Metadata
986
Detect Transition From Previous To Current Content Segment
988
Determine Ads To Present During Current Content Segment Using Data Map
990
Present Ads
992

FIG. 8D

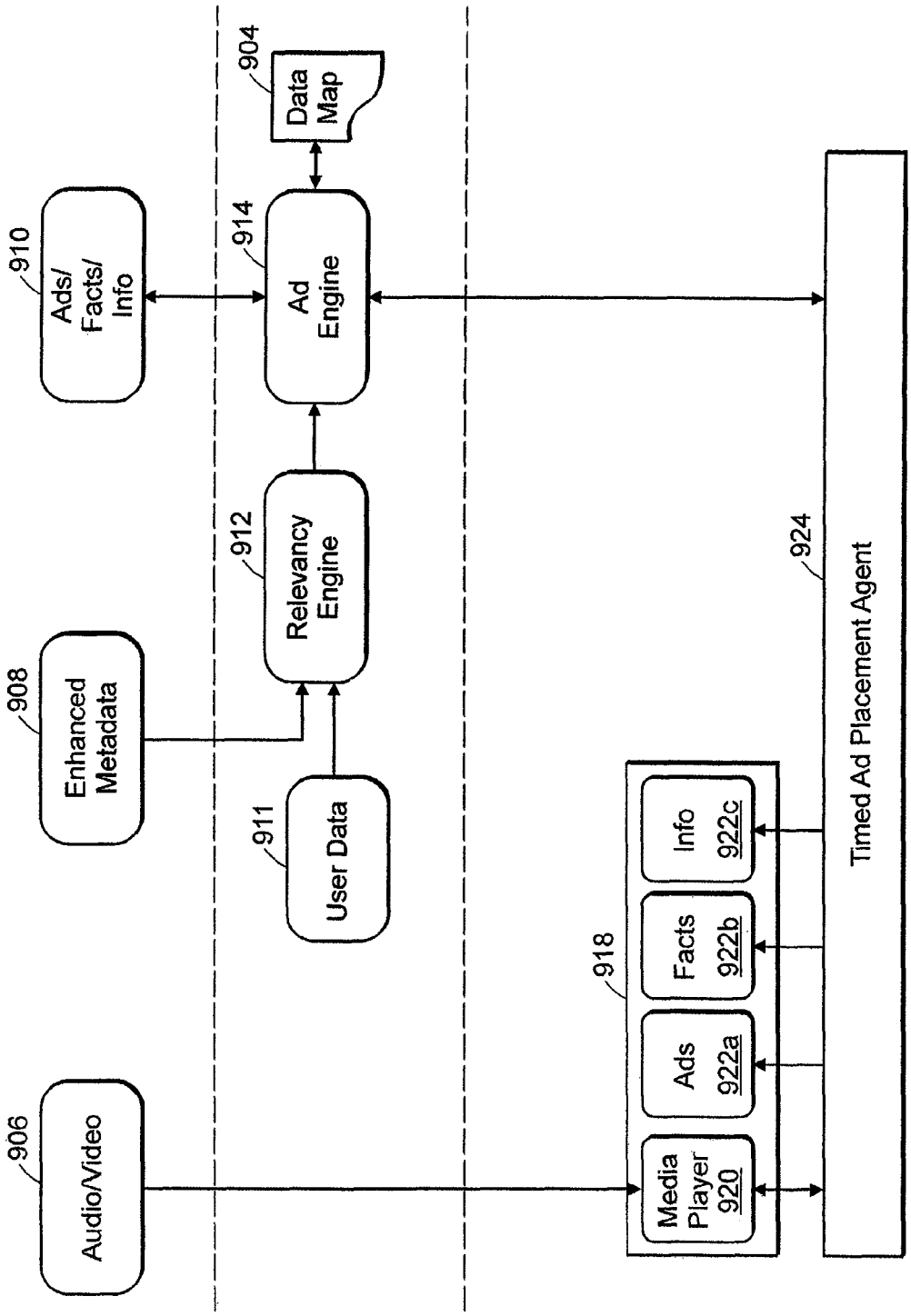
906
Audio/Video
908
Enhanced Metadata
910
Ads/ Facts/ Info
911
User Data
912
Relevancy Engine
914
Ad Engine
904
Data Map
918
Media Player 920
Ads 922a
Facts 922b
Info 922c
924
Timed Ad Placement Agent

FIG. 9A

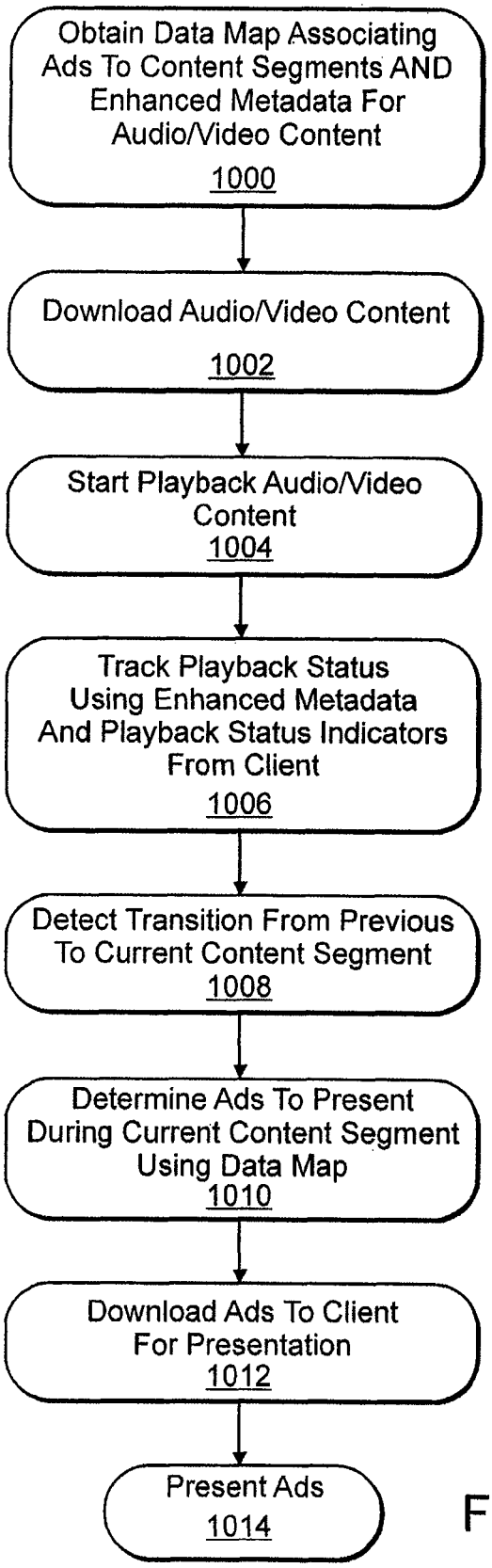
Obtain Data Map Associating Ads To Content Segments AND Enhanced Metadata For Audio/Video Content
1000
Download Audio/Video Content
1002
Start Playback Audio/Video Content
1004
Track Playback Status Using Enhanced Metadata And Playback Status Indicators From Client
1006
Detect Transition From Previous To Current Content Segment
1008
Determine Ads To Present During Current Content Segment Using Data Map
1010
Download Ads To Client For Presentation
1012
Present Ads
1014

FIG. 9B

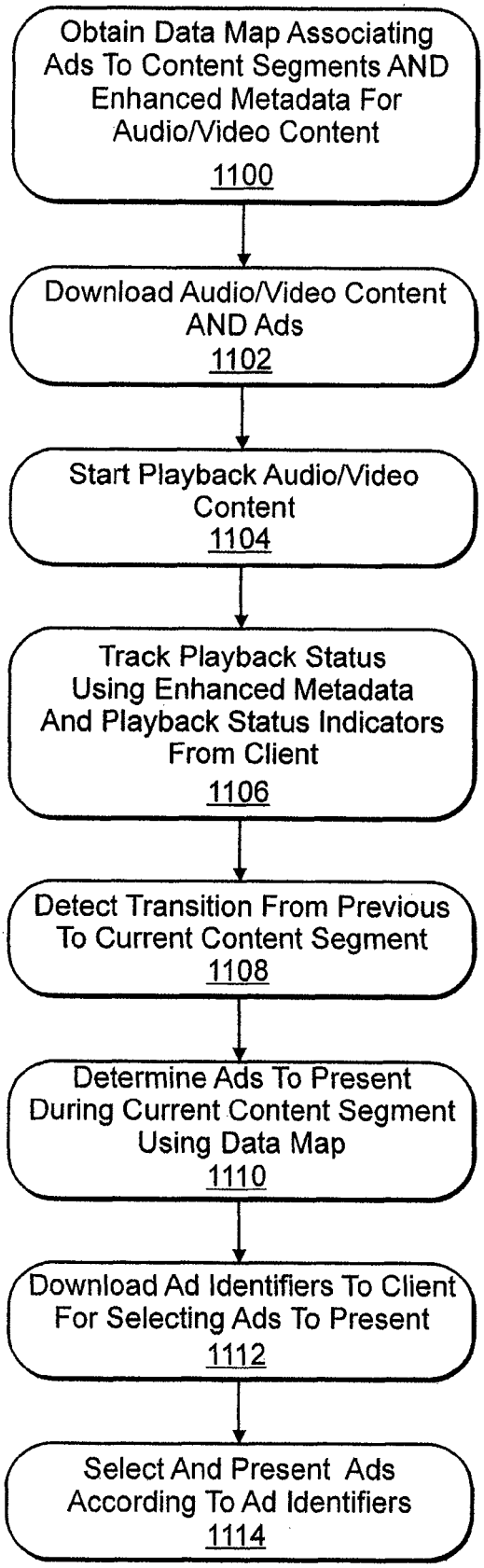
Obtain Data Map Associating Ads To Content Segments AND Enhanced Metadata For Audio/Video Content
1100
Download Audio/Video Content AND Ads
1102
Start Playback Audio/Video Content
1104
Track Playback Status Using Enhanced Metadata And Playback Status Indicators From Client
1106
Detect Transition From Previous To Current Content Segment
1108
Determine Ads To Present During Current Content Segment Using Data Map
1110
Download Ad Identifiers To Client For Selecting Ads To Present
1112
Select And Present Ads According To Ad Identifiers
1114

FIG. 9C

METHODS AND APPARATUS FOR DYNAMIC PRESENTATION OF ADVERTISING, FACTUAL, AND INFORMATIONAL CONTENT USING ENHANCED METADATA IN SEARCH-DRIVEN MEDIA APPLICATIONS

RELATED APPLICATIONS

This application claims the benefit of U.S. Provisional Application No. 60/736,124, filed on Nov. 9, 2005. The entire teachings of the above application are incorporated herein by reference.

FIELD OF THE INVENTION

Aspects of the invention relate to methods and apparatus for generating and using enhanced metadata in search-driven applications.

BACKGROUND OF THE INVENTION

As the World Wide Web has emerged as a major research tool across all fields of study, the concept of metadata has become a crucial topic. Metadata, which can be broadly defined as "data about data," refers to the searchable definitions used to locate information. This issue is particularly relevant to searches on the Web, where metatags may determine the ease with which a particular Web site is located by searchers. Metadata that are embedded with content is called embedded metadata. A data repository typically stores the metadata detached from the data.

Results obtained from search engine queries are limited to metadata information stored in a data repository, referred to as an index. With respect to media files or streams, the metadata information that describes the audio content or the video content is typically limited to information provided by the content publisher. For example, the metadata information associated with audio/video podcasts generally consists of a URL link to the podcast, title, and a brief summary of its content. If this limited information fails to satisfy a search query, the search engine is not likely to provide the corresponding audio/video podcast as a search result even if the actual content of the audio/video podcast satisfies the query.

SUMMARY OF THE INVENTION

According to one aspect, the invention features an automated method and apparatus for generating metadata enhanced for audio, video or both ("audio/video") search-driven applications. The apparatus includes a media indexer that obtains an media file or stream ("media file/stream"), applies one or more automated media processing techniques to the media file/stream, combines the results of the media processing into metadata enhanced for audio/video search, and stores the enhanced metadata in a searchable index or other data repository. The media file/stream can be an audio/video podcast, for example. By generating or otherwise obtaining such enhanced metadata that identifies content segments and corresponding timing information from the underlying media content, a number of for audio/video search-driven applications can be implemented as described herein. The term "media" as referred to herein includes audio, video or both.

According to another aspect, the invention features a computerized method and apparatus for dynamic presentation of advertising, factual, informational content and combinations thereof (hereinafter referred to as "advertising content" generally). In particular, the advertising content is dynamically presented according to the playback of corresponding segments identified within a media file or stream.

According to one embodiment, the method and apparatus involves a client receiving media content and corresponding metadata for playback. The metadata identifies content segments and corresponding timing information derived from the media content using one or more media processing techniques. During playback of the media content, the client identifies the content segment in playback by comparing a playback status with the timing information from the metadata. Once the content segment is identified, the client presents a set of factual, informational, or advertising content associated with the content segment in playback.

In such embodiments, the method and apparatus can receive media content and corresponding metadata for playback, such that the metadata identifies content segments and corresponding timing information derived from the media content using one or more media processing techniques. During playback of the media content, the content segment in playback can be identified by comparing a playback status with the timing information from the metadata. Once the content segment is identified, a set of factual, informational, or advertising content associated with the content segment in playback is presented.

In such embodiment, the method and apparatus can provide an identification of the content segment in playback to a server; and receive the set of factual, informational, or advertising content associated with the content segment in playback from the server.

In such embodiments, the method and apparatus can receive a plurality of factual, informational, or advertising content from a server, provide an identification of the content segment in playback to the server, and receive a set of instructions or data from the server identifying the set of factual, informational, or advertising content from among the plurality of factual, informational, or advertising content for presentation.

In such embodiments, the method and apparatus can obtain a data map that associates a corresponding set of factual, informational, or advertising content with each of the content segments of the media content identified in the metadata. During playback of the media content, the content segment in playback is identified by comparing the playback status with the timing information from the metadata. Using the data map, the corresponding set of factual, informational, or advertising content associated with the content segment in playback is determined and presented concurrently or relative to the content segment in playback.

In such embodiment, the content segments can include word segments, audio speech segments, video segments and marker segments. For example, the content segments of the media content can correspond to a word, a phrase, a sentence, a paragraph, a story, or a topic. The content segments of the media content can also correspond to a speaker identified during the one or more media processing techniques.

According to another embodiment, the method and apparatus involves a server receiving obtaining metadata corresponding to media content in playback at a client. The metadata identifies content segments and corresponding timing information derived from the media content using one or more media processing techniques. During playback of the media content, the server receives a playback status of the media content from the client. The server identifies the current content segment in playback by comparing the

playback status with the timing information from the metadata and then directs the client to present a set of factual, informational, or advertising content associated with the content segment in playback.

In such embodiments, the method and apparatus can obtain a data map that associates a corresponding set of factual, informational, or advertising content with each of the content segments of the media content identified in the metadata; and use the data map to determine the corresponding set of factual, informational, or advertising content associated with the content segment in playback.

In such embodiments, the method and apparatus can direct the client to present the set by transmitting the set of factual, informational, or advertising content associated with the content segment in playback to the client for presentation.

In such embodiments, the method and apparatus can transmit a plurality of factual, informational, or advertising content from the server, and, subsequent to identifying the content segment in playback, direct the client to present the set of factual, informational or advertising content by providing the client with a set of instructions or data identifying the set from among the plurality of factual, informational, or advertising content for presentation.

In such embodiments, the content segments can include word segments, audio speech segments, video segments and marker segments. For example, the content segments of the media content can correspond to a word, a phrase, a sentence, a paragraph, a story, or a topic. The content segments of the media content can also correspond to a speaker identified during the one or more media processing techniques.

BRIEF DESCRIPTIONS OF THE DRAWINGS

The foregoing and other objects, features and advantages of the invention will be apparent from the following more particular description of preferred embodiments of the invention, as illustrated in the accompanying drawings in which like reference characters refer to the same parts throughout the different views. The drawings are not necessarily to scale, emphasis instead being placed upon illustrating the principles of the invention.

FIG. **1**A is a diagram illustrating an apparatus and method for generating metadata enhanced for audio/video search-driven applications.

FIG. **1**B is a diagram illustrating an example of a media indexer.

FIG. **2** is a diagram illustrating an example of metadata enhanced for audio/video search-driven applications.

FIG. **3** is a diagram illustrating an example of a search snippet that enables user-directed navigation of underlying media content.

FIGS. **4** and **5** are diagrams illustrating a computerized method and apparatus for generating search snippets that enable user navigation of the underlying media content.

FIG. **6**A is a diagram illustrating another example of a search snippet that enables user navigation of the underlying media content.

FIGS. **6**B and **6**C are diagrams illustrating a method for navigating media content using the search snippet of FIG. **6**A.

FIGS. **7**A-**7**C are diagrams that illustrate dynamic presentation of advertising content according to the playback of corresponding segments.

FIG. **8**A is a diagram illustrating an apparatus for presenting a set of factual, informational, or advertising content associated with the content segment in playback.

FIG. **8**B is a flow diagram illustrating a computerized method for dynamic presentation of a set of factual, informational, or advertising content associated with the content segment in playback.

FIG. **8**C is a flow diagram illustrating another computerized method for dynamic presentation of a set of factual, informational, or advertising content associated with the content segment in playback.

FIG. **8**D is a flow diagram illustrating another computerized method for dynamic presentation of a set of factual, informational, or advertising content associated with the content segment in playback.

FIG. **9**A is a diagram illustrating an apparatus for presenting a set of factual, informational, or advertising content associated with the content segment in playback.

FIG. **9**B is a flow diagram illustrating a computerized method for dynamic presentation of a set of factual, informational, or advertising content associated with the content segment in playback.

FIG. **9**C is a flow diagram illustrating another computerized method for dynamic presentation of a set of factual, informational, or advertising content associated with the content segment in playback.

DETAILED DESCRIPTION

Generation of Enhanced Metadata for Audio/Video

The invention features an automated method and apparatus for generating metadata enhanced for audio/video search-driven applications. The apparatus includes a media indexer that obtains an media file/stream (e.g., audio/video podcasts), applies one or more automated media processing techniques to the media file/stream, combines the results of the media processing into metadata enhanced for audio/video search, and stores the enhanced metadata in a searchable index or other data repository.

FIG. **1**A is a diagram illustrating an apparatus and method for generating metadata enhanced for audio/video search-driven applications. As shown, the media indexer **10** cooperates with a descriptor indexer **50** to generate the enhanced metadata **30**. A content descriptor **25** is received and processed by both the media indexer **10** and the descriptor indexer **50**. For example, if the content descriptor **25** is a Really Simple Syndication (RSS) document, the metadata **27** corresponding to one or more audio/video podcasts includes a title, summary, and location (e.g., URL link) for each podcast. The descriptor indexer **50** extracts the descriptor metadata **27** from the text and embedded metatags of the content descriptor **25** and outputs it to a combiner **60**. The content descriptor **25** can also be a simple web page link to a media file. The link can contain information in the text of the link that describes the file and can also include attributes in the HTML that describe the target media file.

In parallel, the media indexer **10** reads the metadata **27** from the content descriptor **25** and downloads the audio/video podcast **20** from the identified location. The media indexer **10** applies one or more automated media processing techniques to the downloaded podcast and outputs the combined results to the combiner **60**. At the combiner **60**, the metadata information from the media indexer **10** and the descriptor indexer **50** are combined in a predetermined format to form the enhanced metadata **30**. The enhanced metadata **30** is then stored in the index **40** accessible to search-driven applications such as those disclosed herein.

In other embodiments, the descriptor indexer **50** is optional and the enhanced metadata is generated by the media indexer **10**.

FIG. **1**B is a diagram illustrating an example of a media indexer. As shown, the media indexer **10** includes a bank of media processors **100** that are managed by a media indexing controller **110**. The media indexing controller **110** and each of the media processors **100** can be implemented, for example, using a suitably programmed or dedicated processor (e.g., a microprocessor or microcontroller), hardwired logic, Application Specific Integrated Circuit (ASIC), and a Programmable Logic Device (PLD) (e.g., Field Programmable Gate Array (FPGA)).

A content descriptor **25** is fed into the media indexing controller **110**, which allocates one or more appropriate media processors **100***a* . . . **100***n* to process the media files/streams **20** identified in the metadata **27**. Each of the assigned media processors **100** obtains the media file/stream (e.g., audio/video podcast) and applies a predefined set of audio or video processing routines to derive a portion of the enhanced metadata from the media content.

Examples of known media processors **100** include speech recognition processors **100***a*, natural language processors **100***b*, video frame analyzers **100***c*, non-speech audio analyzers **100***d*, marker extractors **100***e* and embedded metadata processors **100***f*. Other media processors known to those skilled in the art of audio and video analysis can also be implemented within the media indexer. The results of such media processing define timing boundaries of a number of content segment within a media file/stream, including timed word segments **105***a*, timed audio speech segments **105***b*, timed video segments **105***c*, timed non-speech audio segments **105***d*, timed marker segments **105***e*, as well as miscellaneous content attributes **105***f*, for example.

FIG. **2** is a diagram illustrating an example of metadata enhanced for audio/video search-driven applications. As shown, the enhanced metadata **200** include metadata **210** corresponding to the underlying media content generally. For example, where the underlying media content is an audio/video podcast, metadata **210** can include a URL **215***a*, title **215***b*, summary **215***c*, and miscellaneous content attributes **215***d*. Such information can be obtained from a content descriptor by the descriptor indexer **50**. An example of a content descriptor is a Really Simple Syndication (RSS) document that is descriptive of one or more audio/video podcasts. Alternatively, such information can be extracted by an embedded metadata processor **100***f* from header fields embedded within the media file/stream according to a predetermined format.

The enhanced metadata **200** further identifies individual segments of audio/video content and timing information that defines the boundaries of each segment within the media file/stream. For example, in FIG. **2**, the enhanced metadata **200** includes metadata that identifies a number of possible content segments within a typical media file/stream, namely word segments, audio speech segments, video segments, non-speech audio segments, and/or marker segments, for example.

The metadata **220** includes descriptive parameters for each of the timed word segments **225**, including a segment identifier **225***a*, the text of an individual word **225***b*, timing information defining the boundaries of that content segment (i.e., start offset **225***c*, end offset **225***d*, and/or duration **225***e*), and optionally a confidence score **225***f*. The segment identifier **225***a* uniquely identifies each word segment amongst the content segments identified within the metadata **200**. The text of the word segment **225***b* can be determined using a speech recognition processor **100***a* or parsed from closed caption data included with the media file/stream. The start offset **225***c* is an offset for indexing into the audio/video content to the beginning of the content segment. The end offset **225***d* is an offset for indexing into the audio/video content to the end of the content segment. The duration **225***e* indicates the duration of the content segment. The start offset, end offset and duration can each be represented as a timestamp, frame number or value corresponding to any other indexing scheme known to those skilled in the art. The confidence score **225***f* is a relative ranking (typically between 0 and 1) provided by the speech recognition processor **100***a* as to the accuracy of the recognized word.

The metadata **230** includes descriptive parameters for each of the timed audio speech segments **235**, including a segment identifier **235***a*, an audio speech segment type **235***b*, timing information defining the boundaries of the content segment (e.g., start offset **235***c*, end offset **235***d*, and/or duration **235***e*), and optionally a confidence score **235***f*. The segment identifier **235***a* uniquely identifies each audio speech segment amongst the content segments identified within the metadata **200**. The audio speech segment type **235***b* can be a numeric value or string that indicates whether the content segment includes audio corresponding to a phrase, a sentence, a paragraph, story or topic, particular gender, and/or an identified speaker. The audio speech segment type **235***b* and the corresponding timing information can be obtained using a natural language processor **100***b* capable of processing the timed word segments from the speech recognition processors **100***a* and/or the media file/stream **20** itself. The start offset **235***c* is an offset for indexing into the audio/video content to the beginning of the content segment. The end offset **235***d* is an offset for indexing into the audio/video content to the end of the content segment. The duration **235***e* indicates the duration of the content segment. The start offset, end offset and duration can each be represented as a timestamp, frame number or value corresponding to any other indexing scheme known to those skilled in the art. The confidence score **235***f* can be in the form of a statistical value (e.g., average, mean, variance, etc.) calculated from the individual confidence scores **225***f* of the individual word segments.

The metadata **240** includes descriptive parameters for each of the timed video segments **245**, including a segment identifier **225***a*, a video segment type **245***b*, and timing information defining the boundaries of the content segment (e.g., start offset **245***c*, end offset **245***d*, and/or duration **245***e*). The segment identifier **245***a* uniquely identifies each video segment amongst the content segments identified within the metadata **200**. The video segment type **245***b* can be a numeric value or string that indicates whether the content segment corresponds to video of an individual scene, watermark, recognized object, recognized face, or overlay text. The video segment type **245***b* and the corresponding timing information can be obtained using a video frame analyzer **100***c* capable of applying one or more image processing techniques. The start offset **235***c* is an offset for indexing into the audio/video content to the beginning of the content segment. The end offset **235***d* is an offset for indexing into the audio/video content to the end of the content segment. The duration **235***e* indicates the duration of the content segment. The start offset, end offset and duration can each be represented as a timestamp, frame number or value corresponding to any other indexing scheme known to those skilled in the art.

The metadata **250** includes descriptive parameters for each of the timed non-speech audio segments **255** include a

segment identifier **225***a*, a non-speech audio segment type **255***b*, and timing information defining the boundaries of the content segment (e.g., start offset **255***c*, end offset **255***d*, and/or duration **255***e*). The segment identifier **255***a* uniquely identifies each non-speech audio segment amongst the content segments identified within the metadata **200**. The audio segment type **235***b* can be a numeric value or string that indicates whether the content segment corresponds to audio of non-speech sounds, audio associated with a speaker emotion, audio within a range of volume levels, or sound gaps, for example. The non-speech audio segment type **255***b* and the corresponding timing information can be obtained using a non-speech audio analyzer **100***d*. The start offset **255***c* is an offset for indexing into the audio/video content to the beginning of the content segment. The end offset **255***d* is an offset for indexing into the audio/video content to the end of the content segment. The duration **255***e* indicates the duration of the content segment. The start offset, end offset and duration can each be represented as a timestamp, frame number or value corresponding to any other indexing scheme known to those skilled in the art.

The metadata **260** includes descriptive parameters for each of the timed marker segments **265**, including a segment identifier **265***a*, a marker segment type **265***b*, timing information defining the boundaries of the content segment (e.g., start offset **265***c*, end offset **265***d*, and/or duration **265***e*). The segment identifier **265***a* uniquely identifies each video segment amongst the content segments identified within the metadata **200**. The marker segment type **265***b* can be a numeric value or string that can indicates that the content segment corresponds to a predefined chapter or other marker within the media content (e.g., audio/video podcast). The marker segment type **265***b* and the corresponding timing information can be obtained using a marker extractor **100***e* to obtain metadata in the form of markers (e.g., chapters) that are embedded within the media content in a manner known to those skilled in the art.

By generating or otherwise obtaining such enhanced metadata that identifies content segments and corresponding timing information from the underlying media content, a number of for audio/video search-driven applications can be implemented as described herein.

Audio/Video Search Snippets

According to another aspect, the invention features a computerized method and apparatus for generating and presenting search snippets that enable user-directed navigation of the underlying audio/video content. The method involves obtaining metadata associated with discrete media content that satisfies a search query. The metadata identifies a number of content segments and corresponding timing information derived from the underlying media content using one or more automated media processing techniques. Using the timing information identified in the metadata, a search result or "snippet" can be generated that enables a user to arbitrarily select and commence playback of the underlying media content at any of the individual content segments.

FIG. **3** is a diagram illustrating an example of a search snippet that enables user-directed navigation of underlying media content. The search snippet **310** includes a text area **320** displaying the text **325** of the words spoken during one or more content segments of the underlying media content. A media player **330** capable of audio/video playback is embedded within the search snippet or alternatively executed in a separate window.

The text **325** for each word in the text area **320** is preferably mapped to a start offset of a corresponding word segment identified in the enhanced metadata. For example, an object (e.g. SPAN object) can be defined for each of the displayed words in the text area **320**. The object defines a start offset of the word segment and an event handler. Each start offset can be a timestamp or other indexing value that identifies the start of the corresponding word segment within the media content. Alternatively, the text **325** for a group of words can be mapped to the start offset of a common content segment that contains all of those words. Such content segments can include a audio speech segment, a video segment, or a marker segment, for example, as identified in the enhanced metadata of FIG. **2**.

Playback of the underlying media content occurs in response to the user selection of a word and begins at the start offset corresponding to the content segment mapped to the selected word or group of words. User selection can be facilitated, for example, by directing a graphical pointer over the text area **320** using a pointing device and actuating the pointing device once the pointer is positioned over the text **325** of a desired word. In response, the object event handler provides the media player **330** with a set of input parameters, including a link to the media file/stream and the corresponding start offset, and directs the player **330** to commence or otherwise continue playback of the underlying media content at the input start offset.

For example, referring to FIG. **3**, if a user clicks on the word **325***a*, the media player **330** begins to plays back the media content at the audio/video segment starting with "state of the union address . . ." Likewise, if the user clicks on the word **325***b*, the media player **330** commences playback of the audio/video segment starting with "bush outlined . . . "

An advantage of this aspect of the invention is that a user can read the text of the underlying audio/video content displayed by the search snippet and then actively "jump to" a desired segment of the media content for audio/video playback without having to listen to or view the entire media stream.

FIGS. **4** and **5** are diagrams illustrating a computerized method and apparatus for generating search snippets that enable user navigation of the underlying media content. Referring to FIG. **4**, a client **410** interfaces with a search engine module **420** for searching an index **430** for desired audio/video content. The index includes a plurality of metadata associated with a number of discrete media content and enhanced for audio/video search as shown and described with reference to FIG. **2**. The search engine module **420** also interfaces with a snippet generator module **440** that processes metadata satisfying a search query to generate the navigable search snippet for audio/video content for the client **410**. Each of these modules can be implemented, for example, using a suitably programmed or dedicated processor (e.g., a microprocessor or microcontroller), hardwired logic, Application Specific Integrated Circuit (ASIC), and a Programmable Logic Device (PLD) (e.g., Field Programmable Gate Array (FPGA)).

FIG. **5** is a flow diagram illustrating a computerized method for generating search snippets that enable user-directed navigation of the underlying audio/video content. At step **510**, the search engine **420** conducts a keyword search of the index **430** for a set of enhanced metadata documents satisfying the search query. At step **515**, the search engine **420** obtains the enhanced metadata documents descriptive of one or more discrete media files/streams (e.g., audio/video podcasts).

At step **520**, the snippet generator **440** obtains an enhanced metadata document corresponding to the first

media file/stream in the set. As previously discussed with respect to FIG. **2**, the enhanced metadata identifies content segments and corresponding timing information defining the boundaries of each segment within the media file/stream.

At step **525**, the snippet generator **440** reads or parses the enhanced metadata document to obtain information on each of the content segments identified within the media file/stream. For each content segment, the information obtained preferably includes the location of the underlying media content (e.g. URL), a segment identifier, a segment type, a start offset, an end offset (or duration), the word or the group of words spoken during that segment, if any, and an optional confidence score.

Step **530** is an optional step in which the snippet generator **440** makes a determination as to whether the information obtained from the enhanced metadata is sufficiently accurate to warrant further search and/or presentation as a valid search snippet. For example, as shown in FIG. **2**, each of the word segments **225** includes a confidence score **225***f* assigned by the speech recognition processor **100***a*. Each confidence score is a relative ranking (typically between 0 and 1) as to the accuracy of the recognized text of the word segment. To determine an overall confidence score for the enhanced metadata document in its entirety, a statistical value (e.g., average, mean, variance, etc.) can be calculated from the individual confidence scores of all the word segments **225**.

Thus, if, at step **530**, the overall confidence score falls below a predetermined threshold, the enhanced metadata document can be deemed unacceptable from which to present any search snippet of the underlying media content. Thus, the process continues at steps **535** and **525** to obtain and read/parse the enhanced metadata document corresponding to the next media file/stream identified in the search at step **510**. Conversely, if the confidence score for the enhanced metadata in its entirety equals or exceeds the predetermined threshold, the process continues at step **540**.

At step **540**, the snippet generator **440** determines a segment type preference. The segment type preference indicates which types of content segments to search and present as snippets. The segment type preference can include a numeric value or string corresponding to one or more of the segment types. For example, if the segment type preference can be defined to be one of the audio speech segment types, e.g., "story," the enhanced metadata is searched on a story-by-story basis for a match to the search query and the resulting snippets are also presented on a story-by-story basis. In other words, each of the content segments identified in the metadata as type "story" are individually searched for a match to the search query and also presented in a separate search snippet if a match is found. Likewise, the segment type preference can alternatively be defined to be one of the video segment types, e.g., individual scene. The segment type preference can be fixed programmatically or user configurable.

At step **545**, the snippet generator **440** obtains the metadata information corresponding to a first content segment of the preferred segment type (e.g., the first story segment). The metadata information for the content segment preferably includes the location of the underlying media file/stream, a segment identifier, the preferred segment type, a start offset, an end offset (or duration) and an optional confidence score. The start offset and the end offset/duration define the timing boundaries of the content segment. By referencing the enhanced metadata, the text of words spoken during that segment, if any, can be determined by identifying each of the word segments falling within the start and end offsets. For example, if the underlying media content is an audio/video podcast of a news program and the segment preference is "story," the metadata information for the first content segment includes the text of the word segments spoken during the first news story.

Step **550** is an optional step in which the snippet generator **440** makes a determination as to whether the metadata information for the content segment is sufficiently accurate to warrant further search and/or presentation as a valid search snippet. This step is similar to step **530** except that the confidence score is a statistical value (e.g., average, mean, variance, etc.) calculated from the individual confidence scores of the word segments **225** falling within the timing boundaries of the content segment.

If the confidence score falls below a predetermined threshold, the process continues at step **555** to obtain the metadata information corresponding to a next content segment of the preferred segment type. If there are no more content segments of the preferred segment type, the process continues at step **535** to obtain the enhanced metadata document corresponding to the next media file/stream identified in the search at step **510**. Conversely, if the confidence score of the metadata information for the content segment equals or exceeds the predetermined threshold, the process continues at step **560**.

At step **560**, the snippet generator **440** compares the text of the words spoken during the selected content segment, if any, to the keyword(s) of the search query. If the text derived from the content segment does not contain a match to the keyword search query, the metadata information for that segment is discarded. Otherwise, the process continues at optional step **565**.

At optional step **565**, the snippet generator **440** trims the text of the content segment (as determined at step **545**) to fit within the boundaries of the display area (e.g., text area **320** of FIG. **3**). According to one embodiment, the text can be trimmed by locating the word(s) matching the search query and limiting the number of additional words before and after. According to another embodiment, the text can be trimmed by locating the word(s) matching the search query, identifying another content segment that has a duration shorter than the segment type preference and contains the matching word(s), and limiting the displayed text of the search snippet to that of the content segment of shorter duration. For example, assuming that the segment type preference is of type "story," the displayed text of the search snippet can be limited to that of segment type "sentence" or "paragraph".

At optional step **575**, the snippet generator **440** filters the text of individual words from the search snippet according to their confidence scores. For example, in FIG. **2**, a confidence score **225***f* is assigned to each of the word segments to represent a relative ranking that corresponds to the accuracy of the text of the recognized word. For each word in the text of the content segment, the confidence score from the corresponding word segment **225** is compared against a predetermined threshold value. If the confidence score for a word segment falls below the threshold, the text for that word segment is replaced with a predefined symbol (e.g., ---). Otherwise no change is made to the text for that word segment.

At step **580**, the snippet generator **440** adds the resulting metadata information for the content segment to a search result for the underlying media stream/file. Each enhanced metadata document that is returned from the search engine can have zero, one or more content segments containing a match to the search query. Thus, the corresponding search result associated with the media file/stream can also have

zero, one or more search snippets associated with it. An example of a search result that includes no search snippets occurs when the metadata of the original content descriptor contains the search term, but the timed word segments **105***a* of FIG. **2** do not.

The process returns to step **555** to obtain the metadata information corresponding to the next content snippet segment of the preferred segment type. If there are no more content segments of the preferred segment type, the process continues at step **535** to obtain the enhanced metadata document corresponding to the next media file/stream identified in the search at step **510**. If there are no further metadata results to process, the process continues at optional step **582** to rank the search results before sending to the client **410**.

At optional step **582**, the snippet generator **440** ranks and sorts the list of search results. One factor for determining the rank of the search results can include confidence scores. For example, the search results can be ranked by calculating the sum, average or other statistical value from the confidence scores of the constituent search snippets for each search result and then ranking and sorting accordingly. Search results being associated with higher confidence scores can be ranked and thus sorted higher than search results associated with lower confidence scores. Other factors for ranking search results can include the publication date associated with the underlying media content and the number of snippets in each of the search results that contain the search term or terms. Any number of other criteria for ranking search results known to those skilled in the art can also be utilized in ranking the search results for audio/video content.

At step **585**, the search results can be returned in a number of different ways. According to one embodiment, the snippet generator **440** can generate a set of instructions for rendering each of the constituent search snippets of the search result as shown in FIG. **3**, for example, from the raw metadata information for each of the identified content segments. Once the instructions are generated, they can be provided to the search engine **420** for forwarding to the client. If a search result includes a long list of snippets, the client can display the search result such that a few of the snippets are displayed along with an indicator that can be selected to show the entire set of snippets for that search result.

Although not so limited, such a client includes (i) a browser application that is capable of presenting graphical search query forms and resulting pages of search snippets; (ii) a desktop or portable application capable of, or otherwise modified for, subscribing to a service and receiving alerts containing embedded search snippets (e.g., RSS reader applications); or (iii) a search applet embedded within a DVD (Digital Video Disc) that allows users to search a remote or local index to locate and navigate segments of the DVD audio/video content.

According to another embodiment, the metadata information contained within the list of search results in a raw data format are forwarded directly to the client **410** or indirectly to the client **410** via the search engine **420**. The raw metadata information can include any combination of the parameters including a segment identifier, the location of the underlying content (e.g., URL or filename), segment type, the text of the word or group of words spoken during that segment (if any), timing information (e.g., start offset, end offset, and/or duration) and a confidence score (if any). Such information can then be stored or further processed by the client **410** according to application specific requirements. For example, a client desktop application, such as iTunes Music Store available from Apple Computer, Inc., can be modified to process the raw metadata information to generate its own proprietary user interface for enabling user-directed navigation of media content, including audio/video podcasts, resulting from a search of its Music Store repository.

FIG. **6**A is a diagram illustrating another example of a search snippet that enables user navigation of the underlying media content. The search snippet **610** is similar to the snippet described with respect to FIG. **3**, and additionally includes a user actuated display element **640** that serves as a navigational control. The navigational control **640** enables a user to control playback of the underlying media content. The text area **620** is optional for displaying the text **625** of the words spoken during one or more segments of the underlying media content as previously discussed with respect to FIG. **3**.

Typical fast forward and fast reverse functions cause media players to jump ahead or jump back during media playback in fixed time increments. In contrast, the navigational control **640** enables a user to jump from one content segment to another segment using the timing information of individual content segments identified in the enhanced metadata. As shown in FIG. **6**A, the user-actuated display element **640** can include a number of navigational controls (e.g., Back **642**, Forward **648**, Play **644**, and Pause **646**). The Back **642** and Forward **648** controls can be configured to enable a user to jump between word segments, audio speech segments, video segments, non-speech audio segments, and marker segments. For example, if an audio/video podcast includes several content segments corresponding to different stories or topics, the user can easily skip such segments until the desired story or topic segment is reached.

FIGS. **6**B and **6**C are diagrams illustrating a method for navigating media content using the search snippet of FIG. **6**A. At step **710**, the client presents the search snippet of FIG. **6**A, for example, that includes the user actuated display element **640**. The user-actuated display element **640** includes a number of individual navigational controls (i.e., Back **642**, Forward **648**, Play **644**, and Pause **646**). Each of the navigational controls **642**, **644**, **646**, **648** is associated with an object defining at least one event handler that is responsive to user actuations. For example, when a user clicks on the Play control **644**, the object event handler provides the media player **630** with a link to the media file/stream and directs the player **630** to initiate playback of the media content from the beginning of the file/stream or from the most recent playback offset.

At step **720**, in response to an indication of user actuation of Forward **648** and Back **642** display elements, a playback offset associated with the underlying media content in playback is determined. The playback offset can be a timestamp or other indexing value that varies according to the content segment presently in playback. This playback offset can be determined by polling the media player or by autonomously tracking the playback time.

For example, as shown in FIG. **6**C, when the navigational event handler **850** is triggered by user actuation of the Forward **648** or Back **642** control elements, the playback state of media player module **830** is determined from the identity of the media file/stream presently in playback (e.g., URL or filename), if any, and the playback timing offset. Determination of the playback state can be accomplished by a sequence of status request/response **855** signaling to and from the media player module **830**. Alternatively, a background media playback state tracker module **860** can be executed that keeps track of the identity of the media file in playback and maintains a playback clock (not shown) that tracks the relative playback timing offsets.

At step **730** of FIG. **6**B, the playback offset is compared with the timing information corresponding to each of the content segments of the underlying media content to determine which of the content segments is presently in playback. As shown in FIG. **6**C, once the media file/stream and playback timing offset are determined, the navigational event handler **850** references a segment list **870** that identifies each of the content segments in the media file/stream and the corresponding timing offset of that segment. As shown, the segment list **870** includes a segment list **872** corresponding to a set of timed audio speech segments (e.g., topics). For example, if the media file/stream is an audio/video podcast of an episode of a daily news program, the segment list **872** can include a number of entries corresponding to the various topics discussed during that episode (e.g., news, weather, sports, entertainment, etc.) and the time offsets corresponding to the start of each topic. The segment list **870** can also include a video segment list **874** or other lists (not shown) corresponding to timed word segments, timed non-speech audio segments, and timed marker segments, for example. The segment lists **870** can be derived from the enhanced metadata or can be the enhanced metadata itself.

At step **740** of FIG. **6**B, the underlying media content is played back at an offset that is prior to or subsequent to the offset of the content segment presently in playback. For example, referring to FIG. **6**C, the event handler **850** compares the playback timing offset to the set of predetermined timing offsets in one or more of the segment lists **870** to determine which of the content segments to playback next. For example, if the user clicked on the "forward" control **848**, the event handler **850** obtains the timing offset for the content segment that is greater in time than the present playback offset. Conversely, if the user clicks on the "backward" control **842**, the event handler **850** obtains the timing offset for the content segment that is earlier in time than the present playback offset. After determining the timing offset of the next segment to play, the event handler **850** provides the media player module **830** with instructions **880** directing playback of the media content at the next playback state (e.g., segment offset and/or URL).

Thus, an advantage of this aspect of the invention is that a user can control media using a client that is capable of jumping from one content segment to another segment using the timing information of individual content segments identified in the enhanced metadata. One particular application of this technology can be applied to portable player devices, such as the iPod audio/video player available from Apple Computer, Inc. For example, after downloading a podcast to the iPod, it is unacceptable for a user to have to listen to or view an entire podcast if he/she is only interested in a few segments of the content. Rather, by modifying the internal operating system software of iPod, the control buttons on the front panel of the iPod can be used to jump from one segment to the next segment of the podcast in a manner similar to that previously described.

Timed Based Placement of Advertising Content

According to another aspect, the invention features a computerized method and apparatus for dynamic presentation of advertising, factual, informational content and combinations thereof (hereinafter referred to as "advertising content" generally) using shifting content in a multimedia file to drive advertising placement. In particular embodiments, the advertising content is dynamically presented according to the playback of corresponding segments identified within a media file or stream. For example, particular embodiments can incorporate metadata with timing information so that keywords can be associated with specific times or time ranges within a media file or stream. These words can be associated with advertisements, or the words could be used to assess the topic of a segment of the media file, and these topics can be associated with advertisements.

The advertising content can be placed around the frame of the video, if viewing on a computer screen. The advertisements can be placed on the small screen of a portable device such as an iPod. The advertisements can rotate with time, and be selected based on the keywords in a timed locality of the key timed words. Natural Language Processing (NLP) techniques, for example, can be used to determine the proper segmentation of the audio/video/multimedia files. Video clues, such as scene changes, words on the screen, can also be used to determine the proper segmentation of the source files, as can audio clues, such as pauses, bylines, laughter, or applause. The advertising content can be confined to the segment so determined, or follow a short time after the segment.

In addition, the keywords can be used to generate a timed index of ads, or be submitted at the proper time to another system which returns an ad. Clicking on an advertisement or advertisement text can open another window with more information. If the media are transferred to a portable device, such as an iPod, advertising content in the form of text/images/sounds/video can also be transferred. The screen of the portable device can be used to display such advertising content. Semi-transparent icons can overlay a portion of video content to indicate the availability of additional content, such as advertisements, information or facts. User action while the icon is present, such as pressing a button on the portable device or another remote control may interrupt the current playback of the underlying media file/stream to switch to an advertisement. User input can be taken any time that advertising content is displayed; information on which advertising content are clicked can be transferred to a computer next time the portable device is synchronized/updated. Advertising content in the form of text can overlay on top of video or scrolled at the bottom of the video.

FIGS. **7**A-**7**C are diagrams that illustrate dynamic presentation of advertising content according to the playback of corresponding segments. For purposes of example only, the diagram of FIG. **7**A illustrates a graphical user interface **610** that is similar to the search snippet of FIG. **6**A. The snippet or other graphical user interface **610** includes a media player **630** capable of audio/video playback and a user actuated display element **640** that serves as a navigational control. Advertising content **900***a*, factual content **900***b* and informational content **900***c* (advertising content **900**, generally) are shown positioned about the media player **630**. The advertising content can also overlay video content, for example, at fixed positions **900***d* or scrolling across a portion of the video **900***e*.

The navigational control **640** enables a user to control playback of the underlying media content. For example, as previously discussed with respect to FIGS. **6**A-**6**C, the user-actuated display element **640** can include a number of navigational controls (e.g . . . , Back **642**, Forward **648**, Play **644**, and Pause **646**). The Back **642** and Forward **648** controls can be configured to enable a user to jump between word segments, audio speech segments, video segments, non-speech audio segments, and marker segments. The configuration can be accomplished in one embodiment by a drop down menu which has multiple selections which describe different methods of skipping such as by time, by word, by story, or by topic, for which the selected menu item configures the navigation controls. In another embodiment

of the controls, a context menu could be displayed when a navigation control receives a right-click, the context menu may have entries to jump in time, over words, over sentences, or over stories. For example, if an audio/video podcast includes several content segments corresponding to different stories or topics, the user can easily skip forward and back among such segments until the desired story or topic segment is reached. According to embodiments of the computerized method and apparatus for dynamic presentation of advertising content, different sets of advertising content **900** can be dynamically presented according to which of the content segments is presently in playback as shown in FIGS. **7**B and **7**C.

FIG. **7**B is a timing diagram illustrating playback of an exemplary media file or stream. In particular, FIG. **7**B illustrates the audio/video content segments (**902***a*, **902***b* , . . . **902***l*) identified within a media file or stream **902** using the enhanced metadata of FIG. **2**. In this example, the media file/stream **902** is an audio or video podcast of a typical news program. The enhanced metadata identifies a number of topic and story segments using, for example, speech recognition processor **100***a* and a natural language processor **100***b*. As shown, the topic segments include local news, business, entertainment, and sports. Each content segment corresponding to a topic further includes a number of constituent story segments. For example, the content segments that constitute the topic segments "sports" may include story segments about the Boston Red Sox **902***j*, Boston Celtics **902***k* and New England Patriots **902***l*, respectively.

Although the media file or stream **902** can be played back linearly from time T_0 to the end of the file or stream, the media file/stream **902** can also be played back in an arbitrary manner as shown in FIG. **7**B. For example, since the navigational control **640** enables a user to jump from one topic segment to another, a user can direct the media player **630** to playback the first news story segment **902***a* of the "local" segment and then jump to the first story segment **902***d* of the "business" segment. Preferably, the advertising content **900** is presented in a manner such that it relates to the topic, story, scene or other characteristic of the content segment in playback. For example, during playback of the story segment **902***j* regarding the Boston Red Sox, the advertising content can include advertisements on tickets, facts including team statistics from the prior year, and schedule information for the upcoming season. In order that the advertising content consistently relates to the content segments during such arbitrary playback of the media file or stream, an association is made between the advertising content and each of the content segments regardless of whether media playback is linear or arbitrary.

For example, FIG. **7**C is a diagram illustrating a data map **904** that associates advertising content with each of the content segments. As shown, the data map **904** associates a segment identifier **904***a* and its corresponding start and end offsets (or duration) **904***b*, **904***c* with a combination of advertising content identifiers **904***d*, **904***e*, and **904***f*. The advertising content identifiers **904***d*, **904***e*, and **904***f* are used to select the actual advertising content stored in a corresponding data repository. Thus, with each transition from one content segment to another, an appropriate set of advertising, factual and information content can be presented that is related to the topics, stories, scenes or other segment characteristics of the underlying media content.

According to a first embodiment, the method and apparatus involves a client receiving media content and corresponding metadata for playback. The metadata identifies content segments and corresponding timing information derived from the media content using one or more media processing techniques. During playback of the media content, the client identifies the content segment in playback by comparing a playback status with the timing information from the metadata. Once the content segment is identified, the client presents a set of factual, informational, or advertising content associated with the content segment in playback.

For example, FIG. **8**A is a diagram illustrating an apparatus for presenting a set of factual, informational, or advertising content associated with the content segment in playback. As shown, FIG. **8**A includes a number of repositories for storing audio/video content **906**, enhanced metadata **908**, and advertising content **910** (e.g., advertisements, facts and information). Such advertising content **910** can be in the form of audio, video, text, graphics or combinations thereof. The apparatus further includes a relevancy engine **912** that interfaces with an advertising engine **914** to generate the data map **904** of FIG. **7**C. An agent **924** for timed placement of advertising content determines the advertising content, namely advertisements **922***a*, facts **922***b* and information **922***c*, to present via a display module **918** as discussed below. The relevancy engine **912**, advertising engine **914** and placement agent **924** each can be implemented, for example, using a suitably programmed or dedicated processor (e.g., a microprocessor or microcontroller), hardwired logic, Application Specific Integrated Circuit (ASIC), and a Programmable Logic Device (PLD) (e.g., Field Programmable Gate Array (FPGA)).

FIG. **8**B is a flow diagram illustrating a computerized method for dynamic presentation of a set of factual, informational, or advertising content associated with the content segment in playback. The placement agent keeps track of the playback status of a selected media file or stream. When the agent detects a transition from one content segment to another, it communicates with the advertising engine requesting the next set of advertising content to present via the display module.

At step **940**, the advertising engine **914** obtains the data map **904** that maps timed content segments with corresponding advertising content as shown in FIG. **7**C. The data map **904** can be generated with cooperation of the relevancy engine **912** and the advertising engine **914**.

For example, as shown in FIG. **8**A, the relevancy engine **912** receives the enhanced metadata of FIG. **2** corresponding to the media file/stream selected for presentation by the media player **920**. The relevancy engine may also receive user data **911** that is specific to the user of the system. The relevancy engine **912** processes the enhanced metadata and identifies each of the word segments **220** of FIG. **2** that are deemed to be relevant. Relevancy can be determined by directing the relevancy engine **912** to compare each of the word segments **220** against a predetermined set of key words. The relevancy engine **912** forwards information for each of the relevant word segments (e.g., segment identifier **225***a*, word **225***b*, start offset **225***c*, end offset **225***d* and/or duration **225***e*) to the advertising engine **914**. The advertising engine **914** then associates each of the relevant word segments to advertising content identifiers mapped to those key words, resulting in the data map of FIG. **7**C.

At step **942**, the audio/video content **906** is downloaded to the media player **920** for presentation via the display module **918**, such as a desktop or portable device. In addition, the enhanced metadata **908** corresponding to the audio/video content **906** is downloaded to the placement agent **924**.

Alternatively, a segment list **916** that is derived from the enhanced metadata **908** can be downloaded to the placement agent **924**. The segment list **916** identifies each of the content segments containing the relevant key words by segment identifier, start offset and end offset.

At step **944**, the media player **920** starts playback of the audio/video content from the media file/stream. At step **946**, the placement agent **924** tracks the playback status of the media file/stream using the enhanced metadata **908** or segment list **916**. According to one embodiment, the playback status is tracked by the placement agent **924** polling the media player **920** for the playback status information, including the identity of the media file/stream and current playback timing offset. Alternatively, the placement agent **924** keeps track of the identity of the media file in playback and maintains a playback clock that tracks the playback timing offset (e.g., in seconds).

At step **948**, the placement agent **924** continues to track the playback status until it detects a transition from a previous content segment (including no previous segment) to a current content segment. For example, with respect to FIG. **7**B, a segment transition is detected when the playback timing offset crosses timing offset T_{10} which divides the Red Sox story segment **902***j* and the New England Patriots story segment **902***k*. In particular, the playback offset is compared with the timing information of the enhanced metadata **908** or segment list **916** to determine which of the content segments is presently in playback. At step **950**, the placement agent **924** communicates with the advertising engine **914** to notify the engine of the transition by providing the current segment identifier. In response, at step **952**, the advertising engine **914** references the data map **904** of FIG. **7**C to determine the next set of advertising content to present with respect to playback of the current content segment.

At step **954**, the advertising engine accesses the advertising content **910** from a repository using the advertising content identifiers **904***d*, **904***e*, **904***f* determined from the data map **904** of FIG. **7**C and then downloads such advertising content to the placement agent **924**. The placement agent **924**, in turn, loads the selected advertising content into corresponding display objects **922** (e.g., windows, frames, scrolling text, etc.) of the display module **918** for presentation at step **956**.

FIG. **8**C is a flow diagram illustrating another computerized method for dynamic presentation of a set of factual, informational, or advertising content associated with the content segment in playback. The advertising engine downloads a set of advertising content available for dynamic presentation along with the media file or stream selected for playback. The placement agent keeps track of the playback status of the media file or stream. When the agent detects a transition from one content segment to another, it communicates with the advertising engine requesting an indication of which of the downloaded advertising content to present via the display module.

At step **960**, the advertising engine **914** obtains the data map **904** that maps timed content segments with corresponding advertising content as shown in FIG. **7**C and previously discussed with respect to FIG. **8**B. At step **962**, the audio/video content **906** selected for playback is downloaded to the media player **920** for presentation via the display module **918**, such as a desktop or portable device, and the advertising engine **914** downloads a set of advertising content to the placement agent **924**. The enhanced metadata **908** corresponding to the audio/video content **906** is also downloaded to the placement agent **924**. Alternatively, a segment list **916** that is derived from the enhanced metadata **908** can be downloaded to the placement agent **924**. The segment list **916** identifies each of the content segments containing the relevant key words by segment identifier, start offset and end offset.

At step **964**, the media player **920** starts playback of the audio/video content from the media file/stream. At step **966**, the placement agent **924** tracks the playback status of the media file/stream using the enhanced metadata **908** or segment list **916**. According to one embodiment, the playback status is tracked by the placement agent **924** polling the media player **920** for the playback status information, including the identity of the media file/stream and current playback timing offset. Alternatively, the placement agent **924** keeps track of the identity of the media file in playback and maintains a playback clock that tracks the playback timing offset (e.g., in seconds).

At step **968**, the placement agent **924** continues to track the playback status until it detects a transition from a previous content segment (including no previous segment) to a current content segment. In particular, the playback offset is compared with the timing information of the enhanced metadata **908** or segment list **916** to determine which of the content segments is presently in playback. At step **970**, the placement agent **924** communicates with the advertising engine **914** to notify the engine of the transition by providing the current segment identifier. In response, at step **972**, the advertising engine **914** references the data map **904** of FIG. **7**C to determine the next set of advertising content to present with respect to playback of the current content segment.

At step **974**, the advertising engine **914** downloads the advertising content identifiers **904***d*, **904***e*, **904***f* determined from the data map **904** of FIG. **7**C that correspond to the next set of advertising content to present. At step **976**, the placement agent **924** uses the advertising content identifiers **904***d*, **904***e*, and **904***f* to select the corresponding advertising content from the available set of advertising content previously downloaded. The placement agent **924** then loads the selected advertising content into corresponding display objects **922** (e.g., windows, frames, scrolling text, etc.) of the display module **918** for presentation.

FIG. **8**D is a flow diagram illustrating another computerized method for dynamic presentation of a set of factual, informational, or advertising content associated with the content segment in playback. The advertising engine downloads a set of advertising content available for dynamic presentation and the data map along with the media file or stream selected for playback. The data map is a data structure maps timed content segments with corresponding advertising content. The placement agent keeps track of the playback status of the media file or stream. When the agent detects a transition from one content segment to another, it references the data map to determine which of the downloaded advertising content to present via the display module.

At step **980**, the advertising engine **914** obtains the data map **904** that maps timed content segments with corresponding advertising content as shown in FIG. **7**C and previously discussed with respect to FIG. **8**B. At step **982**, the audio/video content **906** and advertising content **910** are downloaded to for presentation via the display module **918**, such as a desktop or portable device. In addition, the data map **904** and enhanced metadata **908** corresponding to the audio/video content **906** are downloaded to the placement agent **924**. Alternatively, the data map **904** and a segment list **916** that is derived from the enhanced metadata **908** can be downloaded to the placement agent **924**. The segment list

916 identifies each of the content segments containing the relevant key words by segment identifier, start offset and end offset.

At step **984**, the media player **920** starts playback of the audio/video content from the media file/stream. At step **986**, the placement agent **924** tracks the playback status of the media file/stream using the enhanced metadata **908** or segment list **916**. According to one embodiment, the playback status is tracked by the placement agent **924** polling the media player **920** for the playback status information, including the identity of the media file/stream and current playback timing offset. Alternatively, the placement agent **924** keeps track of the identity of the media file in playback and maintains a playback clock that tracks the playback timing offset (e.g., in seconds).

At step **988**, the placement agent **924** continues to track the playback status until it detects a transition from a previous content segment (including no previous segment) to a current content segment. In particular, the playback offset is compared with the timing information of the enhanced metadata **908** or segment list **916** to determine which of the content segments is presently in playback. At step **990**, once a segment transition is detected, the placement agent **924** references the data map **904** of FIG. **7**C. The placement agent **924** uses the current segment identifier to index into the data map **904** and determine the advertising content identifiers **904***d*, **904***e*, and **904***f* for the next set of advertising content to present.

At step **992**, the placement agent **924** uses the advertising content identifiers **904***d*, **904***e*, and **904***f* to select the corresponding advertising content from the available set of advertising content previously downloaded. The placement agent **924**, in turn, loads the selected advertising content into corresponding display objects **922** (e.g., windows, frames, scrolling text, etc.) of the display module **918** for presentation.

According to a second embodiment, the method and apparatus involves a server receiving obtaining metadata corresponding to media content in playback at a client. The metadata identifies content segments and corresponding timing information derived from the media content using one or more media processing techniques. During playback of the media content, the server receives a playback status of the media content from the client. The server identifies the current content segment in playback by comparing the playback status with the timing information from the metadata and then directs the client to present a set of factual, informational, or advertising content associated with the content segment in playback.

For example, FIG. **9**A is a diagram illustrating an apparatus for presenting a set of factual, informational, or advertising content associated with the content segment in playback. As shown, FIG. **9**A includes a number of repositories for storing audio/video content **906**, enhanced metadata **908**, and advertising content **910** (e.g., advertisements, facts and information). Such advertising content **910** can be in the form of audio, video, text, graphics or combinations thereof. The apparatus further includes a relevancy engine **912** that interfaces with an advertising engine **914** and user data **911** to generate the data map **904** of FIG. **7**C. An agent **924** for timed placement of advertising content determines the advertising content, namely advertisements **922***a*, facts **922***b* and information **922***c*, to present via a display module **918** as discussed below. For example, if the content is determined to be about computer games, and the user data **911** contains the age and the type of computer that the user owns (such as a Mac), the advertising content may be specific to the age group of the user and be limited to games only for the Mac. The relevancy engine **912**, advertising engine **914** and placement agent **924** each can be implemented, for example, using a suitably programmed or dedicated processor (e.g., a microprocessor or microcontroller), hardwired logic, Application Specific Integrated Circuit (ASIC), and a Programmable Logic Device (PLD) (e.g., Field Programmable Gate Array (FPGA)).

FIG. **9**B is a flow diagram illustrating a computerized method for dynamic presentation of a set of factual, informational, or advertising content associated with the content segment in playback. The advertising engine keeps track of the playback status of a media file or stream. When the advertising engine detects a transition from one content segment to another, it communicates with the placement agent to download the next set of advertising content to present via the display module.

At step **1000**, the advertising engine **914** obtains the data map **904** that maps timed content segments with corresponding advertising content as shown in FIG. **7**C. The data map **904** can be generated with cooperation of the relevancy engine **912** and the advertising engine **914** as previously discussed with respect to FIG. **8**A. At step **1002**, the audio/video content **906** is downloaded to the media player **920** for presentation via the display module **918**, such as a desktop or portable device. At step **1004**, the media player **920** starts playback of the audio/video content from the media file/stream.

At step **1006**, the advertising engine **914** tracks the playback status using the enhanced metadata **908** or data map **904** and playback status indicators received from the placement agent **924** (e.g. playback timing offsets). The playback status indicators received from the placement agent **924** can be determined by polling the media player **920** for the playback status information, including the identity of the media file/stream and current playback timing offset. Alternatively, the playback status indicators received from the placement agent **924** can be determined by the agent keeping track of the identity of the media file in playback and maintaining a playback clock that tracks the playback timing offset (e.g., in seconds). Using the playback status indicators from the placement agent **924**, the advertising engine **914** then references either the enhanced metadata **908** or data map **904** to determine which of the content segments is currently in playback.

At step **1008**, the advertising engine **914** continues to track the playback status until it detects a transition from a previous content segment (including no previous segment) to a current content segment. For example, with respect to FIG. **7**B, a segment transition is detected when the playback timing offset crosses timing offset T**10** which divides the Red Sox story segment **902***j* and the New England Patriots story segment **902***k*. In particular, the playback offset is compared with the timing information of the enhanced metadata **908** or data map **904** to determine which of the content segments is presently in playback. At step **1010**, once a segment transition has been detected, the advertising engine **914** references the data map **904** of FIG. **7**C to determine the next set of advertising content to present based on the identifier of the current content segment in playback.

At step **1012**, the advertising engine accesses the advertising content **910** from a repository using the advertising content identifiers **904***d*, **904***e*, **904***f* determined from the data map **904** of FIG. **7**C and then downloads such advertising content to the placement agent **924**. The placement agent **924**, in turn, loads the selected advertising content into

corresponding display objects **922** (e.g., windows, frames, scrolling text, etc.) of the display module **918** by the placement agent **924** for presentation at step **1014**.

FIG. **9**C is a flow diagram illustrating another computerized method for dynamic presentation of a set of factual, informational, or advertising content associated with the content segment in playback. The advertising engine downloads a set of advertising content available for dynamic presentation along with the media file or stream selected for playback. The advertising engine **914** keeps track of the playback status of a media file or stream. When the advertising engine **9124** detects a transition from one content segment to another, it communicates with the placement agent **924** to identify the next set of advertising content to present via the display module **918**.

At step **1100**, the advertising engine **914** obtains the data map **904** that maps timed content segments with corresponding advertising content as shown in FIG. **7**C and the enhanced metadata **908** corresponding to the media file/stream selected for playback. The data map **904** can be generated with cooperation of the relevancy engine **912** and the advertising engine **914** as previously discussed with respect to FIG. **8**A. At step **1102**, the audio/video content **906** is downloaded to the media player **920** for presentation via the display module **918**, such as a desktop or portable device, and the advertising engine **914** downloads a set of advertising content to the placement agent **924**. At step **1104**, the media player **920** starts playback of the audio/video content from the media file/stream.

At step **1106**, the advertising engine **914** tracks the playback status using the enhanced metadata **908** or data map **904** and playback status indicators received from the placement agent **924** (e.g. playback timing offsets). The playback status indicators received from the placement agent **924** can be determined by polling the media player **920** for the playback status information, including the identity of the media file/stream and current playback timing offset. Alternatively, the playback status indicators received from the placement agent **924** can be determined by the agent keeping track of the identity of the media file in playback and maintaining a playback clock that tracks the playback timing offset (e.g., in seconds). Using the playback status indicators from the placement agent **924**, the advertising engine **914** then references either the enhanced metadata **908** or data map **904** to determine which of the content segments is currently in playback.

At step **1108**, the advertising engine **914** continues to track the playback status until it detects a transition from a previous content segment (including no previous segment) to a current content segment. For example, with respect to FIG. **7**B, a segment transition is detected when the playback timing offset crosses timing offset T_{10} which divides the Red Sox story segment **902***j* and the New England Patriots story segment **902***k*. In particular, the playback offset is compared with the timing information of the enhanced metadata **908** or data map **904** to determine which of the content segments is presently in playback. At step **1010**, once a segment transition has been detected, the advertising engine **914** references the data map **904** of FIG. **7**C to determine the next set of advertising content to present based on the identifier of the current content segment in playback.

At step **1112**, the advertising engine downloads the advertising content identifiers **904***d*, **904***e*, **904***f* determined from the data map **904** of FIG. **7**C that correspond to the next set of advertising content to the placement agent **924**.

At step **1114**, the placement agent **924** uses the advertising content identifiers **904***d*, **904***e*, and **904***f* to select the corresponding advertising content from the available set of advertising content previously downloaded. The placement agent **924** then loads the selected advertising content into corresponding display objects **922** (e.g., windows, frames, scrolling text, etc.) of the display module **918** for presentation.

While this invention has been particularly shown and described with references to preferred embodiments thereof, it will be understood by those skilled in the art that various changes in form and details may be made therein without departing from the scope of the invention encompassed by the appended claims.

What is claimed:

1. A computer-implemented method for placement of advertising content within a playback stream, the method comprising

receiving a segment list of timed content segments chosen from a set of discrete media files;

obtaining enhanced metadata documents for the timed content segments, the enhanced metadata documents identifying timing information defined by timing boundaries of the timed content segments and at least one segment identifier associated with the timed content segments;

identifying, using a relevancy engine, at least one relevant segment identifier from the at least one segment identifier for each of the timed content segments;

associating the at least one relevant segment identifier to advertising content identifiers stored in a repository of a data map, the advertising content identifiers being mapped to specific advertising content;

detecting segment transitions between each of the timed content segments; and

presenting the specific advertising content that relates to each of the timed content segments at or near a time when the timed content segment is being played back.

2. The computer-implemented method of claim **1** wherein the segment identifier has a start offset and an end offset.

3. The computer-implemented method of claim **1** wherein the segment identifier is a word segment.

4. The computer-implemented method of claim **1** wherein the advertising content is stored in a data repository.

5. The computer-implemented method of claim **1** wherein the advertising content is in the form of audio, video, text, graphics and combinations thereof.

6. The computer-implemented method of claim **1** wherein the relevancy engine compares the at least one segment identifier against a predetermined set of key words.

7. The computer-implemented method of claim **1** wherein the relevancy engine interfaces with an advertising engine to generate the data map.

8. The computer-implemented method of claim **7** wherein a placement agent requests via the advertising engine a next set of advertising content to present via a display module.

9. The computer-implemented method of claim **1** wherein a placement agent is used for timed placement of the specific advertising content.

10. The computer-implemented method of claim **1** wherein a placement agent keeps track of a playback status for the segment list.

11. The computer-implemented method of claim **1** wherein a placement agent detects the segment transitions between each of the timed content segments.

12. A computerized apparatus for placement of advertising content within a playback stream comprising:

a media player programmed to receive a segment list of timed content segments chosen from a set of discrete media files and to obtain enhanced metadata documents

for the timed content segments, the enhanced metadata documents identifying timing information defined by timing boundaries of the timed content segments and at least one segment identifier associated with the timed content segments;

a relevancy engine implemented using a programmed processor and programmed to identify at least one relevant segment identifier from the at least one segment identifier for each of the timed content segments;

an advertising engine implemented using a programmed processor and programmed to associate the at least one relevant segment identifier to advertising content identifiers stored in a repository of a data map, the advertising content identifiers being mapped to specific advertising content; and

a placement agent implemented using a programmed processor and programmed to detect segment transitions between each of the timed content segments and present the specific advertising content that relates to each of the timed content segments at or near a time when the timed content segment is being played back by the media player.

13. The computerized apparatus of claim **12** wherein the segment identifier has a start offset and an end offset.

14. The computerized apparatus of claim **12** wherein the segment identifier is a word segment.

15. The computerized apparatus of claim **12** wherein the advertising content is stored in a data repository.

16. The computerized apparatus of claim **12** wherein the advertising content is in the form of audio, video, text, graphics and combinations thereof.

17. The computerized apparatus of claim **12** wherein the relevancy engine compares the at least one segment identifier against a predetermined set of key words.

18. The computerized apparatus of claim **12** wherein the placement agent keeps track of a playback status for the segment list.

19. The computerized apparatus of claim **12** wherein the placement agent detects the segment transitions between each of the timed content segments.

20. The computerized apparatus of claim **12** wherein the placement agent requests via the advertising engine a next set of advertising content to present via a display module.

* * * * *