US007546641B2

(12) **United States Patent**
Robert et al.

(10) **Patent No.: US 7,546,641 B2**
(45) **Date of Patent: Jun. 9, 2009**

(54) **CONDITIONAL ACCESS TO DIGITAL RIGHTS MANAGEMENT CONVERSION**

(75) Inventors: **Arnaud Robert**, Burbank, CA (US); **Thaddeus C. Pritchett**, Edmonds, WA (US)

(73) Assignee: **Microsoft Corporation**, Redmond, WA (US)

(*) Notice: Subject to any disclaimer, the term of this patent is extended or adjusted under 35 U.S.C. 154(b) by 1073 days.

(21) Appl. No.: **10/779,248**

(22) Filed: **Feb. 13, 2004**

(65) **Prior Publication Data**

US 2005/0182931 A1 Aug. 18, 2005

(51) **Int. Cl.**
H04L 9/32 (2006.01)

(52) **U.S. Cl.** **726/30**; 713/193

(58) **Field of Classification Search** ..... None
See application file for complete search history.

(56) **References Cited**

U.S. PATENT DOCUMENTS

5,990,883	A	11/1999	Byrne et al.	
7,299,362	B2 *	11/2007	Shen et al.	713/189
2003/0051149	A1	3/2003	Robert	713/189
2003/0126086	A1	7/2003	Safadi	705/51

OTHER PUBLICATIONS

Gasson Chaddoud, et al., "A Secure SSM Architecture", 10th IEEE International Conference on Networks, Aug. 2002, pp. 343-348.

Patrick Mannion, "Last Digital-TV Issues Get Resolved as Industry Gears Up for Prime Time", Electronic Design, vol. 48, Issue No. 8, Apr. 17,2000, pp. 85-97.

Hyeonjeong Mun, et al., "A Digital Content Management Model for Making Profits in Digital Content Sites," Proceedings: 5th International Conference on Asian Digital Libraries, ICADL 2002, Singapore, Dec. 11-14, 2002, pp. 516-517.

Dalit Naor and Moni Naor, "Protecting Cryptographic Keys: The Trace-and-Revoke Approach", IEEE Computer Society, vol. 36, Issue No. 7, Jul. 2003, pp. 47-53.

Brian Smith, "Fort TV", IEEE Spectrum, vol. 40, Issue 5, May 2003, pp. 30-32.

Changsheng Xu and David Dagan Feng, "Web-Based Protection and Secure Distribution for Digital Music", Proceedings: International Conference, Internet and Multimedia Systems and Applications, Honolulu, Hawaii, Aug. 13-16, 2001, pp. 102-107.

Gildred, J., et al. *Protected Entertainment Rights Management (PERM)*, Networking Working Group, Internet Draft, Feb. 3, 2004.

Eskicioglu, Ahmet M., Town, John, Delp, Edward J. *Security of digital entertainment content from creation to consumption*, Signal Processing Image Communication, Apr. 2003.

* cited by examiner

Primary Examiner—Brandon S Hoffman
(74) *Attorney, Agent, or Firm*—Workman Nydegger

(57) **ABSTRACT**

The present invention provides for an interface between two seemingly incompatible and different content protection systems. Accordingly, protected content may be transferred between the respective security kernels of a conditional access (CA) and digital rights management (DRM) systems, while maintaining security of the content and any associated protection information. The transfer and consumption of protected content and the associated content protection information may be achieved by temporarily or permanently binding the respective security kernels of the CA and DRM systems, transcribing content protection information, and potentially transcribing the content.

35 Claims, 11 Drawing Sheets

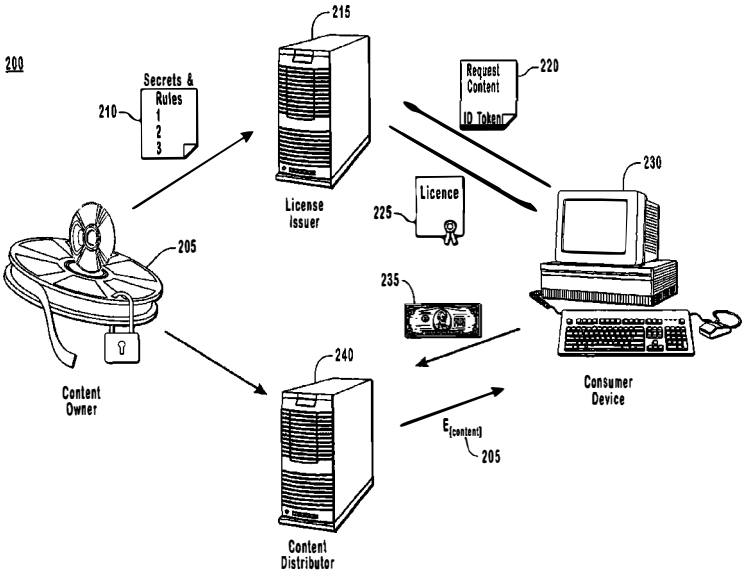

Hisense Ex. 1006
Hisense v. VideoLabs
IPR2025-00880

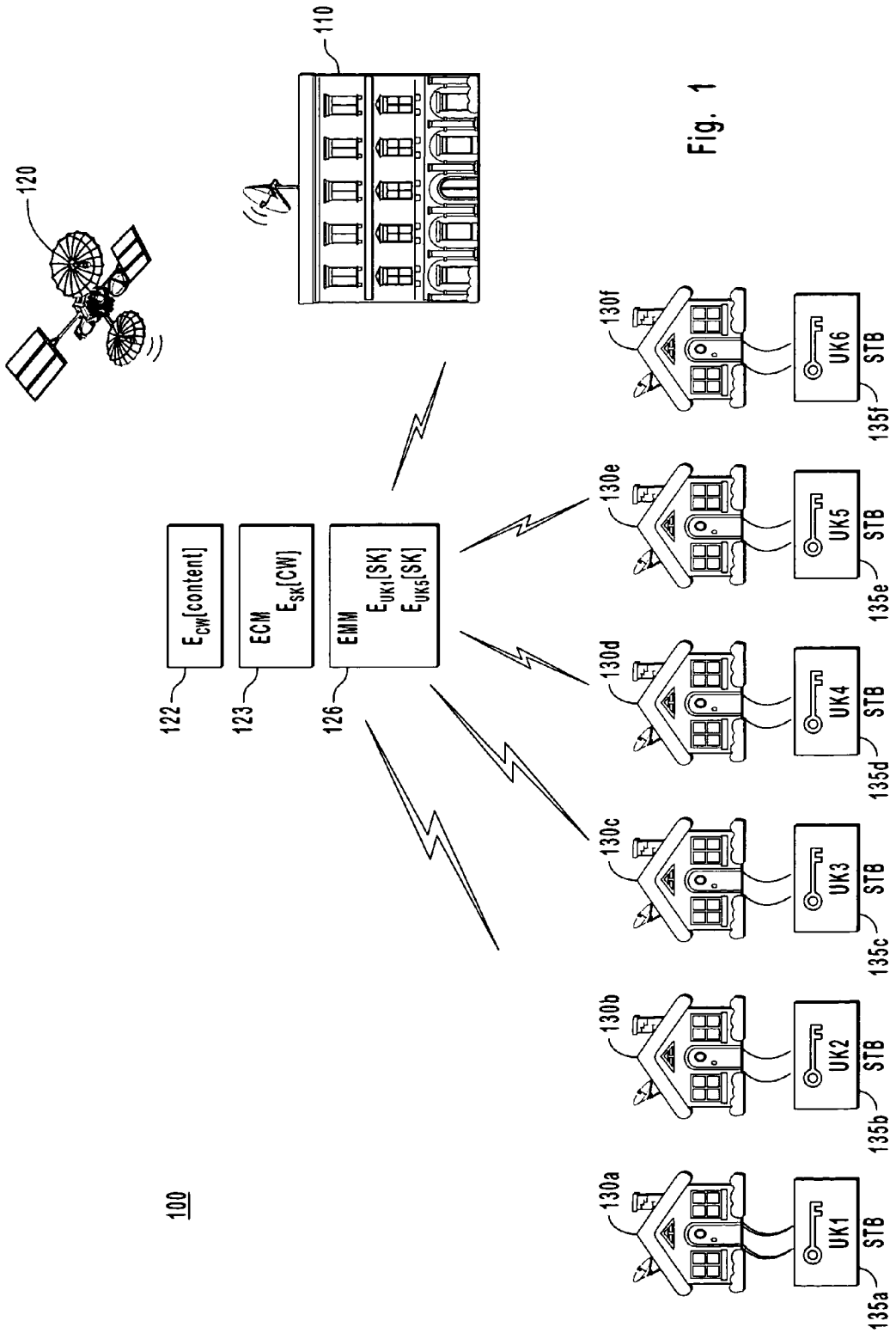
100
120
110
E_{CW}[content]
122
ECM
E_{SK}[CW]
123
EMM
E_{UK1}[SK]
E_{UK5}[SK]
126
130a
130b
130c
130d
130e
130f
UK1
UK2
UK3
UK4
UK5
UK6
STB
135a
135b
135c
135d
135e
135f

Fig. 1

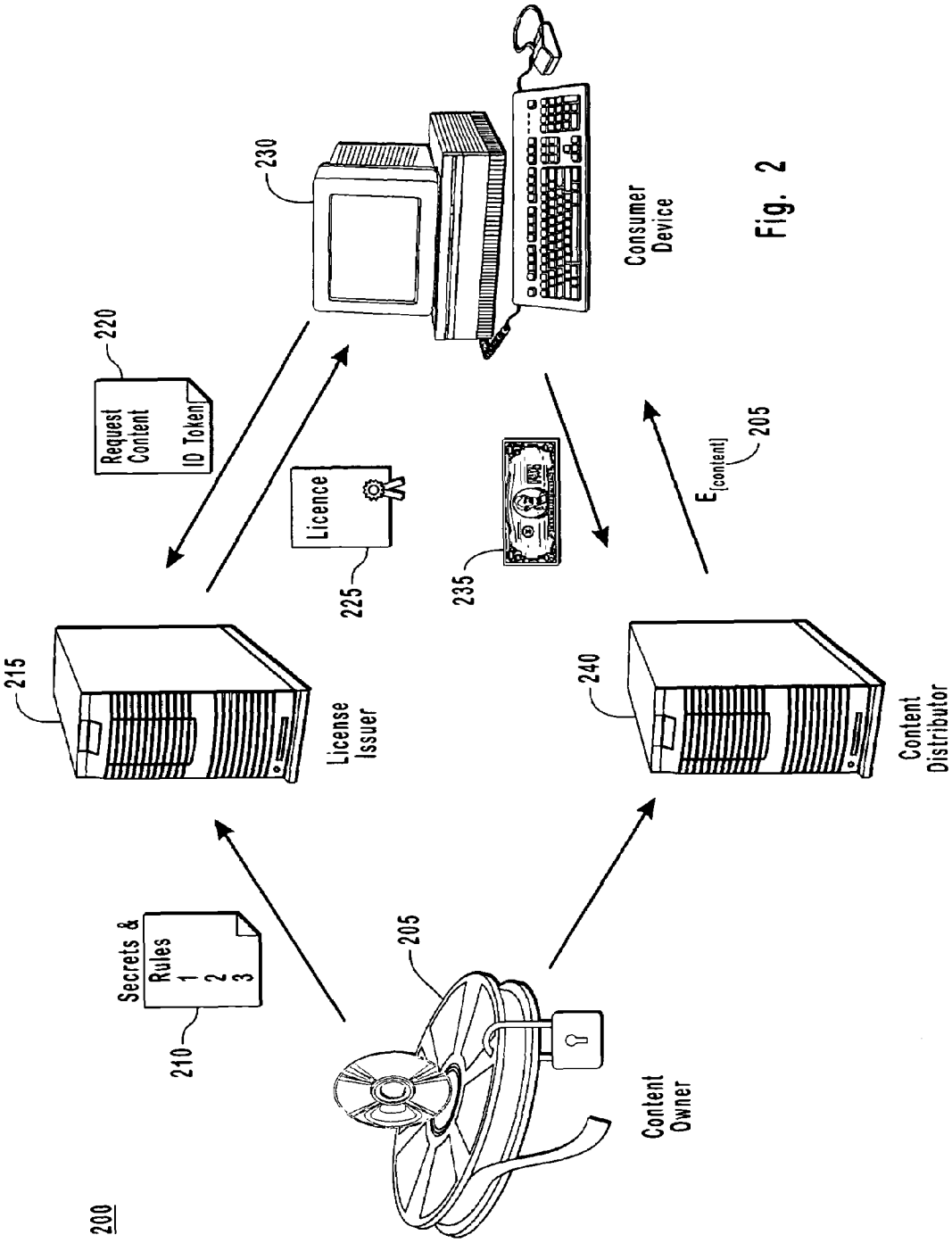
200
Secrets &
Rules
1
2
3
210
205
Content
Owner
215
License
Issuer
Request
Content
ID Token
220
Licence
225
230
Consumer
Device
235
$E_{[content]}$
205
240
Content
Distributor

Fig. 2

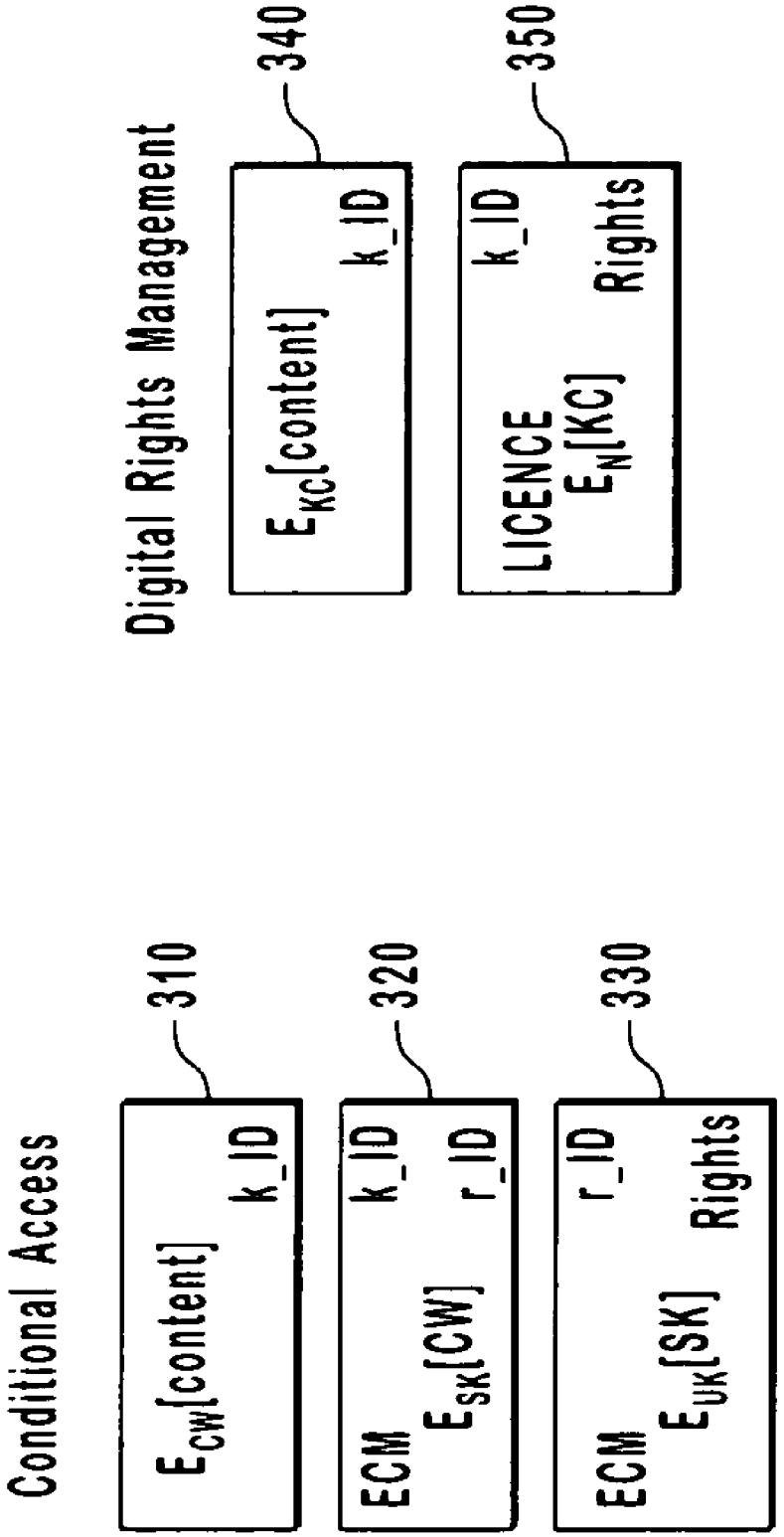
Conditional Access
310
E_{CW}[content]
k_ID
320
ECM
E_{SK}[CW]
k_ID
r_ID
330
ECM
E_{UK}[SK]
r_ID
Rights
Digital Rights Management
340
E_{KC}[content]
k_ID
350
LICENCE
E_N[KC]
k_ID
Rights

Fig. 3

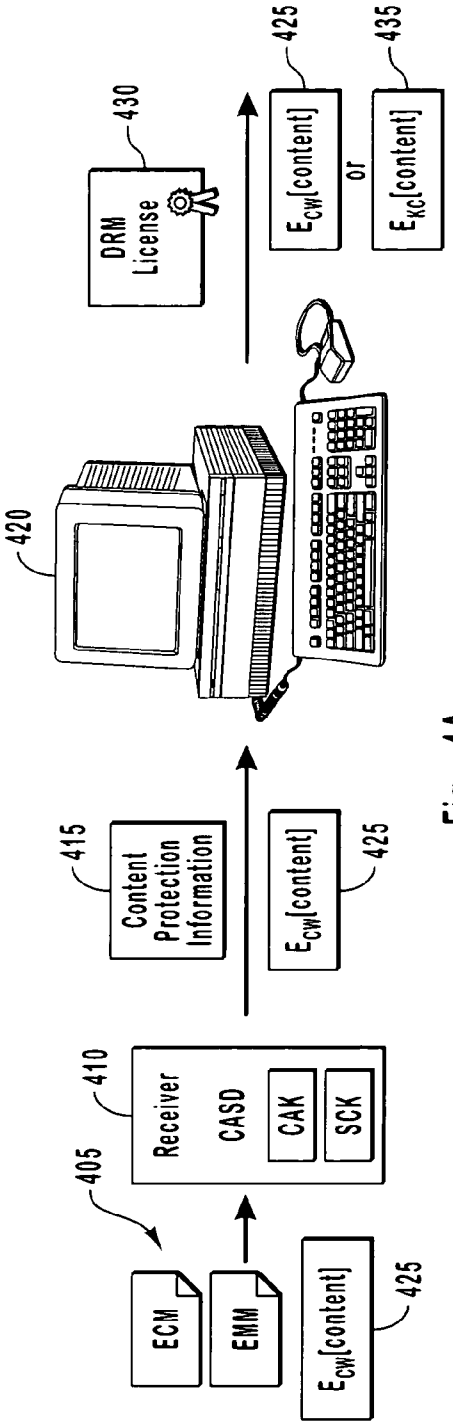
405
ECM
EMM
E_{CW}[content]
425
410
Receiver
CASD
CAK
SCK
415
Content Protection Information
E_{CW}[content]
425
420
430
DRM License
E_{CW}[content]
or
E_{KC}[content]
425
435

Fig. 4A

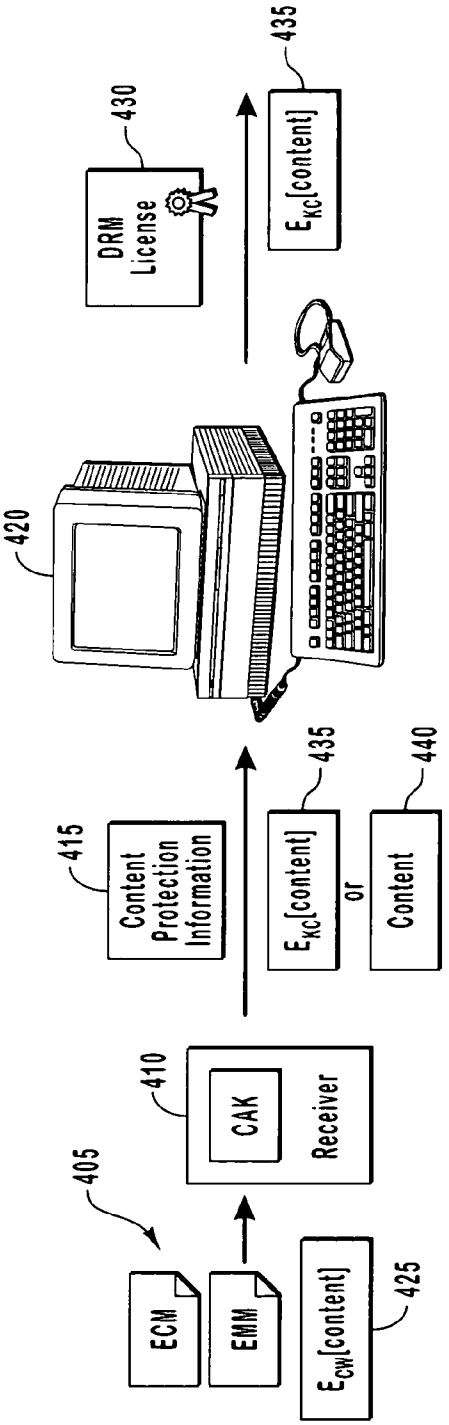
405
ECM
EMM
E_{CW}[content]
425
410
CAK
Receiver
415
Content Protection Information
E_{KC}[content]
or
Content
435
440
420
430
DRM License
E_{KC}[content]
435

Fig. 4B

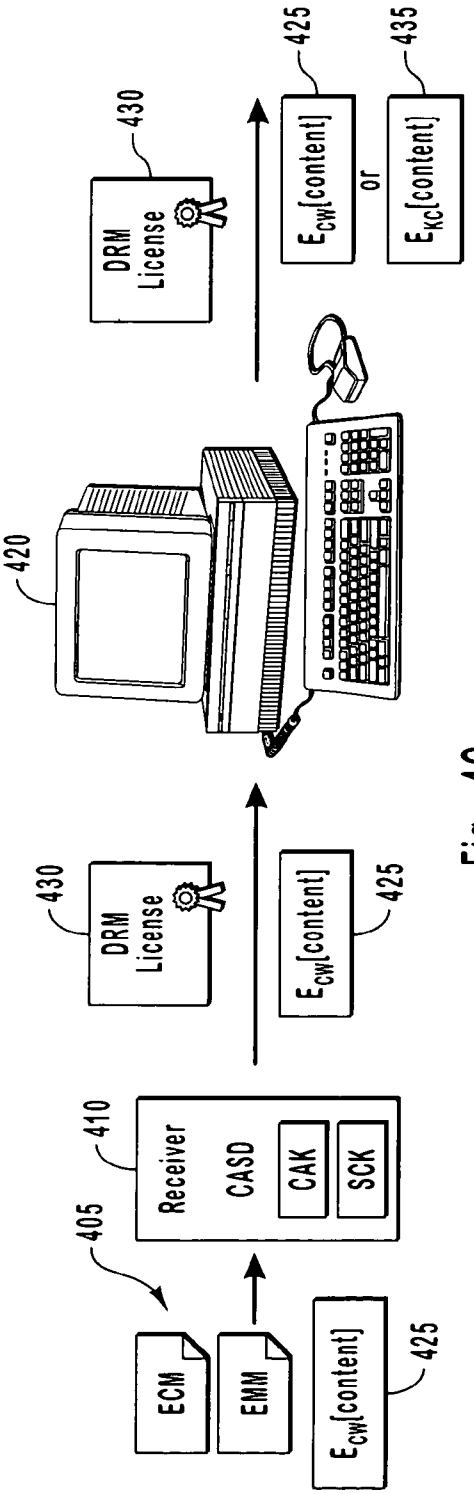
405
ECM
EMM
410
Receiver
CASD
CAK
SCK
E_{CW}[content]
425
430
DRM License
420
E_{CW}[content]
425
or
E_{KC}[content]
435

Fig. 4C

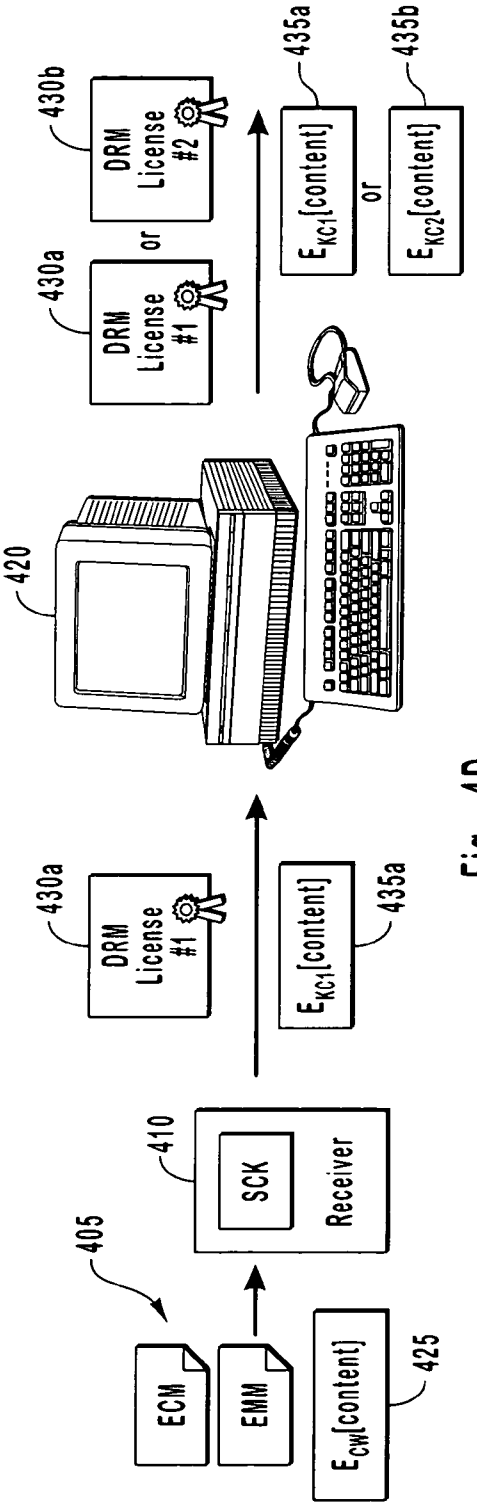
405
ECM
EMM
410
SCK
Receiver
E_{CW}[content]
425
430a
DRM License #1
E_{KC1}[content]
435a
420
430a
DRM License #1
or
430b
DRM License #2
E_{KC1}[content]
435a
or
E_{KC2}[content]
435b

Fig. 4D

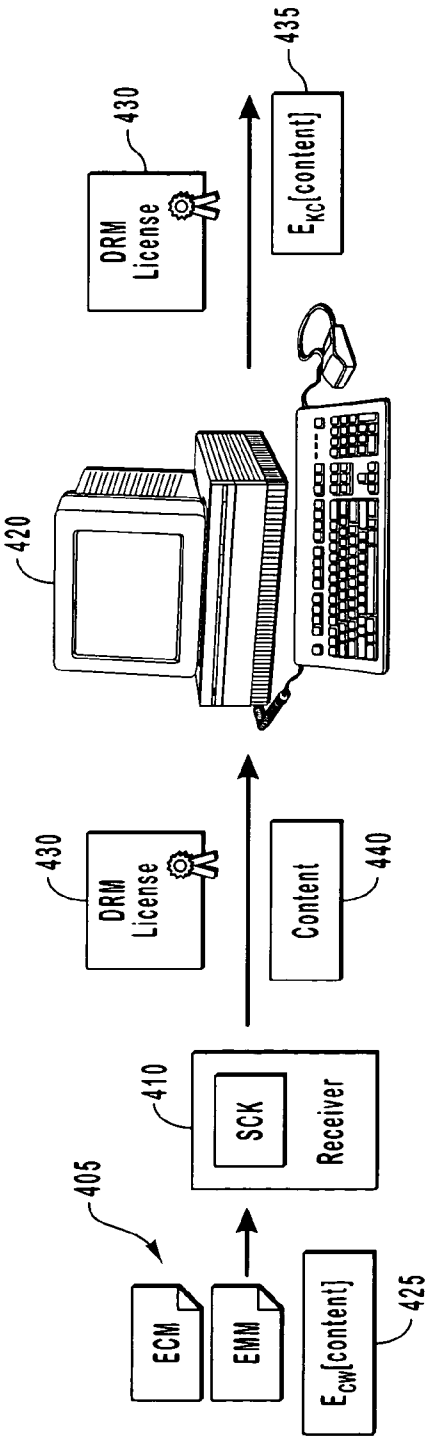
405
ECM
EMM
E_{CW}[content]
425
410
SCK
Receiver
430
DRM License
Content
440
420
430
DRM License
E_{KC}[content]
435

Fig. 4E

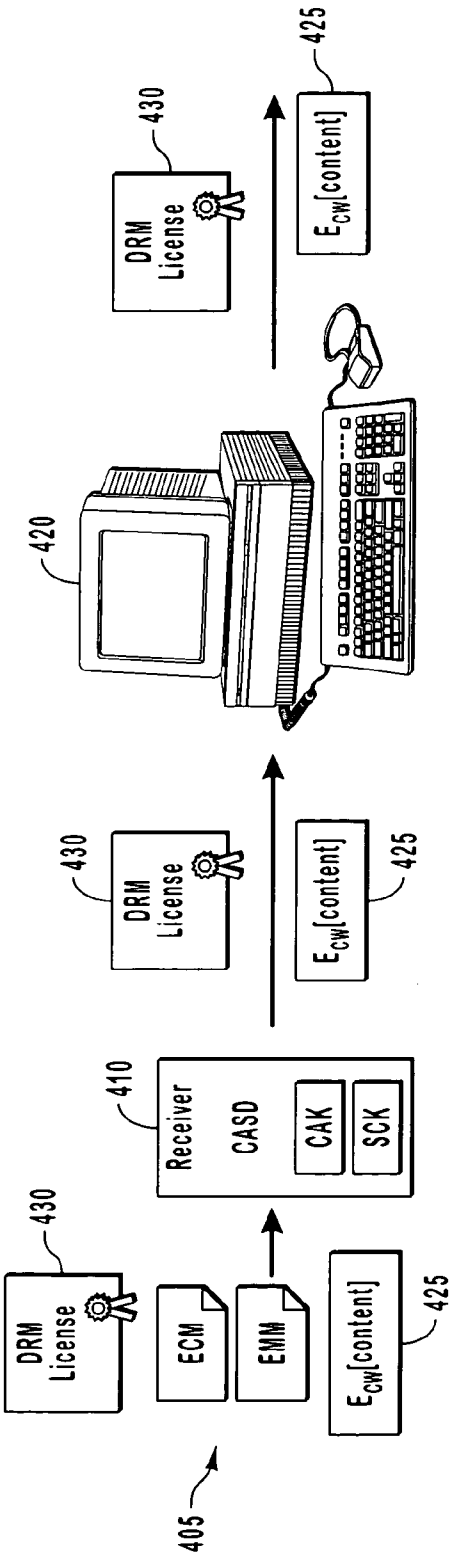
405
DRM License
430
ECM
EMM
E_{CW}[content]
425
410
Receiver
CASD
CAK
SCK
430
DRM License
E_{CW}[content]
425
420
430
DRM License
E_{CW}[content]
425

Fig. 4F

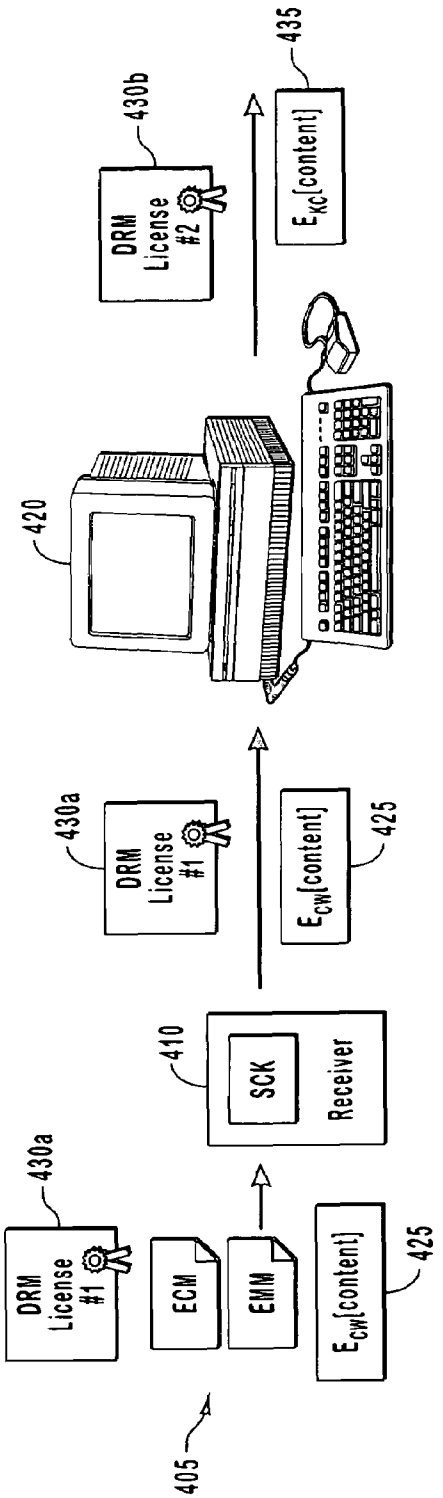
DRM License #1
430a
ECM
EMM
E_{CW}[content]
425
405
SCK
Receiver
410
DRM License #1
430a
E_{CW}[content]
425
420
DRM License #2
430b
E_{KC}[content]
435

Fig. 4G

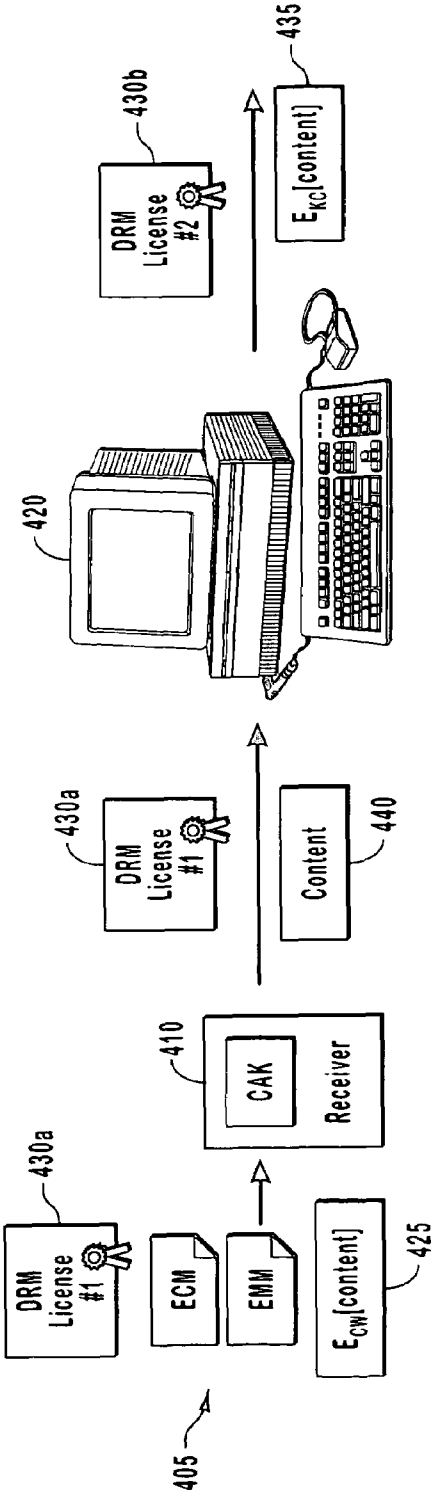
DRM License #1
430a
ECM
EMM
E_{CW}[content]
425
405
CAK
Receiver
410
DRM License #1
430a
Content
440
420
DRM License #2
430b
E_{KC}[content]
435

Fig. 4H

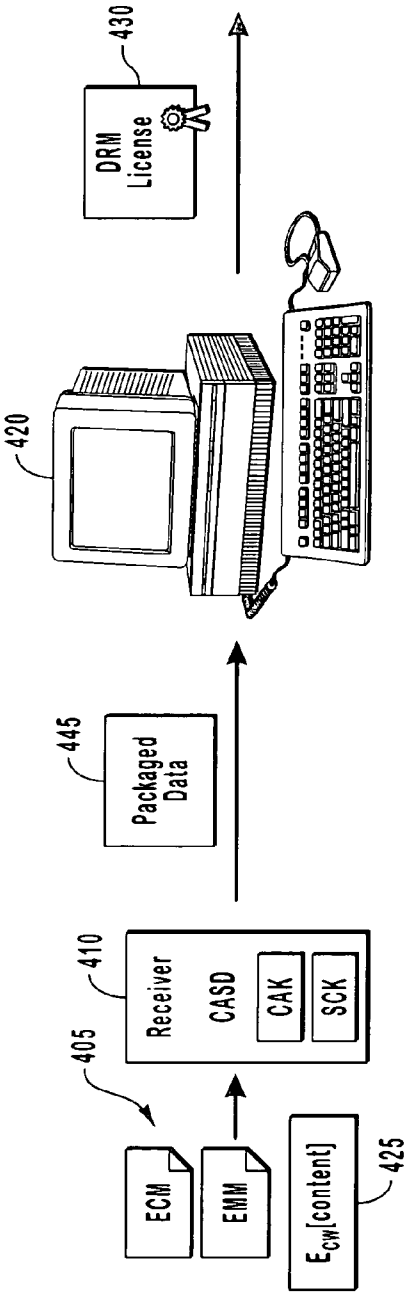
430
DRM License
420
445
Packaged Data
410
Receiver
CASD
CAK
SCK
405
ECM
EMM
E_{CW}[content]
425

Fig. 4I

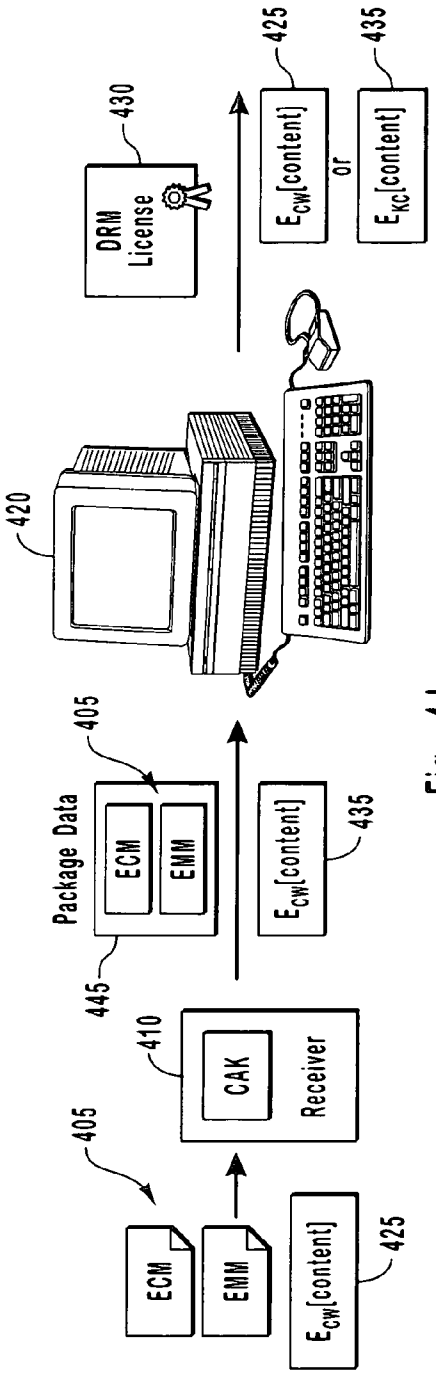
430
DRM License
425
E_{CW}[content]
or
435
E_{KC}[content]
420
405
Package Data
ECM
EMM
445
410
CAK
Receiver
E_{CW}[content]
435
405
ECM
EMM
E_{CW}[content]
425

Fig. 4J

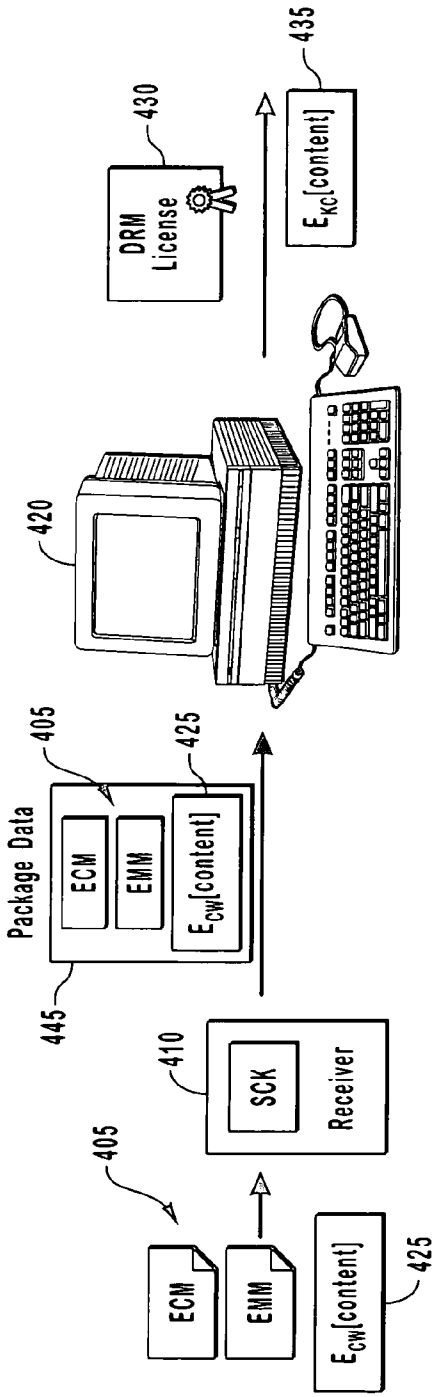
430
DRM License
435
E_{KC}[content]
420
405
Package Data
ECM
EMM
E_{CW}[content]
425
445
410
SCK
Receiver
405
ECM
EMM
E_{CW}[content]
425

Fig. 4K

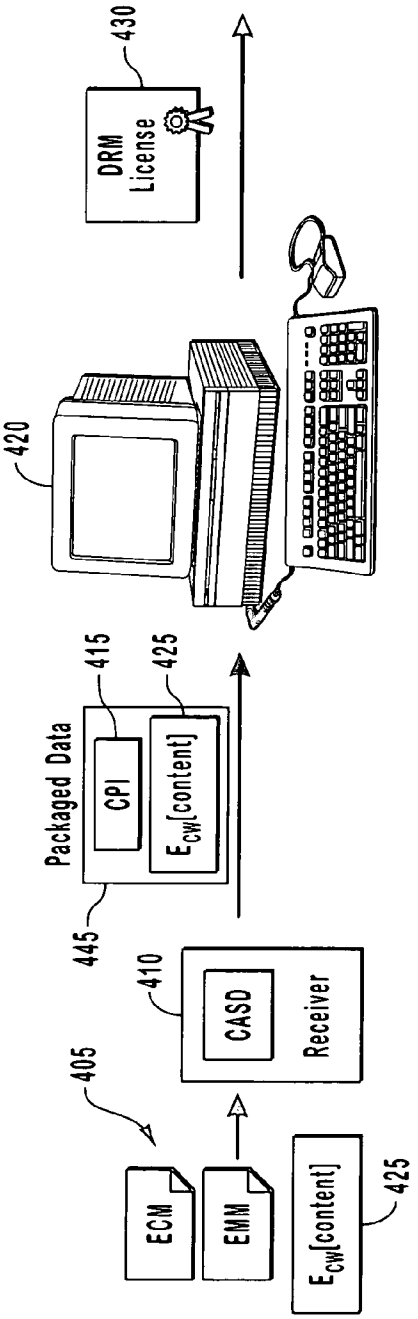
430
DRM License
420
415
Packaged Data
CPI
E_{CW}[content]
425
445
410
CASD
Receiver
405
ECM
EMM
E_{CW}[content]
425

Fig. 4L

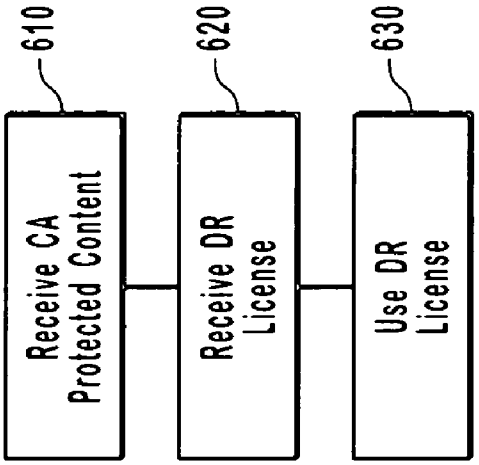
610
Receive CA Protected Content
620
Receive DR License
630
Use DR License

Fig. 6

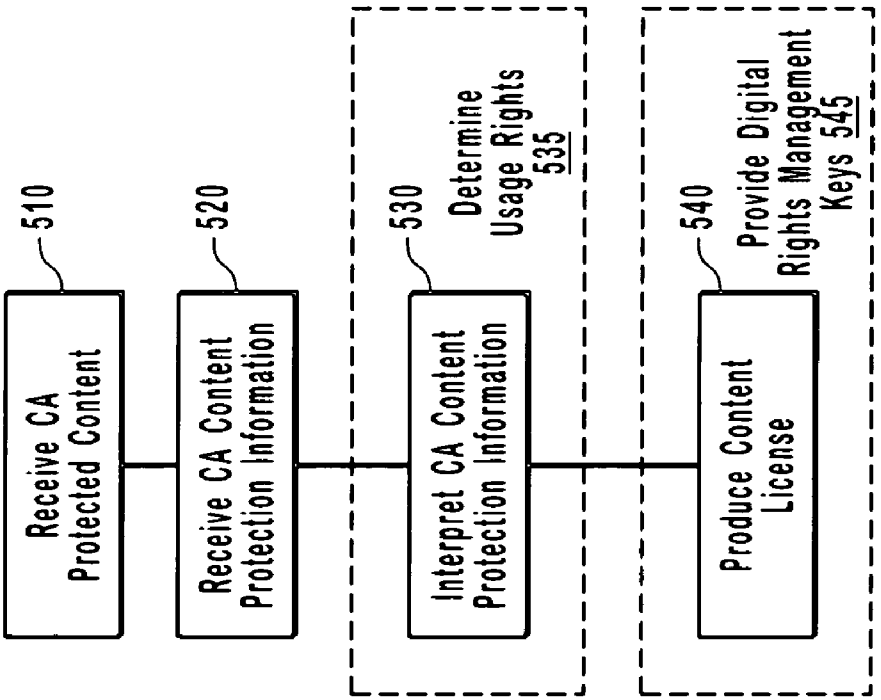
510
Receive CA Protected Content
520
Receive CA Content Protection Information
530
Interpret CA Content Protection Information
Determine Usage Rights 535
540
Produce Content License
Provide Digital Rights Management Keys 545

Fig. 5

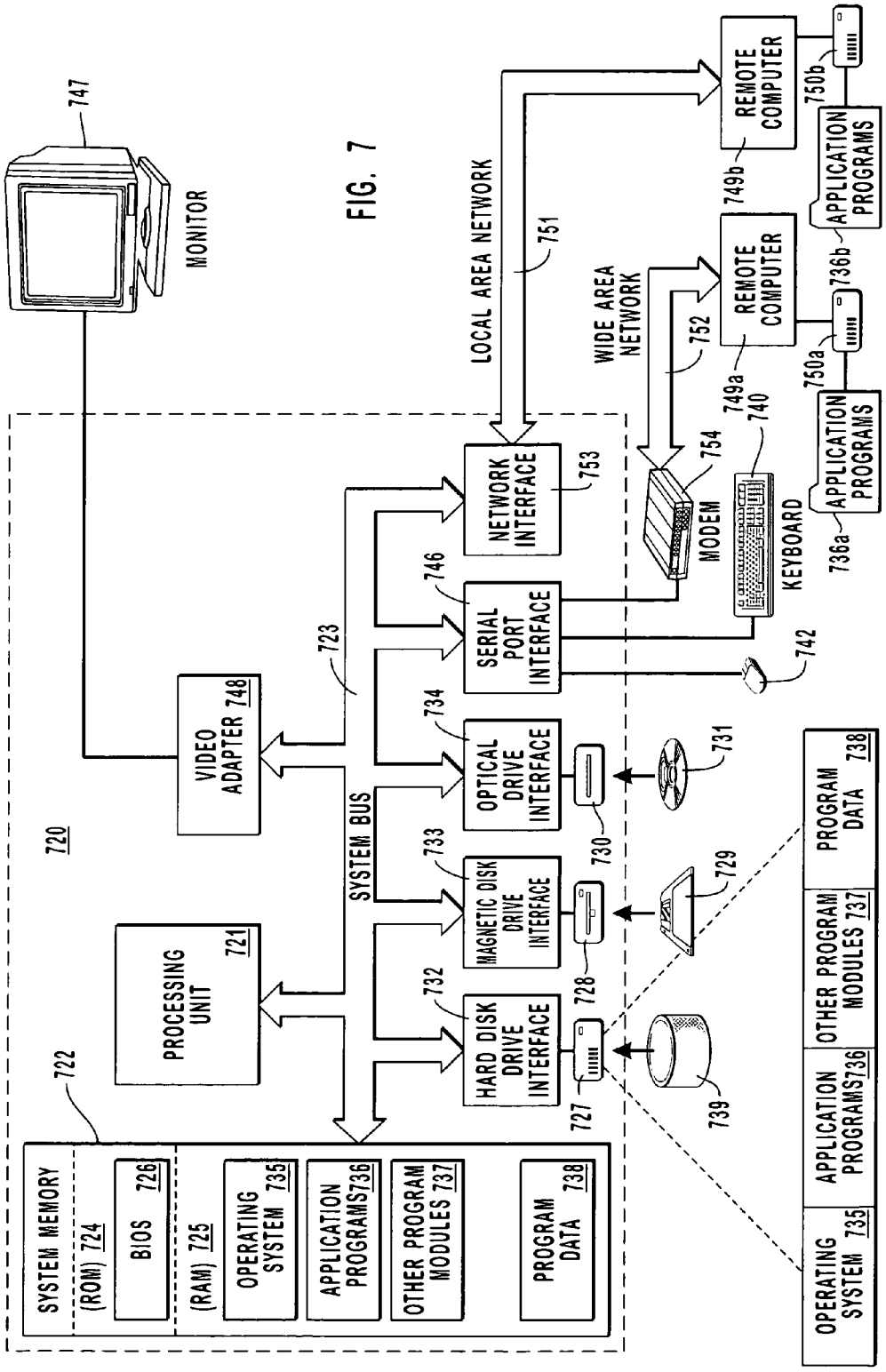
MONITOR
747
720
VIDEO ADAPTER 748
PROCESSING UNIT 721
722
SYSTEM MEMORY
(ROM) 724
BIOS 726
(RAM) 725
OPERATING SYSTEM 735
APPLICATION PROGRAMS736
OTHER PROGRAM MODULES 737
PROGRAM DATA 738
SYSTEM BUS
723
HARD DISK DRIVE INTERFACE
732
MAGNETIC DISK DRIVE INTERFACE
733
OPTICAL DRIVE INTERFACE
734
SERIAL PORT INTERFACE
746
NETWORK INTERFACE
753
LOCAL AREA NETWORK
751
WIDE AREA NETWORK
752
MODEM
754
KEYBOARD
740
742
727
728
730
731
729
739
REMOTE COMPUTER
749a
REMOTE COMPUTER
749b
APPLICATION PROGRAMS
736a
APPLICATION PROGRAMS
736b
750a
750b
OPERATING SYSTEM 735
APPLICATION PROGRAMS736
OTHER PROGRAM MODULES 737
PROGRAM DATA 738

FIG. 7

CONDITIONAL ACCESS TO DIGITAL RIGHTS MANAGEMENT CONVERSION

CROSS-REFERENCE TO RELATED APPLICATIONS

N/A.

BACKGROUND OF THE INVENTION

1. The Field of the Invention

The present invention generally relates to interfacing two different content protection schemes. More particularly, the present invention provides producing a digital rights management license for consuming protected content that originated from a conditional access scheme, while maintaining security of the content and any associated content protection information.

2. Background and Related Art

Growing concerns over the distribution of copyrighted content (such as audio, video, text, data, multi-media, etc.) over a wide range of media (e.g., magnetic disks, magnetic tape, optical disk, satellite, cable, terrestrial, etc.) has led to a number of diverse content protection methods. Generally these schemes are designed to protect content during transit as well as after the content has been received (e.g., at a set top box, personal computer, television, mobile phone, etc.). Two common types of protection schemes include conditional access (CA) and digital rights management (DRM) systems.

Conditional access (CA) systems (which are described in greater detail below, for example, with regard to FIGS. **2** and **3**) are used in broadcast platforms to securely deliver content from a service operator, such as a satellite or cable provider, to individual receivers. Most network operators will scramble at least some of their services in order to protect their pay-TV operations. Conditional access systems utilize security principles that include the encrypted data as well as two additional types of data known as CA messages (CAM), which are typically broadcast in the transport stream along with, or in parallel with, the scrambled program. CAMs consist of two separate and independent messages streams, one that includes a set of intermittent and continually updated encryption keys and the other that includes the subscriber rights to view a specific program. Both CA messages include the associated access conditions.

In contrast to CA systems for broadcast delivery of content (and as described in greater detail below, for example, with regard to FIGS. **2** and **3**), DRM systems have been developed to securely allow consumption of other types of content (e.g., CDs, MPEG files, DVDs, audio/video streams, etc.) on devices such as personal computers and other electronic items. Rather than the multitude of intermittently updated keys and the multiple message streams used in CA schemes, DRM systems typically use a single license that includes the content usage rights as well as a decryption key for consuming the protected content. Further, the license can be delivered independent of the content, yet bind the content to the license and to a particular device or potentially a group of devices.

CA and DRM technologies were developed for protecting different types of content with different delivery mechanisms, and thus with different security risks in mind. For example, CA protection systems were developed for pay-TV media that is broadcast to a plurality of devices in a streaming fashion, i.e., real time playback. Accordingly, because the content is broadcast and streamed, the various levels of protection (such as the intermittent updated keys and encryption thereof at different times and concealed in different messages) were considered important, possible, and practical.

On the other hand, DRM systems were developed for sending a single piece of content (i.e., not necessarily a real time broadcast, but digital data that can be stored and subsequently played/consumed) to typically a single device (or small group of devices). Accordingly, the binding of the content to a single license and binding the license to a particular device (or group of devices) provides an appropriate level of protection which is somewhat tailored to how the content is received and consumed.

Emerging network technology, e.g., home networking, however, is beginning to expose current incompatibilities between these alternative content protection methods. In particular, the desire to make all (or at least most) appliances and other devices within a home capable of communicating with one another, and being able to utilize the unique capabilities of each devices on any device within the home network, make unifying these two content protection systems advantageous.

BRIEF SUMMARY OF THE INVENTION

In accordance with exemplary embodiments of the present invention, the above-identified desire for interfacing two different protection schemes is achieved. For example, the present invention provides an entertainment media environment capable of translating one content protection scheme into a different content protection scheme. In particular, the present invention provides for methods, systems and computer program products that produce a content license used to consume content in accordance with usage rights defined by a content protection scheme, although the content originated from a different content protection scheme.

Example embodiments provide for receiving conditional access-protected content broadcast to a plurality of receivers and encrypted by a plurality of intermittent updated keys. Conditional access content protection information is also received that includes information used to determine, manage and enforce usage rights associated with the conditional access protection content. The conditional access content protection information is interpreted for determining the usage rights defined by the content provider, which specify how and under what conditions content may be consumed at a destination device. Based on the interpreted conditional access content protection information, a content license is produced and used for enforcing digital rights within the destination device by providing one or more digital rights management keys in accordance with the usage rights.

Other example embodiments provide for an entertainment media environment that receives conditional access-protected content broadcast to a plurality of receivers and encrypted by a plurality of intermittent updated keys. A digital rights license is received and includes information that specifies how and under what conditions the conditional access-protected content may be consumed at a destination device. The digital rights license also includes at least a portion of the plurality of intermittent updated keys. The conditional access-protected content may then be decrypted using the digital rights license at a destination device that uses a digital rights protection scheme to consume content.

Additional features and advantages of the invention will be set forth in the description which follows, and in part will be obvious from the description, or may be learned by the practice of the invention. The features and advantages of the invention may be realized and obtained by means of the instruments and combinations particularly pointed out in the appended claims. These and other features of the present

invention will become more fully apparent from the following description and appended claims, or may be learned by the practice of the invention as set forth hereinafter.

BRIEF DESCRIPTION OF THE DRAWINGS

In order to describe the manner in which the above-recited and other advantages and features of the invention can be obtained, a more particular description of the invention briefly described above will be rendered by reference to specific embodiments thereof which are illustrated in the appended drawings. Understanding that these drawings depict only typical embodiments of the invention and are not therefore to be considered to be limiting of its scope, the invention will be described and explained with additional specificity and detail through the use of the accompanying drawings in which:

FIG. **1** illustrates an example of a typical conditional access content protection scheme;

FIG. **2** illustrates an example of a typical digital rights management system content protection scheme;

FIG. **3** illustrates a side-by-side comparison of conditional access packaging scheme to a digital rights management packaging scheme;

FIGS. **4**A-L illustrate various implementations of translating from conditional access content protection scheme to a digital rights management content protection scheme in accordance with example embodiments;

FIG. **5** shows example acts and steps for methods of producing a content license in accordance with example embodiments;

FIG. **6** shows example acts for methods of using a digital rights license to consume conditional access protected content in accordance with example embodiments of the present invention; and

FIG. **7** illustrates an example system that provides a suitable operating environment for the present invention.

DETAILED DESCRIPTION OF THE PREFERRED EMBODIMENTS

The present invention extends to methods, systems and computer program products for producing a content license used to consume content in accordance with usage rights defined by a content protection scheme different from the originating content protection scheme. The embodiments of the present invention may comprise a special purpose or general-purpose computer including various computer hardware, as discussed in greater detail below.

Example embodiments provide for methods, systems and computer program products for achieving the above-identified desire for interfacing two different protection schemes. In particular, because of the desire for sharing information between different devices within a home network, the present invention provides for the transfer of protected content between the respective security kernels of a conditional access (CA) and digital rights management (DRM) systems, while maintaining security of the content and any associated protection information. In the following description, content protection information (CPI) will be used as a generic term to comprise any information used to determine, manage or enforce usage rules associate with the content. More particularly, CPI will refer to content encryption keys, usage rights, licensing terms, access conditions, other security keys, and any other information useful to the protection of the content. The transfer and consumption of protected content and the associated content protection information may be achieved by temporarily or permanently binding the respective security kernels of the CA and DRM systems, transcribing the content protection information, and potentially transcribing the content.

FIG. **1** illustrates a typical CA system **100** wherein a network operator **110** wishes to scramble at least some of their services in order to protect their pay-TV or other operations. This means, of course, that the receivers shown here as set top boxes (STB) **135***a-f* will contain some descrambling software for accessing these services. The scrambled or encrypted content **122** is broadcast in a transport stream via any one of several broadcast means, e.g., satellite, cable, terrestrial, etc. (shown here as satellite system **120**) and received by users **130***a-f*. Accordingly, the same information is received by all users **130***a-f;* however, without the appropriate keys as described below unauthorized users will be unable to decrypt the protected content **122**.

In addition to the encrypted content **122**, the CA system adds two types of data to the transport stream. These are known as CA messages (CAM), and consist of entitlement control messages (ECM) **123** and entitlement management messages (EMM) **126**. Together, these control the ability of individual users **130***a-f* (or groups of users) to watch protected content. The encryption (and decryption) process relies on three pieces of information: (1) the control word; (2) the service key; and (3) the user key.

The control word (CW) is encrypted using the service key (SK), providing the first level of encryption. This SK may be common to a group of users, and typically each encrypted service will have one SK. This encrypted CW is broadcast in an ECM **123** approximately once every two seconds, and is what the decoder or receiver **135***a-f* actually needs to descramble a service.

Next, broadcaster or network operator needs to ensure that only authorized users (i.e., those who have paid) can decrypt the CW. To do this, the SK is itself encrypted using the user key (UK), e.g., UK**1**-**6**. Each user key is unique to a single user, and so the service key must be encrypted with the UK for each user that is authorized to view the content. Once the SK is encrypted, it is broadcast as part of an EMM **126**. Since there is a lot more information to be broadcast (i.e., the encrypted SK must be broadcast for each authorized user), these are broadcast less frequently than the ECM **123**. The following provides an example of the aforementioned CA process.

Encrypted content **122** and CAM messages, which consist of ECM **123** and EMM **126**, are broadcast from network provider **110** via satellite **120** to a multitude of users **130***a-f*. Encrypted content **122** is encrypted using a control word (CW), which is subsequently encrypted using a service key (SK) and broadcast in the transport stream in an ECM **123**. An EMM **126** is also broadcast in the transport stream, which includes the SK encrypted to the user key (UK) for those authorized users who have paid for the service. For example, as shown in FIG. **1** users **130***a* and **130***e* have paid for the service from the network provider **110**, and therefore the SK has been encrypted using UK**1** and UK**5**, corresponding to users keys for **130***a* and **130***e*, respectively, and included in the EMM **126**. Accordingly, even though all users **130***a-f* receive the same broadcast signal, only receivers **135***a* and **135***e* will be able to decrypt the SK, and subsequently use the SK to decrypt the CW, which can then be used to decrypt the protected content **122**.

In contrast to the aforementioned CA system, DRM systems use a different process for encrypting and decrypting protected content. FIG. **2** illustrates an example of a DRM system **200**, which allows a content owner to distribute pro-

tected content **205** to a device **230**. In general, the licensing process is initiated by the content owner encrypting content and packaging and distributing the content to consumers via the Internet, CD or other conventional means. Consumers may then receive a license for consuming the content in accordance with the business rules **210** defined by the content owner. The following describes a typical process for how a license **225** is received and used in order to decrypt protected content **205** in the DRM model.

Content owner usually encrypts and packages the content **205** in accordance with any number of well-known processes. Typically, however, the content will be packaged to include the encrypted content **205** and a header portion that includes information to assist a device **230** in consuming the content. Further, the packaged content may use a license acquisition URL to point to a location where a license **225** may be acquired. Moreover, there is a number of other optional and important data which may be included within the packaged file, e.g., private signing key used to sign the content header, license key seed used to generate the key that is shared between the content owner and license issuer, etc.

The protected content **205** may be sent to a content distributor **240** and placed on a web server or streaming server for distribution. Devices **230** receiving the content may then be directed to the license acquisition URL that is embedded within the header of the file to acquire the appropriate license **225** for consuming content **205**. Before license **225** can be distributed by license issuer **215**, the content owner must send to the license issuer **215** the business rules and sharing of secrets **210**, which typically include the seed, public key and the business rules by which a license **225** will be granted. The rules **210** define how and under what conditions licenses may be distributed to users. For example, the rules may allow for the distribution of digital content to be played only a limited number of times, only for a certain total time, only on a certain type of machine, only on a certain type of media player, only by a certain type of user, etc. In any event, the license issuer **215** should be trusted in order to ensure that licenses **225** are issued in accordance with the appropriate business rules or requirements **210** as specified by the content owner.

Device **230** may obtain the content **205** from the content distributor **240** after paying such consideration **235** as defined by the content owner when the content **205** is sent to the content distributor **240**. As previously mentioned, in order to play the encrypted content **205** the device **230** must first obtain a license **225** from the license issuer **215**. Device **230** may use the license acquisition URL within the header of the encrypted content **205** to determine who the license issuer **215** is in order to make a request **220** for a license **225**. A request process may then be initiated, which includes exchanging the content header, information about the client computer **230** and other optional information. Based on the information received, the license issuer **215** responds with an appropriate license **225** allowing device **230** to consume the encrypted content **205**. This license **225** will typically include only a single encrypted key (KC) to decrypt the content, the specified rights, information about the device **230** and other content protect icon information.

Based on the above description for CA and DRM systems, it is easily seen that the two systems employ different mechanisms for protecting content. FIG. **3** illustrates a side-by-side comparison of a CA packaging scheme with a DRM packaging system. One of the key differences to note between the CA and DRM systems is that a DRM system uses a single license, typically with a single encrypted key, to decrypt the content **340**, whereas the CA system uses a multitude of intermittently updated keys to view or consume content. For example, a two hour movie encrypted in a DRM system will typically have one license **350** associated with the encrypted content **340**, and will also typically have one encrypted key within the license **350**, which is used to decrypt content **340**.

The CA system, on the other hand, provides several layers of encryption and dynamically or continually changing encryption keys embedded within two different messaging mechanisms. In particular, the continually updated control words used to decrypt the content are encrypted using the service keys, which also periodically change, and which are embedded within the ECM **320**. Further, the SK is encrypted using various user keys and included in the EMM **330**. Accordingly, several SKs and possibly hundreds or thousands of CWs may be required in order to view or consume the same two hour movie for which a DRM system might only one license and one encryption key.

As previously mentioned, with the increasing popularity of home networking, there is an unmet need to relate CA protection systems to DRM protection systems. Accordingly, the present invention provides for methods, systems and computer program products for securely interfacing the CA and DRM systems and to transfer content protection information between the respective security kernels, while maintaining security of the content and any associated protection content information (e.g., usage rights, access conditions, encryption keys, etc.). The present invention provides for temporarily or permanently binding the respective CA and DRM security kernels, transcribing content protection information from the CA syntax to the DRM syntax, and potentially transcribing the protected content.

As will be recognized, there are many ways in which the transcription of the content protection information from conditional access to a digital rights management system can be achieved. For example, as shown in FIG. **3** in the side-by-side comparison of the CA packaging scheme with the DRM packaging system, the multitude of CWs used to encrypt content **310** in accordance with the CA method could be included and transcribed into license **350**, thereby allowing license **350** to be used to decrypt the encoded conditional access content. Alternatively, or in addition, the license may include the service keys used to encrypt the CWs, thereby having an additional layer of protection within the license **350** when transcribing to the DRM system. As another example, encrypted content **310** could be decrypted using ECM **330** and ECM **320** in accordance with traditional CA methods, and a license **350** could then be generated and content encrypted using traditional DRM methods. In fact, any combination and number of possible mappings between the CA and DRM syntax is possible, and therefore the aforementioned and following examples for transcribing CA and DRM syntax is used for illustrative purposes only and is not meant to limit the scope of the present invention. Further, as described in greater detail below, the transcription of the content protection information from the CA syntax to the DRM syntax can occur in any one of a multitude of different devices, as well as at different times during the conversion process. Accordingly, the following implementation details are not meant to limit or otherwise narrow the scope of the present invention.

As previously mentioned, the present invention establishes a process for producing the content license used to consume content in accordance with usage rights defined by a content protection scheme, although the content originated from a different content protection scheme. Example embodiments provide for establishing a binding mechanism between the security kernels of a conditional access and digital rights management systems by authenticating the two security ker-

nels when communicating. As will be described in greater detail below, for example with respect to FIGS. **4**A-**4**L, the transfer of usage rights information and the transfer of the protected content may be implemented in any one of several different ways.

The binding functionality relies on secret information which can be stored in different ways. In the preferred embodiments, the binding information is stored in a trustworthy, unbreakable security device, e.g., a smart card or other security chip. Other example embodiments provide that the binding information may be stored in a secured library, ideally accessible only for reading from the security kernel of the DRM system. Alternatively, or in addition, the binding information may be stored in a secured file, available only to security kernels of the applications.

As will be appreciated, a number of realizations are possible for binding between the CA and DRM security kernels. For example, the security kernels may share a common secret and can secure exchange of information by encrypting the content using the secret. The secret could either be static (i.e., loaded in the kernel at installation time or individualization time), or dynamic (i.e., the secret could change over time using a software downloadable mechanism or an internal automated update process). The common secret could also be provisioned to the security kernels by the use of a public key cryptography and/or certificates.

Alternatively, the CA and DRM protection methods may have means to exchange certificates containing public key cryptography-based information. For example, the destination device kernel, i.e., the DRM system, could send its certificate to the receiving kernel, i.e., the CA kernel, when requesting information. The receiving kernel could then validate the certificate, and based upon the validity thereof, encrypt the requested information using the public key of the destination kernel and send the encrypted information. The destination device could then use its private key to retrieve the information. Of course, other means to mutually authenticate the kernels could be implemented, e.g., Dilfe-Hellman or other public key cryptography algorithms.

The binding duration between the two security kernels may be infinite or last for a specified duration. If the binding does not expire, (or in the case of long specified durations) the binding mechanisms may involve dynamic updates of the secrets used to exchange sensitive information, as discussed above. If the binding expires, either security kernels can trigger a new binding process, in a stand-alone way or through a trusted authority.

Provided successful authentication of the destination kernel, i.e., the DRM device, the change in binding information will automatically trigger both the receiving and destination kernels to use the new binding information in all subsequent exchange of sensitive information. Example embodiments provide that the receiving kernel may manage the binding mechanism for the destination kernel. This dynamic binding can use a higher level secret (symmetrical or asymmetrical), common to all security kernels capable of working with it, to send the new binding information to the destination device. The higher level secret should reside in a reputed unbreakable location, e.g., a smart card, an embedded chip or a tamper-proof location. The change of binding information can be programmed, or triggered at any time by the receiving device.

The trust between the two security kernels may be challenged at any time, independently of the receiving and destination security kernels. In such an event, the challenging kernel will ask the other kernel to send its binding-related information, e.g., a certificate. If the challenge is successful, sensitive information can be transmitted back and forth again, otherwise communication would be halted. The challenge-response can happen at a predetermined time, randomly chosen time, or triggered by either the receiving or destination security kernels, or never. A number of alternative challenge-response protocols can also be used to sporadically verify the authenticity of either security kernels.

Other example embodiments provide for a number of realizations for the transfer of usage rights or content protection information. For example, the receiving device (i.e., CA device) transfers the CPI to the destination device (i.e., DRM device), which will then generate the appropriate DRM content license either locally or using a remote server to which it connects. Another embodiment provides that the receiver is capable of generating the appropriate license in the format or syntax recognized by the destination device. The generation of the content license can be done locally or using a remote server to which the receiver connects. In yet another embodiment, the license associated with the DRM protection scheme is conveyed with the content received by the receiver or CA syntax device. For example, the DRM license could be transmitted via a private descriptor of a CA-protected (or non CA-protected) transport stream.

Similar to the variations in the transfer of content protection information, there are a number of realizations for the transfer of the protected content itself. For example, the protected content may be transmitted "as is" from the receiving device to the destination device. Alternatively, in accordance with example embodiments, the receiver or CA device decrypts the content and sends it to the destination device, compressed or uncompressed, which will subsequently encrypt the content in accordance with the DRM license and CPI. The communication channel between the CA device and the DRM device will typically be secured, e.g., by hardware or with a link protection mechanism, but this is not necessary. In any case, the DRM device should have means to securely generate the encryption key(s) and encrypt the content as well as update the CPI information within the content license to indicate the new encryption key set. Another example embodiment provides that the CA device sends the encrypted content to the DRM device, which decrypts the content using the CPI associated with the content and re-encrypts the content locally.

Other example embodiments provide that if the destination device or DRM device receives content that is not protected by the receiving device or CA device, but nonetheless carries CPI, then the DRM device may apply a default content protection policy closest to its interpretation of the CPI.

In still yet another embodiment, the receiving device transcripts the content (and possibly the license) into a link encryption mechanism, which will then be converted to the DRM mechanism. Typically, the content would remain encrypted with the keys used in the link encryption (and possibly the same keys as the ones used in the CA protection) and only the license would be transcripted from the link protection to the DRM protection.

FIGS. **4**A-L, and the following description thereof, illustrates various implementations of how the content protection information may be used to create a DRM license and subsequently view CA protected content. The following illustrations and descriptions thereof are merely example implementations of the above exemplary embodiments, and therefore are not meant to limit or otherwise narrow the scope of the present invention. Further, the following descriptions of FIGS. **4**A-L refer to various devices for transcribing from CA to DRM when creating a DRM license and subsequently using the license to consume protected content. It should be recognized, however, that there are a number of different type

of devices which could perform similar functions. For example, as described above, the receiver **410** or destination device **420** can be used to generate a DRM license. Alternatively, receiver **410** or destination device **420** may connect with a trusted remote device, which could also generate the DRM license. Moreover, the receiver or destination kernels could be anyone of a smart card, conditional access kernel, tamper proof chip, secure library, etc. As such, the following implementations are examples of using CA content protection information to generate a DRM license, however, the list is not to be interpreted as exhaustive.

FIG. **4**A shows an example implementation in which a receiver **410** or CA secured device (CASD) receives conditional access messages (CAM) **405**, i.e., ECM and EMM, along with protected content **425**. As mentioned previously, receiver **410** may include any of a number of security devices such as a conditional access kernel (CAK), smart card kernel (SCK), or the like. Receiver **410** sends content protection information **415**, as well as the received CA-protected content **425** to the destination device **420**. The destination device will be a DRM system that includes a secure mechanism for generating DRM license **430** based upon the CPI **415**. Destination device **420** will include a security kernel that may be in the form of a secure library or other similar dll capable of securely generating DRM license **430**. The CA-protected content **425** could be left "as is," and as such, the DRM license **430** would include a list of keys similar to those provided in CAM **405**. Alternatively, destination device **420** may decrypt the CA-protected content **425** and re-encrypt the content to produce a DRM-protected content **435** and update DRM license **430** with the appropriate usage rights interpreted from CPI **415** and the key(s) associated with protected content **435**.

FIG. **4**B illustrates another example implementation for generating a content license **430** in accordance with CPI **415** in a similar manner as that described above with regard to FIG. **4**A. Receiver **410**, herein shown as a conditional access kernel (CAK), receives CAM **405** and CA-protected content **425** from the corresponding network operator via satellite, cable or other terrestrial means. Of course, receiver **410**, as previously mentioned, could be any number of CASD, e.g., smart card kernel. Receiver **410** sends CPI **415** to DRM destination device **420**. In addition, receiver **410** decrypts the CA-protected content **425** using conventional CA scheme and the information provided within CAM **405**. Accordingly, receiver **410** may send the unencrypted content **440** to the destination device or re-encrypt the content in accordance with the DRM scheme recognized by destination device **420** and send the encrypted content **435** to it **420**. In any event, destination device **420** will produce a DRM license **430** and can encrypt the content **440** if received unencrypted or simply use the received encrypted content **435** and update the DRM license **430** with the appropriate keys.

FIG. **4**C illustrates another example implementation for producing a content license **430** used to consume content **425**, **435** in accordance with usage rights defined by CPI in a CA system. Again, receiver **410**, which is a CASD, e.g., CAK, SCK, etc., receives CAM **405** and CA-protected content **425**. In this implementation, however, receiver **410** is capable of producing or generating DRM license **430** and sending such license **430** to the destination DRM device **420**. In this particular implementation, receiver **410** also sends CA-protected content **425** "as is" to the destination device **420**. The destination device **420** may then decrypt the protected content **425**, re-encrypt the content in accordance with DRM schemes to produce protected content **435** and update the DRM license **430** with the appropriate content protection key(s). Alternatively, receiver **410** could have included the appropriate keys (e.g., a list of CWs) in DRM license **430** when sent to destination device **420**, such that destination device **420** can use the DRM license **430** to decrypt the CA-protected content **425** in it's original form. Another example embodiment provides that the destination device **420**, or of course some remote device not shown, can update the content license **430** with the appropriate CA keys in order to consume the CA-protected content **425**.

In yet another example implementation, shown in FIG. **4**D, receiver **410**, shown here as SCK, receives the CAM **405** and protected content **425**, decrypts the CA-protected content **425** and re-encrypts the content in accordance with the DRM scheme to produce encrypted content **435***a*. Further, receiver **410** also uses CPI to produce the DRM content license #**1** (**430***a*). DRM license #**1** (**430***a*) and protected content **435***a* can then be sent to the destination device **420**. Thereafter, the destination device **420** can use DRM license #**1** (**430***a*) to consume the re-encrypted content **435***a*, or can use the usage rights information within the DRM license #**1** (**430***a*) to produce a second DRM license #**2** (**430***b*) and further decrypt the original re-encrypted content **435***a* and produce another encrypted version **435***b* to which license #**2** (**430***b*) is associated.

FIG. **4**E illustrates another example implementation, wherein receiver **410** receives CA information **405** and protected content **425**. Receiver **410** uses a secure kernel, shown here as CAK, and CPI to produce DRM license **430**. In addition, this example implementation shows receiver **410** decrypting the content to produce content **440**, which can then be sent along with the DRM license **430** to the destination device **420**. Thereafter, the destination device **420** encrypts content **440** to produce encrypted content **435** and updates the received DRM license **430** with the appropriate encryption key(s).

FIG. **4**F illustrates yet another example embodiment and implementation, wherein receiver **410** receives not only the CAM **405** and CA-encrypted content **425**, but also receives a DRM license **430** over the transport stream, or parallel with, from a network operator or other trusted source. This license **430** may be received before, after or during the receipt of the protected content **425**. The DRM license **430**, however, should somehow be linked to the content. For example, the content may be linked to the DRM license **430** by a common identifier associated with both. Alternatively, the two may be linked by a bridging mechanism or message, e.g., CAM **405**, which has identifiers for both the license **430** and the content **425**. In any event, once received, receiver **410** passes the DRM license **430** and the protected content **425** to the destination device **420**. In this example embodiment, destination device **420** can use the DRM license **430** to consume the conditional access-protected content **425** in its original form.

In another embodiment, the CAM **405** may be received at the receiver **410** and delivered to the destination device **420**. In such case, the destination device will supply the CAM **405** to a DRM license server or service (not shown), which can then generate, and send back to the destination device **420**, the DRM license **430** (in accordance with the usage rights defined). The DRM license **430** may be used in decrypting either the conditional access content **425** or protected content subsequently created based on the conditional access content and usage rights when generating the DRM license in the DRM service. The DRM license **430** (and the protected content) may be distributed to the destination device **420** either directly or indirectly through any of the possible ways described herein.

FIG. **4**G shows an alternative to the above-illustrated receipt of a DRM license via a transport stream. In this

embodiment, receiver **410** receives ECM and EMM **405**, CA-protected content **425** and a first DRM license **430***a* over the transport stream, which it then forwards to destination device **420**. Thereafter, destination device uses its secure kernel and the first DRM license **430***a* to decrypt CA-protected content **425**. This unencrypted content can then be re-encrypted to produce encrypted content **435**. In addition, CPI from the first DRM license **430***a* can be used to produce a second DRM license **430***b*, which will include at least the usage rights from the first DRM license **430***a*. Further, the second DRM license **430***b* can be updated with the appropriate encryption key(s).

FIG. **4**H illustrates a similar example implementation as that described above with regard to FIG. **4**G; however, receiver **410** decrypts CA-protected content **425** to produce unencrypted content **440**, which it then sends along with the first DRM license **430***a* to destination device **420**. Thereafter, destination device **420** produces encrypted content **435** and also creates a second DRM license **430***b* with the corresponding updated key(s).

In yet another example embodiment and implementation, FIG. **4**I illustrates how the CA information can be packaged and sent to destination device **420**. In this example implementation and embodiment, receiver **410** receives CAM **405** and protected content **425**, which it packages as package data **445**, which is then sent to destination device **420**. The packaged data may include, for example, CPI information and other information understood by the destination device **420** sufficient to produce the appropriate DRM license **430**.

The following illustrates how the destination device **420** may use the package data **445** to produce the appropriate DRM content license **430** and subsequently consume content **425**, **435**. For example, as shown in FIG. **4**J, destination device **420** receives package data **445** that includes, among other data, ECM and EMM **405**. The CA-protected content **435** can also be sent to the destination device **420** by receiver **410**. Thereafter, destination device **420** uses CPI information, sent in the package data **445**, or received from a remote source (not shown), or otherwise known to the destination device **420**, to produce content license **430**. Further, destination device **420** can either update DRM content license **430** with the CW keys used for decrypting CA-protected content **425**, or in the alternative can decrypt protected content **425** and re-encrypt using DRM keys to produce encrypted content **435** and update DRM license **430** accordingly.

FIG. **4**K illustrates another example of receiver **410** packaging data **445**, which includes the CAM **405** and the CA-protected content **425**, among other information. Destination device **420** understands how to deal with the package data **445** and can use this and other information, such as CPI, to produce DRM license **430** and the appropriate DRM-protected content **435**. Similarly, FIG. **4**L illustrates how the conditional access secured device **410** receives the appropriate ECM and EMM **405** and CA-protected content **425** to produce package data **445** that includes the appropriate CPI **415** and CA-protected content **425** and sends this to destination device **420**, which can then produce the appropriate content license **430** and subsequently consume content in accordance with various methods as aforementioned.

The present invention may also be described in terms of methods comprising functional steps and/or non-functional acts. The following is a description of acts and steps that may be performed in practicing the present invention. Usually, functional steps describe the invention in terms of results that are accomplished, whereas non-functional acts describe more specific actions for achieving a particular result. Although the functional steps and non-functional acts may be described or claimed in a particular order, the present invention is not necessarily limited to any particular ordering or combination of acts and/or steps.

FIG. **5** illustrates example steps and acts used to produce a content license for consuming content in accordance with usage rights defined by a content protection scheme, although the content originated from a different content protection scheme. As shown, conditional access-protected content and content protection information are received in acts **510** and **520**, respectively. The conditional access-protected content is broadcast to a plurality of receivers and encrypted by a plurality of intermittent updated keys. Further, the content protection information includes information used to determine, manage and enforce usage rights associated with the conditional access-protected content.

Also shown in FIG. **5**, a step for determining **535** usage rights may include the acts of interpreting **530** CA content protection information. The usage rights are defined by a content provider, and specify how and under what conditions content may consumed at a destination device.

A step for providing **545** digital rights management keys may include the act of producing **540** a content license used for enforcing digital rights within the destination device. Of course, information within the license is based upon the interpreted conditional access content protection information and in accordance with usage rights.

As previously mentioned, the two security kernels, that is the receiving device and destination device, may be bound through secret information which may be stored in various ways. As such, the aforementioned steps and acts may also include an act of authenticating that the destination device is a trusted device for establishing a secure communication channel between a receiver of the conditional access protected content and the destination device. In addition, as described above, the location of where the content protection information is interpreted and received, and where the content license is produced can vary in accordance with any one or more of the aforementioned implementations.

In accordance with other exemplary embodiments of the present invention, and as illustrated in FIG. **6**, a method of consuming protected content using a license that defines usage rights within a content protection scheme different from the originating protection scheme is available. The process receives **610** conditional access-protected content broadcast to a plurality of receivers and encrypted by a plurality of intermittent updated keys. Further, the act of receiving **620** a digital rights license that includes information that specifies how and under what conditions the conditional access-protected content may be consumed at a destination device is performed. The digital rights license also includes at least a portion of the plurality of intermittent updated keys. Finally, the digital rights license may be used **630** for decrypting the conditional access-protected content at a destination device that uses a digital rights protection scheme to consume content.

The destination device may subsequently encrypt the decrypted conditional access-protected content using one or more digital rights management keys in accordance with usage rights, which define how and under what conditions content may be consumed at the destination device. Other example embodiments provide the usage rights are at default value defined in a secure device within the receiving device. Alternatively, the usage rights could be a default value defined in a secure library within the destination device. Further, the usage rights could be a default value defined within a device separate from the receiving device and the destination device.

Embodiments within the scope of the present invention also include computer-readable media for carrying or having computer-executable instructions or data structures stored thereon. Such computer-readable media can be any available media that can be accessed by a general purpose or special purpose computer. By way of example, and not limitation, such computer-readable media can comprise RAM, ROM, EEPROM, CD-ROM or other optical disk storage, magnetic disk storage or other magnetic storage devices, or any other medium which can be used to carry or store desired program code means in the form of computer-executable instructions or data structures and which can be accessed by a general purpose or special purpose computer. When information is transferred or provided over a network or another communications connection (either hardwired, wireless, or a combination of hardwired or wireless) to a computer, the computer properly views the connection as a computer-readable medium. Thus, any such connection is properly termed a computer-readable medium. Combinations of the above should also be included within the scope of computer-readable media. Computer-executable instructions comprise, for example, instructions and data which cause a general purpose computer, special purpose computer, or special purpose processing device to perform a certain function or group of functions.

FIG. **7** and the following discussion are intended to provide a brief, general description of a suitable computing environment in which the invention may be implemented. Although not required, the invention will be described in the general context of computer-executable instructions, such as program modules, being executed by computers in network environments. Generally, program modules include routines, programs, objects, components, data structures, etc. that perform particular tasks or implement particular abstract data types. Computer-executable instructions, associated data structures, and program modules represent examples of the program code means for executing steps of the methods disclosed herein. The particular sequence of such executable instructions or associated data structures represents examples of corresponding acts for implementing the functions described in such steps.

Those skilled in the art will appreciate that the invention may be practiced in network computing environments with many types of computer system configurations, including personal computers, hand-held devices, multi-processor systems, microprocessor-based or programmable consumer electronics, network PCs, minicomputers, mainframe computers, and the like. The invention may also be practiced in distributed computing environments where tasks are performed by local and remote processing devices that are linked (either by hardwired links, wireless links, or by a combination of hardwired or wireless links) through a communications network. In a distributed computing environment, program modules may be located in both local and remote memory storage devices.

With reference to FIG. **7**, an exemplary system for implementing the invention includes a general purpose computing device in the form of a conventional computer **720**, including a processing unit **721**, a system memory **722**, and a system bus **723** that couples various system components including the system memory **722** to the processing unit **721**. The system bus **723** may be any of several types of bus structures including a memory bus or memory controller, a peripheral bus, and a local bus using any of a variety of bus architectures. The system memory includes read only memory (ROM) **724** and random access memory (RAM) **725**. A basic input/output system (BIOS) **726**, containing the basic routines that help transfer information between elements within the computer **720**, such as during start-up, may be stored in ROM **724**.

The computer **720** may also include a magnetic hard disk drive **727** for reading from and writing to a magnetic hard disk **739**, a magnetic disk drive **728** for reading from or writing to a removable magnetic disk **729**, and an optical disk drive **730** for reading from or writing to removable optical disk **731** such as a CD-ROM or other optical media. The magnetic hard disk drive **727**, magnetic disk drive **728**, and optical disk drive **730** are connected to the system bus **723** by a hard disk drive interface **732**, a magnetic disk drive-interface **733**, and an optical drive interface **734**, respectively. The drives and their associated computer-readable media provide nonvolatile storage of computer-executable instructions, data structures, program modules and other data for the computer **720**. Although the exemplary environment described herein employs a magnetic hard disk **739**, a removable magnetic disk **729** and a removable optical disk **731**, other types of computer readable media for storing data can be used, including magnetic cassettes, flash memory cards, digital versatile disks, Bernoulli cartridges, RAMs, ROMs, and the like.

Program code means comprising one or more program modules may be stored on the hard disk **739**, magnetic disk **729**, optical disk **731**, ROM **724** or RAM **725**, including an operating system **735**, one or more application programs **736**, other program modules **737**, and program data **738**. A user may enter commands and information into the computer **720** through keyboard **740**, pointing device **742**, or other input devices (not shown), such as a microphone, joy stick, game pad, satellite dish, scanner, or the like. These and other input devices are often connected to the processing unit **721** through a serial port interface **746** coupled to system bus **723**. Alternatively, the input devices may be connected by other interfaces, such as a parallel port, a game port or a universal serial bus (USB). A monitor **747** or another display device is also connected to system bus **723** via an interface, such as video adapter **748**. In addition to the monitor, personal computers typically include other peripheral output devices (not shown), such as speakers and printers.

The computer **720** may operate in a networked environment using logical connections to one or more remote computers, such as remote computers **749***a* and **749***b*. Remote computers **749***a* and **749***b* may each be another personal computer, a server, a router, a network PC, a peer device or other common network node, and typically include many or all of the elements described above relative to the computer **720**, although only memory storage devices **750***a* and **750***b* and their associated application programs **736***a* and **736***b* have been illustrated in FIG. **7**. The logical connections depicted in FIG. **7** include a local area network (LAN) **751** and a wide area network (WAN) **752** that are presented here by way of example and not limitation. Such networking environments are commonplace in office-wide or enterprise-wide computer networks, intranets and the Internet.

When used in a LAN networking environment, the computer **720** is connected to the local network **751** through a network interface or adapter **753**. When used in a WAN networking environment, the computer **720** may include a modem **754**, a wireless link, or other means for establishing communications over the wide area network **752**, such as the Internet. The modem **754**, which may be internal or external, is connected to the system bus **723** via the serial port interface **746**. In a networked environment, program modules depicted relative to the computer **720**, or portions thereof, may be stored in the remote memory storage device. It will be appre-

ciated that the network connections shown are exemplary and other means of establishing communications over wide area network **752** may be used.

The present invention may be embodied in other specific forms without departing from its spirit or essential characteristics. The described embodiments are to be considered in all respects only as illustrative and not restrictive. The scope of the invention is, therefore, indicated by the appended claims rather than by the foregoing description. All changes which come within the meaning and range of equivalency of the claims are to be embraced within their scope.

We claim:

1. In an entertainment media environment, a method of producing a content license used to consume content in accordance with usage rights defined by a content protection scheme, although the content originated from a different content protection scheme, the method comprising the acts of:

receiving conditional access protected content broadcast to a plurality of receivers and encrypted by a plurality of intermittent updated keys;

receiving conditional access content protection information that includes information used to determine, manage and enforce usage rights associated with the conditional access protected content;

interpreting the conditional access content protection information for determining the usage rights defined by a content provider, which specify how and under what conditions content may be consumed at a destination device;

decrypting the conditional access protected content using the plurality of intermittent updated keys to produce consumable content;

based on the interpreted conditional access content protection information, producing a content license used for enforcing digital rights within the destination device by providing one or more digital rights management keys in accordance with the usage rights; and

encrypting the consumable content using the one or more digital rights management keys, wherein the one or more digital rights management keys are not included within the consumable content.

2. The method of claim **1**, further including the act of:

authenticating that the destination device is a trusted device for establishing a secure communication channel between a receiver of the conditional access protected content and the destination device.

3. The method of claim **2**, wherein the receiver is a conditional access secure device, which sends the conditional access content protection information and the conditional access protected content to the destination device, and wherein the destination device interprets the conditional access content protection information and produces the content license.

4. The method of claim **3**, wherein the one or more digital rights management keys includes at least a portion of the plurality of intermittent updated keys.

5. The method of claim **2**, wherein the receiver decrypts the conditional access protected content using the plurality of intermittent updated keys to produce consumable content and sends the conditional access content protection information to the destination device, which interprets the conditional access content protection information and produces the content license.

6. The method of claim **5**, wherein the receiver sends the consumable content to the destination device, which encrypts the consumable content using the one or more digital rights management keys.

7. The method of claim **5**, wherein the receiver encrypts the consumable content using the one or more digital rights management keys and sends the encrypted consumable content to the destination device.

8. The method of claim **5**, wherein the receiver is at least one of a smart card or a secured chip and wherein the destination device includes a secured library software for interpreting the conditional access content protection information.

9. The method of claim **1**, wherein the receiver decrypts the conditional access protected content using the plurality of intermittent updated keys to produce consumable content and sends the conditional access content protection information to the destination device, which sends the content protection information and a request for the content license to a license server that interprets the conditional access content protection information and produces the content license.

10. The method of claim **1**, wherein the receiver produces the content license and sends the content license and the conditional access protected content to the destination device.

11. The method of claim **10**, wherein the destination device decrypts the conditional access content protection information using the plurality of intermittent updated keys to produce consumable content, and then encrypts the consumable content using the one or more digital rights management keys.

12. The method of claim **10**, wherein the one or more digital rights management keys includes at least a portion of the plurality of intermittent updated keys.

13. The method of claim **1**, wherein the receiver is within the destination device.

14. In an entertainment media environment, a method of producing a content license used to consume content in accordance with usage rights defined by a content protection scheme, although the content originated from a different content protection scheme, the method comprising:

an act of receiving conditional access protected content broadcast to a plurality of receivers and encrypted by a plurality of intermittent updated keys;

an act of receiving conditional access content protection information that includes information used to determine, manage and enforce usage rights associated with the conditional access protected content;

a step for determining the usage rights through the interpretation of the conditional access content protection information, the usage rights specifying how and under what conditions content may be consumed at a destination device;

an act of decrypting the conditional access protected content using the plurality of intermittent updated keys to produce consumable content;

a step for enforcing digital rights within the destination device by producing a content license in accordance with the interpreted conditional access content protection information, the content license including one or more digital rights management keys; and

an act of encrypting the consumable content using the one or more digital rights management keys, wherein the one or more digital rights management keys are not included within the consumable content.

15. The method of claim **14**, further including the act of:

authenticating that the destination device is a trusted device for establishing a secure communication channel between a receiver of the conditional access protected content and the destination device.

16. The method of claim **14**, wherein the destination device consumes the content using the content license.

17. The method of claim **14**, wherein the destination device decrypts the consumable content, produces a second content license in accordance with usage rights defined in the content

license, and encrypts the decrypted consumable content using a second one or more digital rights management keys.

18. The method of claim **14**, wherein the receiver decrypts the conditional access protected content using the plurality of intermittent updated keys to produce consumable content, interprets the conditional access content protection information to produces the content license, and sends the content license and consumable content to the destination device, which encrypts the consumable content using the one or more digital rights management keys.

19. The method of claim **14**, wherein the receiver decrypts the conditional access protected content using the plurality of intermittent updated keys to produce consumable content, sends the conditional access content protection information to a content license server, receives the content license from the content server, and sends the content license and consumable content to the destination device, which encrypts the consumable content using the one or more digital rights management keys.

20. The method of claim **19**, wherein the encrypted content and content license are stored in a storage device for future use when consuming the consumable content.

21. For an entertainment media environment, a computer program product comprising one or more computer readable media carrying computer executable instructions that implement a method of producing a content license used to consume content in accordance with usage rights defined by a content protection scheme, although the content originated from a different content protection scheme, the method comprising the acts of:

receiving conditional access protected content broadcast to a plurality of receivers and encrypted by a plurality of intermittent updated keys;

receiving conditional access content protection information that includes information used to determine, manage and enforce usage rights associated with the conditional access protected content;

interpreting the conditional access content protection information for determining the usage rights defined by a content provider, which specify how and under what conditions content may be consumed at a destination device;

decrypting the conditional access protected content at the destination device using the plurality of intermittent updated keys to produce consumable content;

sending the conditional access content protection information to a remote content license server, wherein the content license server produces a content license used for enforcing digital rights within the destination device by providing one or more digital rights management keys in accordance with the usage rights;

receiving the content license from the remote license server; and

encrypting the consumable content using the one or more digital rights management keys, wherein the one or more digital rights management keys are not included within the consumable content.

22. The computer program product of claim **21**, further including the act of:

authenticating that the destination device is a trusted device for establishing a secure communication channel between a receiver of the conditional access protected content and the destination device.

23. The computer program product of claim **22**, wherein the receiver sends the package of data to the destination device, which interprets the packaged data and produces the content license.

24. The computer program product of claim **23**, wherein the receiver is a conditional access secure device of either a conditional access kernel or a smart card kernel.

25. The computer program product of claim **24**, wherein the destination device is a computer that includes a secure library for interpreting the packaged data.

26. The computer program product of claim **25**, wherein the packaged data includes the plurality of intermittent updated keys.

27. The computer program product of claim **26**, wherein the packaged data includes the conditional access encrypted content.

28. The computer program product of claim **26**, wherein the packaged data includes the conditional access content protection information.

29. The computer program product of claim **26**, wherein the conditional access content protection information is a default value included in the secure library of the computer.

30. The computer program product of claim **26**, wherein the conditional access content protection information is defined in a device separate from the conditional access secure device and the computer.

31. In an entertainment media environment, a method of consuming protected content using a license that defines usage rights within a content protection scheme different from the originating protection scheme, the method comprising the acts of:

receiving conditional access protected content broadcast to a plurality of receivers and encrypted by a plurality of intermittent updated keys;

receiving a digital rights license that includes information that specifies how and under what conditions the conditional access protected content may be consumed at a destination device, and which also includes at least a portion of the plurality of intermittent updated keys;

using the digital rights license for decrypting the conditional access protected content at a destination device that uses a digital rights protections scheme to consume content; and

encrypting the decrypted conditional access protected content using one or more digital rights management keys in accordance with usage rights, wherein the one or more digital rights management keys are not included within the consumable content and define how and under what conditions content may be consumed at the destination device.

32. The method of claim **31**, wherein the usage rights are a default value defined in a secure device within the receiving device.

33. The method of claim **31**, wherein the usage rights are a default value defined in a secure library within the destination device.

34. The method of claim **31**, wherein the digital rights license is generated at a server based upon conditional access messages received, and wherein the digital rights license is subsequently received by the destination device for consuming the conditional access protected content.

35. The method of claim **31**, wherein the digital rights license is received in a parallel path along with the broadcasted conditional access protected content, the digital rights license being received before, after or during the receipt of the conditional access protected content, and wherein the digital rights license is linked to the conditional access protected content by an identifier or bridged through conditional access messages.

* * * * *