US 20030078891A1

(19) United States

(12) Patent Application Publication

(10) Pub. No.: US 2003/0078891 A1

(43) Pub. Date: Apr. 24, 2003

Capitant

(54) SYSTEMS AND METHODS FOR PROVIDING DIGITAL RIGHTS MANAGEMENT COMPATIBILITY

(76) Inventor: **Patrice J. Capitant**, Los Altos, CA (US)

Correspondence Address:
FRANK NGUYEN
1341 ORLEANS DRIVE
SUNNYVALE, CA 94089 (US)

(21) Appl. No.: 10/272,771

(22) Filed: Oct. 17, 2002

Related U.S. Application Data

(60) Provisional application No. 60/347,916, filed on Oct. 18, 2001.

Publication Classification

(51) Int. Cl.[7] G06F 17/60

(52) U.S. Cl. 705/57

(57) ABSTRACT

A digital rights management (DRM) system includes one or more conditional access devices (such as copy control information (CCI) compliant devices); one or more license (L) compliant devices adapted to interoperate with the one or more conditional access devices, each L-compliant device and conditional access device sharing a common content access protocol and access information, and an initiator coupled to the one or more L-compliant devices to initialize one or more of the L-compliant devices.

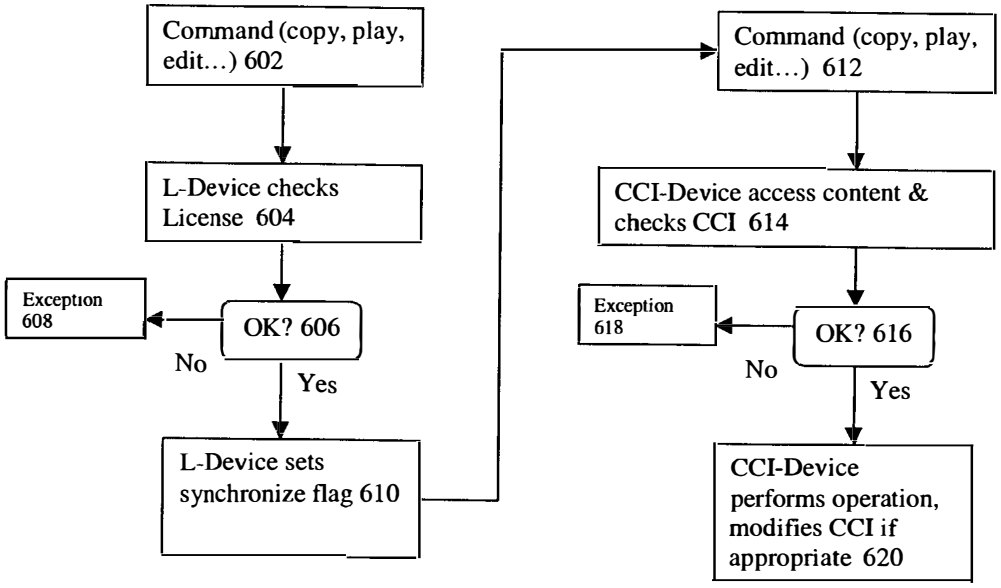

Hisense Ex. 1012
Hisense v. VideoLabs
IPR2025-00880

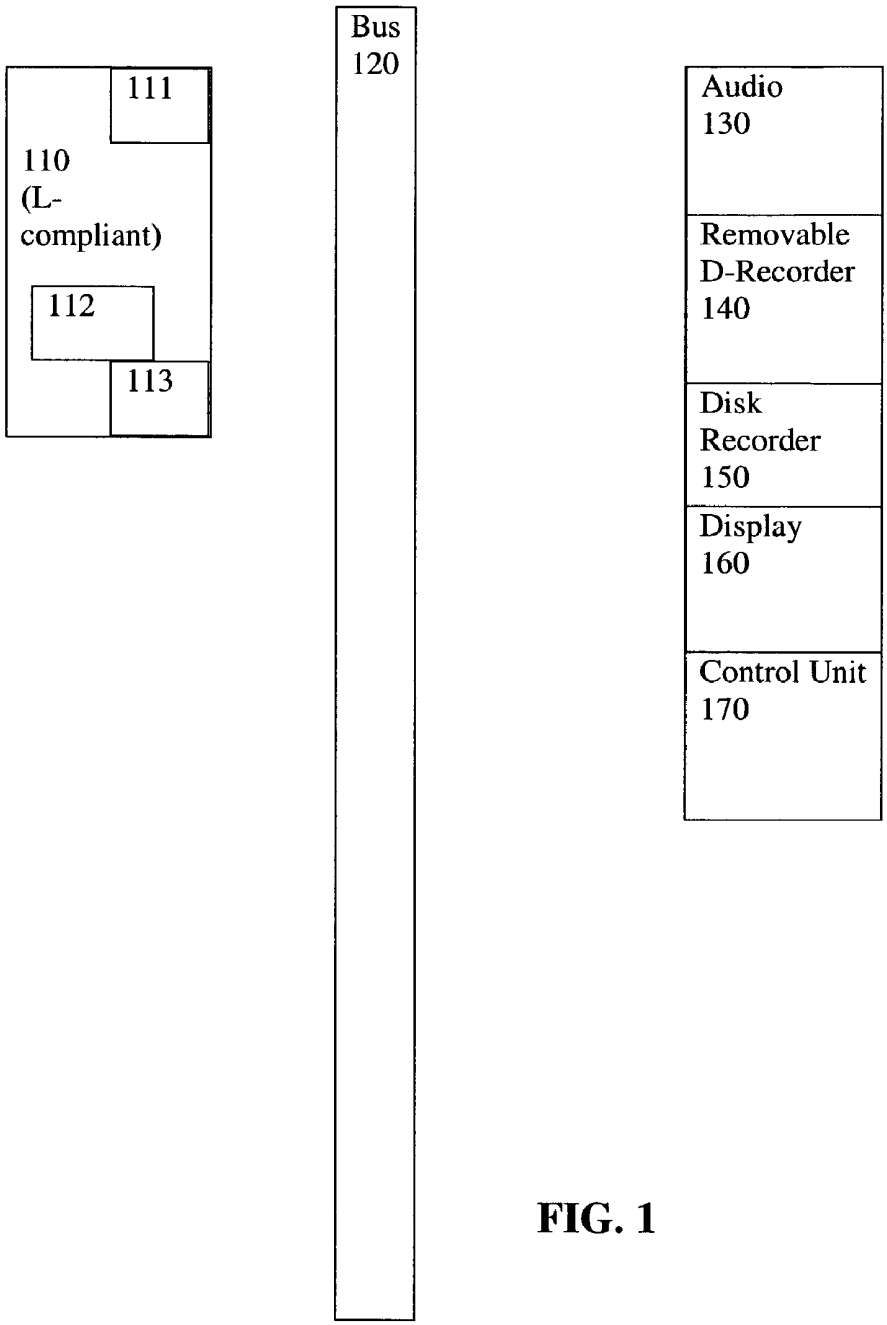
111
110
(L-
compliant)
112
113
Bus
120
Audio
130
Removable
D-Recorder
140
Disk
Recorder
150
Display
160
Control Unit
170

FIG. 1

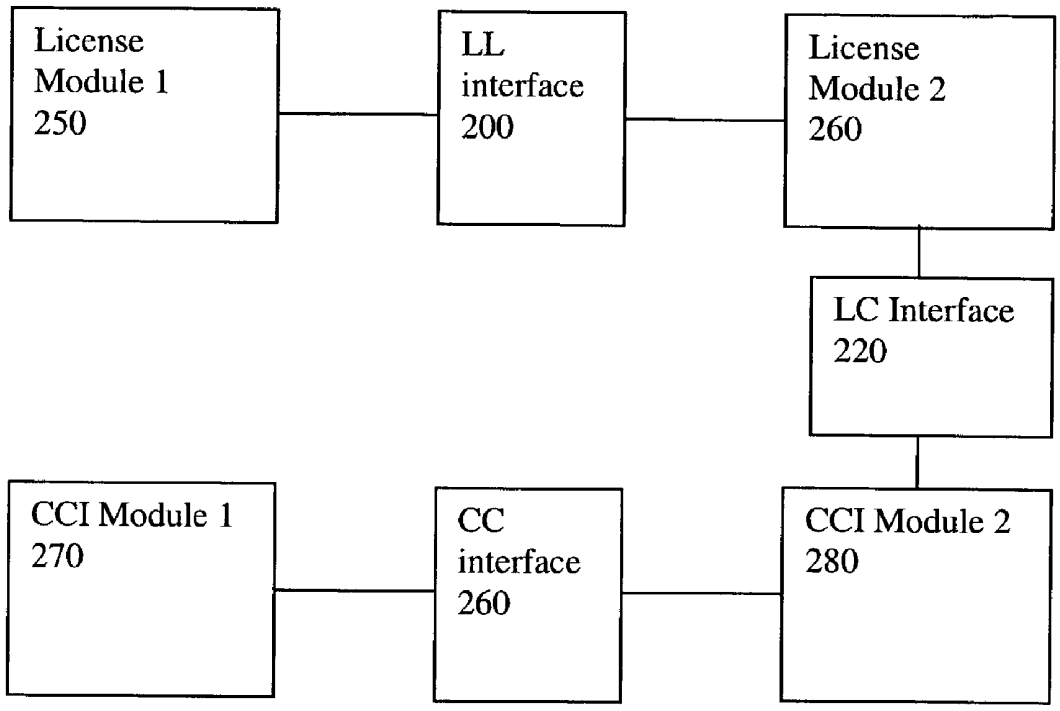
License
Module 1
250
LL
interface
200
License
Module 2
260
LC Interface
220
CCI Module 1
270
CC
interface
260
CCI Module 2
280

FIG. 2

if the synchronization flag has been set, L-system either acquires the CCI-system DRM information or ensure that no CCI system DRM information exists (302).
L-system DRM information included in the license is compared to the retrieved CCI system DRM information and adjusted to match the DRM information (304).
If matching cannot be done in accordance with the criteria, invoke exception procedures (306).
If matching can be done, the synchronization flag is reset (308).

FIG. 3

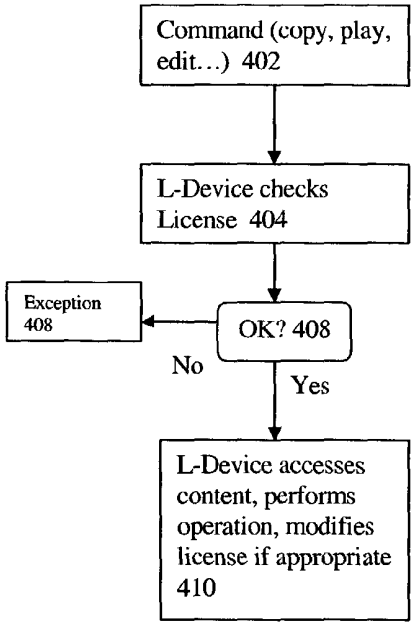
Command (copy, play, edit...) 402
L-Device checks License 404
Exception 408
OK? 408
No
Yes
L-Device accesses content, performs operation, modifies license if appropriate 410

FIG. 4

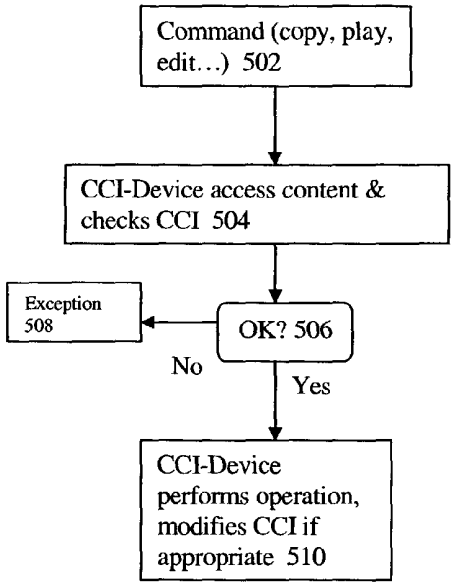
Command (copy, play, edit...) 502
CCI-Device access content & checks CCI 504
Exception 508
OK? 506
No
Yes
CCI-Device performs operation, modifies CCI if appropriate 510

FIG. 5

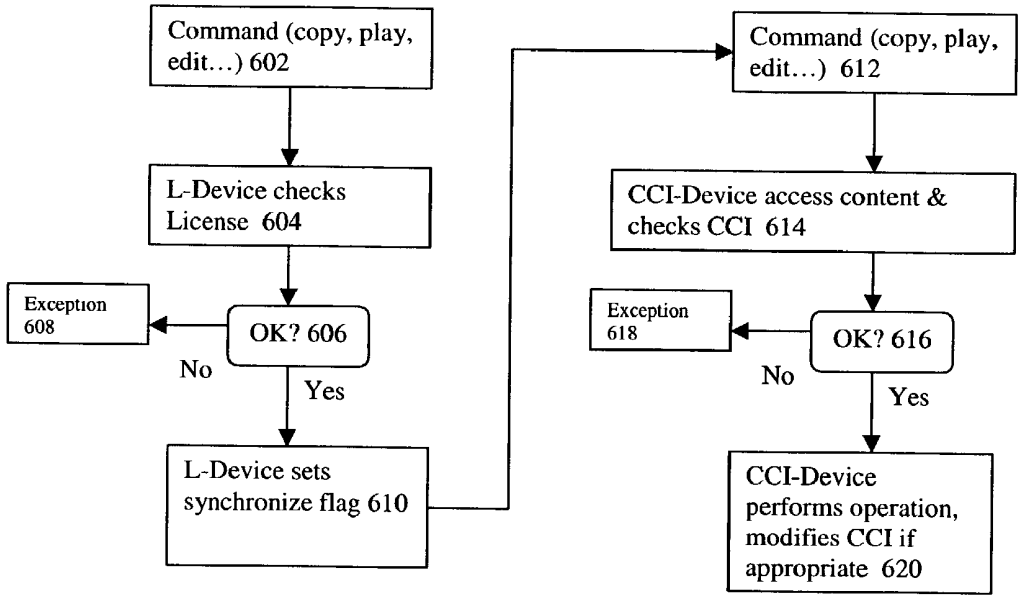
Command (copy, play, edit...) 602
L-Device checks License 604
OK? 606
Exception 608
No
Yes
L-Device sets synchronize flag 610
Command (copy, play, edit...) 612
CCI-Device access content & checks CCI 614
OK? 616
Exception 618
No
Yes
CCI-Device performs operation, modifies CCI if appropriate 620

FIG. 6

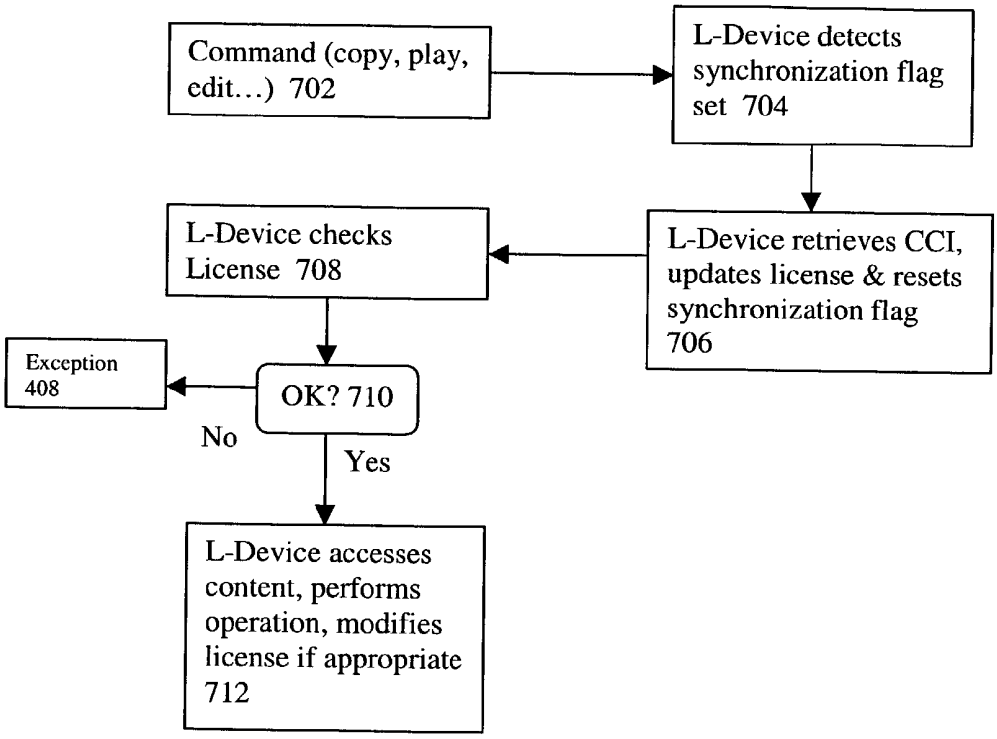
Command (copy, play, edit...) 702
L-Device detects synchronization flag set 704
L-Device retrieves CCI, updates license & resets synchronization flag 706
L-Device checks License 708
OK? 710
Exception 408
No
Yes
L-Device accesses content, performs operation, modifies license if appropriate 712

FIG. 7

SYSTEMS AND METHODS FOR PROVIDING DIGITAL RIGHTS MANAGEMENT COMPATIBILITY

[0001] This application claims the benefit of Provisional Application No. 60/347,916, filed Oct. 18, 2001.

BACKGROUND

[0002] This invention relates to the compatibility between Digital Rights Management (DRM) systems.

[0003] The communications industry is shifting from traditional analog to digital technology. High-definition television (HDTV) broadcasts have begun in most major cities, and the rapid adoption of the Internet and the World Wide Web has resulted in a corresponding increase in downloadable audio-visual files, such as MP3-formatted audio files, as well as other content. In parallel, low-cost and high-capacity digital recording devices such as digital versatile disk (DVD) recorders, digital VHS video cassette recorders (D-VHS VCR), CD-ROM recorders (e.g., CD-R and CD-RW), MP3 recording devices, and hard disk-based recording units have appeared.

[0004] These digital recording devices are capable of producing high quality recordings and copies thereof, without the generational degradation (i.e., increased degradation between successive copies) known in the analog counterparts. Since these recording devices can be used to perform unauthorized and uncontrolled copying of copyrighted, or otherwise protected, material, content providers such as the motion picture and music industries use copy protection to prevent unauthorized users from viewing the information and making unauthorized reproductions of the works.

[0005] In the digital era, the problem of copyright piracy is more significant than ever. As a result, DRM technology has been developed and commonly refers to technical measures that help companies and individuals manage their rights in digital content. In practice, the term is often applied broadly to almost any security measure that protects digital content, including access and copy control mechanisms. DRM refers to a variety of technologies designed to balance consumers' rights in enjoying copyrighted works while concurrently preventing the piracy of those works.

[0006] A number of DRM systems have been developed to protect against unauthorized transmission of protected multimedia material between digital devices such as personal computers (PCs), digital video disk (DVD) Players, and digital televisions. The multimedia content can be software, game, video, presentations, pictures, movies, sound clips, among others.

[0007] One established DRM solution uses conditional access (CA) technology. Typically, each CA device performs a combination of scrambling and encryption to prevent unauthorized use, for example, reception of information. Scrambling is the process of rendering sound, pictures and/or data, etc. unintelligible. Encryption is the process of protecting the secret keys (control words) which have to be transmitted with the scrambled signal for the descrambler to operate, that is, to descramble the scrambled signal. At the transmitting side, a multiplexer multiplexes picture, sound and data information and generates an MPEG-2 transport stream. The MPEG transport stream is forwarded to a scrambler. After scrambling and modulation, the signal is transmitted to the receiving side where the signal is demodulated, descrambled and demultiplexed. In one CA embodiment, Copy Control Information (CCI) such as usage constraints (allowed rights) is embedded in the content and these constraints are subsequently enforced by CCI compliant devices such as set-top boxes.

[0008] However, CA technology is rooted in pay-per-view broadcast applications and as such, does not flexibly accommodate users' needs. For example, CA technology does not allow consumers who lawfully acquire digital media to continue to have both the right and the easy ability to make copies of that material for their own noncommercial use, convenience and enjoyment. CA technology also does not provide users with the ability to transfer the content they have lawfully acquired among digital devices in the home and in the extended home environment.

[0009] A more recent DRM system uses licenses that specify the usage constraints in a license or certificate and enforced by License compliant (L-compliant) devices such as personal computers. L-compliant system provides flexibility for users while protecting content provider's interests. However, CA and license-based DRM systems are not compatible with each other. As a result, operators as well as users can be inconvenienced by incompatibility among communication equipment.

SUMMARY

[0010] In one aspect, a digital rights management (DRM) system includes one or more license (L) compliant devices adapted to interoperate with each other, the devices sharing content through a common access protocol and access information, and an initiator directly connected to or remotely linked to the one or more L-compliant devices to initialize one or more of the L-compliant devices.

[0011] Implementations of the above aspect may include one or more of the following. The conditional access device can be a copy control information (CCI) compliant device. The devices can process a license that can include an L-synchronization flag. The one or more conditional access devices provide a pass-through capability to pass the license to the one or more L-compliant devices. The license is expressed in a predetermined syntax such as a mark-up language. Each L-compliant device obtains DRM data if the L-compliant device and the conditional access device are not synchronized. The L-compliant device updates its DRM data according to the conditional access device DRM data.

[0012] In another aspect, a DRM system includes one or more conditional access devices adapted to pass through messages for one or more L-compliant devices, the devices sharing content through a common access protocol and access information; and an initiator coupled to the one or more L-compliant devices to initialize one or more of the L-compliant devices.

[0013] Implementations of this aspect may include one or more of the following. The conditional access device can be a copy control information (CCI) compliant device.

[0014] In another aspect, a DRM system includes one or more copy control information (CCI) compliant devices; one or more license (L) compliant devices adapted to interoperate with the one or more CCI compliant devices, each L-compliant device and CCI-compliant device sharing con-

tent using a common access protocol and access information, and an initiator coupled to the one or more L-compliant devices to initialize one or more of the L-compliant devices.

[0015] Implementations of the above aspect may include one or more of the following. Each CCI-compliant device provides a pass-through capability. Each CCI-compliant device passes a license to the one or more L-compliant devices. DRM data messages can be transmitted to the CCI-compliant devices and the L-compliant devices. Data messages can conform to one or more of the following: a common rights language syntax, a common syntax for transferring cryptographic data or access data, a common syntax for authentication status messages, a common syntax for revocation messages, a private data message syntax, and a syntax for communicating renewal information. The DRM data conforms to a common encryption method. Each L-compliant device obtains DRM data if the CCI-compliant device and the L-compliant device are not synchronized. The L-compliant device updates its DRM data to reflect CCI-compliant device DRM data.

[0016] In another aspect, a method for synchronizing one or more license (L)-compliant devices with one or more L-compliant devices in a digital rights management (DRM) system, includes sharing content through a common access protocol and access information for one or more devices capable of sharing content; determining whether one or more of the L-compliant devices and one or more of the conditional access devices are synchronized; and if one of the devices is not synchronized, updating L-compliant device DRM data to match conditional device DRM data.

[0017] Implementations of the above method may include one or more of the following. The conditional access devices can be CCI-compliant devices. One of the L-compliant devices receives a license indicative of access rights associated with a selected content. The methods can include resetting a synchronization flag in the license; determining whether the license authorizes the command; and throwing an exception if the command is unauthorized and otherwise setting a synchronization flag.

[0018] In yet another aspect, a method for synchronizing one or more conditional access-compliant devices with one or more L-compliant devices in a digital rights management (DRM) system, includes determining whether the conditional access-compliant devices and L-compliant devices are synchronized; and if not, updating the conditional access-compliant device DRM data to match the L-compliant device DRM data.

[0019] Implementations can include one or more of the following. A synchronization flag can be passed-through to one or more of the L-compliant devices. A license can also be passed to one or more of the L-compliant devices. The method can include receiving a user command for a selected content; checking a DRM data embedded in the selected content and determining whether the DRM data authorizes the user command; if not authorized, throwing an exception and if authorized, performing the user command, and updating the DRM data to reflect performance of the user command. The throwing an exception can include revoking access rights to the selected content.

[0020] In yet another aspect, a method for synchronizing one or more conditional access-compliant devices with one or more license (L)-compliant devices in a digital rights management (DRM) system, includes receiving a command from a user for a selected content; checking a license received for the selected content; determining whether the license authorizes the command; and throwing an exception if the command is unauthorized and otherwise setting a synchronization flag.

[0021] Implementations can include one or more of the following. The throwing an exception can include revoking the license or disabling future operations on the content. The command can be passed to the conditional access compliant device. The conditional access compliant device can be a copy control information (CCI) compliant device. CCI data embedded in a content stream can be checked for whether the CCI data authorizes the command. If the CCI data is acceptable, the CCI-compliant device accesses the content, performs the requested operation, and modifies the CCI data.

[0022] Advantages of the system may include one or more of the following. The system allows two or more equipment to exist or function in the same system or environment without mutual interference. A given content or program can be played by different types of devices without modification of the security or copyright protection protocol. The system also allows the substitution of the newer license-based DRM system, for the legacy CCI DRM system in a relatively transparent manner, without loss of information and without the introduction of errors. Thus, user experience is enhanced through product interoperability.

[0023] Other advantages include one or more of the following. The system works with a variety of delivery means, including unprotected, protected (such as Conditional Access System (CAS) and/or Digital Rights Management (DRM)) and pre-recorded media. The system works with traditional protection mechanism such as a Residential Gateway (RG) or Set Top Box (STB) border device using a Conditional Access (CA) system (and possibly across a Common Interface (CI)) into the DRM environment. The system also works with cases where the content enters through an unprotected environment (e.g. over a free-to-air public broadcast) before entering the CPCM environment. Regardless of how the content enters the consumer's authorized domain, the system provides end-to-end protection of the content and its related Usage States through the point of consumption by the end user. For both CAS and DRM technologies, the system supports the four copy control usage states of Copy Control Not Asserted, Copy Once, Copy No More, and Copy Never. In addition, the system can indicate whether content may be Moved for Consumption outside the consumer's authorized domain and the necessary protection mechanism for supporting this function. The authorized domain may also include devices not physically attached to the digital home network (e.g. portable entertainment device or remotely connected device).

[0024] Moreover, the system is compatible with legacy analogue devices by supporting the protection of content, to the extent possible, flowing across both analogue and digital interfaces between devices within the consumer's authorized domain. Additionally, the system supports a standardized digital interface at a logical level, establishing mutual trust between devices that allows protected content, Usage State information, and the control of content usage to be

securely exchanged between two or more DRM compliant devices, regardless of whether they are CCI compliant or L-compliant.

BRIEF DESCRIPTION OF THE FIGURES

[0025] **FIG. 1** is a diagram depicting an exemplary environment with multiple DRM compliant systems, including CCI-compliant device(s) and L-compliant device(s).

[0026] **FIG. 2** is a block diagram depicting an application programming interface.

[0027] **FIG. 3** is a flowchart illustrating synchronization between a CCI-compliant device and an L-compliant device.

[0028] **FIG. 4** shows an exemplary process on the L-compliant device.

[0029] **FIG. 5** shows an exemplary process on the C-compliant device.

[0030] **FIG. 6** shows an exemplary process on the L-compliant device hand-off operation.

[0031] **FIG. 7** shows an exemplary process illustrating an L-compliant device regaining control of content from a CCI-compliant device.

DESCRIPTION

[0032] **FIG. 1** shows an exemplary environment for an entertainment system **100** with a plurality of compatible DRM products. The system **100** has a plurality of devices **110-170** that can conform to one or more DRM systems including conditional access devices (such as CCI-compliant devices) as well as L-compliant devices. These devices are responsive to the interface shown in **FIG. 2** and execute processes shown in FIGS. **3-7** to provide compatibility between CCI-compliant devices and L-compliant devices.

[0033] The entertainment system **100** includes a digital device **110** for receiving a digital bitstream including program data from one or more service providers. Such service or content providers can include terrestrial broadcasters, cable operators, direct broadcast satellite (DBS) companies, companies providing content for download via the Internet, or any similar such content and/or service provider. The program data may include system information, entitlement control messages, entitlement management messages, content, and other data. System information may include information on program names, time of broadcast, source, and a method of retrieval and decoding, and well as copy management commands that provide digital receivers and other devices with information that will control how and when program data may be replayed, retransmitted and/or recorded. These copy management commands may also be transmitted along with entitlement control messages (ECM), which are generally used by the conditional access unit to regulate access to a particular channel or service. Entitlement management messages (EMM) may be used to deliver privileges to the digital receiver **111** such as rights and descrambling keys. A decryption key is generally a code that is required to access scrambled data, and may be a function of the rights granted. Finally, content in the program data stream may include audio, video or multimedia data, all of which may be in a scrambled or clear format.

[0034] The digital device **110** includes a digital receiver **111**, which processes the incoming bitstream, extracts the program data therefrom, and provides the program data in a viewable format. The thus extracted program data is then provided to a decoding unit **112** for further processing, including separation of the system information from the content, as well as decoding, or decompressing, of the content to its original form. The digital receiver **111** also regulates access to the program data by other components on the entertainment system **100**, and according to one embodiment of the present invention, supports the simultaneous transmission of program data having content in a de-scrambled format (hereinafter referred to as "descrambled content") and program data having content in a scrambled format (hereinafter referred to as "scrambled content").

[0035] According to one embodiment, the digital device **110** can be a digital television set where the digital receiver **111** is a set-top box integrated therein, and the decoding unit **112** is an MPEG (Motion Picture Experts Group) decoder. The digital television set's display (not shown) is, according to this embodiment, integrated within the digital device **110**. Alternatively, it will be appreciated that the digital device **110** may include only the digital receiver **111** and/or the decoder unit **112**, with a display being external to the decoding device **110**. An example of this embodiment would be an integrated receiver/decoder (IRD) such as a stand-alone set-top box which outputs NTSC, PAL or other suitable signals.

[0036] In one embodiment where the digital device **110** is L-compliant, an initiator **113** ensures that a synchronization flag included in the license is preset before the license is used. The initiator **113** can set or reset the synchronization flag, as detailed in the figures below. In one embodiment, the initiator **113** sets the synchronize flag when content is delivered to the home environment through a conditional access system such as a CCI-compliant system and the initiator **113** resets the synchronization flag when content is delivered through the Internet and rights management is initially controlled by the license. In another embodiment, the initiator **113** uses the flag to prevent the content from being used by specific DRM systems. For example by resetting the flag when the content is delivered through a conditional access system, the initiator **113** signals an L-compliant system that it may not use the content. Although the initiator **113** is shown embedded in the digital device **110**, the initiator **113** can exist outside the digital device **110**. In another embodiment, the digital device **110** is CCI-compliant and L-compliant.

[0037] Digital device **110** may be connected to other components in the entertainment system **100** through a transmission medium **120**. The transmission medium **120** operates to transmit control information and data including program data between the digital device **110** and other components in the entertainment system **100**. It will be appreciated that other analog and/or digital components may be added or substituted for the components briefly described hereinafter.

[0038] The entertainment system **100** may include an audio system **130** coupled to the transmission medium **120**. The audio system **130** may include speakers and an audio player/recorder such as a compact disc player or other magneto-optical disc that may be used to play and/or record audio data. A removable digital recorder **140**, such as a

D-VHS VCR, a DVD recorder, a CD recorder, or an optical media recorder, may also be connected to the digital device **110** and other components of the entertainment system **100** through the transmission medium **120**. As known, the digital recorder **140** may be used to record analog or digital audio, video, and other data transmissions, and accordingly an embodiment of the system may be used to record program data received by the digital device **110** and transmitted to the digital recorder **140** over transmission medium **120**.

[**0039**] A hard disk recording unit **150** may also be coupled to digital device **110** and other components via transmission medium **120**. The hard disk recording unit **150** may be a personal computer system, a stand-alone hard disk recording unit, or other hard disk recording device capable of recording analog or digital audio, video and data transmissions. As with digital VCR **140**, according to one embodiment of the system, the hard disk recording unit **150** may be used to record program data received by the digital device **110** and transmitted to the hard disk recording unit **150** over transmission medium **120**.

[**0040**] Display **160** may include a high definition television display, a monitor or other device capable of processing digital video signals. In an embodiment where the digital device **110** is a stand-alone set-top box, display **160** may be a digital television set. Also, a control unit **170** may be coupled to the transmission medium **120**. The control unit **170** may be used to coordinate and control the operation of some or each of the components on the entertainment system **100**, as well and other electronic devices remotely coupled thereto.

[**0041**] Any of the devices **110-170** can conform to one or more DRM systems including CCI compliant devices and L-compliant devices. The oldest DRM system is known as CCI. Examples of CCI systems include a standard adopted by five companies—Hitachi, Intel, Matsushita (MEI), Sony and Toshiba—known as the "**5**C" Digital Transmission Content Protection (DTCP) specification. The DTCP specification defines a cryptographic protocol for protecting audio/video (AV) entertainment content from illegal copying, intercepting and tampering as it traverses high performance digital buses, such as the IEEE 1394 bus or the USB**2** bus standard. DTCP uses symmetric key cryptographic techniques to encode components of a compliant device. This allows for the authentication of any digital device prior to the transmission of the digital content in order to determine whether the device is compliant. The digital content is itself encoded prior to transmission so that unauthorized copying of the content will result in an unintelligible copy. Other examples of CCI-compliant systems include the POD Copy Protection System from Open Cable and the watermark Copy Protection System from the Video Watermarking Group (VWG).

[**0042**] In one exemplary CCI system, use rights are expressed as bit fields carried by the content stream. The bit fields are physically bound to the content. All operations on the CCI are performed on the stream itself. Thus, CCI operations are done at the transport layer. The CCI bits can also be referred to as Copy Generation Management System (CGMS) bits. The encoded CCI code is made up of 2 bits, of which "00,""10," and "11" indicate "unlimited allowance for copies,""allowance for a single generation copy," and "inhibition of copy," respectively. The "01" bit code is left unused. The manner in which the CCI bits are added to an AV stream is specified for the different kinds of standard (e.g., Motion Picture Expert Group MPEG, Digital Video DV and audio data). These CCI bits are added within the data portion of data stream that constitute the AV information that controls the use of the AV information and content by down stream devices. At each data recording time, a recording device inspects the CCI code added to the AV information of a data packet and refrains from recording them if the CCI code indicates the copy prohibition. If the CCI code indicates the allowance of a single copy, the CCI code is changed to copy prohibition mode and then the AV information is recorded in a recording media once. Thus, the copy generations allowed from the original data can be restricted.

[**0043**] In a new DRM system, license technology is used where usage constraints or allowed rights are specified in a license or a certificate and enforced by license-compliant devices. Such license or certificate may be sent separately from the content or may be sent together with the content.

[**0044**] In the license system, license rights are expressed in a readable language such as Extensible Mark-up Language (XML). The license may be physically bound to the content, or alternatively, may be physically separate and associated with the content through a link. In the embodiment where the license is not physically bound to the content, it can be moved from device to device independently of the content to reflect usage rights of a device to a particular content. License systems operate at the application layer, and examples of systems that support licenses include Microsoft's Window Media and RealNetworks' Real System.

[**0045**] In one embodiment, the license rights are expressed in Extensible Rights Markup Language (XrML). XrML is an XML-based specification grammar for expressing rights and conditions associated with digital content, resources, and services. XrML provides a universal method for specifying rights and issuing conditions (licenses) associated with the use and protection of content. XrML facilitates the creation of an open architecture for rights management of digital content and allows content owners to: (1) Describe rights, fees and conditions appropriate to commerce models they select. (2) Provide standard terms for usage rights with useful, concise and easily understandable meanings. (3) Offer vendors operational definitions of trusted systems for compliance testing and evaluation. (4) Provide extensibility to new language features without compromising. As part of a trusted environment, XrML can be used to apply rights to a wide variety of content and services to enable custom tailoring of digital offerings. For example, a content provider can provide various offerings, each with different rights (e.g., view, save, forward), conditions (e.g., free, fee based, limited time) and delivery methods (e.g., downloaded, streamed, ASP). New services with specific rights can be added to individuals or user groups through use of XrML.

[**0046**] With the new DRM system, the functionality of digital devices such as set-top boxes, digital televisions, digital audio players, and similar such digital devices extends beyond their historical role of conditional access (CA), i.e., merely de-scrambling content to a CA-clear format for real-time viewing and/or listening to further

include constraints and conditions on the recording and playback of such digital content. For example, viewers may be allowed to record program data with content in a scrambled format and have the content de-scrambled and displayed at a later time. Program viewing units such as set top boxes may be designed to regulate the de-scrambling of the recorded content in the program data such that a record of the de-scrambling may be made and reported to the service providers. This allows the service providers to monitor the usage of program data by viewers and to bill the viewers. Program viewing units may be configured with key management functions that support special revenue features such as pay per-view, pay-per play, pay-per-time, and other features.

[**0047**] In the embodiment of **FIG. 1**, although any of the devices **110-170** can conform to a plurality of DRM systems including CCI-compliant devices and L-compliant devices, compatibility and interoperability are achieved by providing a common interface for both types of devices: among these compatible devices, those who need to access (usually descramble) the content share common access protocol and access information (usually descrambling algorithm and descrambling key).

[**0048**] Each of the conditional access devices provides a pass-through capability to pass a license to other L-compliant devices. The license is expressed in a predetermined syntax such as a mark-up language and contains a synchronization flag that is used to provide compatibility and interoperability.

[**0049**] Whenever an L-compliant device receives content from a conditional access device, it obtains DRM data (e.g. CCI bits) from the conditional access device. The L-compliant device checks the synchronization flag in the appropriate license then updates its DRM data to reflect the conditional access device DRM data.

[**0050**] DRM data messages traverse the CCI-compliant devices and the L-compliant devices. The data messages conform to one or more of the following: common rights language syntax, common syntax for transferring cryptographic data or access data, common domain registration syntax and message, common syntax for authentication status messages, common syntax for revocation messages, a private data message syntax, and common syntax for communicating renewal information.

[**0051**] Each of devices **110-170** uses a baseline DRM framework of tools and a plurality of proprietary DRM plug-ins ("Proprietary DRMs"). The Proprietary DRMs connect via a standardized interface to the Baseline DRM tools. The DRM tools and Baseline DRM Manager are resident in every DRM compliant device. The Proprietary DRMs include either downloadable, tamper resistant software delivered via a secure channel or be robustly implemented in hardware.

[**0052**] **FIG. 2** shows an exemplary transport layer and application layer APIs. In this embodiment where CCI technology and license technology coexist, three types of interfaces **200-220** exist: a license module to license module interface **200**, a CCI module to CCI module interface **210**, and a license module to CCI module **220**. The interfaces **200-220** allows L-compliant modules **250-260** to communicate with each other and to communicate with CCI-compliant modules **270-280** The application programming interface allows applications to interact with the Baseline DRM system. The baseline DRM system recognizes an external, proprietary Content Protection and Copy Management system through a bi-directional API with transaction support and an indicator that the baseline DRM system accepts or trusts this external authority.

[**0053**] The interfaces for the modules **200-220** perform the following operations: establish trust between modules, secure transfer of DRM information between modules, secure the transfer of content access information (e.g., keys) between modules, secure the enforcement of rules as applied to the content, recognize the home domain, and support revocation/renewability for the modules.

[**0054**] The devices of **FIG. 1** can establish trust through either an L-system or a CCI-system. Moreover, a device with both L-system and CCI-system can detect the result of the operation. To do this, the interface of **FIG. 2** allows both systems to be synchronized. The trust exchange mechanism is done through either the CCI-compliant system or the L-compliant system. The L-compliant system provides the CCI-compliant capability to ensure interoperability.

[**0055**] To provide interoperability, synchronization needs to be achieved between DRM information in CCI-compliant systems and L-compliant systems. In one embodiment, the L-compliant system records a hand-off of the DRM function to one of the CCI-compliant system.

[**0056**] The interfaces are implemented in one embodiment by creating in the L-system a plug-in that is compatible with the CCI-system. In one embodiment where the CCI system is the CI interface in a set-top, the L-system plug-in behaves like a resource to the CI interface.

[**0057**] In one implementation, the API enables bi-directional transfer of a DRM data message, an access data message, a domain registration message, an authentication status message, a revocation data message, and a private data message.

[**0058**] For the DRM data message, communication of DRM information between L-system and CCI-system is done through a translation by the L-system between the CCI-language and the license language. The message includes an identification of the content. For the access data message, access information is communicated between the L-system and the CCI-system. The message includes the content identification. For the domain registration message, the interface communicates a domain identity and an indicator showing either a registration or a cancellation request. The authentication status message communicates either a trust establishment or a trust failure between the L-system and the CCI-system. The L-system provides device identification translation, if necessary. The revocation data message communicates information relating to an identification of devices and modules to be revoked. The L-system provides translation services, if necessary. The optional private data message is used to communicate renewability information between the L-system and the CCI-system. This is accomplished by transferring private data through the interface.

[**0059**] **FIG. 3** shows an exemplary process **300** to synchronize CCI-compliant devices with L-compliant devices. In this process, each L-compliant device obtains DRM data

if the CCI-compliant device and the L-compliant device are not synchronized, and the L-compliant device updates its DRM data to match CCI-compliant device DRM data.

[0060] In the embodiment of **FIG. 3**, the synchronization is established by including in the L-compliant system license a synchronization flag to be set any time copy protection has been handed-off to a CCI-compliant system or on the first delivery to a device. The L-compliant system then checks if the synchronization flag has been set, and if so, the L-system either acquires the CCI-system DRM information or ensure that no CCI system DRM information exists **(302)**. Next, the L-system DRM information included in the license is compared to the retrieved CCI system DRM information and adjusted to match the DRM information in accordance with predetermined criteria **(304)**. If matching cannot be done in accordance with the criteria, exception procedures (including revocation) are followed **(306)**. Alternatively, if matching can be done, the synchronization flag is reset **(308)**.

[0061] **FIG. 4** shows one embodiment of an L-compliant device operational process. First, the process receives a command from a user such as copy, play, or edit content, among others **(402)**. Next, the L-compliant device checks a license that it received for the content to be manipulated **(404)** and determines whether the license authorizes the command **(406)**. If not, the process throws an exception that can include revoking the license and disabling any future operations on the content **(408)**. Alternatively, if the license is acceptable, the L-compliant device accesses content, performs the requested operation, and modifies the license afterward as appropriate **(410)**.

[0062] **FIG. 5** shows a corresponding embodiment of a CCI-compliant device operational process. First, the process receives a command from a user such as copy, play, or edit content, among others **(502)**. Next, the CCI-compliant device accesses the contents checks a CCI register or bits embedded in the content to be manipulated **(504)** and determines whether the CCI bits authorize the command **(506)**. If not, the process throws an exception that can include revoking the CCI bits and disabling any future operations on the content **(508)**. Alternatively, if the license is acceptable, the CCI-compliant device accesses content, performs the requested operation, and modifies the bits afterward as appropriate **(510)**.

[0063] **FIG. 6** shows an exemplary process illustrating an L-compliant device hand-off operation. First, the process receives a command from a user such as copy, play, or edit content, among others **(602)**. Next, the L-compliant device checks a license that it received for the content to be manipulated **(604)** and determines whether the license authorizes the command **(606)**. If not, the process throws an exception that can include revoking the license and disabling any future operations on the content **(608)**. Alternatively, if the license is acceptable, the L-compliant device sets a synchronization flag **(610)**. Next, the process passes the user command to the CCI-compliant device **(612)**. Next, the CCI-compliant device accesses the contents, checks DRM data by checking a CCI register or bits embedded in the content to be manipulated **(614)**, and determines whether the CCI bits authorize the command **(616)**. If not, the process throws an exception that can include revoking the CCI bits and disabling any future operations on the content **(618)**. Alternatively, if the DRM access rights data embedded in the CCI bits is acceptable, the CCI-compliant device accesses content, performs the requested operation, and modifies the bits afterward as appropriate **(620)**.

[0064] **FIG. 7** shows an exemplary process illustrating an L-compliant device regaining control of content from a CCI-compliant device. First the process receives a command from the user such as copy, play, or edit content, among others **(702)**, Next, the L-compliant device checks the synchronization flag included the license that it received for the content to be manipulated and detects that the flag has been set **(704)**. Next the L-compliant device retrieves the CCI information through its CCI plug-in, updates the license appropriately, resets the synchronization flag **(706)** and determines if the updated license authorizes the command **(708)**. If not, the process throws an exception that can include revoking the license and disabling any future operations on the content **(710)**. Alternatively, if the license is acceptable, the L-compliant device accesses content, performs the requested operation, and modifies the license afterward as appropriate **(712)**.

[0065] Next, an exemplary application of a synchronization procedure is discussed. In the exemplary Case 1 and Case 2, content is transferred from an L-compliant device to a CCI-compliant device and a copy is made at the CCI-compliant device. The original content and the copy (first and second instances of the content) are circulated and eventually received by the L-compliant device.

[0066] Case 1—Legal Copy—In this case, the following steps occur:

[0067] 1) The synchronization flag is set in the license and the content is transferred to the CCI-compliant device.

[0068] 2) When the first instance of the content is received by (reappears on) the L-compliant device, since, the synchronization flag is set in the license, the device checks the CCI data and determines that a copy has been made.

[0069] 3) The L-compliant device updates the license assigning it to the first instance of the content.

[0070] 4) When the second instance of the content reappears on the L-compliant device, since the synchronization flag is set in the license, the device checks the CCI data and noticing the matching license and CCI DRM data, the L-compliant device resets the synchronization flag in the license.

[0071] Case 2—Illegal copy—The following steps occur:

[0072] 1) The synchronization flag is set in the license and the content is transferred to the CCI-compliant device.

[0073] 2) When the first instance of the content reappears on the L-compliant device, since the synchronization flag is set in the license, the device checks the CCI data and noticing the matching license and CCI DRM data, the L-compliant device resets the synchronization flag in the license.

[0074] 3) When the second instance of the content reappears on the L-compliant device, since the synchronization flag is reset, the L-compliant device determines that it is dealing with an illegal copy and starts exception procedures.

[0075] The next two examples illustrate more complex scenarios. In these examples, content initially resides on a compatible device capable of supporting both CCI and L-compliant devices. The content is first transferred (moved) to a CCI-compliant only device and is then subsequently copied to another CCI-compliant only device. The original and the copy of the content are then transferred onto devices supporting both CCI and L-compliant devices.

[0076] Case 3—A single license controlling multiple copies

[0077] In this case, the following steps occur in the L-system:

[0078] 1) The synchronization flag is set in the license and the CCI system is allowed to perform the requested operation (such as copy the content).

[0079] 2) In the first device supporting both CCI and L-devices where either the original or the copy reappears, the CCI DRM data (showing copy-no-more) is passed to the L-compliant device with a content identification (ID).

[0080] 3) Using the content ID, the license is retrieved, and since the synchronization flag is set, the license is updated to indicate copy-no-more and the synchronization flag is reset.

[0081] 4) In the second device supporting both CCI and L-compliant devices where either the copy or the original reappears, the CCI DRM data (showing copy-no-more) is passed to the L-compliant device with the content ID.

[0082] 5) Using the content ID, the license is retrieved and now shows a synchronization flag that has been reset, indicating that the CCI DRM data and the license are synchronized.

[0083] Case 4—Each copy needs a license

[0084] The following steps involving the L-system occur:

[0085] 1) The synchronization flag is set in the license and control is handed to the CCI-compliant device so that the CCI-compliant device can perform the requested operation.

[0086] 2) In the first device supporting both CCI and L-compliant device where either the original or the copy reappears, the CCI DRM data (showing copy-no-more) is passed to the L-system with a package ID. The package ID differs from the content ID of Case 3 since two packages can contain the same content.

[0087] 3) Using the package ID, the license is retrieved, and since the synchronization flag is set, the CCI DRM data is used to update the license, while the copy event is recorded.

[0088] 4) Since a copy was made, a duplicate license is created in which the package ID is changed and the synchronization flag is reset. The package ID is also changed in the content.

[0089] 5) In the second device supporting both CCI and L system where either the copy or the original reappears, the CCI (showing copy-no-more) is passed to the L system with the package ID.

[0090] 6) Using the package ID, the license is retrieved and, since both CCI bits and the license agrees, the synchronization flag is reset.

[0091] It is to be understood that various terms employed in the description herein are interchangeable. Accordingly, the above description of the invention is illustrative and not limiting. Further modifications will be apparent to one of ordinary skill in the art in light of this disclosure. Thus, although primarily intended to be used in audio-visual environment, this invention is also applicable in any environment that restrict the use of digital packages and two different classes of systems are present: one using restrictions or usage rights tightly coupled to the digital package itself (conditional access compliant such as CCI-compliant) and another where usage rights are held separately from the digital package in a license (L-compliant). Examples of such environment include but are not limited to software and games delivery systems, digital books and collaborative creation of documents. Even more generally, the system applies to environments where multiple rights management systems that use different methods of associating rights and content cohabitate.

[0092] The invention has been described in terms of specific examples which are illustrative only and are not to be construed as limiting. The invention may be implemented in digital electronic circuitry or in computer hardware, firmware, software, or in combinations of them. Apparatus of the invention may be implemented in a computer program product tangibly embodied in a machine-readable storage device for execution by a computer processor; and method steps of the invention may be performed by a computer processor executing a program to perform functions of the invention by operating on input data and generating output. Suitable processors include, by way of example, both general and special purpose microprocessors. Storage devices suitable for tangibly embodying computer program instructions include all forms of non-volatile memory including, but not limited to: semiconductor memory devices such as EPROM, EEPROM, and flash devices; magnetic disks (fixed, floppy, and removable); other magnetic media such as tape; optical media such as CD-ROM disks; and magneto-optic devices. Any of the foregoing may be supplemented by, or incorporated in, specially-designed application-specific integrated circuits (ASICs) or suitably programmed field programmable gate arrays (FPGAs).

[0093] While the preferred forms of the invention have been shown in the drawings and described herein, the invention should not be construed as limited to the specific forms shown and described since variations of the preferred forms will be apparent to those skilled in the art. Thus the scope of the invention is defined by the following claims and their equivalents.

What is claimed is:

1. A digital rights management (DRM) system, comprising:

one or more license (L) compliant devices adapted to interoperate with each other, the devices sharing content through a common access protocol and access information, and

an initiator coupled to the one or more L-compliant devices to initialize one or more of the L-compliant devices.

2. The system of claim 1, further comprising a conditional access device coupled to the one or more L-compliant devices.

3. The system of claim 2, wherein the conditional access device comprises a copy control information (CCI) compliant device.

4. The system of claim 2, wherein the conditional access device provides a pass-through capability to pass a license to the one or more L-compliant devices.

5. The system of claim 1, wherein one of the L-compliant devices comprises an L-synchronization flag.

6. The system of claim 1, wherein one of the L-compliant devices receives a license expressed in a predetermined syntax.

7. The system of claim 1, wherein one of the L-compliant devices receives a license expressed in a mark-up language.

8. The system of claim 1, wherein each L-compliant device obtains DRM data if one of the L-compliant devices is not synchronized.

9. The system of claim 8, wherein the L-compliant device updates its DRM data according to a conditional access device DRM data.

10. A digital rights management (DRM) system, comprising:

one or more conditional access devices adapted to pass through messages for one or more L-compliant devices, the devices sharing content through a common access protocol and access information; and

an initiator coupled to the one or more L-compliant devices to initialize one or more of the L-compliant devices.

11. The system of claim 10, wherein the conditional access device comprises a copy control information (CCI) compliant device.

12. The system of claim 10, wherein the L-compliant devices receive a license expressed in a predetermined syntax.

13. A digital rights management (DRM) system, comprising:

one or more copy control information (CCI) compliant devices;

one or more license (L) compliant devices adapted to interoperate with the one or more CCI compliant devices, each L-compliant device and CCI-compliant device sharing content through a common access protocol and access information, and

an initiator coupled to the one or more L-compliant devices to initialize one or more of the L-compliant devices.

14. The system of claim 13, wherein the one or more CCI-compliant devices provide a pass-through capability.

15. The system of claim 13, wherein the one or more CCI-compliant devices pass a license to the one or more L-compliant devices.

16. The system of claim 13, further comprising DRM data messages transmitted to the one or more CCI-compliant devices and the one or more L-compliant devices.

17. The system of claim 16, wherein the data messages conform to one or more of the following: a common rights language syntax, a common syntax for transferring cryptographic data or access data, a common syntax for authentication status messages, a common syntax for revocation messages, a private data message syntax, and a syntax for communicating renewal information.

18. The system of claim 16, wherein content is shared through a common encryption method.

19. The system of claim 13, wherein one or more of the L-compliant devices obtain DRM data if one or more of the CCI-compliant devices and one or more of the L-compliant devices are not synchronized.

20. The system of claim 19, wherein the L-compliant device updates its DRM data to reflect CCI-compliant device DRM data.

21. A method for synchronizing one or more license (L)-compliant devices with one or more conditional access devices in a digital rights management (DRM) system, comprising:

sharing content through a common access protocol and access information;

determining whether one or more of the L-compliant devices and one or more of the conditional access devices are synchronized; and

if one of the devices is not synchronized, updating L-compliant device DRM data to match the conditional access device DRM data.

22. The method of claim 21, wherein the conditional access devices comprise CCI-compliant devices.

23. The method of claim 21, wherein one of the L-compliant devices receives a license indicative of access rights associated with a selected content.

24. The method of claim 23, further comprising:

resetting a synchronization flag in the license;

determining whether the license authorizes the command; and

throwing an exception if the command is unauthorized and otherwise setting a synchronization flag.

25. A method for synchronizing one or more conditional access-compliant devices with one or more L-compliant devices in a digital rights management (DRM) system, comprising:

determining whether the conditional access-compliant devices and L-compliant devices are synchronized; and

if not, updating the conditional access-compliant device DRM data to match the L-compliant device DRM data.

26. The method of claim 25, further comprising passing a synchronization flag to one or more of the L-compliant devices.

27. The method of claim 26, further comprising passing through a license to one or more of the L-compliant devices.

28. The method of claim 25, further comprising:

receiving a user command for a selected content;

checking a DRM data embedded in the selected content and determining whether the DRM data authorizes the user command;

if not authorized, throwing an exception and if authorized, performing the user command, and

updating the DRM data to reflect performance of the user command.

29. The method of claim 28, wherein throwing an exception further comprises revoking access rights to the selected content.

30. A method for synchronizing one or more conditional access-compliant devices with one or more license (L)-compliant devices in a digital rights management (DRM) system, comprising:

receiving a command from a user for a selected content;

checking a license received for the selected content;

determining whether the license authorizes the command; and

throwing an exception if the command is unauthorized and otherwise setting a synchronization flag.

31. The method of claim 30, wherein throwing an exception further comprises revoking the license.

32. The method of claim 30, wherein throwing an exception further comprises disabling future operations on the content.

33. The method of claim 30, further comprising passing the command to the conditional access compliant device.

34. The method of claim 33, wherein the conditional access compliant device is a copy control information (CCI) compliant device.

35. The method of claim 34, further comprising checking CCI data embedded in a content stream and determining whether the CCI data authorizes the command.

36. The method of claim 35, wherein if the command is authorized, the CCI-compliant device accesses the content, performs the requested operation, and modifies the CCI data.

37. A method for synchronizing one or more license (L)-compliant devices in a digital rights management (DRM) system, comprising:

sharing content through a common access protocol and access information;

determining whether one or more of the L-compliant devices are synchronized; and

if one of the devices is not synchronized, updating L-compliant device DRM data to match the other L-compliant device DRM data.

* * * * *