US009391467B2

(12) **United States Patent**
Zhao et al.

(10) **Patent No.: US 9,391,467 B2**
(45) **Date of Patent: Jul. 12, 2016**

(54) **STEP-UP BATTERY CHARGING MANAGEMENT SYSTEM AND CONTROL METHOD THEREOF**

(71) Applicant: **Silergy Semiconductor Technology (Hangzhou) LTD**, Hangzhou, ZheJiang Province (CN)

(72) Inventors: **Chen Zhao**, Hangzhou (CN); **Shuai Cheng**, Hangzhou (CN); **Jie Yao**, Hangzhou (CN)

(73) Assignee: **Silergy Semiconductor Technology (Hangzhou) LTD**, Hangzhou (CN)

(*) Notice: Subject to any disclaimer, the term of this patent is extended or adjusted under 35 U.S.C. 154(b) by 275 days.

(21) Appl. No.: **14/158,296**

(22) Filed: **Jan. 17, 2014**

(65) **Prior Publication Data**

US 2014/0203763 A1 Jul. 24, 2014

(30) **Foreign Application Priority Data**

Jan. 22, 2013 (CN) 2013 1 0024894

(51) **Int. Cl.**
H02J 7/00 (2006.01)

(52) **U.S. Cl.**
CPC ***H02J 7/0081*** (2013.01); ***H02J 7/0083*** (2013.01); ***H02J 7/0093*** (2013.01); *H02J 2007/0059* (2013.01)

(58) **Field of Classification Search**
CPC H02J 7/0029
USPC 320/107
See application file for complete search history.

(56) **References Cited**

U.S. PATENT DOCUMENTS

7,180,268	B2	2/2007	Denning et al.	
8,503,208	B2	8/2013	Krause	
8,575,778	B2	11/2013	Chen	
2006/0267552	A1*	11/2006	Baer et al.	H02J 7/0054 320/128
2013/0147424	A1	6/2013	Takano et al.	

FOREIGN PATENT DOCUMENTS

CN	1896762	A	1/2007
CN	201226449	Y	4/2009
CN	101969212	A	2/2011
CN	201994705	U	9/2011
CN	201210516649.X		3/2013

* cited by examiner

Primary Examiner — Thuan Do
(74) *Attorney, Agent, or Firm* — Michael C. Stephens, Jr.

(57) **ABSTRACT**

In one embodiment, a battery charger can include: (i) a step-up converter configured to generate an output signal by boosting a DC input voltage, where a threshold voltage is greater than the DC input voltage; (ii) a charging control circuit configured to receive the output signal from the step-up converter, and to control charging of a battery; (iii) the charging control circuit being configured to regulate the output signal to maintain a charging current for the battery charging as a trickle current when a battery voltage is less than the threshold voltage; and (iv) the charging control circuit being configured to charge the battery directly by the output signal when the battery voltage is greater than the threshold voltage.

20 Claims, 8 Drawing Sheets

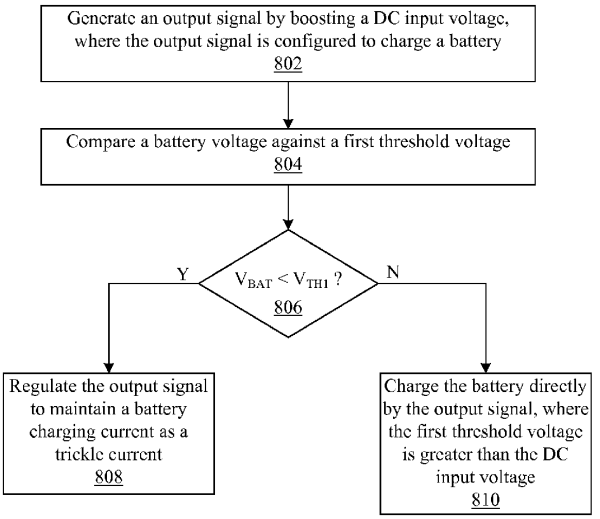

ADC EX1006
IPR2025-00885

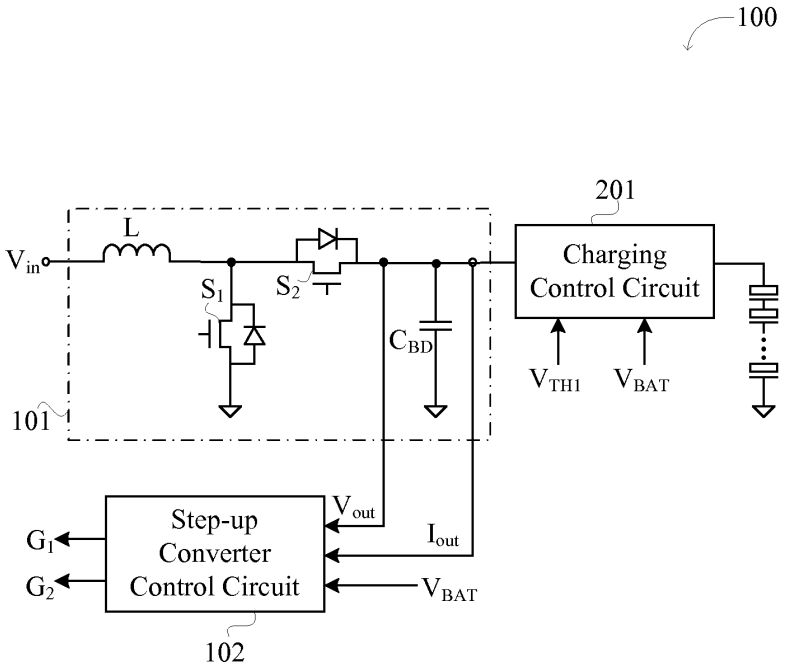
100
201
L
V_{in}
S_1
S_2
C_{BD}
Charging
Control Circuit
V_{TH1}
V_{BAT}
101
V_{out}
I_{out}
G_1
G_2
Step-up
Converter
Control Circuit
V_{BAT}
102

FIG. 1

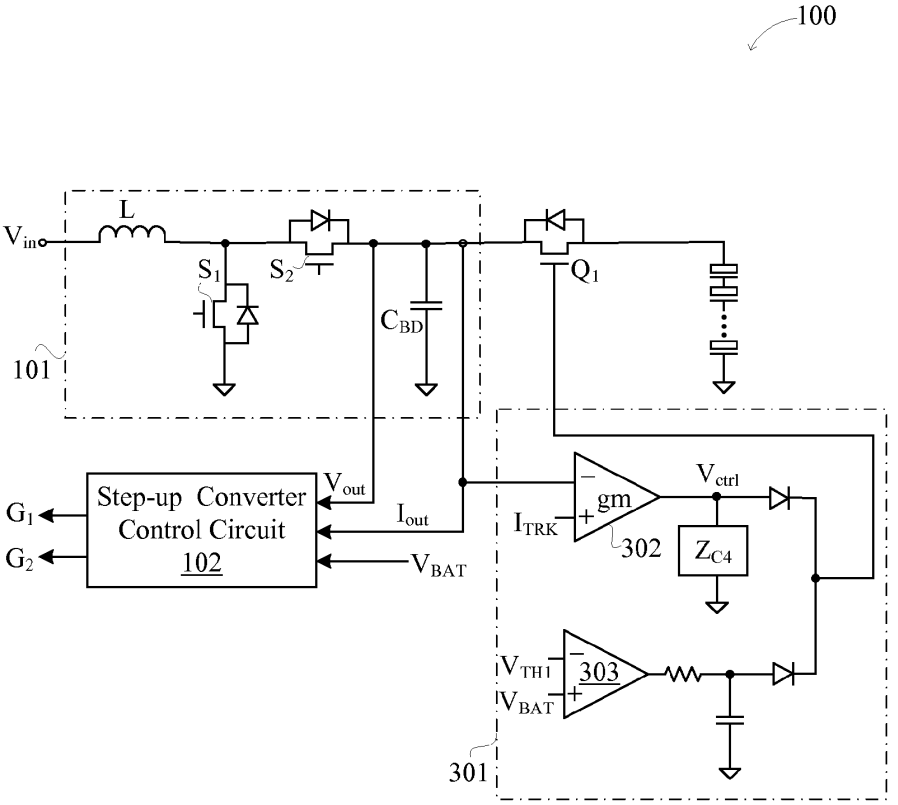
100
L
V_{in}
S_1
S_2
C_{BD}
Q_1
101
Step-up Converter
Control Circuit
102
V_{out}
I_{out}
V_{BAT}
G_1
G_2
gm
I_{TRK}
302
V_{ctrl}
Z_{C4}
V_{TH1}
V_{BAT}
303
301

FIG. 2

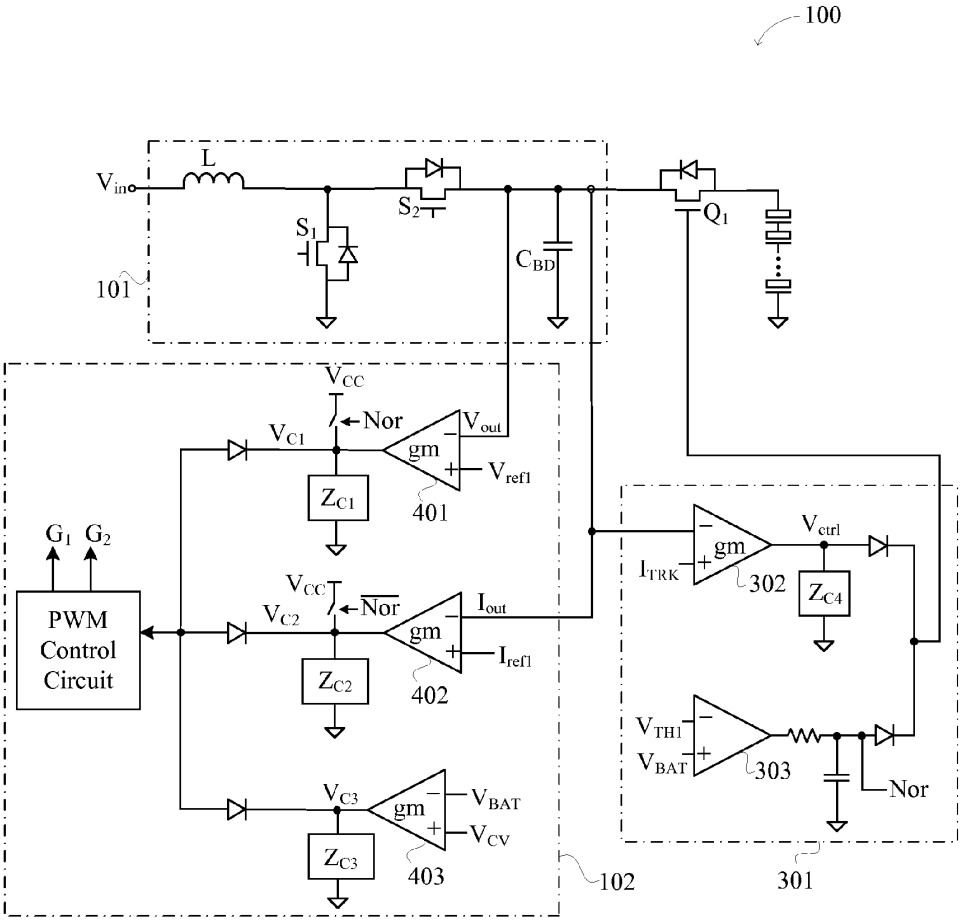
100
L
V_{in}
S_1
S_2
C_{BD}
Q_1
101
V_{CC}
Nor
V_{C1}
V_{out}
gm
V_{ref1}
Z_{C1}
401
G_1 G_2
PWM Control Circuit
V_{CC}
$\overline{Nor}$
V_{C2}
I_{out}
gm
I_{ref1}
Z_{C2}
402
V_{C3}
gm
V_{BAT}
V_{CV}
Z_{C3}
403
102
gm
V_{ctrl}
I_{TRK}
302
Z_{C4}
V_{TH1}
V_{BAT}
303
Nor
301

FIG. 3

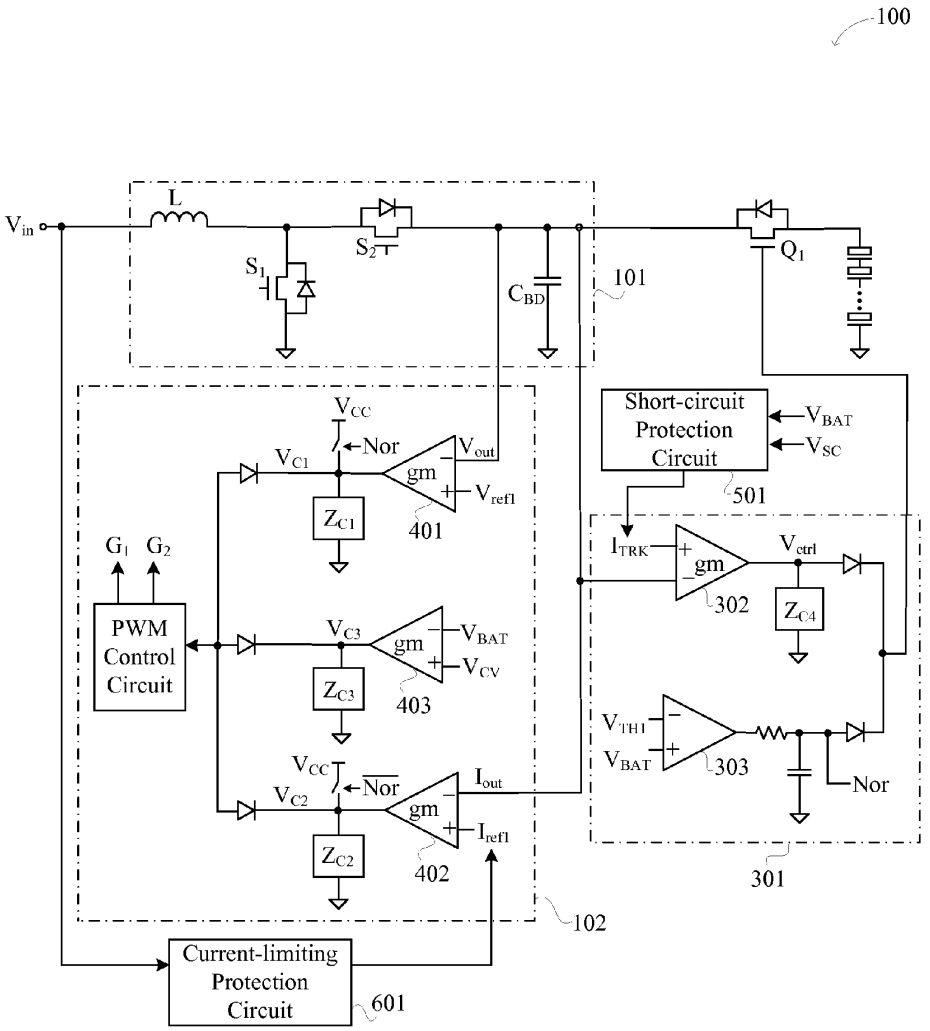
100
L
V_{in}
S_1
S_2
C_{BD}
101
Q_1
V_{CC}
Nor
V_{C1}
V_{out}
gm
V_{ref1}
Z_{C1}
401
G_1 G_2
PWM Control Circuit
V_{C3}
V_{BAT}
V_{CV}
Z_{C3}
403
V_{CC}
$\overline{Nor}$
V_{C2}
I_{out}
I_{ref1}
Z_{C2}
402
102
Current-limiting Protection Circuit
601
Short-circuit Protection Circuit
V_{BAT}
V_{SC}
501
I_{TRK}
V_{ctrl}
302
Z_{C4}
V_{TH1}
V_{BAT}
303
Nor
301

FIG. 4

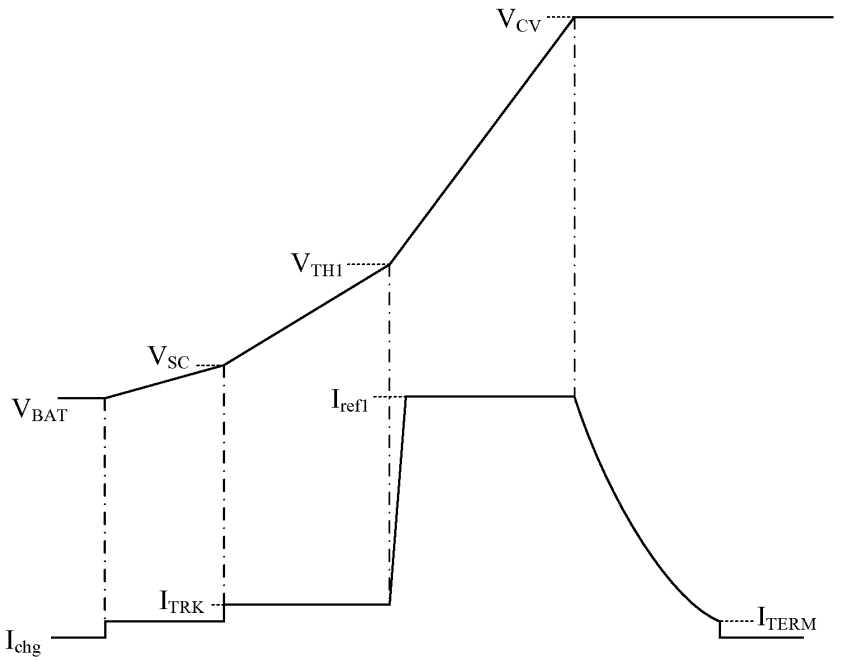

FIG. 5

ADC EX1006
IPR2025-00885

FIG. 6

ADC EX1006
IPR2025-00885

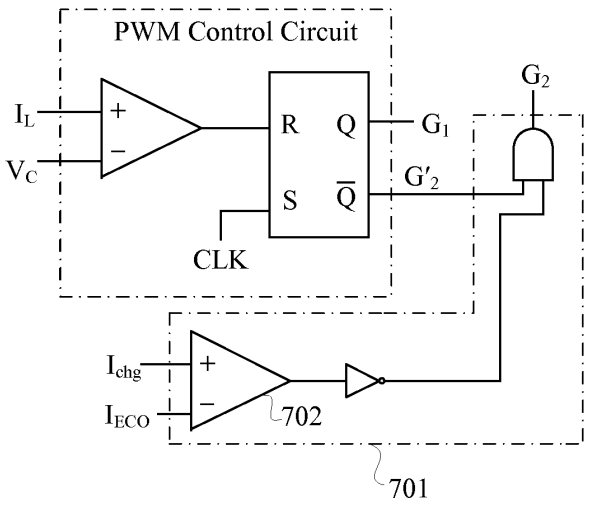

FIG. 7

ADC EX1006
IPR2025-00885

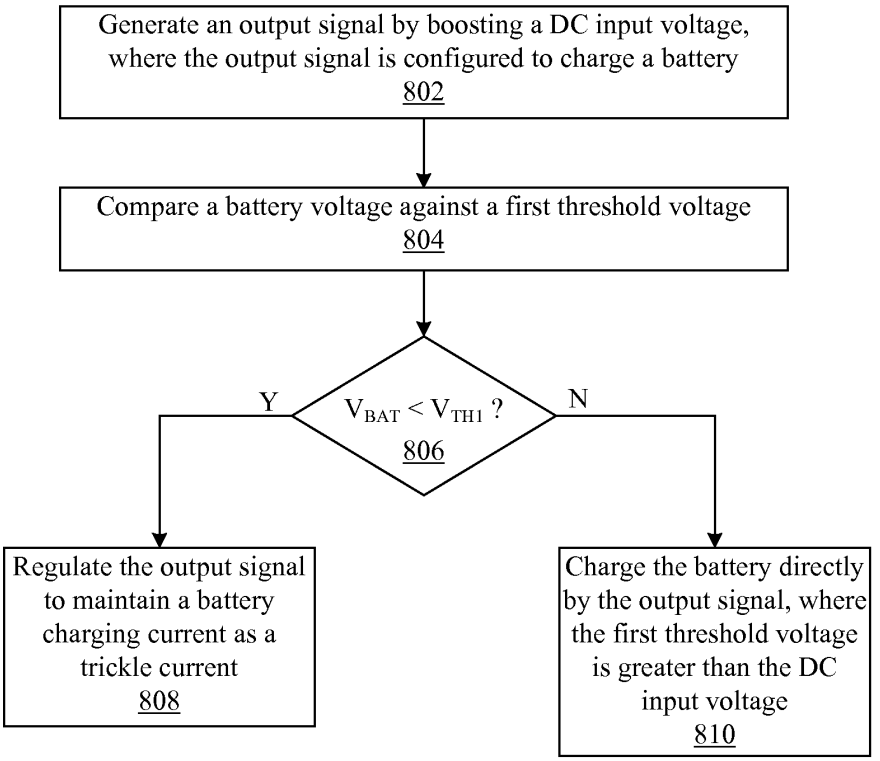

FIG. 8

ADC EX1006
IPR2025-00885

STEP-UP BATTERY CHARGING MANAGEMENT SYSTEM AND CONTROL METHOD THEREOF

RELATED APPLICATIONS

This application claims the benefit of Chinese Patent Application No. 201310024894.3, filed on Jan. 22, 2013, which is incorporated herein by reference in its entirety.

FIELD OF THE INVENTION

The present invention relates to the field of power supplies, and more particularly to a step-up battery charging management system and associated control method.

BACKGROUND

Battery charging systems typically utilize a step-down topology, with an input supplied by a power supply adapter, and an output coupled to a single-cell battery, or multi-cell batteries. A universal serial bus (USB) power supply system usually has a rating power supply voltage of 5V. A single-cell lithium battery can employ such step-down topology to charge the single-cell battery. Step-up topology can be used in battery management systems with series connected multi-cell lithium batteries. However, in some circumstances, such as high input current or short-circuit at the output, if relatively large current is used directly for charging, the electronic device and/or its battery can be damaged.

SUMMARY

In one embodiment, a battery charger can include: (i) a step-up converter configured to generate an output signal by boosting a DC input voltage, where a threshold voltage is greater than the DC input voltage; (ii) a charging control circuit configured to receive the output signal from the step-up converter, and to control charging of a battery; (iii) the charging control circuit being configured to regulate the output signal to maintain a charging current for the battery charging as a trickle current when a battery voltage is less than the threshold voltage; and (iv) the charging control circuit being configured to charge the battery directly by the output signal when the battery voltage is greater than the threshold voltage.

In one embodiment, a method of controlling charging of a battery can include: (i) boosting, by a step-up converter, a DC input voltage to generate an output signal configured to charge a battery; (ii) comparing a battery voltage against a threshold voltage, where the threshold voltage is greater than the DC input voltage; (iii) regulating the output signal to maintain a battery charging current to be a trickle current when the battery voltage is less than the threshold voltage; and (iv) charging the battery directly by the output signal when the battery voltage is greater than the threshold voltage.

BRIEF DESCRIPTION OF THE DRAWINGS

FIG. **1** is a schematic block diagram of a first example step-up battery charger in accordance with embodiments of the present invention.

FIG. **2** is a schematic block diagram of a second example step-up battery charger in accordance with embodiments of the present invention.

FIG. **3** is a schematic block diagram of a third example step-up battery charger in accordance with embodiments of the present invention.

FIG. **4** is a schematic block diagram of a fourth example step-up battery charger in accordance with embodiments of the present invention.

FIG. **5** is a waveform diagram of the example step-up battery charger as shown in FIG. **4**, in accordance with embodiments of the present invention.

FIG. **6** is an expected waveform diagram of a battery charging current when the battery connection is abnormal.

FIG. **7** is a schematic block diagram of a PWM control circuit and an energy-saving control circuit, in accordance with embodiments of the present invention.

FIG. **8** is a flow diagram of an example method of controlling a step-up battery charger, in accordance with embodiments of the present invention.

DETAILED DESCRIPTION

Reference may now be made in detail to particular embodiments of the invention, examples of which are illustrated in the accompanying drawings. While the invention may be described in conjunction with the preferred embodiments, it may be understood that they are not intended to limit the invention to these embodiments. On the contrary, the invention is intended to cover alternatives, modifications and equivalents that may be included within the spirit and scope of the invention as defined by the appended claims. Furthermore, in the following detailed description of the present invention, numerous specific details are set forth in order to provide a thorough understanding of the present invention. However, it may be readily apparent to one skilled in the art that the present invention may be practiced without these specific details. In other instances, well-known methods, procedures, processes, components, structures, and circuits have not been described in detail so as not to unnecessarily obscure aspects of the present invention.

In particular embodiments, power stage circuits in a step-up converter for a battery charger or charging management system can utilize a variety of topologies (e.g., Boost, Buck-Boost, Sepic, Cuk, Zeta, etc.). For example, topologies of Boost and Buck-Boost may be simpler, have lower product costs, and have advantages related to the device voltage withstand or breakdown voltage capability and efficiency. However, because there can be a negative voltage at the output of a single-transistor structure Buck-Boost topology, this approach may not be suitable for some battery charger applications. Also, a four-transistor structure Buck-Boost topology may also have disadvantages related to product cost and efficiency in some cases. Therefore, particular embodiments may utilize a Boost converter topology in the battery charger, and a Boost converter is shown in the examples that follow.

In one embodiment, a battery charger can include: (i) a step-up converter configured to generate an output signal by boosting a DC input voltage, where a threshold voltage is greater than the DC input voltage; (ii) a charging control circuit configured to receive the output signal from the step-up converter, and to control charging of a battery; (iii) the charging control circuit being configured to regulate the output signal to maintain a charging current for the battery charging as a trickle current when a battery voltage is less than the threshold voltage; and (iv) the charging control circuit being configured to charge the battery directly by the output signal when the battery voltage is greater than the threshold voltage.

Referring now to FIG. **1**, shown is a schematic block diagram of a first example step-up battery charger or charging management system **100**, in accordance with embodiments of the present invention. This example battery charger can include a step-up converter and charging control circuit **201**.

The step-up converter can receive DC input voltage V_{in} and may generate an output signal by boosting DC input voltage V_{in}. The output signal from the step-up converter can be received by charging control circuit **201**, and may be further regulated or controlled for purposes of charging the battery or battery device. The output of charging control circuit **201** can charge a plurality of series connected (e.g., lithium) batteries, as shown. For example, DC input voltage V_{in} can be provided to the step-up converter by a universal serial bus (USB) charger, or any other suitable low voltage power supply system.

For example, power stage circuit **101** of the step-up converter can be a synchronous rectifier Boost topology including inductor L, main switch S_1, synchronous switch S_2, and output capacitor C_{BD}. In a low current application, synchronous switch S_2 can be replaced by a diode to lower product costs. Step-up converter control circuit **102** can output control signals G_1 and G_2 for main switch S_1 and synchronous switch S_2, respectively. Control signals G_1 and G_2 can be generated by step-up converter control circuit **102** according to output voltage V_{out}, output current I_{out}, and battery voltage V_{BAT}. In this way, a substantially constant voltage or current control of the output signal of power stage circuit **101** can be realized during different battery charging stages.

Charging control circuit **201** can connect to an output of power stage circuit **101**, and may compare battery voltage V_{BAT} against threshold voltage V_{TH1}. The output signal of power stage circuit **101** can be regulated or controlled as to its use for battery charging, according to the comparison result. For example, threshold voltage V_{TH1} can be greater than DC input voltage V_{in}. When battery voltage V_{BAT} is less than threshold voltage V_{TH1}, charging control circuit **201** can regulate, limit, or otherwise restrict the output signal from power stage circuit **101** to charge the battery or battery device with a relatively low "trickle" current. For example, a trickle current can be about 1/10 of a constant charging current. When battery voltage V_{BAT} is greater than threshold voltage V_{TH1}, the output signal of power stage circuit **101** can be controlled to directly charge the battery device.

Referring now to FIG. **2**, shown is a schematic block diagram of a second example step-up battery charger or battery charge management system, in accordance with embodiments of the present invention. In this particular example, charging control circuit **201** can include power transistor Q_1 and power transistor control circuit **301**. During operation of charging control circuit **201**, power transistor Q_1 can function in a linear region or a fully conductive state (e.g., a saturation region). Power transistor or switch Q_1 can be any appropriate power transistor (e.g., BJT, MOS, etc.). In this particular example, transistor Q_1 can be an NMOS transistor with its source and drain connected between the output of power stage circuit **101** and the battery device. However, other circuit arrangements, transistors, and/or structures for charging control circuit **201** can also be supported in particular embodiments.

In this example, the non-inverting input terminal of transconductance amplifier **302** in power transistor control circuit **301** can receive signal I_{TRK} that represents an expected value of the trickle current. The inverting input terminal of transconductance amplifier **302** can receive output current I_{out} (e.g., obtained via a current sensor at the output) of power stage circuit **101**. The output current of transconductance amplifier **302** can charge/discharge compensation loop Z_{C4} to provide control signal V_{ctrl}. Also, the non-inverting input of comparator **303** can receive battery voltage V_{BAT}, and the inverting input of comparator **303** can receive threshold voltage V_{TH1}. The output of comparator **303** can be converted to a high-low level (e.g., digital, or relatively high amplitude variation) signal through an RC filter circuit.

Control signal V_{ctrl} and the high-low level signal output by comparator **303** can be provided through a diode to the gate of power transistor Q_1. For example, the value of the low level signal at the gate of power transistor Q_1 can be less than control signal V_{ctrl}, and the value of the high level signal can be greater than control signal V_{ctrl}. Thus, the higher of the two signals can be used to control the operation state of power transistor Q_1. Also, when lithium batteries are connected in series, and no input signal is received by power stage circuit **101**, capacitor C_{BD} can be charged by the battery device through the body diode of power transistor Q_1. Thus in this case, output voltage V_{out} can be relatively close to battery voltage V_{BAT}.

When an input signal is provided to power stage circuit **101**, and if DC input voltage V_{in} is greater than battery voltage V_{BAT}, capacitor C_{BD} can be charged through the body diode of synchronous switch S_2 until reaching the level of DC input voltage V_{in}. Battery voltage V_{BAT} may be less than output voltage V_{out} (e.g., battery voltage V_{BAT} is less than threshold voltage V_{TH1}), and comparator **303** can output a low level signal. Thus, control signal V_{ctrl} can be used to regulate the gate voltage of power transistor Q_1 such that power transistor Q_1 operates in the linear region, and the battery device can be charged with a trickle current in a closed loop. Step-up converter control circuit **102** can also control output voltage V_{out} to be slightly greater than a predetermined operating voltage of V_{in} in the closed loop. For example, the predetermined operating voltage can be slightly greater than threshold voltage V_{TH1} (e.g., if DC input voltage is about 5V, V_{TH1} can be about 5.4V or about 5.3V, and the predetermined operating voltage can be about 5.8V).

When battery voltage V_{BAT} is greater than threshold voltage V_{TH1}, comparator **303** can output a high level signal to fully turn on power transistor Q_1. In this case, the output signal of power stage circuit **101** can directly charge the battery device. When battery voltage V_{BAT} is greater than threshold voltage V_{TH1} but less than final voltage V_{CV} (e.g., final voltage V_{CV} can be about 8.4V if two lithium batteries are connected in series), step-up converter control circuit **102** can maintain output current I_{out} at a predetermined operating current (e.g., when the predetermined operating current is about 2 A, the corresponding trickle current can be about 200 mA), so as to charge the battery device with a substantially constant current.

When battery voltage V_{BAT} equals a level of final voltage V_{CV}, step-up converter control circuit **102** can control output voltage V_{out} to be equal to final voltage V_{CV} through the closed loop. In this way, the battery device can be charged with a substantially constant voltage. Note that the error between the output voltage and the battery voltage caused by the voltage drop of power transistor Q_1 can generally be ignored; however, output voltage V_{out} can be controlled to be slightly greater than the final voltage if considering the error). The substantially constant charging voltage can remain until the battery charging current is less than a shutdown current threshold value (e.g., about 100 mA, or less than about 100 mA). Step-up converter control circuit **102** can first turn off main switch S_1 to prevent inductor current in power stage circuit **101** from rising. When the inductor current is reduced to zero, synchronous switch S_2 and power transistor Q_1 can then be turned off (e.g., simultaneously) to complete the battery charging procedure.

To avoid power consumption due to current leakage from the battery device to the input of the step-up converter, synchronous switch S_2 and power transistor Q_1 can be turned off

ADC EX1006
IPR2025-00885

after the inductor current is reduced to zero. Similarly, if other protection responses occur besides the output short-circuit protection during charging (e.g., input overvoltage, output overvoltage, too slow, overtime, etc.), main switch S_1 may be turned off immediately. Further, the inductor current is reduced to zero, synchronous switch S_2 and power transistor Q_1 may be turned off (e.g., simultaneously).

Referring now to FIG. **3**, shown is a schematic block diagram of a third example step-up battery charger in accordance with embodiments of the present invention. In order to realize natural switching between constant voltage control and constant current control of the step-up converter, FIG. **3** shows a specific block diagram of an example step-up converter control circuit **102** based on the example shown in FIG. **2**. In this example, step-up converter control circuit **102** can include first, second, and third feedback circuits, a select circuit, and a pulse-width modulation (PWM) control circuit. The first feedback circuit can include transconductance amplifier **401** and compensation loop Z_{C1}, and may generate feedback signal V_{C1} according to an error between output voltage V_{out} and predetermined operating voltage V_{ref1}.

The second feedback circuit can include transconductance amplifier **402** and compensation loop Z_{C2}, and may generate feedback signal V_{C2} according to an error between output current I_{out} and predetermined operating current I_{ref1}. The third feedback circuit can include transconductance amplifier **403** and compensation loop Z_{C3}, and may generate feedback signal V_{C3} according to an error between battery voltage V_{BAT} and final voltage V_{CV}. These feedback signals can be provided to a select circuit that includes three diodes, and the lowest level signal of these feedback signals may be output to the PWM control circuit. For example, the PWM control circuit can be used to output switch control signals G_1 (for main switch S_1) and G_2 (for synchronous switch S_2).

When battery voltage V_{BAT} is less than threshold voltage V_{TH1}, the battery charging current can be far less than predetermined operating current I_{ref1} due to being regulated to be the trickle current. Further, battery voltage V_{BAT} can be far less than final voltage V_{CV}, so feedback signals V_{C2} and V_{C3} can be relatively high. Thus, feedback signal V_{C1} can be provided to the PWM control circuit, so as to maintain the output voltage at predetermined operation voltage V_{ref1}. When battery voltage V_{BAT} is greater than threshold voltage V_{TH1} but less than V_{CV}, output voltage V_{out} may be pulled down instantly, so feedback signal V_{C1} may be pulled up instantly. However, as battery voltage V_{BAT} may remain less than final voltage V_{CV}, feedback signal V_{C3} can be greater feedback signal V_{C2}, and feedback signal V_{C2} can be provided to the PWM control circuit to maintain the output current at predetermined operating current I_{ref1} to charge the battery device with a constant current.

When battery voltage V_{BAT} equals final voltage V_{CV}, feedback signal V_{C3} may become the lowest, and thus be provided to the PWM control circuit to charge the battery device with a constant voltage. Then, the battery charging current may begin to reduce, and when the battery charging current is less than the shutdown current threshold value, the charging procedure can be completed. The select circuit in step-up converter control circuit **102** can thus choose different feedback signals for controlling power stage circuit **101**, in order to realize natural switching from an initial charging state to different charging modes (e.g., constant current charging, constant voltage charging, etc.).

When step-up converter control circuit **102** changes from a constant voltage operation state to a constant current operation state, as the output voltage of power stage circuit **101** may drop instantly, feedback signal V_{C1} can again be the lowest feedback signal. As a result, the entire step-up converter may not successfully transition to a constant current operation state. For this particular case, "shield" signal "Nor" can be utilized. When battery voltage V_{BAT} is less than threshold voltage V_{TH1}, shield signal Nor can be inactive, and an inverted version of signal Nor can control the output of transconductance amplifier **402** to connect with input power supply V_{CC} to pull up feedback signal V_{C2}. When battery voltage V_{BAT} is greater than threshold voltage V_{TH1}, shield signal Nor can be active to control the output of transconductance amplifier **401** to connect with input power supply V_{CC} directly to pull up feedback signal V_{C1}. In some applications, the output of comparator **303** can be converted to be a high-low (e.g., digital) level signal as shield signal Nor after being filtered by the RC filter.

A compensation loop (e.g., Z_{C1}, Z_{C2}, Z_{C3} and Z_{C4}) connected with an output of a transconductance amplifier can include a capacitor or series connected capacitor and resistor, or any other suitable circuit structure. In particular embodiments, a step-up battery charger or charging management system can control the battery charging current to be a trickle current at an initial charging state by controlling switching operation of power transistor Q_1 in charging control circuit **201**. When the battery voltage reaches the threshold voltage value, the step-up battery charging management system can control the output signal of the step-up converter to directly charge the battery device with a constant current and/or a constant voltage.

When the battery device is abnormally connected to the charger or system, and the output of the step-up converter is connected to an energy-consuming load, the system can still function normally in a step-up circuit mode. In this case, input power supply V_{in} can be greater than an under-voltage lock-out threshold value, power transistor Q_1 in charging control circuit **201** can gradually be turned on to limit the surge current, and the step-up converter may operate in a constant voltage/constant current mode. However, in some cases, when the battery voltage is too low, a high charging current may damage the electronic device. Also, during constant current charging, too low of an input power supply may cause reduction of the input voltage.

Referring now to FIG. **4**, shown is a schematic block diagram of a fourth example step-up battery charger, in accordance with embodiments of the present invention. In this example, short-circuit protection circuit **501** and current-limiting protection circuit **601** can be added to the example shown in FIG. **3**. Short circuit protection circuit **501** can receive battery voltage V_{BAT} and short-circuit protection threshold value V_{SC}. During an initial battery charging stage, battery voltage V_{BAT} can be less than short-circuit protection threshold value V_{SC}, and the circuit may start to output a short-circuit protection response. If the battery device is connected normally, main switch S_1 can be turned off first, and power transistor Q_1 may operate in the linear region. Short-circuit protection circuit **501** can control the battery charging current to be a predetermined current value that is less than the trickle current (e.g., for two series connected lithium batteries, V_{sc} can be about 2V, the trickle current can be about 200 mA, and the predetermined current value can be about 100 mA). In this example, the output signal of short-circuit protection circuit **501** can be used to reduce the reference value at the non-inverting input of transconductance amplifier **302** such that the reference value can represent the predetermined current value.

Current-limiting protection circuit **601** can connect to the input of power stage circuit **101**, and DC input voltage V_{in} can be compared against a current limiting voltage threshold

ADC EX1006
IPR2025-00885

value. When DC input voltage is less than the current limiting voltage threshold value, current-limiting protection circuit **601** can limit the battery charging current so as to limit the input current of the step-up converter. The output signal of current-limiting protection circuit **601** can be used to reduce the charging current reference signal at the non-inverting input of transconductance amplifier **402** (see, e.g., a current-limiting protection circuit in Chinese Patent Application CN 201210516649.X).

Referring now to FIG. **5**, shown is a waveform diagram of the example step-up battery charger as shown in FIG. **4**, in accordance with embodiments of the present invention. With the current-limiting protection circuit and short-circuit protection circuit, when the battery voltage is too low, the charging current can be controlled to be lowered to effectively protect the electronic device (e.g., including the battery charger) and the battery device (e.g., a battery, series connected batteries, another load, etc.).

In some cases of abnormal battery connection to the charger or battery charging management system, if the battery device is replaced by an energy-consuming load (e.g., a resistor), main switch S_1 may be turned off first. Once the load voltage is less than threshold voltage V_{TH1}, power transistor control circuit **301** may control power transistor Q_1 to operate in the linear region to supply power for the load with a relatively low trickle current. Since the voltage of the energy-consuming load may not rise as slowly as the charging battery, once power transistor Q_1 enters the linear region, it may be difficult to change to a normal constant current or constant voltage operation state, and the battery charging current may be controlled as a discontinuous current.

In power transistor control circuit **301**, a waveform of the charging current reference signal received at the non-inverting input of transconductance amplifier **302** can be a discontinuous triangular wave, as shown in FIG. **6**. The peak value of the triangular wave can be greater than the corresponding load current when the output signal is threshold voltage V_{TH1}. Thus, when the battery charging current is controlled to be greater than the corresponding load current, the load voltage can be greater than threshold voltage V_{TH1}. Then, power transistor Q_1 may be turned on fully, and the output signal of the step-up converter can be used to supply power for the load. Of course, the waveform of the charging current reference signal may not be limited to the discontinuous triangular wave shown. Rather, other discontinuous waveforms (e.g., discontinuous sine half wave, discontinuous square wave, etc.) can also be utilized in particular embodiments.

Various control methods (e.g., peak current control, constant on time control, constant off time control, current hysteresis control, etc.) can be employed in particular embodiments. Referring now to FIG. **7**, shown is a schematic block diagram of a PWM control circuit with peak current control, in accordance with embodiments of the present invention. In this example, energy-saving control circuit **701** is included. Energy-saving control circuit **701** can utilize comparator **702** to receive battery charging current I_{chg} and energy-saving mode current threshold value I_{ECO}. When battery charging current I_{chg} is lower than energy-saving mode current threshold value I_{ECO}, the step-up battery charger can enter into an energy-saving mode. In this mode, the output of comparator **702** can turn off synchronous switch S_2 by a logic operation, and the synchronous rectifier step-up converter may operate in a non-synchronous state to lower switching losses and improve conversion efficiency.

In one embodiment, a method of controlling charging of a battery can include: (i) boosting, by a step-up converter, a DC input voltage to generate an output signal configured to charge a battery; (ii) comparing a battery voltage against a threshold voltage, where the threshold voltage is greater than the DC input voltage; (iii) regulating the output signal to maintain a battery charging current to be a trickle current when the battery voltage is less than the threshold voltage; and (iv) charging the battery directly by the output signal when the battery voltage is greater than the threshold voltage.

Referring now to FIG. **8**, shown is a flow diagram of an example control method for a step-up battery charger, in accordance with embodiments of the present invention. In particular embodiments, the output energy of a step-up converter can be controlled and utilized to charge a battery device. For example, at **802**, an output signal can be generated (e.g., by a step-up converter) by boosting a DC input voltage. At **804**, a battery voltage can be compared against a threshold value (e.g., V_{TH1}). If at **806**, the battery voltage is less than the threshold voltage, at **808** the output signal from the step-up converter can be regulated (e.g., by charging control circuit **201**) to maintain a battery charging current as a trickle current. However, if at **806**, the battery voltage is greater than the threshold voltage, the battery device can be directly charged by the output signal from the step-up converter. For example, the threshold voltage can be greater than the DC input voltage.

Control of the battery charging current can also include connecting terminals of a power transistor (e.g., in charging control circuit **201**) between the output of the step-up converter and the battery device, and regulating (e.g., via power transistor control circuit **301**) the control voltage of the power transistor to operate in a linear region. This can effectively regulate the battery charging current to be a trickle current when the battery voltage is less than the threshold voltage. The power transistor (e.g., Q_1) may be controlled to be in a fully conducting state (e.g., a saturation mode) when the battery voltage is greater than the threshold voltage.

Control of the output signal of the step-up converter can also include maintaining an output voltage of the step-up converter to be a predetermined operating voltage when the battery voltage is less than the threshold voltage. For example, the predetermined operating voltage can be greater than the threshold voltage. The output current of the step-up converter can be maintained as the predetermined operating current when the battery voltage is greater than the threshold voltage, but less than a final voltage. Also, the output voltage of the step-up converter can be maintained as a final value when the battery voltage equals the final voltage, and the step-up converter may be disabled until the battery charging current is less than a shut-down current threshold value.

The example control method for the output signal of the step-up converter can also include generating a first feedback signal (e.g., V_{C1}) according to an error between the voltage value of the output signal and the predetermined operating voltage, generating a second feedback signal (e.g., V_{C2}) according to an error between the current value of the output signal and the predetermined operating current, generating a third feedback signal (e.g., V_{C3}) according to an error between the battery voltage and the final voltage, and controlling the switching operation (e.g., via the PWM control circuit) of the step-up converter according to the lowest one (e.g., via a select circuit) of the first, second, and third feedback signals.

Furthermore, the example control method can include selectively pulling up the first feedback signal or the second feedback signal according to a comparison result of the battery voltage against the threshold voltage. With a current limiting protection function, the control method can also include limiting the battery charging current when the DC

ADC EX1006
IPR2025-00885

input voltage is less than a current limiting threshold value such that the input current of the step-up converter is limited.

As part of a short-circuit protection function, the control method can also include controlling the battery charging current to be a predetermined current value when the battery voltage is less than a short-circuit protection threshold value, where the predetermined current value is less than the trickle current. Also, the battery charging current can be controlled to be a discontinuous current when an energy-consuming load is connected to the step-up converter instead of the battery device, and a load voltage is less than the threshold voltage. The maximum value of the battery charging current can also be greater than the corresponding current when the output signal is the threshold voltage.

In particular embodiments, the step-up converter can have any suitable converter topology (e.g., Boost, Buck-Boost, Sepic, Cuk, Zeta, etc.). Further, when the topology of the step-up converter is a synchronous rectifier boost converter, the synchronous switch can be controlled to be off when the battery charging current is less than the energy-saving mode current threshold value.

The embodiments were chosen and described in order to best explain the principles of the invention and its practical applications, to thereby enable others skilled in the art to best utilize the invention and various embodiments with modifications as are suited to the particular use contemplated. It is intended that the scope of the invention be defined by the claims appended hereto and their equivalents.

What is claimed is:

1. A battery charger, comprising:

a) a step-up converter configured to generate an output signal by boosting a DC input voltage, wherein a threshold voltage is greater than said DC input voltage;

b) a charging control circuit configured to receive said output signal from said step-up converter, and to control charging of a battery;

c) said charging control circuit being configured to regulate said output signal by a power transistor operating in a linear region to maintain a charging current for said battery charging as a trickle current when a battery voltage is less than said threshold voltage, wherein said power transistor is coupled between said step-up converter and said battery; and

d) said charging control circuit being configured to charge said battery directly by said output signal by said power transistor operating in a saturation region when said battery voltage is greater than said threshold voltage.

2. The battery charger of claim **1**, wherein said power transistor

c) comprises a parasitic diode having an anode coupled to said battery, and a cathode coupled to said step-up converter.

3. The battery charger of claim **1**, wherein said step-up converter comprises:

a) a power stage circuit having a switching operation controlled by a step-up converter control circuit to maintain said output signal to be substantially constant;

b) said step-up converter control circuit being configured to maintain a voltage of said output signal to be a predetermined operating voltage when said battery voltage is less than said threshold voltage, wherein said predetermined operating voltage is greater than said threshold voltage;

c) said step-up converter control circuit being configured to maintain a current of said output signal to be a predetermined operating current when said battery voltage is greater than said threshold voltage and less than a final voltage; and

d) said step-up converter control circuit being configured to maintain said voltage of said output signal to be said final voltage when said battery voltage equals said final voltage and said battery charging current is not less than a shut-down current threshold, wherein said step-up converter is disabled when said battery charging current is less than said shut-down current threshold.

4. The battery charger of claim **3**, wherein said step-up converter control circuit comprises:

a) a first feedback circuit configured to generate a first feedback signal according to an error between said voltage of said output signal and said first operating voltage;

b) a second feedback circuit configured to generate a second feedback signal according to an error between said current of said output signal and said first operating current;

c) a third feedback circuit configured to generate a third feedback signal according to an error between said battery voltage and said final voltage;

d) a selection circuit configured to output a lowest of said first, second, and third feedback signals; and

e) a pulse-width modulation (PWM) control circuit configured to control said switching operation of said power stage circuit according to said output of said selection circuit.

5. The battery charger of claim **4**, wherein said first and second feedback circuits are configured to receive a shield signal that selectively increase a value of said first feedback signal or said second feedback signal according to a comparison result of said battery voltage and said threshold voltage.

6. The battery charger of claim **1**, further comprising a current-limiting protection circuit configured to limit said battery charging current to limit an input current of said step-up converter when said DC input voltage is less than a current limiting threshold.

7. The battery charger of claim **1**, further comprising a short-circuit protection circuit configured to control said battery charging current to be a first current value that is less than said trickle current when said battery voltage is less than a short-circuit protection threshold value.

8. The battery charger of claim **7**, wherein said short-circuit protection circuit is configured to control said battery charging current to be a discontinuous current, wherein a maximum value of said battery charging current is greater than a corresponding current when said output signal is said threshold voltage, when an energy-consuming load is connected to said step-up converter, and a load voltage is less than said threshold voltage.

9. The battery charger of claim **1**, wherein a topology of said step-up converter comprises at least one of: Boost, Buck-Boost, Sepic, Cuk, and Zeta.

10. The battery charger of claim **1**, further comprising an energy-saving control circuit when a topology of said step-up converter is configured as a synchronous rectifier boost converter, wherein said energy-saving control circuit is configured to control a synchronous switch to be off when said battery charging current is less than an energy-saving mode current threshold value.

11. A method of controlling charging of a battery, the method comprising:

a) boosting, by a step-up converter, a DC input voltage to generate an output signal configured to charge a battery;

b) comparing, by a comparator, a battery voltage against a threshold voltage, wherein said threshold voltage is greater than said DC input voltage;

c) regulating, by a power transistor operating in a linear region, said output signal to maintain a battery charging current to be a trickle current when said battery voltage is less than said threshold voltage, wherein said power transistor is coupled between said step-up converter and said battery; and

d) charging, by said power transistor operating in a saturation region, said battery directly by said output signal when said battery voltage is greater than said threshold voltage.

12. The method of claim **11**, wherein

comprises a parasitic diode having an anode coupled to said battery, and a cathode coupled to said step-up converter.

13. The method of claim **11**, further comprising:

a) maintaining an output voltage of said step-up converter to be a predetermined operating voltage when said battery voltage is less than said threshold voltage, wherein said predetermined operating voltage is greater than said threshold voltage;

b) maintaining an output current of said step-up converter to be a predetermined operating current when said battery voltage is greater than said threshold voltage and less than a final voltage; and

c) maintaining said output voltage of said step-up converter to be said final voltage when said battery voltage equals said final voltage and said battery charging current is not less than a shut-down current threshold, wherein said step-up converter is disabled when said battery charging current is less than a said shut-down current threshold.

14. The method of claim **13**, further comprising:

a) generating a first feedback signal according to an error between a voltage value of said output signal and said predetermined operating voltage;

b) generating a second feedback signal according to an error between a current value of said output signal and said predetermined operating current;

c) generating a third feedback signal according to an error between said battery voltage and said final voltage;

d) controlling the switching operation of said step-up converter according to the lowest one of said first feedback signal, said second feedback signal, and said third feedback signal.

15. The method of claim **14**, further comprising selectively increasing a value of said first feedback signal or said second feedback signal according to a comparison result of said battery voltage and said threshold voltage.

16. The method of claim **11**, further comprising limiting said battery charging current when said DC input voltage is less than a current limiting threshold value in order to limit an input current of said step-up converter.

17. The method of claim **11**, further comprising controlling said battery charging current to be a predetermined current value when said battery voltage is less than a short-circuit protection threshold value, wherein said predetermined current value is less than said trickle current.

18. The method of claim **11**, further comprising controlling said battery charging current to be a discontinuous current when an energy-consuming load is coupled to said step-up converter instead of said battery and a load voltage is less than said threshold voltage, wherein a maximum value of said battery charging current is greater than a corresponding current when said output signal is equal to said threshold voltage.

19. The method of claim **11**, wherein a topology of said step-up converter comprises at least one of: Boost, Buck-Boost, Sepic, Cuk, and Zeta.

20. The method of claim **11**, further comprising controlling a synchronous switch to be off when said battery charging current is less than an energy-saving mode current threshold value.

* * * * *