US009219372B2

(12) **United States Patent**
Paparrizos et al.

(10) **Patent No.: US 9,219,372 B2**
(45) **Date of Patent: Dec. 22, 2015**

(54) **BUCK BOOST CHARGING FOR BATTERIES**

(71) Applicant: **QUALCOMM Incorporated**, San Diego, CA (US)

(72) Inventors: **Georgios K Paparrizos**, Foster City, CA (US); **Crown Sen Shieh**, Santa Clara, CA (US); **Shadi Hawawini**, San Jose, CA (US)

(73) Assignee: **QUALCOMM Incorporated**, San Diego, CA (US)

(*) Notice: Subject to any disclaimer, the term of this patent is extended or adjusted under 35 U.S.C. 154(b) by 284 days.

(21) Appl. No.: **13/747,186**

(22) Filed: **Jan. 22, 2013**

(65) **Prior Publication Data**

US 2014/0203761 A1 Jul. 24, 2014

(51) **Int. Cl.**

H02J 7/00	(2006.01)
H02M 3/158	(2006.01)
H02J 7/02	(2006.01)
H02M 1/00	(2007.01)

(52) **U.S. Cl.**
CPC ***H02J 7/0052*** (2013.01); ***H02J 7/022*** (2013.01); ***H02M 3/1582*** (2013.01); *H02M 2001/0009* (2013.01)

(58) **Field of Classification Search**
CPC H02J 7/0052; H02J 90/127
USPC 320/107, 137–141, 145, 149
See application file for complete search history.

(56) **References Cited**

U.S. PATENT DOCUMENTS

5,714,863	A *	2/1998	Hwang et al.	320/166
5,734,258	A	3/1998	Esser	
7,863,865	B2	1/2011	Hussain et al.	
2005/0093526	A1	5/2005	Notman	
2009/0108677	A1	4/2009	Walter et al.	
2009/0174366	A1	7/2009	Ahmad et al.	
2010/0231172	A1	9/2010	Bastami et al.	
2012/0169126	A1 *	7/2012	Totterman et al.	307/66
2012/0268075	A1 *	10/2012	Wolf et al.	320/132

OTHER PUBLICATIONS

Texas Instruments, "Battery chargers in USB OTG devices", SSZY001, Texas Instruments Incorporated, Jun. 2010, 6pgs.
Huang H-W., et al., "Dithering Skip Modulator with a Novel Load Sensor for Ultra-wide-load High-Efficiency DC-DC Converters", Low Power Electronics and Design. 2006 . ISLPED'06, Proceedings of the 2006 International Symposium on, IEEE, PI, Oct. 1, 2006, pp. 388-393, XP031115588, ISBN: 978-1-59593-462-8 p. 389; figure 3.
International Search Report and Written Opinion—PCT/US2013/022703—ISA/EPO—Oct. 17, 2013.

(Continued)

Primary Examiner — Paul Dinh
(74) *Attorney, Agent, or Firm* — Fountainhead Law Group P.C.

(57) **ABSTRACT**

Disclosed is a battery charging circuit having several operating modes include boost and buck mode, and forward and reverse mode. A power train and a current sensing block may share power transistors thus reducing the number of space-consuming power devices in the circuit. The current sensing block may indicate output current based only a sensed input current, and vice versa.

19 Claims, 16 Drawing Sheets

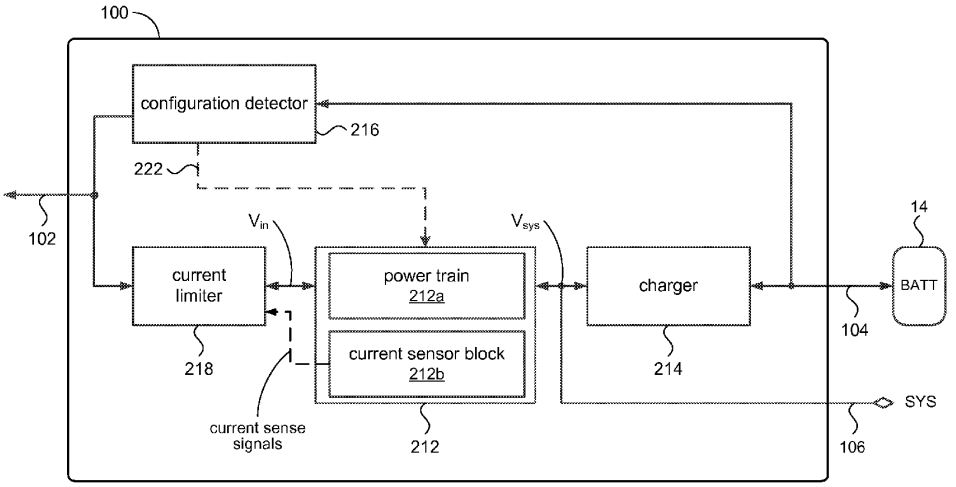

ADC EX1009
IPR2025-00885

(56) **References Cited**

OTHER PUBLICATIONS

Rao S., et al., "A 1.2-A Buck-Boost LED Driver With On-Chip Error Averaged Sense FET-Based Current Sensing Technique", IEEE Journal of Solid-State Circuits, IEEE Service Center, Piscataway, NJ, USA, vol. 46, No. 12, Dec. 1, 2011, pp. 2772-2783, XP011379197.

Ren X., et al., "Three-Mode Dual-Frequency Two-Edge Modulation Scheme for Four-Switch Bucka Boost Converter", IEEE Transactions on Power Electronics, IEEE Service Center, Piscataway, NJ, US, vol. 24, No. 2, Feb. 1, 2009, pp. 499-509, XP011249604.

* cited by examiner

ADC EX1009
IPR2025-00885

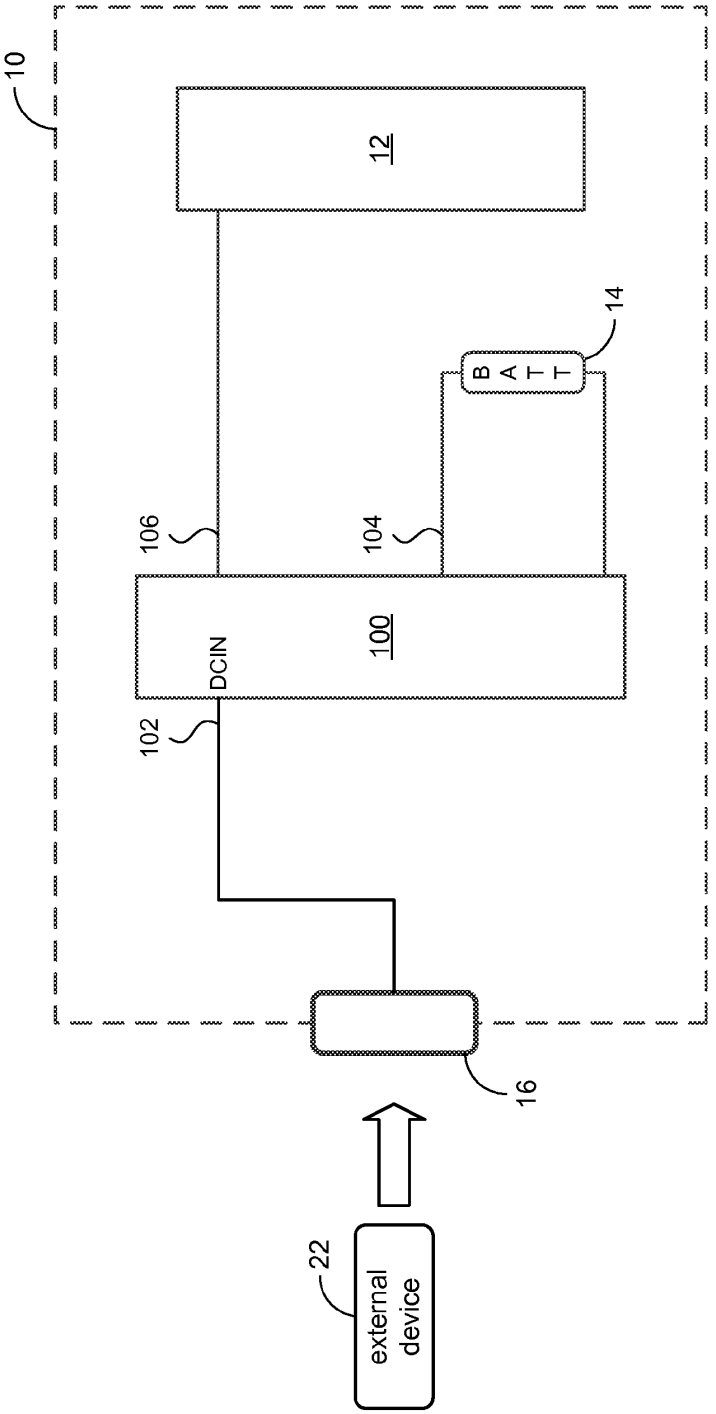

Fig. 1

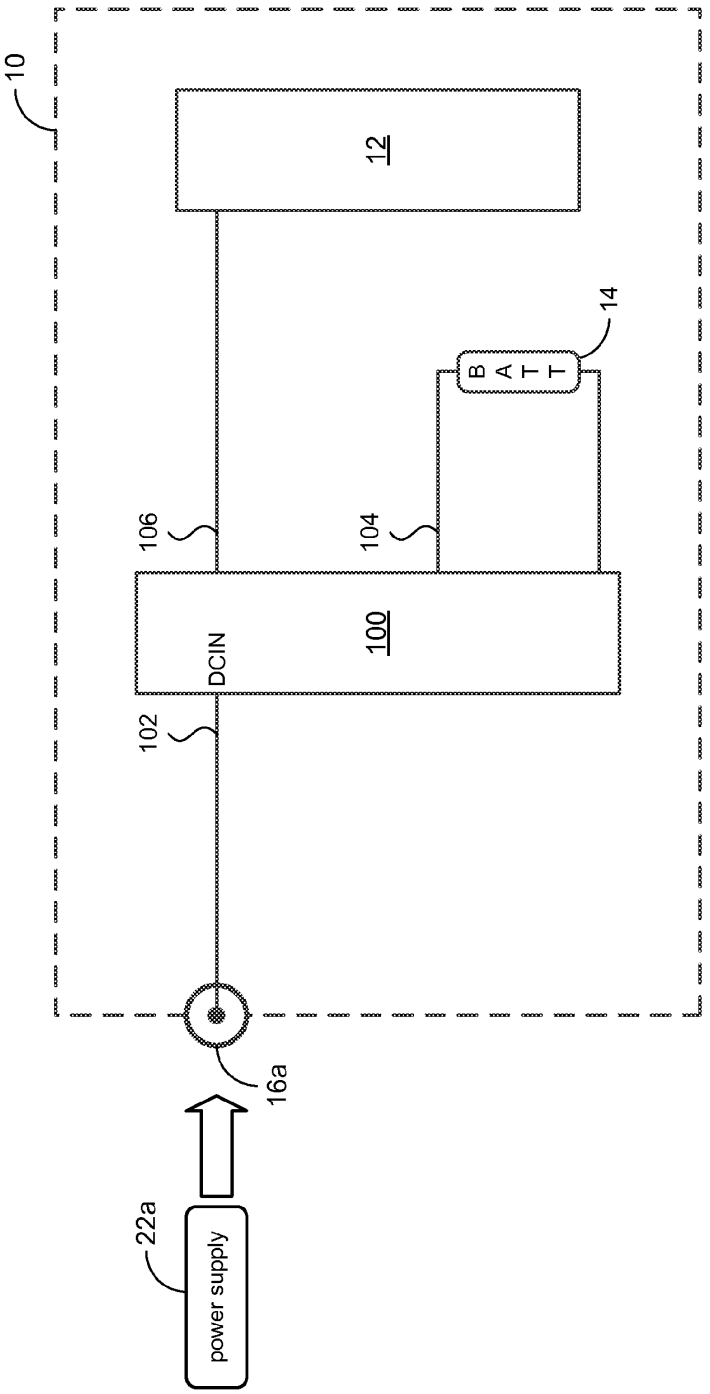

Fig. 1A

ADC EX1009
IPR2025-00885

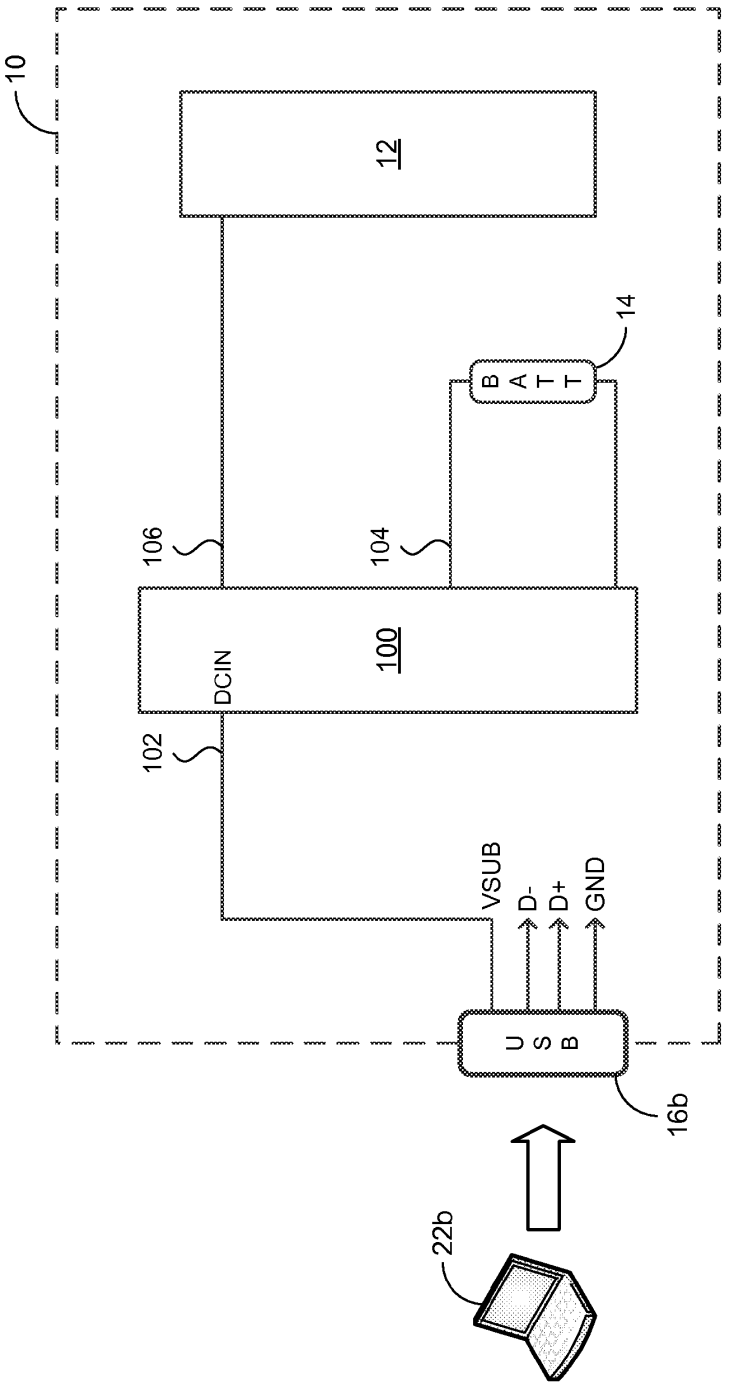

Fig. 1B

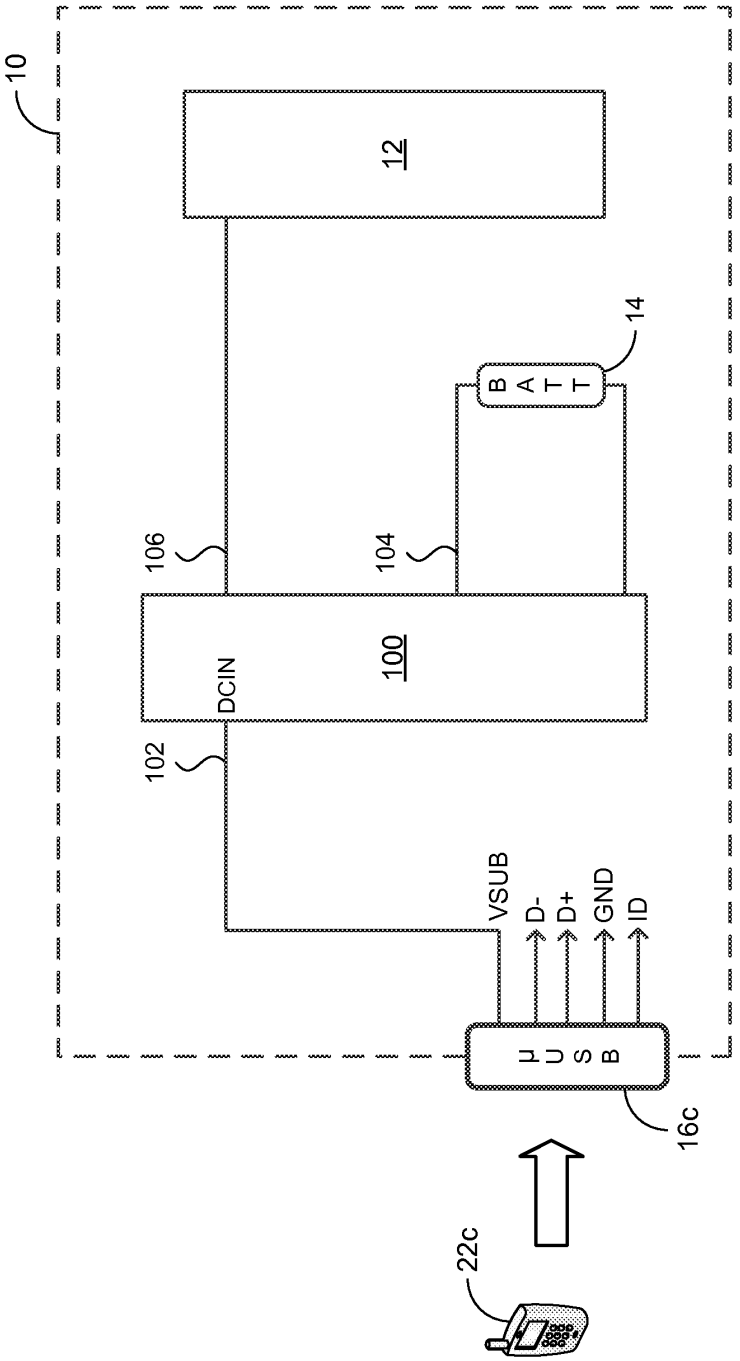

Fig. 1C

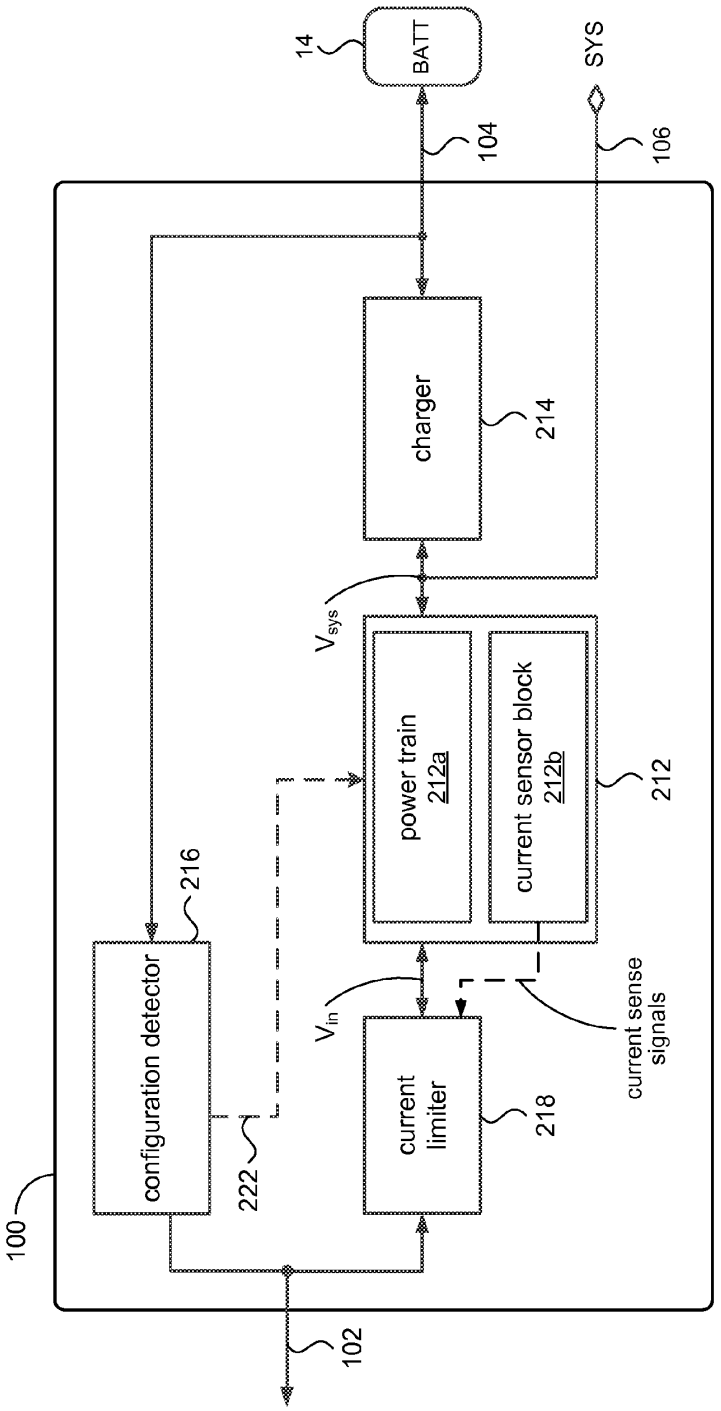
14
BATT
104
SYS
106
charger
214
V_{sys}
power train
212a
current sensor block
212b
212
216
configuration detector
V_{in}
current sense
signals
current
limiter
218
222
100
102

Fig. 2

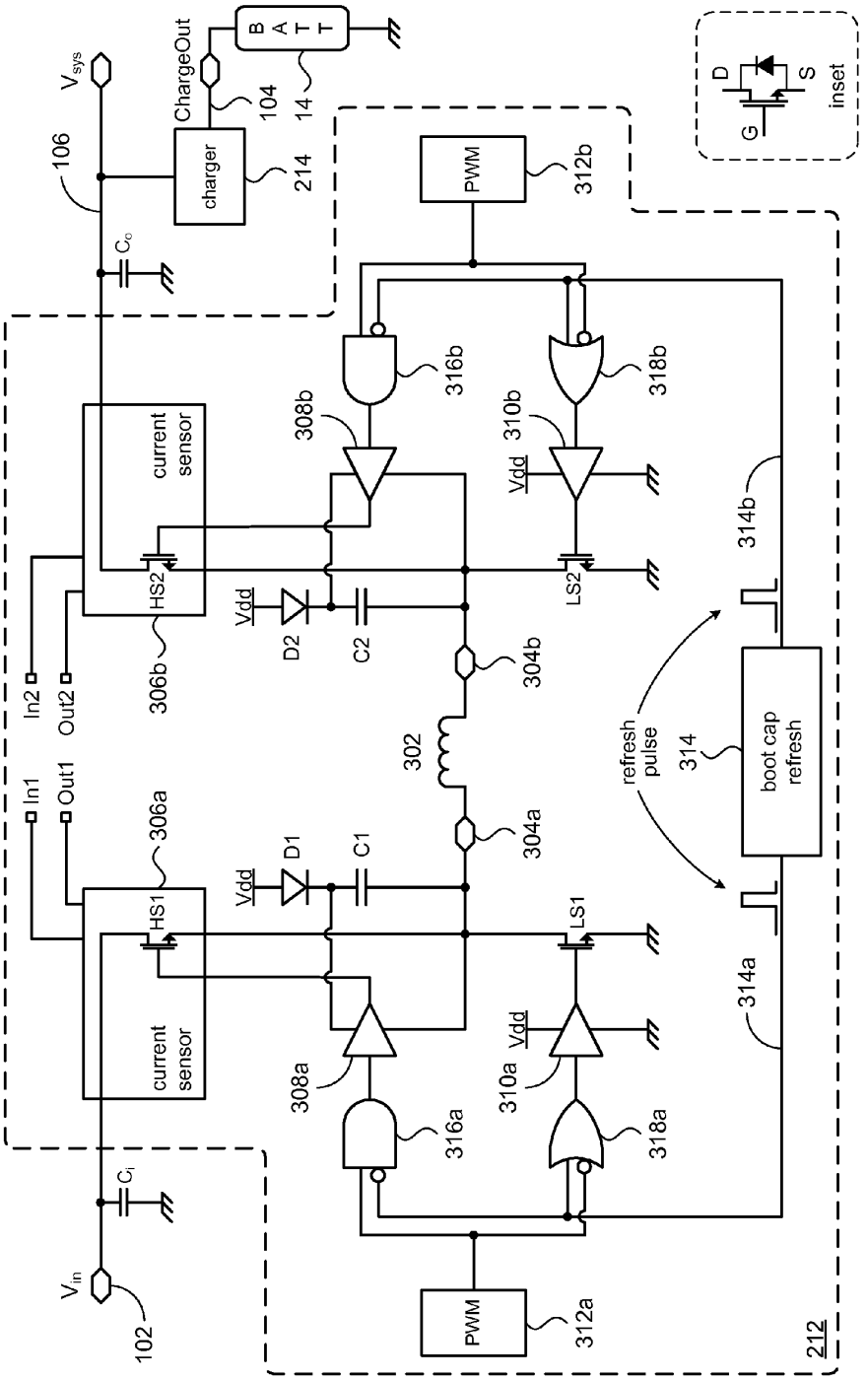

Fig. 3

ADC EX1009
IPR2025-00885

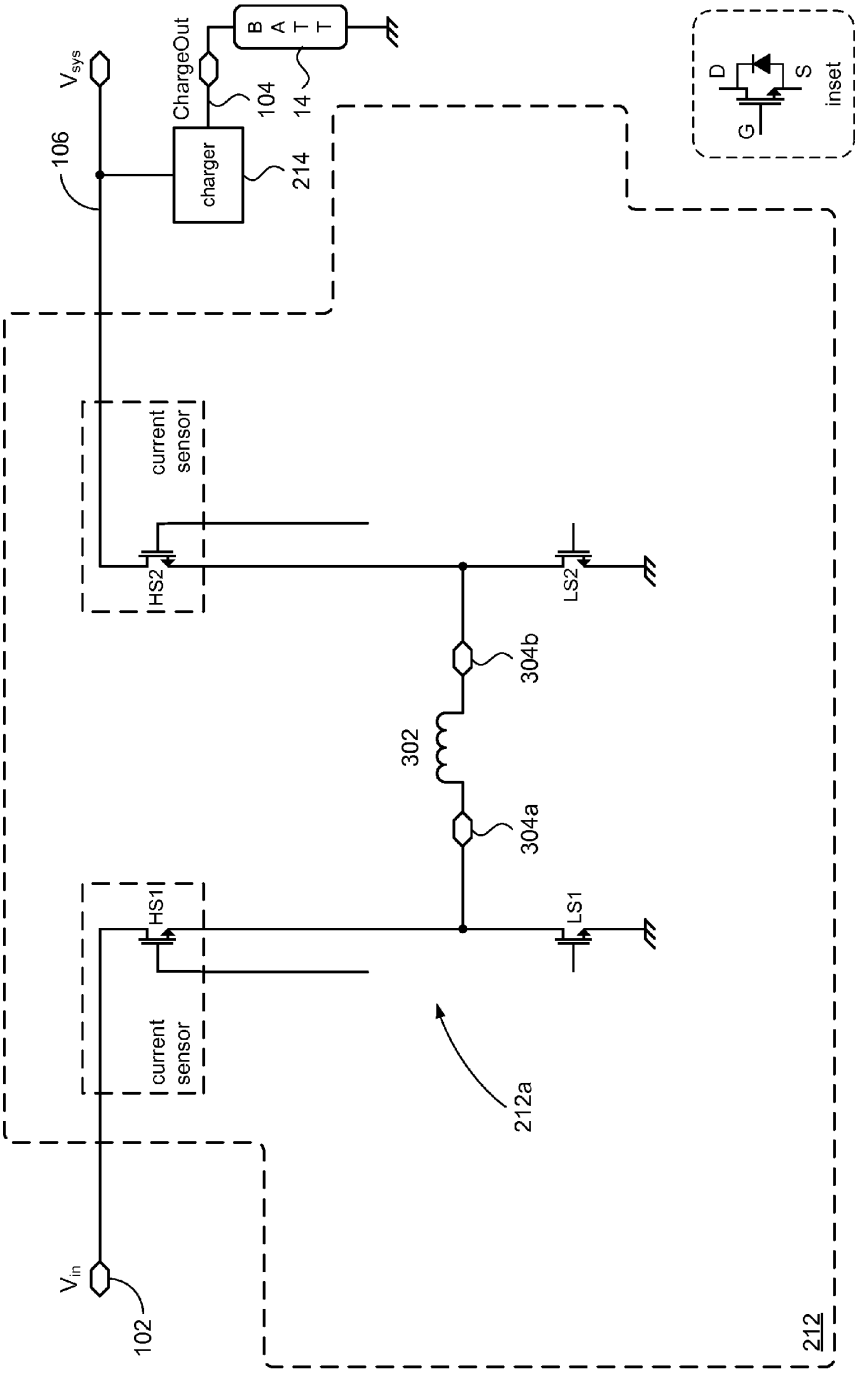
V_{sys}
106
ChargeOut
104
BATT
14
charger
214
D
S
G
inset
current sensor
HS2
LS2
304b
302
304a
HS1
LS1
current sensor
212a
V_{in}
102
212

Fig. 3A

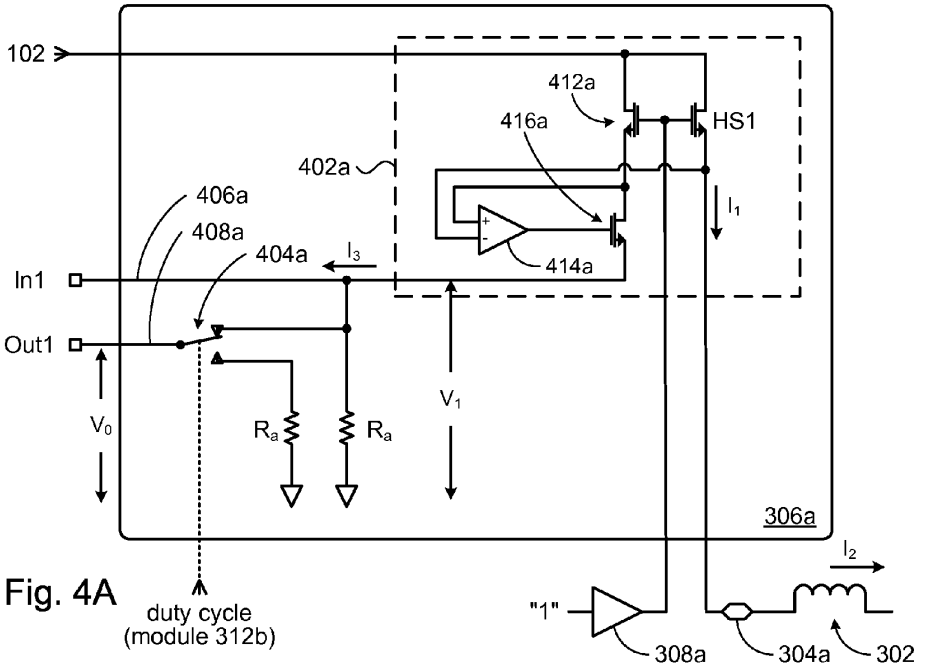
102
412a
416a
HS1
402a
406a
408a
404a
I_3
I_1
414a
In1
Out1
V_0
R_a
R_a
V_1
306a
I_2
"1"
duty cycle
(module 312b)
308a
304a
302

Fig. 4A

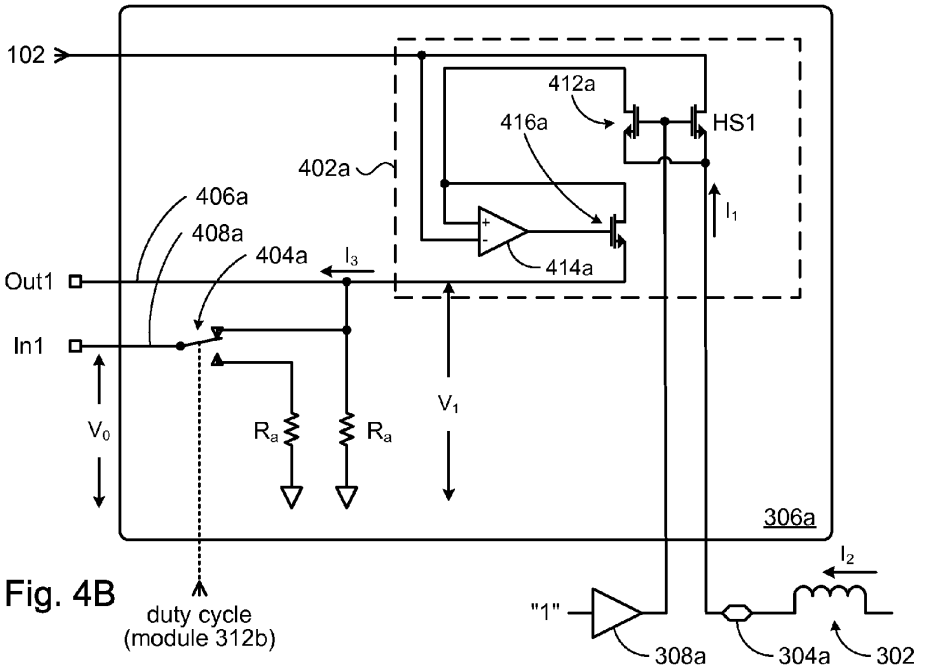
102
412a
416a
HS1
402a
406a
408a
404a
I_3
I_1
414a
Out1
In1
V_0
R_a
R_a
V_1
306a
I_2
"1"
duty cycle
(module 312b)
308a
304a
302

Fig. 4B

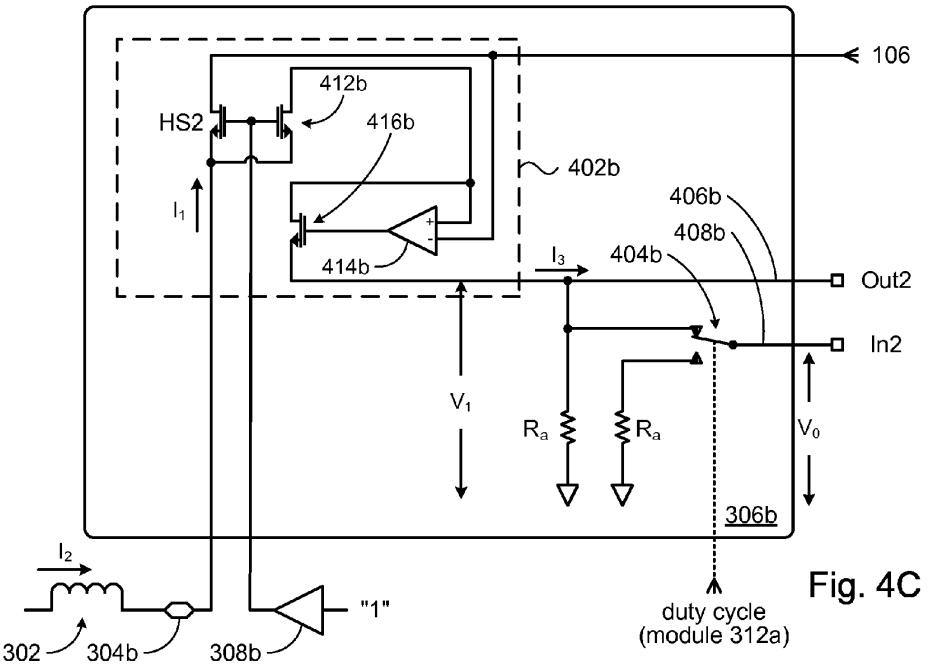
106
412b
HS2
416b
402b
406b
408b
I_1
I_3
404b
414b
Out2
In2
V_1
R_a
R_a
V_0
306b
I_2
"1"
duty cycle
(module 312a)
302
304b
308b

Fig. 4C

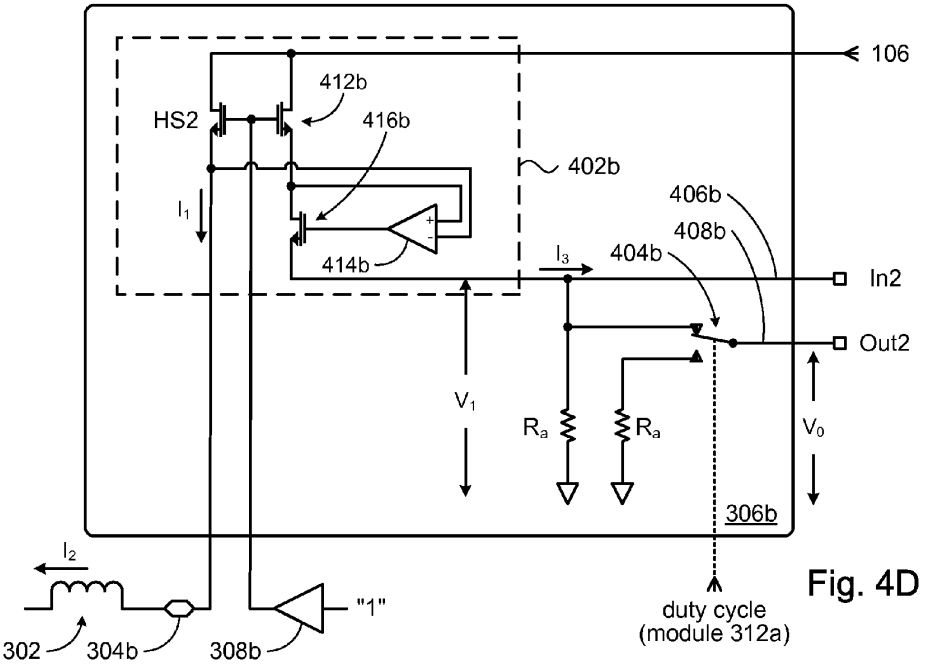
106
412b
HS2
416b
402b
406b
408b
I_1
I_3
404b
414b
In2
Out2
V_1
R_a
R_a
V_0
306b
I_2
"1"
duty cycle
(module 312a)
302
304b
308b

Fig. 4D

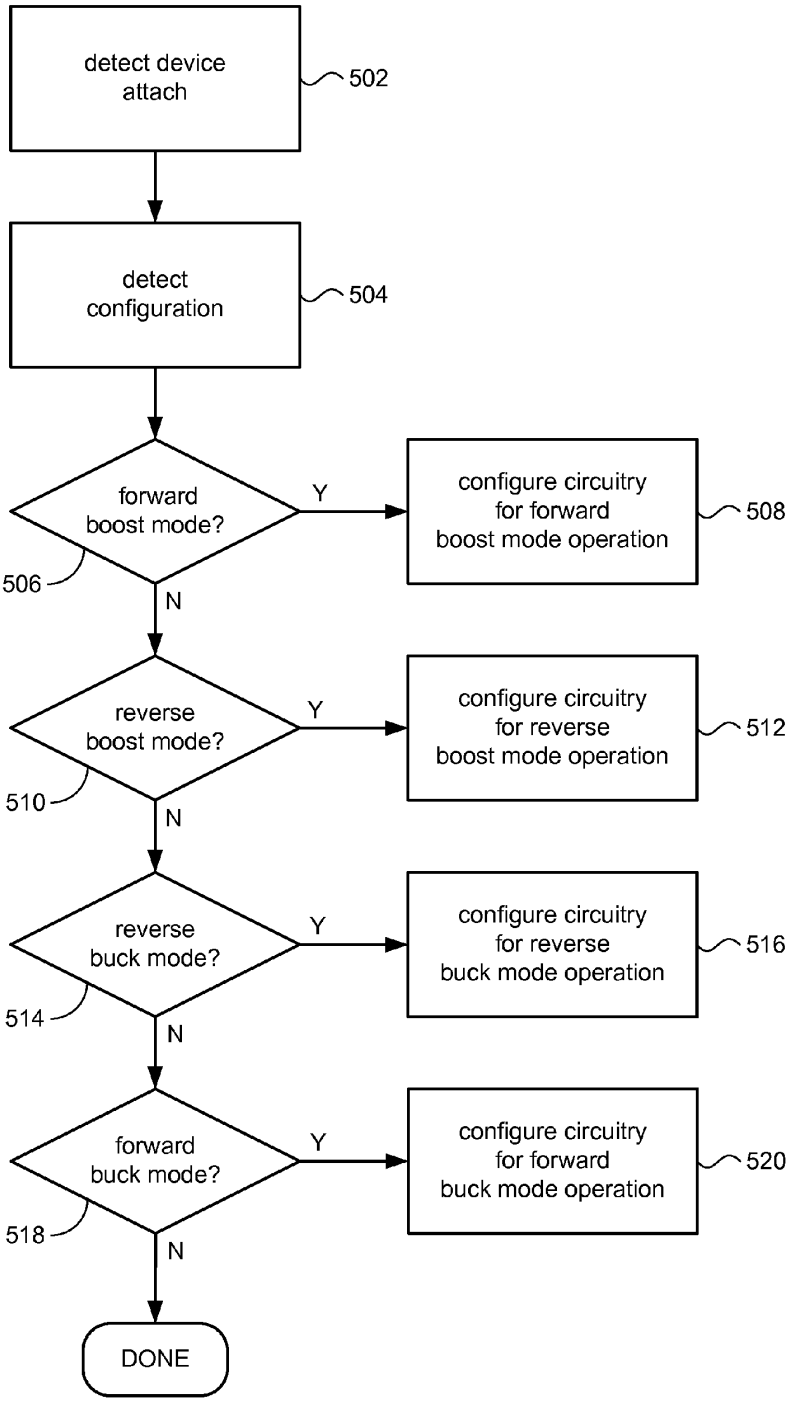
detect device attach
502
detect configuration
504
forward boost mode?
506
Y
N
configure circuitry for forward boost mode operation
508
reverse boost mode?
510
Y
N
configure circuitry for reverse boost mode operation
512
reverse buck mode?
514
Y
N
configure circuitry for reverse buck mode operation
516
forward buck mode?
518
Y
N
configure circuitry for forward buck mode operation
520
DONE

Fig. 5

600

operation mode	PWM module 312a	PWM module 312b	HS1	LS1	HS2	LS2	boot cap refresh signal 314a	boot cap refresh signal 314b
forward boost conversion	HI	$duty_{f1}$	ON	OFF	switching	switching	LO	LO
reverse buck conversion	HI	$duty_{f2}$	ON	OFF	switching	switching	LO	LO
forward buck conversion	$duty_{f3}$	HI	switching	switching	ON	OFF	LO	LO
reverse boost conversion	$duty_{f4}$	HI	switching	switching	ON	OFF	LO	LO

Fig. 6

ADC EX1009
IPR2025-00885

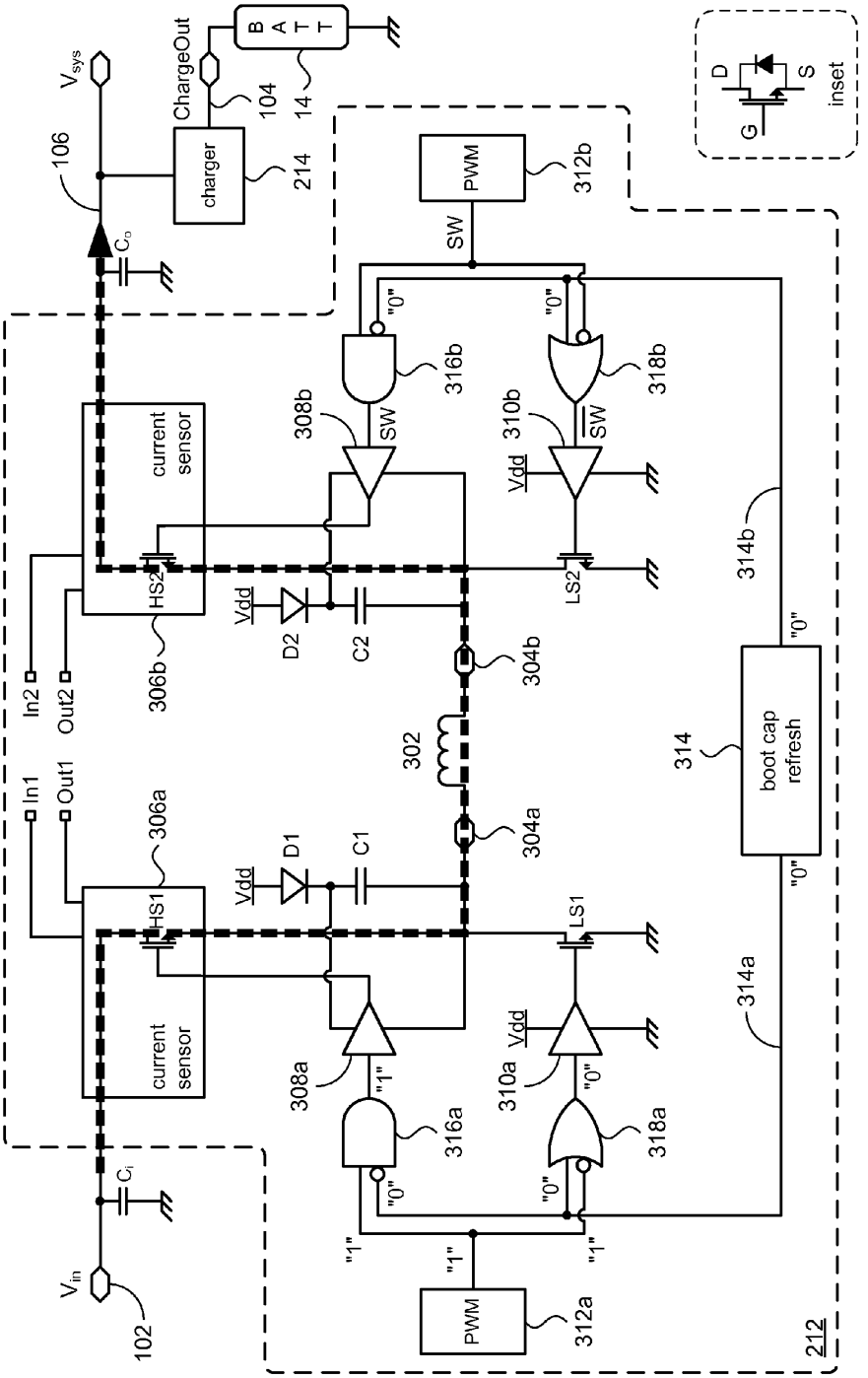
V_{sys}
106
C_o
ChargeOut
104
charger
214
BATT
14
PWM
312b
SW
"0"
316b
318b
308b
310b
current sensor
HS2
LS2
Vdd
D2
C2
304b
302
304a
306b
In2
Out2
In1
Out1
306a
HS1
D1
C1
LS1
308a
310a
316a
318a
"1"
C_i
V_{in}
102
PWM
312a
314b
314
boot cap refresh
314a
212
D
S
G
inset

Fig. 7A

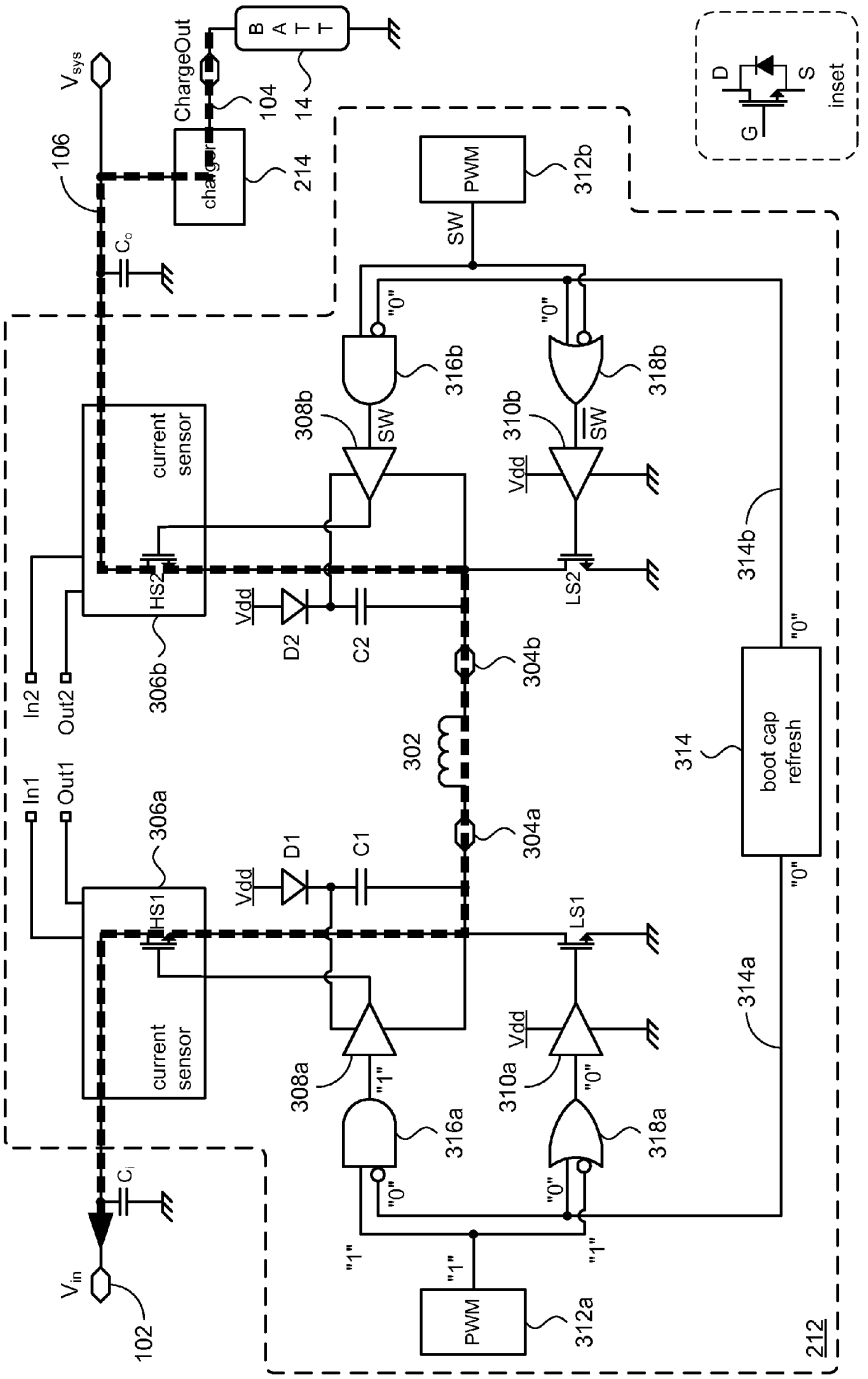

Fig. 7B

ADC EX1009
IPR2025-00885

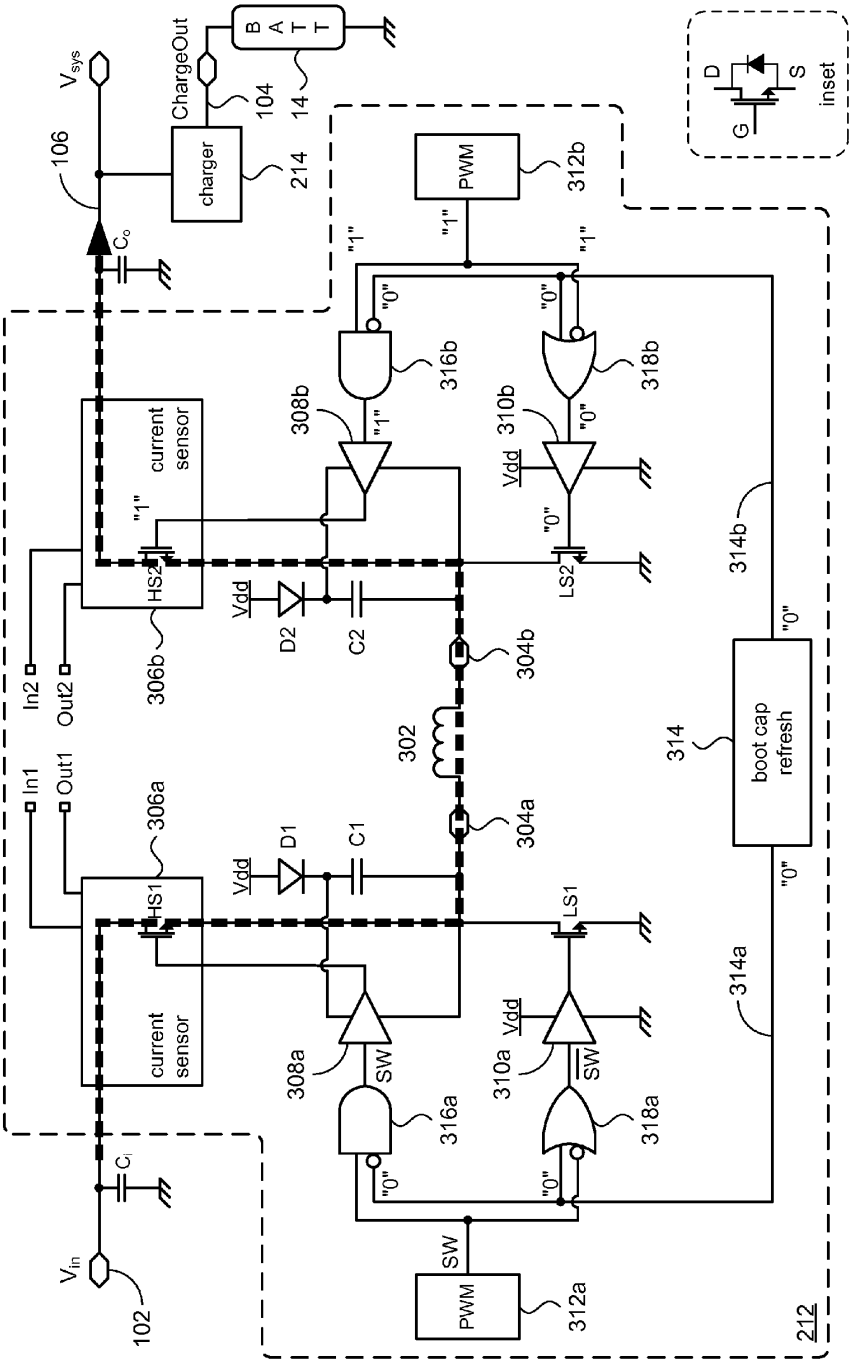
V_{sys}
106
C_o
ChargeOut
charger
214
104
BATT
14
PWM
312b
"1"
"0"
316b
318b
308b
310b
Vdd
current sensor
HS2
LS2
306b
D2
C2
304b
302
304a
In2
Out2
In1
Out1
306a
HS1
D1
C1
LS1
308a
310a
SW
316a
318a
C_i
V_{in}
102
PWM
312a
314b
314
boot cap refresh
314a
212
inset
D
S
G

Fig. 7C

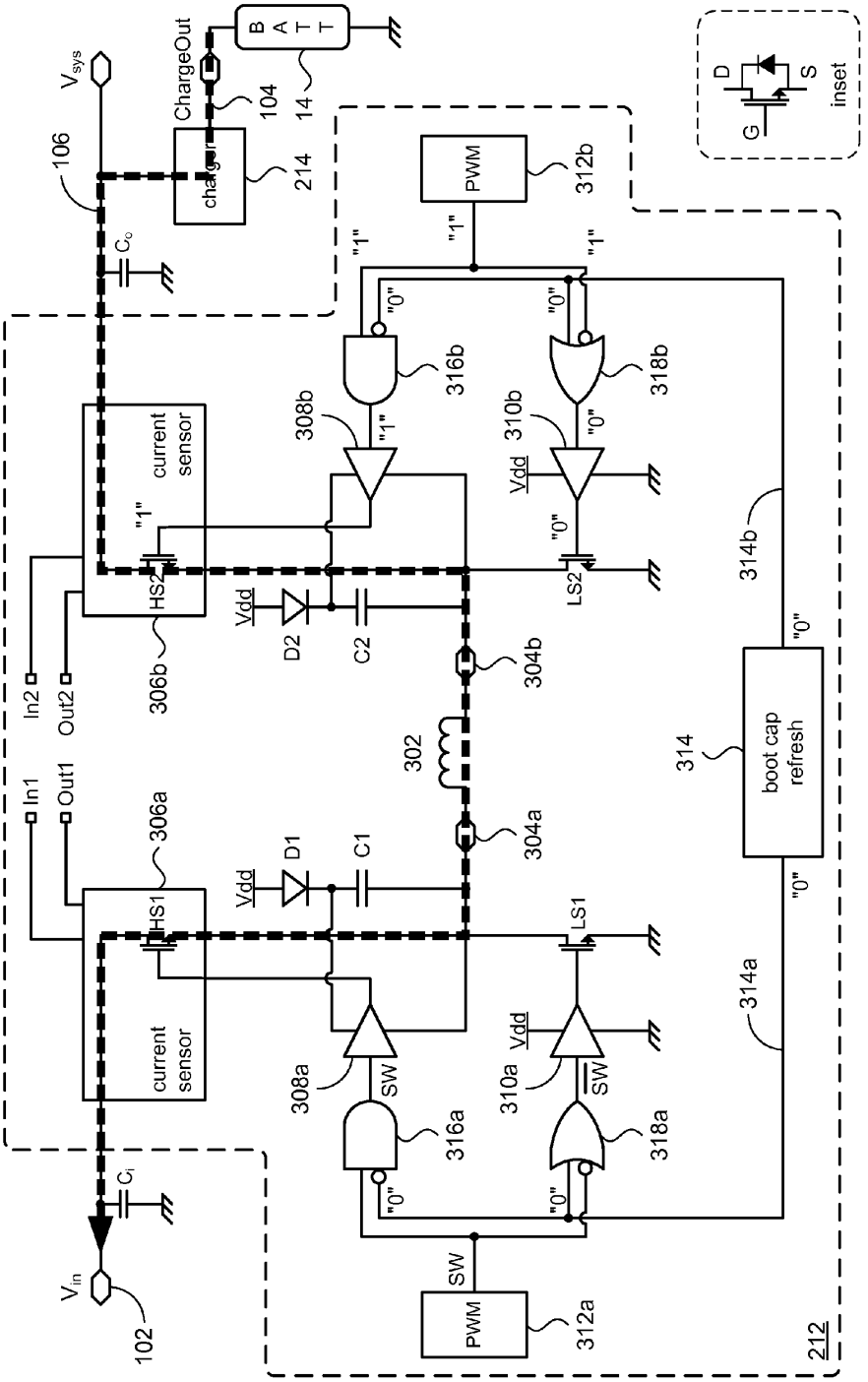

Fig. 7D

ADC EX1009
IPR2025-00885

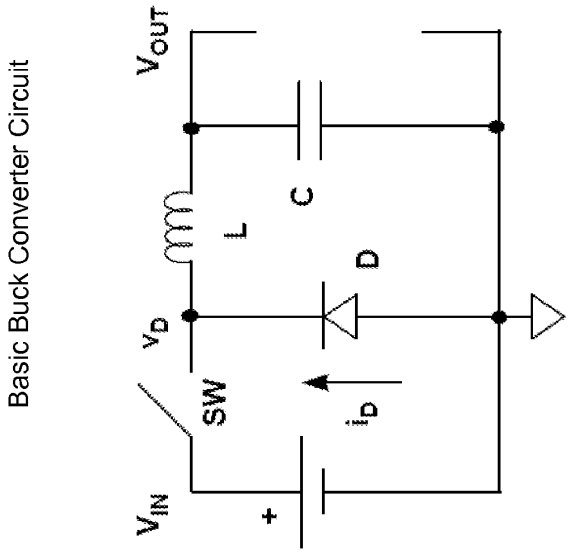

Fig. 8B
(prior art)

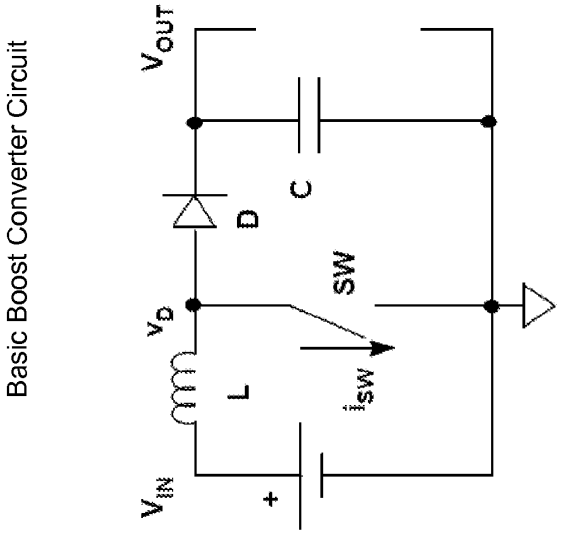

Fig. 8A
(prior art)

BUCK BOOST CHARGING FOR BATTERIES

BACKGROUND

Unless otherwise indicated herein, the approaches described in this section are not prior art to the claims in this application and are not admitted to be prior art by inclusion in this section.

Computer tablets and other mobile devices, such as mobile phones, digital SLR cameras, video recorders, audio devices, and so on are moving to battery packs with two (or more) Li-ion cells in series (so-called "2S" or "3S" stacks or cells). Battery voltages of multi-stack battery packs typically range from 3.0V to 8.4V. Such devices typically are provided with their own power adapters for charging the high voltage battery packs.

The USB specification has become very popular and consumers have become used to being able to charge their USB devices from universal USB power sources. Consumers are used to USB, mini-USB, and micro-USB connectors being present in portable electronics and their use for battery charging from a USB power source. However, since a large majority of USB devices are defined at 5V, it may not be possible to charge high voltage (>5V) 2S or 3S battery packs using a typically USB power source.

SUMMARY

A battery charging circuit in accordance with the present disclosure may include first and second terminals. In some embodiments, power received at the first terminal (e.g., via a power source) may be delivered to a device at the second terminal (e.g., electronics or a battery), and vice-versa. The battery charging circuit may operate in buck mode (power stepped down) or boost (power stepped up) mode, and in the forward mode (power from first terminal delivered to second terminal) or reverse mode (power from the second terminal delivered to the first terminal).

In some embodiments, the battery charging circuit may include a current sensor for sensing current in the one terminal and deriving an indication of current flow in the other terminal based on current flowing in the one terminal.

In some embodiments, the battery charging circuit may include a power train that shares one or more power transistor devices with the current sensor, thereby reducing the space requirement of the circuit.

The following detailed description and accompanying drawings provide a better understanding of the nature and advantages of the present disclosure.

BRIEF DESCRIPTION OF THE DRAWINGS

FIG. **1** illustrates a general block diagram of an electronic device that incorporates a battery charging circuit according to the present disclosure.

FIGS. **1**A, **1**B, and **1**C illustrate specific illustrative examples of FIG. **1**.

FIG. **2** is a high level block diagram of a battery charging circuit according to the present disclosure.

FIG. **3** is a high level block diagram of a buck boost circuit according to the present disclosure.

FIG. **3**A is a simplified view of FIG. **3** showing the power train.

FIGS. **4**A and **4**B show illustrative embodiments of a first configurable current sensor configured for operation in forward boost mode and reverse buck mode, respectively.

FIGS. **4**C and **4**D show a second configurable current sensor configured for operation in forward buck mode and reverse boost mode, respectively.

FIG. **5** is a workflow of the battery charging circuit in accordance with the present disclosure.

FIG. **6** is a table illustrating different operational configurations of a buck boost circuit of the present disclosure.

FIGS. **7**A, **7**B, **7**C, **7**D illustrate different operational configurations of the buck boost circuit of the present disclosure.

FIGS. **8**A and **8**B depict, respectively, a conventional boost converter and a conventional buck converter.

DETAILED DESCRIPTION

In the following description, for purposes of explanation, numerous examples and specific details are set forth in order to provide a thorough understanding of the present disclosure. It will be evident, however, to one skilled in the art that the present disclosure as expressed in the claims may include some or all of the features in these examples alone or in combination with other features described below, and may further include modifications and equivalents of the features and concepts described herein.

FIG. **1** shows a high level block diagram of an electronic device **10** that incorporates a battery charging circuit **100** in accordance with the present disclosure. For example, the electronic device **10** may be a smartphone, personal data assistant, portable computer, computing tablet, digital imaging devices, audio devices, and so on.

The battery charging circuit **100** may be connected to a battery **14** to provide power to electronics **12** comprising the electronic device **10**. The battery **14** may comprise any suitable type of rechargeable battery cell, such as Li+ ion batteries for example. The battery **14** may further comprise a single battery cell, or more than one battery cell connected in series. Battery **14**, for example, may include 2 series-connected battery cells (a "2S stack"), but other configurations involving 3, 4, or more series-connected cells are possible. The battery voltage of such batteries typically range from 6-8.4V but can provide lower or higher voltages.

The electronic device **10** may include a connector **16** for connection to an external device **22**. The battery charging circuit **100** may include an input terminal **102** for receiving power from the external device **22** via connector **16**. A charging terminal **104** may be included to deliver power from the external device **22** to the battery **14** (e.g., an adapter to recharge the battery). The battery charging circuit **100** may include a system terminal **106** for delivering power from the external device **22** to the electronics **12**, for example, while recharging the battery **14**.

Referring for a moment to FIG. **1**A, in some embodiments, an external power supply **22***a* may be connected to the electronic device **10** via a power connector **16***a*. For example, the external power supply **22***a* may be an AC/DC adapter. The external power supply **22***a* may be used to charge battery **14** and/or provide power to electronics **12**. Likewise, referring to FIG. **1**B, in some embodiments, an electronic device **22***b* may be connected to the electronic device **10** via a general connector **16***b*. For example, the electronic device **22***b* may be laptop computer. FIG. **1**B shows connector **16***b* to be a USB connector (see also FIG. **1**C, which illustrates a micro-USB connector **16***c*), but it will be appreciated that other embodiments may employ any other suitable connector types. In some embodiments, the electronic device **10** may incorporate both kinds of connectors **16***a* and **16***b* on the device; e.g., for connecting to an external power source **22***a* and/or to an electronic device **22***b*.

Returning to FIG. **1**, the battery charging circuit **100** may provide several operating modes. As used herein, "forward mode" operation will refer to an operating mode of the battery charging circuit **100** wherein power from the external device **22** is delivered (via input terminal **102**) to the charging terminal **104** and/or to the system terminal **106**. The battery charging circuit **100** may operate in a "reverse mode" in which a battery **14** connected to the charging terminal **104** provides power to an external device **22** connected to the input terminal **102**.

FIG. **2** illustrates a high level logical block diagram showing various functional circuit blocks of the battery charging circuit **100** in accordance with the present disclosure. In some embodiments, the battery charging circuit **100** may include a buck boost circuit **212**, comprising a power train **212***a* and a current sensor block **212***b*. As will be discussed in more detail below, in some embodiments, the buck boost circuit **212** may operate as a buck converter or as a boost converter to transfer energy between the input terminal **102** and charging terminal **104** (or system terminal **106**) in either forward mode or reverse mode.

In accordance with principles of the present disclosure, the battery charging circuit **100** may accommodate different configurations of voltage level requirements between the input terminal **102** and the charging terminal **104** and/or the system terminal **106** in forward mode. For example, the voltage level at the input terminal **102** may be higher than the voltage level of a battery **14** connected to the charging terminal **104**, in which case the battery charging circuit **100** may operate in a "forward buck" mode in order to step down the voltage level to a suitable level. Conversely, if the voltage level at the input terminal **102** is lower than what is needed by the battery **14**, then the battery charging circuit **100** may operate in a "forward boost" mode in order to step up the voltage level to a suitable level.

The battery charging circuit **100** may accommodate different configurations of voltage level requirements between the charging terminal **104** and the input terminal **102** in reverse mode. For example, the voltage level of a battery **14** connected to the charging terminal **104** may be higher than is requited by an electronic device **22** connected to the input terminal **102**, in which case the battery charging circuit **100** may operate in a "reverse buck" mode to step down the battery voltage to a suitable level. Conversely, if the battery voltage is lower than is required by the electronic device **22**, then the battery charging circuit **100** may operate in a "reverse boost" mode to step up the voltage to a suitable level.

Referring again to FIG. **1**A, as an example, the external power supply **22***a* (e.g., AC/DC adapter) may be connected to the electronic device **10** to charge the battery **14**. In some cases, the external power supply **22***a* may output a voltage level that is higher than the voltage level of battery **14**, or higher than the rated operating voltage for the electronics **12**. In accordance with the present disclosure, the buck boost circuit **212** may be operated as a forward buck mode converter to reduce the voltage that is delivered from input terminal **102** to charging terminal **104** or system terminal **106**.

As another example, the external power supply **22***a* may provide a voltage level that is lower than the voltage level of the battery **14**; e.g., the power supply may be a USB supply that outputs 5V (per the USB specification) while the battery **14** is an 8.4V battery, or the external power supply may not supply sufficient voltage to operate the electronics **12**. Similarly, with reference to FIG. **1**B, the electronic device **22***b* may be a USB device that outputs only 5V, but must charge an 8.4V battery, or provide power to electronics **12** that require more than 5V to operate. Accordingly, the buck boost circuit **212** may be operated as a forward boost converter to increase the voltage level that is received at input terminal **102** to produce a suitable voltage level at charging terminal **104** or system terminal **106**.

In yet another example, the buck boost circuit **212** may operate as a buck converter in the reverse direction to transfer energy received from battery **14** connected to charging terminal **104** to a device **22** connected to input terminal **102**. Referring to FIG. **1**B, for example, the battery **14** may supply 8.4V to electronic device **22***b* which is rated to operate at lower voltage level, namely 5V per the USB specification. In general, if the battery voltage supplies a higher voltage level than is suitable for the device **22**, then reverse mode buck operation may be initiated.

Returning to FIG. **2**, the current sensor block **212***b* may provide in-circuit current sensing for various power management functions, for example, to monitor the battery current during charging, to provide overcurrent protection, to provide current limiting, and so on. Outputs from the current sensor block **212***b* may be used by the battery charging circuit **100** and by circuitry outside of the battery charging circuit to perform their power management functions. In some embodiments, the current sensor block **212***b* may comprise a sense resistor connected to the input terminal **102** and a voltage detector to detect an IR drop across the sense resistor. The detected IR drop would be representative of the input current. In other embodiments, a field effect transistor (FET) may be used. In still other embodiments, the current sensor block **212***b* may provide several current signals. As will be explained in more detail below, the current sensor block **212***b* may comprise first and second current sensor circuits (not shown in FIG. **2**) for respective forward mode operation and reverse mode operation. Each current sensor circuit may generate current signals that indicate the current flowing in the input terminal **102** and in the system terminal **106**.

An output of the buck boost circuit **212** may drive a charger **214** (e.g., a linear charger, or any other suitable circuit) that is connected to the charging terminal **104** to provide a charging current for battery **14**. System terminal **106** may take the output of the buck boost circuit **212** to power the electronics **12** directly.

A configuration detector **216** may determine whether to operate the buck boost circuit **212** as a buck converter or a boost converter, and in the forward mode or in the reverse mode. In some embodiments, the configuration detector **216** may generate suitable signals **222** that are used to configure the buck boost circuit **212** to operate accordingly.

In accordance with the present disclosure, the battery charging circuit **100** may include a current limiter **218** in order to limit the current flow through the buck boost circuit **212** according to current signals produced in the current sensor block **212***b*. Limiting the current through terminal **102** may prevent excessive current levels that can damage the external device **22** connected to terminal **102**. Adherence to industry standards may require that the battery charging circuit **100** provide current limiting capability; for example, the USB specification imposes current limits for various devices that can be connected to the battery charging circuit.

FIG. **3** illustrates an example of a buck boost circuit **212** in accordance with the present disclosure. The power train **212***a* (FIG. **2**) in the buck boost circuit **212** may comprise a first switching circuit comprising power transistor HS**1** and LS**1**, and a second switching circuit comprising power transistors HS**2** and LS**2**. FIG. **3**A illustrates the components of the power train **212***a* more clearly. In some embodiments, the power transistors HS**1**, LS**1**, HS**2**, and LS**2** may be N-type MOSFETs (e.g., NMOS devices), although in other embodi-

ADC EX1009
IPR2025-00885

ments, the power transistors may be of another suitable design. The inset in FIG. **3** shows that the power transistors HS**1**, LS**1**, HS**2**, and LS**2**, each intrinsically has a body diode that prevents current flow in the reverse direction (from source S to drain D) when the transistor is in the OFF state.

The power train **212***a* may include an inductor **302** connected between the first switching circuit HS**1**/LS**1** and the second switching circuit HS**2**/LS**2** in an H-bridge configuration. In some embodiments, the inductor **302** may be "off-chip" with respect to the battery charging circuit **100**. For example, the battery charging circuit **100** may be provided on an integrated circuit (IC) chip (not shown). The IC chip may provide pins at nodes **304***a*, **304***b* to which the inductor **302** (as an external device) can be connected. In other embodiments, the inductor **302** may be an on-chip device that is connected to nodes **304***a*, **304***b*.

In some embodiments, the current sensor block **212***b* of the buck boost circuit **212** may comprise a first configurable current sensor circuit **306***a* and second configurable current sensor circuit **306***b*. The current sensor circuit **306***a* may be connected to the input terminal **102** to sense a current flow across the input terminal. In accordance with principles of the present disclosure, the current sensor circuit **306***a* may be configured to operate in forward boost mode, in which a current signal In**1** indicates a sensed current flowing into the input terminal **102**. In accordance with the present disclosure, the current sensor circuit **306***a* may obtain (derive) a current signal Out**1**, from the sensed current signal In**1**, that represents a level of current flow out of the system terminal **106**. The current sensor circuit **306***a* may operate in reverse buck mode, in which the current signal Out**1** indicates a sensed current level flowing out of the input terminal **102** and the current signal In**1** (obtained from Out**1**) represents a level of current flowing into system terminal **106** (e.g., from battery **14**).

Similarly, the current sensor circuit **306***b* may be connected to the system terminal **106** to sense a current flow across the system terminal. In accordance with principles of the present disclosure, the current sensor circuit **306***b* may operate in a forward buck mode, in which the current signal Out**2** indicates a level of current flowing out of the system terminal **106** and the current signal In**2** (obtained from Out**2**) indicates a level of current flowing into input terminal **102**. The current sensor circuit **306***b* may operate in a reverse boost mode, in which a current signal In**2** indicates a level of current flowing into the system terminal **106** (e.g., from battery **14**). A current signal Out**2** may be obtained from current signal In**2** that represents a level of current flow out of the input terminal **102**.

In accordance with principles of the present disclosure, the current sensor circuits **306***a* and **306***b* may share power transistors used in the power train **212***a*. In an embodiment, for example, the power transistor HS**1** may be shared between the first switching circuit of power train **212***a* and the current sensor circuit **306***a*. Similarly, the power transistor HS**2** may be shared between the second switching circuit of power train **212***a* and current sensor circuit **306***b*. Power transistors require large areas of silicon to implement as compared to small signal transistor devices. Accordingly, this aspect of the present disclosure results in significant savings in silicon area, which may be important in small device applications such as mobile devices, compact cameras, and the like.

As illustrated in FIG. **3**, in some embodiments, the buck boost circuit **212** may include drivers **308***a*, **310***a*, **308***b*, and **310***b*. The drivers **308***a*, **310***a*, **308***b*, and **310***b* drive the gate terminals of respective power transistors HS**1**, LS**1**, HS**2**, and LS**2**. The drivers **308***a*, **310***a*, **308***b*, and **310***b* may drive their respective gates with a high voltage level (e.g., 5V) in order to reduce the ON resistance when their corresponding power transistors are in the ON (conducting) state. The power transistors HS**1** and HS**2** may be referred to as "high side" power transistors, and the power transistors LS**1** and LS**2** may be referred to as "low side" power transistors. Similarly, drivers **308***a* and **308***b* may be referred to as high side drivers, and drivers **310***a* and **310***b* may be referred to as low side drivers.

In some embodiments, the high side drivers **308***a*, **308***b* may reference their outputs to a floating voltage, namely the voltages respectively at nodes **304***a*, **304***b*. Accordingly, each driver **308***a*, **308***b* is powered using a corresponding bootstrap floating power supply that references respective nodes **304***a*, **304***b* in order to maintain sufficient power for the drivers **308***a*, **308***b* to drive the respective gates of HS**1**, HS**2**. For example, a first bootstrap floating power supply comprising boot diode D**1** and boot capacitor C**1** may provide a floating power supply for driver **308***a*. Likewise, a second bootstrap floating power supply comprising boot diode D**2** and boot capacitor C**2** may provide a floating power supply for driver **308***b*. In some embodiments, the boot capacitors C**1**, C**2** may be provided as off-chip components. In other embodiments, the boot capacitors C**1**, C**2** may be on-chip components.

The buck boost circuit **212** may further include a PWM module **312***a* and a PWM module **312***b*. The PWM modules **312***a*, **312***b* may produce pulse width modulated (PWM) pulses for driving respective pairs of drivers **308***a*/**310***a* and **308***b*/**310***b*. The PWM pulses are characterized by a duty cycle, which is typically expressed as the ON time of one switching cycle of a pulse as a percentage of the total period of the switching cycle.

In accordance with the present disclosure, the buck boost circuit **212** may further include a boot cap refresh circuit **314**. In accordance with principles of the present disclosure, the boot cap refresh circuit **314** may provide refresh pulse signals on signal lines **314***a*, **314***b* to charge either the boot capacitor C**1** or the boot capacitor C**2**. This aspect of the present disclosure will be discussed in more detail below.

Logic circuits **316***a*, **318***a* may coordinate the signals from PWM module **312***a* and the boot cap refresh circuit **314**. Similarly, logic circuit **316***b*, **318***b* may coordinate the signals from PWM module **312***b* and the boot cap refresh circuit **314**.

Referring to FIGS. **4**A and **4**B, an embodiment of the current sensor circuit **306***a* is shown in two configurations: a forward boost configuration (FIG. **4**A) and a reverse buck configuration (FIG. **4**B). Referring to FIG. **4**A, the current sensor circuit **306***a* may comprise a current scaling circuit **402***a* and a switching element **404***a*. The current scaling circuit **402***a* may include the high side power transistor HS**1** (from the first switching circuit of power train **212***a*), a current sensing device **412***a*, a comparator **414***a*, and an output device **416***a*. An output **406***a* of the output device **416***a* represents current flowing across input terminal **102** that is sensed by the current sensing device **412***a*. The high side power transistor HS**1** and the current sensing device **412***a* are configured as a current mirror. In some embodiments, the high side power transistor HS**1** and the current sensing device **412***a* may be sized relative to each other to provide a scaling factor of 1:Kc, where Kc is >>1. The output **406***a* is thus defined by I_{HS1}/Kc, where I_{HS1} is the current flow through the high side power transistor HS**1**.

The switching element **404***a* alternates its output **408***a* by switching between output **406***a* (via a resistor R_a) and ground (via another resistor R_a). The switching frequency may be controlled by a pulse width modulated signal produced by PWM module **312***b*.

ADC EX1009
IPR2025-00885

In accordance with principles of the present disclosure, the current sensor circuit **306***a* is dynamically reconfigurable, having a configuration for forward boost mode and another configuration for reverse buck mode. In some embodiments, the connections between elements comprising the current scaling circuit **402***a* and the switching element **404***a* may be dynamically made. For example, when forward boost mode operation is called for (e.g., via control signals from the configuration detector **216**), then elements of the current sensor circuit **306***a* may be connected as shown in FIG. **4**A. The current scaling circuit **402***a* may include wiring and electronic switches (not shown) at the terminals or nodes of devices **412***a*, **414***a*, and **416***a* that may be operated to configure the topology of the current scaling circuit as shown in FIG. **4**A. Similar wiring and electronic switches (not shown) may be provided at outputs **406***a* and **408***a* for connection respectively to In**1** and Out**1**. When reverse buck mode operation is called for, then the wiring and electronic switches (not shown) may be operated to configure the topology of the current sensor circuit **306***a* as shown in FIG. **4**B.

Referring to FIG. **4**C, the current sensor circuit **306***b* may comprise a current scaling circuit **402***b* and a switching element **404***b*. The current scaling circuit **402***b* may include the high side power transistor HS**2** (from the first switching circuit of power train **212***b*), a current sensing device **412***b*, a comparator **414***b*, and an output device **416***b*. An output **406***b* of the output device **416***b* represents current flowing across system terminal **106** that is sensed by the current sensing device **412***b*. The high side power transistor HS**2** and the current sensing device **412***b* are configured as a current mirror. In some embodiments, the high side power transistor HS**2** and the current sensing device **412***b* may be sized relative to each other to provide a scaling factor of 1:Kc, where Kc is >>1. The output **406***b* is thus defined by I_{HS2}/Kc, where I_{HS2} is the current flow through the high side power transistor HS**2**.

The switching element **404***b* alternates its output **408***b* by switching between output **406***b* (via a resistor R_a) and ground (via another resistor R_a). The switching frequency may be controlled by a pulse width modulated signal produced by PWM module **312***a*.

As with current sensor circuit **306***a*, the current sensor circuit **306***b* is dynamically reconfigurable, having a configuration for forward buck mode and another configuration for reverse boost mode. In some embodiments, connections between elements comprising the current scaling circuit **402***b* and the switching element **404***b* may be dynamically made. For example, when forward buck mode operation is called for (e.g., via control signals from the configuration detector **216**), then elements of the current sensor circuit **306***b* may be connected as shown in FIG. **4**C. The current scaling circuit **402***b* may include wiring and electronic switches (not shown) at the terminals of devices **412***b*, **414***b*, and **416***b* that may be operated to configure the topology of the current scaling circuit as shown in FIG. **4**C. Likewise, wiring and electronic switches (not shown) may be provided at outputs **406***b* and **408***b* for connection respectively to In**2** and Out**2**. When reverse boost mode operation is called for, then the wiring and electronic switches (not shown) may be operated to configure the topology of the current sensor circuit **306***b* as shown in FIG. **4**D.

Operation of the battery charging circuit **100** may be explained using the work flow shown in FIG. **5**. At block **502**, the battery charging circuit **100** may detect that external device **22** (FIG. **1**) has been attached to the electronic device **10**. Any technique may be used to detect device attachment. The USB specification, for example, specifies how USB ports can detect the insertion of a USB device.

At block **504**, the configuration detector **216** may determine a suitable configuration of operation of the battery charging circuit **100**, either buck or boost mode and in the forward or reverse direction. For example, in some embodiments, the configuration detector **216** may use the voltage levels at the input terminal **102** and the charging terminal **104** to determine a proper configuration. In the case of a micro USB port, the configuration detector **216** may use the ID pin to determine the proper configuration, and so on.

If at block **506**, the voltage configuration determined at block **504** indicates forward boost mode operation, then at block **508** the battery charging circuit **100** may configure the buck boost circuit **212** for forward boost mode operation. In some embodiments, for example, the configuration detector **216** may assert various control signals (not shown) that can inform the buck boost circuit **212** to configure for forward boost mode. As an example, suppose an external device **22** is connected to the input terminal **102** and the voltage level V_1 at input terminal **102** is lower than the voltage level V_2 at charging terminal **104**. It may therefore be necessary to step up the voltage level V_1 to a higher voltage level in order to properly charge the battery **14**. If the external device is a USB adapter (or a USB host device) and the battery **14** is a 3S battery pack, then the 5V output of the USB adapter (or device) will be insufficient to fully charge the 3S battery, which may output 12V for instance. Accordingly, the buck boost circuit **212** may be configured for forward boost mode operation to step up the 5V to a higher voltage level. In some embodiments, the system terminal **106** may be electrically connected to charging terminal **104**, so a voltage level V_2 may appear on system terminal **106** as well.

If at block **510**, the voltage configuration determined at block **504** indicates reverse boost mode operation, then at block **512** the battery charging circuit **100** may configure the buck boost circuit **212** for reverse boost mode operation. In some embodiments, this operating mode may be initiated by a "reverse boost mode" signal from an external device connected to the battery charging circuit **100**. For example, referring for a moment to FIG. **1**C, a device **22***c* using a micro-USB device may signal the battery charging circuit **100** using its ID pin to operate in reverse boost mode. It will be appreciated that, in other embodiments, the reverse boost mode signal may be generated by the electronics **12**. In response, the buck boost circuit **212** may be configured for reverse boost mode operation to step up the battery voltage to a higher voltage level that is suitable for the external device **22***c*.

If at block **514**, the voltage configuration determined at block **504** indicates reverse buck mode operation, then at block **516** the battery charging circuit **100** may configure the buck boost circuit **212** for reverse buck mode operation. In some embodiments, this operating mode may be initiated by a "reverse buck mode" signal from an external device connected to the battery charging circuit **100**. For example, referring for a moment to FIG. **1**C, a device **22***c* using a micro-USB device may signal the battery charging circuit **100** using its ID pin to operate in reverse buck mode. It will be appreciated that, in other embodiments, the reverse buck mode signal may be generated by the electronics **12**. In response, the buck boost circuit **212** may be configured for reverse buck mode operation to step down the battery voltage to a lower voltage level that is suitable for the external device **22***c*.

If at block **518**, the configuration determined at block **504** indicates forward buck mode operation, then at block **520** the battery charging circuit **100** may configure the buck boost circuit **212** for forward buck mode operation. For example, suppose a power adapter **22***a* is connected to input terminal **102** and a battery **14** is connected to charging terminal **104**. If

ADC EX1009
IPR2025-00885

the voltage level V_1 at input terminal **102** is higher than the voltage level V_2 at charging terminal **104**, then it may be necessary to step down the voltage level V_1 to a lower voltage level in order to properly charge the battery **14**. Accordingly, the buck boost circuit **212** may be configured for forward buck mode operation. In some embodiments, the system terminal **106** may be electrically connected to charging terminal **104**, so a voltage level V_2 may appear on system terminal **106** as well.

Referring to FIG. **6**, operation of the buck boost circuit **212** in accordance with the present disclosure will be described using the table **600** shown in the figure. When the battery charging circuit **100** determines which mode of operation is appropriate, then the battery charging circuit may activate the PWM modules **312***a*, **312***b*, and boot cap refresh circuit **314** according to the table **600**.

Thus, referring to table **600**, if forward boost mode operation is appropriate, the PWM module **312***b* may be controlled to generate pulses SW having a duty cycle of $duty_{f1}$. The PWM module **312***a* may be controlled to assert HI on its output. The boot cap refresh circuit may be controlled to assert LO at signal lines **314***a*, **314***b*. In response, the buck boost circuit **212** will operate as shown in FIG. **7**A. Logic circuit **318***a* will output LO and thus maintain low side power transistor LS**1** in a constant OFF (non-conducting) state. Logic circuit **316***a* will output HI and thus maintain high side power transistor HS**1** in a constant ON (conducting) state. High side power transistor HS**2** and low side power transistor LS**2** switch according to pulses SW produced by the PWM module **312***b* at a duty cycle of $duty_{f1}$. More specifically, when HS**2** is ON then LS**2** is OFF, and vice versa. As indicated by the dashed line in FIG. **7**A, power is delivered from the input terminal **102** to the system terminal **106** (and hence to the charging terminal **104** via the charger **214**) in forward boost mode.

Referring to FIG. **8**A, it will be appreciated that the buck boost circuit **212** configured as shown in FIG. **7**A operates as a boost converter. One of ordinary skill in the art will appreciate that LS**2** constitutes the switching element (SW) of the basic boost converter shown in FIG. **8**A. The inductor **302** and the output capacitor C_o respectively correspond to the inductive (L) and capacitive (C) elements. The high side power transistor HS**2** functions as the diode (D) element because it behaves as a forward conducting diode in the ON state and acts as a blocking diode in the OFF state by virtue of the transistor's body diode (inset, FIG. **7**A).

Returning to table **600** in FIG. **6**, if reverse buck mode operation is appropriate, the PWM module **312***b* may be controlled to generate pulses SW having a duty cycle of $duty_{f2}$. The PWM module **312***a* may be controlled to assert HI on its output. The boot cap refresh circuit may be controlled to assert LO at signal lines **314***a*, **314***b*. In response, the buck boost circuit **212** will operate as shown in FIG. **7**B. Logic circuit **318***a* will output LO and thus maintain low side power transistor LS**1** in a constant OFF state. Logic circuit **316***a* will output HI and thus maintain high side power transistor HS**1** in a constant ON state. High side power transistor HS**2** and low side power transistor LS**2** switch according to pulses SW produced by the PWM module **312***b* at a duty cycle of $duty_{f2}$. More specifically, when HS**2** is ON then LS**2** is OFF, and vice versa. As indicated by the dashed line in FIG. **7**B, power is delivered from the charging terminal **104** to the input terminal **102** in reverse buck mode.

Referring to FIG. **8**B, it will be appreciated that the buck boost circuit **212** configured as shown in FIG. **7**B operates as a buck converter in the direction from charging terminal **104** to input terminal **102**. One of ordinary skill in the art will appreciate that HS**2** constitutes the switching element (SW) of the basic buck converter shown in FIG. **8**B. The inductor **302** and the input capacitor C_1 respectively correspond to the inductive (L) and capacitive (C) elements. The low side power transistor LS**2** functions as the diode (D) element because it behaves as a forward conducting diode in the ON state and acts as a blocking diode in the OFF state by virtue of the transistor's body diode (inset, FIG. **7**B).

Returning to table **600**, if forward buck mode operation is appropriate, the PWM module **312***a* may be controlled to generate pulses SW having a duty cycle of $duty_{f3}$. The PWM module **312***b* may be controlled to assert HI on its output. The boot cap refresh circuit may be controlled to assert a LO signal (e.g., "0") at signal lines **314***a*, **314***b*. In response, the buck boost circuit **212** will operate as shown in FIG. **7**C. Logic circuit **318***b* will output LO and thus maintain low side power transistor LS**2** in a constant OFF state. Logic circuit **316***b* will output HI and thus maintain high side power transistor HS**2** in a constant ON state. High side power transistor HS**1** and low side power transistor LS**1** switch according to pulses SW produced by the PWM module **312***a* at a duty cycle of $duty_{f3}$. More specifically, when HS**1** is ON then LS**1** is OFF, and vice versa. As indicated by the dashed line in FIG. **7**C, power is delivered from the input terminal **102** to the system terminal **106** (and hence to the charging terminal **104** via the charger **214**) in forward buck mode.

Referring again to FIG. **8**B, it will be appreciated that the buck boost circuit **212** configured as shown in FIG. **7**C operates as a buck converter. One of ordinary skill in the art will appreciate that HS**1** constitutes the switching element (SW) of the basic buck converter shown in FIG. **8**B. The inductor **302** and the output capacitor C_o correspond to the inductive (L) and capacitive (C) elements, respectively. The low side power transistor LS**1** functions as the diode (D) element because it behaves as a forward conducting diode in the ON state and acts as a blocking diode in the OFF state by virtue of the transistor's body diode (inset, FIG. **7**C).

Returning to table **600** in FIG. **6**, if reverse boost mode operation is appropriate, the PWM module **312***a* may be controlled to generate pulses SW having a duty cycle of $duty_{f4}$. The PWM module **312***b* may be controlled to assert HI on its output. The boot cap refresh circuit may be controlled to assert LO at signal lines **314***a*, **314***b*. In response, the buck boost circuit **212** will operate as shown in FIG. **7**D. Logic circuit **318***b* will output LO and thus maintain low side power transistor LS**2** in a constant OFF state. Logic circuit **316***b* will output HI and thus maintain high side power transistor HS**2** in a constant ON state. High side power transistor HS**1** and low side power transistor LS**1** switch according to pulses SW produced by the PWM module **312***a* at a duty cycle of $duty_{f4}$. More specifically, when HS**1** is ON then LS**1** is OFF, and vice versa. As indicated by the dashed line in FIG. **7**D, power is delivered from the charging terminal **104** via the charger **214** to the input terminal **102** in reverse boost mode.

Referring again to FIG. **8**A, it will be appreciated that the buck boost circuit **212** configured as shown in FIG. **7**D operates as a boost converter. One of ordinary skill in the art will appreciate that LS**1** constitutes the switching element (SW) of the basic boost converter shown in FIG. **8**A. The inductor **302** and the input capacitor C_1 respectively correspond to the inductive (L) and capacitive (C) elements. The high side power transistor HS**1** functions as the diode (D) element because it behaves as a forward conducting diode in the ON state and acts as a blocking diode in the OFF state by virtue of the transistor's body diode (inset, FIG. **7**D).

Operation of current sensor **306***a* configured for forward boost mode operation will be explained with reference to

ADC EX1009
IPR2025-00885

FIGS. **4**A and **7**A. In this configuration, current sensor **306***a* senses current in the input terminal **102** as an input current flowing into the battery charging circuit **100**, and obtains or derives the current flowing in system terminal **106** as output current flowing out of the battery charging circuit. During forward boost mode, the current sensor **306***a* is "active" in that the high side transistor HS**1** is always ON, while HS**2** and LS**2** are switching. Current flows in the directions indicated by I_1, I_2, and I_3 in FIG. **4**A. The following relations hold:

$$I_1 = I_2$$

$$I_3 = \frac{I_1}{Kc} = \frac{I_2}{Kc}$$

$$V_1 = \frac{R_a I_2}{Kc}$$

where

I_1 is the current flowing from terminal **102** to HS**1**,

I_2 is the inductor current,

I_3 represents a portion of the current flowing through HS**1**,

V_0 is an output voltage,

V_1 represent the voltage across resistor R_a, and

Kc is the device scaling factor described above.

During HS**2** OFF times, LS**2** is ON and current flow through the buck boost circuit **212** takes the following path: input terminal **102**, high side power transistor HS**1**, inductor **302**, low side power transistor LS**2**, and ground. Therefore, during the HS**2** OFF times, the current I_3 represents the input current, and the voltage V_1 across resistor R_a at output **406***a* represents a sense signal indicative of the input current. Accordingly, voltage V_1 at In**1** during HS**2** OFF times is indicative of the sensed input current of the battery charging circuit **100**.

During the HS**2** ON times, LS**2** is OFF and current flow through the buck boost circuit **212** takes the following path: input terminal **102**, HS**1**, inductor **302**, HS**2**, system terminal **106**. Therefore, during HS**2** ON times, the current I_3 represents the output current. In accordance with principles of the present disclosure, the closing of switching element **404***a* may be synchronized (time multiplexed) with the ON times of HS**2** to extract a signal from output **406***a* that represents a signal indicative of the output current and provide the extracted signal at output **408***a*. Thus, the voltage V_1 at Out**1** during HS**2** ON times represents a signal indicative of the output current of the battery charging circuit **100**.

Referring to FIGS. **4**B and **7**B, operation of current sensor **306***a* configured for reverse buck mode operation will be explained. In this configuration, current sensor **306***a* senses current in the input terminal **102** as output current flowing out of the battery charging circuit **100** and obtains or derives the current flowing in system terminal **106** as input current (from battery **14** via charging terminal **104**) flowing into the battery charging circuit. During reverse buck mode, the current sensor **306***a* is "active" in that the high side transistor HS**1** is always ON, while HS**2** and LS**2** are switching. Current flows in the directions indicated by I_1, I_2, and I_3 in FIG. **4**B. The following relations hold:

$$I_1 = \frac{I_2(Kc-1)}{Kc} \cong I_2$$

$$I_3 = \frac{I_1}{Kc} \cong \frac{I_2}{Kc}$$

-continued

$$V_1 \cong \frac{R_a I_2}{Kc}$$

where

I_1 is current flowing from HS**1** to terminal **102**,

I_2 is the inductor current,

I_3 represents a portion of the current flowing through HS**1**,

V_0 is an output voltage,

V_1 represent the voltage across resistor R_a, and

Kc is the device scaling factor described above.

During the HS**2** OFF times, LS**2** is ON and current flow through the buck boost circuit **212** takes the following path: ground, low side power transistor LS**2**, inductor **302**, high side power transistor HS**1**, and input terminal **102**. Therefore, during HS**2** OFF times, the current I_3 represents the output current, and the voltage V_1 across resistor R_a at output **406***a* represents a sense signal indicative of the output current of the battery charging circuit **100**.

During HS**2** ON times, LS**2** is OFF and current flow through the buck boost circuit **212** takes the following path: system terminal **106**, HS**2**, inductor **302**, HS**1**, and input terminal **102**. Therefore, during the HS**2** ON times, the current I_3 represents the input current. In accordance with principles of the present disclosure, the closing of switching element **404***a* may be synchronized (time multiplexed) with the ON times of HS**2** so that output **408***a* can be extracted from output **406***a* that represents a signal indicative of the input current and provide the extracted signal at output **408***a*. Thus, the voltage V_1 at In**1** during HS**2** ON times represents a signal indicative of the input current of the battery charging circuit **100** from battery **14**.

Referring to FIGS. **4**C and **7**C, operation of current sensor **306***b* configured for forward buck mode operation will be explained. In this configuration, current sensor **306***b* senses current in the system terminal **106** as output current flowing out of the battery charging circuit **100** and obtains or derives the current flowing in input terminal **102** as input current flowing into the battery charging circuit. During forward buck mode, the current sensor **306***b* is "active" in that the high side transistor HS**2** is always ON, while HS**1** and LS**1** are switching. Current flows in the directions indicated by I_1, I_2, and I_3 in FIG. **4**C. The following relations hold:

$$I_1 = \frac{I_2(Kc-1)}{Kc} \cong I_2$$

$$I_3 = \frac{I_1}{Kc} \cong \frac{I_2}{Kc}$$

$$V_1 \cong \frac{R_a I_2}{Kc}$$

where

I_1 is the current flowing from HS**2** to terminal **106**,

I_2 is the inductor current,

I_3 represents a portion of the current flowing through HS**2**,

V_0 is an output voltage,

V_1 represent the voltage across resistor R_a, and

Kc is the device scaling factor described above.

During HS**1** OFF times, LS**1** is ON and current flow through the buck boost circuit **212** takes the following path: ground, LS**1**, inductor **302**, HS**2**, and system terminal **106**. Therefore, during the HS**1** OFF times, the current I_3 represents the output current, and the voltage V_1 across resistor R_a at output **406***b* represents a sense signal indicative of the

output current. Accordingly, voltage V_1 at Out**2** during HS**1** OFF times is indicative of the output current of the battery charging circuit **100**.

During the HS**1** ON times, LS**1** is OFF and current flow through the buck boost circuit **212** takes the following path: input terminal **102**, HS**1**, inductor **302**, HS**2**, and system terminal **106**. Therefore, during HS**1** ON times, the current I_3 represents the input current. In accordance with the present disclosure, the closing of switching element **404***b* may be synchronized (time multiplexed) with the ON times of HS**1** to extract a signal from output **406***b* that represents a signal indicative of the input current and provide the extracted signal at output **408***b*. Thus, the voltage V_1 at In**2** during HS**1** ON times represents a signal indicative of the input current of the battery charging circuit **100**.

Referring to FIGS. **4**D and **7**D, operation of current sensor **306***b* configured for reverse boost mode operation will be explained. In this configuration, current sensor **306***b* senses current in the system terminal **106** as input current (from battery **14**) flowing into the battery charging circuit **100** and obtains or derives the current flowing in input terminal **102** as output current flowing out of the battery charging circuit. During reverse boost mode, the current sensor **306***b* is "active" in that the high side transistor HS**2** is always ON, while HS**1** and LS**1** are switching. Current flows in the directions indicated by I_1, I_2, and I_3 in FIG. **4**D. The following relations hold:

$$I_1 = I_2$$

$$I_3 = \frac{I_1}{Kc} = \frac{I_2}{Kc}$$

$$V_1 = \frac{R_a I_2}{Kc}$$

where

I_1 is the current flowing from system terminal **106** to HS**2**,

I_2 is the inductor current,

I_3 represents a portion of the current flowing through HS**2**,

V_0 is an output voltage,

V_1 represent the voltage across resistor R_a, and

Kc is the device scaling factor described above.

During HS**1** OFF times, LS**1** is ON and current flow through the buck boost circuit **212** takes the following path: system terminal **106**, HS**2**, inductor **302**, LS**1**, and ground. Therefore, during the HS**1** OFF times, the current I_3 represents the input current, and the voltage V_1 across resistor R_a at output **406***b* represents a sense signal indicative of the input current. Accordingly, voltage V_1 at In**2** during HS**1** OFF times is indicative of the input current of the battery charging circuit **100**.

During the HS**1** ON times, LS**1** is OFF and current flow through the buck boost circuit **212** takes the following path: system terminal **106**, HS**2**, inductor **302**, HS**1**, input terminal **102**. Therefore, during HS**1** ON times, the current I_3 represents the output current. In accordance with the present disclosure, the closing of switching element **404***b* may be synchronized (time multiplexed) with the ON times of HS**1** to extract a signal from output **406***b* that represents a sensed signal indicative of the output current and provide the extracted signal at output **408***b*. Thus, the voltage V_1 at Out**2** during HS**1** ON times represents a sensed signal indicative of the output current of the battery charging circuit **100**.

Referring back to FIG. **3**, operation of the boot cap refresh circuit **314** will now be discussed. As explained above, the boot capacitors C**1**, C**2** provide a floating reference for respective high side drivers **308***a*, **308***b*. Typically, the boot capacitors C**1** and C**2** are refreshed during the ON times of respective low side power transistors LS**1**, LS**2**. For example, in forward buck mode operation (e.g., FIG. **7**C), when LS**1** is ON, LS**1** provides a path to ground so that boot capacitor C**1** can be charged (refreshed) to a level sufficient to operate high side driver **308***a*.

However, under some situations, there may be insufficient time to adequately refresh the boot capacitor C**1** or C**2**. For example, if the ON time for the low side power transistor (LS**1** or LS**2**) is too short (e.g., very high duty cycle), then the discharge rate of the boot capacitor may be greater than the charge rate. A 100% duty cycle means the low side power transistor may not turn on at all. If the battery charging circuit operates in a pulse skipping mode, the period of time between pulses where both the high side and the low side power transistors are turned OFF may be too long.

Referring to the forward buck mode configuration shown in FIG. **7**C, when the boot capacitor C**1** is charging (refresh) during an ON time of the low side power transistor LS**1**, a current disturbance may arise in the inductor during the refresh. At the end of the refresh, as the low side power transistor LS**1** starts to open (non-conductive state), this disturbance may generate a boost back voltage at the input terminal **102**. Likewise, with respect to the forward boost mode configuration shown in FIG. **7**A, when the boot capacitor C**2** is charging during an ON time of the low side power transistor LS**2**, a similar current disturbance may arise in the inductor. At the end of the refresh, when the low side power transistor LS**2** starts to open, this disturbance may generate an extra boosted voltage that appears the system terminal **106**. In addition, the foregoing described current disturbances can create unpredictable inductor current conditions at system initialization in applications where a refresh operation to initialize the boot capacitor may be needed as part of the system initialization.

In accordance with principles of the present disclosure, the boot cap refresh circuit **314** may generate refresh pulses on signal lines **314***a* and **314***b*. In some embodiments, the refresh pulses may be event-driven; for example, when the charge level on a boot capacitor C**1** or C**2** falls below a threshold level. The charge level in the boot cap can be acquired by measurement or by estimation in the chip.

Referring to FIG. **3**, the refresh pulses will force the high side power transistors HS**1**, HS**2** to the OFF state by operation of the inverting input of respective AND gates **316***a*, **316***b*. Turning OFF the high side power transistors HS**1**, HS**2** may prevent current flow into respective terminals **102**, **106** during a refresh period, and thus avoid, or at least reduce, the boosted voltage disturbances described above.

At the same time, the refresh pulses will force the low side power transistors LS**1**, LS**2** to the ON state, providing a path to ground so that respective boot capacitors C**1**, C**2** can charge (refresh). The pulse width of the refresh pulses may be based on the time constant of the boot capacitance (e.g., C**1**) and the boot diode D**1** ON resistance.

The above description illustrates various embodiments of the present invention along with examples of how aspects of the particular embodiments may be implemented. The above examples should not be deemed to be the only embodiments, and are presented to illustrate the flexibility and advantages of the particular embodiments as defined by the following claims. Based on the above disclosure and the following claims, other arrangements, embodiments, implementations and equivalents may be employed without departing from the scope of the present disclosure as defined by the claims.

What is claimed is:

1. A battery charging circuit comprising:

a first terminal;

a second terminal configured to provide energy to a battery;

a power train having a connection to the first terminal and a connection to the second terminal, the power train having a forward boost mode operation and a forward buck mode operation to deliver energy received at the first terminal to the second terminal, the power train having a reverse boost mode operation and reverse buck mode operation to deliver energy received at the second terminal to the first terminal;

a current sensor block connected to the first terminal and the second terminal, the current sensor block having a first operating mode to sense a current flow in the first terminal and produce a signal indicative of a current flow in the second terminal based on a sensed current flow in the first terminal, the current sensor block further having a second operating mode to sense the current flow in the second terminal and produce a signal indicative of the current flow in the first terminal based on a sensed current flow in the second terminal; and

a first pulse width modulator (PWM) circuit and a separate second PWM circuit, both connected to the power train, wherein when the first PWM operates in switching mode the second PWM operates in non-switching mode and when the second PWM operates in switching mode the first PWM operates in non-switching mode.

2. The battery charging circuit of claim 1 wherein energy received at the first terminal is from a power source connected to the first terminal and wherein the energy is delivered to a battery connected to the second terminal.

3. The battery charging circuit of claim 2 further comprising a third terminal configured to connect to an electronic circuit, the power train configured to deliver energy received at the first terminal to the third terminal.

4. The battery charging circuit of claim 1 wherein energy received at the second terminal is from a battery and wherein the energy is delivered to a load connected to the first terminal.

5. The battery charging circuit of claim 1 wherein the first PWM circuit operates in switching mode and the second PWM circuit operates in non-switching mode when the power train operates in forward boost mode or in reverse buck mode and wherein the first PWM circuit operates in non-switching mode and the second PWM circuit operates in switching mode when the power train operates in forward buck mode or in reverse boost mode.

6. The battery charging circuit of claim 1 wherein the power train comprises a first switching circuit connected to the first PWM circuit and a second switching circuit connected to the second PWM circuit.

7. The battery charging circuit of claim 1 wherein the current sensor block comprises a first current sensor connected only to the first terminal and having a first output indicative of the sensed current flow in the first terminal and a second output indicative of the current flow in the second terminal.

8. The battery charging circuit of claim 7 wherein the power train operates at a first duty cycle, wherein the second output of the first current sensor is generated from the first output of the first current sensor during ON times of the first duty cycle.

9. The battery charging circuit of claim 7 further comprising a second current sensor connected only to the second terminal and having a first output indicative of the sensed current flow in the second terminal and a second output indicative of the current flow in the first terminal.

10. The battery charging circuit of claim 1 wherein the current sensor block comprises a first current sensor connected only to the first terminal and a second current sensor connected only to the second terminal, wherein the first current sensor is active and the second current sensor is not active when the power train operates in the forward boost mode or the reverse buck mode, wherein the first current sensor is not active and the second current sensor is active when the power train operates in the forward buck mode or the reverse boost mode.

11. The battery charging circuit of claim 1 wherein the current sensor block comprises a first current sensor connected to the first terminal and having a first master transistor, and a second current sensor connected to the second terminal and having a second master transistor,

wherein the power train comprises a first switching circuit and a second switching circuit,

wherein a first transistor of the first switching circuit and the first master transistor are the same transistor,

wherein a first transistor of the second switching circuit and the second master transistor are the same transistor.

12. The battery charging circuit of claim 1 wherein the power train comprises:

a pair of high side transistors and a pair of low side transistors for connection to an inductor in an H-bridge circuit;

a high side driver connected to drive one of the high side transistors;

a capacitor connected to provide a floating power supply to the high side driver that is referenced to the inductor;

refresh circuitry to generate a refresh pulse that turns OFF the high side transistors to prevent boosting the voltage at the first terminal or the second terminal and turns ON the low side transistors to charge the capacitor thereby refreshing the capacitor.

13. The battery charging circuit of claim 12 wherein the refresh circuitry generates a refresh pulse when the charge voltage on the capacitor falls below a predetermined level.

14. An electronic device comprising a battery charging circuit according to claim 1 and a load connected to the battery charging circuit.

15. A battery charging circuit comprising:

a buck boost circuit having a first terminal and a second terminal, the second terminal configured to connect to a battery,

the buck boost circuit configured to operate in a forward buck mode or a forward boost mode to provide power provided at the first terminal to the second terminal, the buck boost circuit further configured to operate in a reverse buck mode or a reverse boost mode to provide power received from a battery connected to the second terminal to the first terminal,

the buck boost circuit further having a current sensor block,

the current sensor block configured to operate in a first mode to sense a current flow in the first terminal and produce a signal representative of a current flow in the second terminal based on the current flow sensed in the first terminal, the current sensor block further configured to operate in a second mode to sense the current flow in the second terminal and produce a signal representative of the current flow in the first terminal based on the current flow sensed in the second terminal,

wherein the buck boost circuit comprises:

a pair of high side transistors and a pair of low side transistors for connection to an inductor in an H-bridge circuit;

a high side driver connected to drive one of the high side transistors;

a capacitor connected to provide a floating power supply to the high side driver that is referenced to the inductor; and

refresh circuitry to generate a refresh pulse that turns OFF the high side transistors to prevent boosting the voltage at the first terminal or the second terminal and turns ON the low side transistors to charge the capacitor thereby refreshing the capacitor.

16. The battery charging circuit of claim **15** wherein the buck boost circuit further has a third terminal configured to connect to an electronic circuit, the buck boost circuit configured to deliver energy received at the first terminal to the third terminal.

17. A method in a battery charging circuit comprising:

generating a charge output configured to charge a battery by operating a buck boost circuit in a forward buck mode or a forward boost mode to provide power provided at a first terminal to a second terminal configured to connect to the battery;

operating the buck boost circuit in a reverse buck mode or a reverse boost mode to provide power received from the battery at the second terminal to the first terminal;

generating a signal representative of current flow in the second terminal using a current flow sensed in the first terminal when operating the buck boost circuit in the forward boost mode or the reverse buck mode;

generating a signal representative of current flow in the first terminal using a current flow sensed in the second terminal when operating the buck boost circuit in the forward buck mode or the reverse boost mode; and

operating the buck boost circuit in the forward buck mode or the forward boost mode to provide power provided at the first terminal to a third terminal configured to connect to an electronic device other than a battery,

wherein the buck boost circuit comprises

a pair of high side transistors and a pair of low side transistors for connection to an inductor in an H-bridge circuit;

a high side driver connected to drive one of the high side transistors;

a capacitor connected to provide a floating power supply to the high side driver that is referenced to the inductor;

refresh circuitry to generate a refresh pulse that turns OFF the high side transistors to prevent boosting the voltage at the first terminal or the second terminal and turns ON the low side transistors to charge the capacitor thereby refreshing the capacitor.

18. A battery charging circuit comprising:

a first terminal;

a second terminal configured to provide energy to a battery;

a power train having a connection to the first terminal and a connection to the second terminal, the power train having a forward boost mode operation and a forward buck mode operation to deliver energy received at the first terminal to the second terminal, the power train having a reverse boost mode operation and reverse buck mode operation to deliver energy received at the second terminal to the first terminal; and

a current sensor block connected to the first terminal and the second terminal, the current sensor block having a first operating mode to sense a current flow in the first terminal and produce a signal indicative of a current flow in the second terminal based on a sensed current flow in the first terminal, the current sensor block further having a second operating mode to sense the current flow in the second terminal and produce a signal indicative of the current flow in the first terminal based on a sensed current flow in the second terminal,

wherein the current sensor block comprises a first current sensor connected to the first terminal and having a first master transistor, and a second current sensor connected to the second terminal and having a second master transistor,

wherein the power train comprises a first switching circuit and a second switching circuit,

wherein a first transistor of the first switching circuit and the first master transistor are the same transistor,

wherein a first transistor of the second switching circuit and the second master transistor are the same transistor.

19. The battery charging circuit of claim **18** wherein the power train comprises:

a pair of high side transistors and a pair of low side transistors for connection to an inductor in an H-bridge circuit;

a high side driver connected to drive one of the high side transistors;

a capacitor connected to provide a floating power supply to the high side driver that is referenced to the inductor;

refresh circuitry to generate a refresh pulse that turns OFF the high side transistors to prevent boosting the voltage at the first terminal or the second terminal and turns ON the low side transistors to charge the capacitor thereby refreshing the capacitor.

* * * * *