US 20130285596A1

(19) United States

(12) Patent Application Publication

(10) Pub. No.: US 2013/0285596 A1

(43) Pub. Date: Oct. 31, 2013

Zhou et al.

(54) BOOSTING INPUT POWER

(76) Inventors: **Pei-Qi Zhou**, Shanghai (CN); **Wei Yan**, Shanghai (CN)

(21) Appl. No.: **13/459,663**

(22) Filed: **Apr. 30, 2012**

Publication Classification

(51) **Int. Cl.**
H02J 7/00 (2006.01)

(52) **U.S. Cl.**
USPC **320/107**

(57) **ABSTRACT**

In one implementation, an input power management component receives an input power, and determines whether an input current and voltage satisfies predetermined thresholds. A boost component generates a boost output voltage using the input voltage if the input current satisfies a predetermined current threshold, and a step-down charging component converts the boost output voltage to a voltage for charging a battery and system power management.

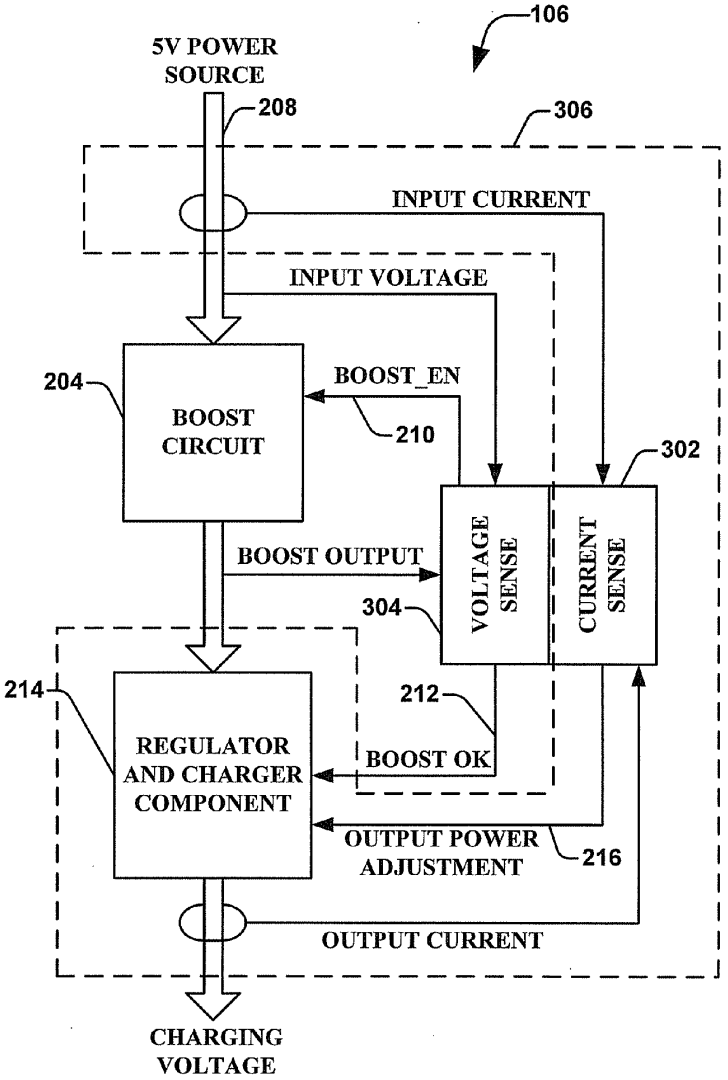

ADC EX1016
IPR2025-00885

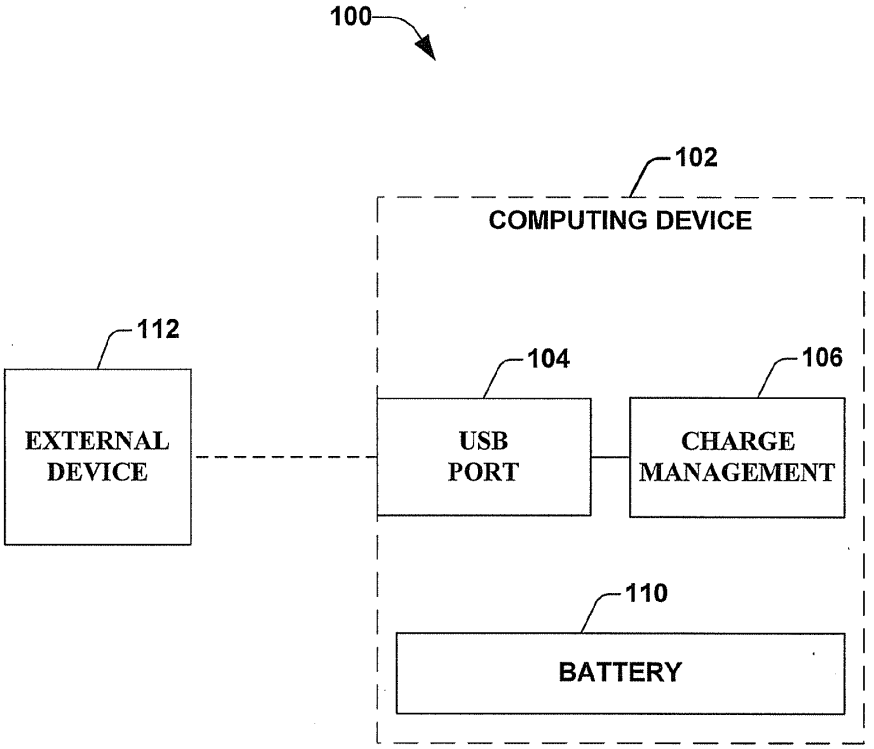

FIG. 1

ADC EX1016
IPR2025-00885

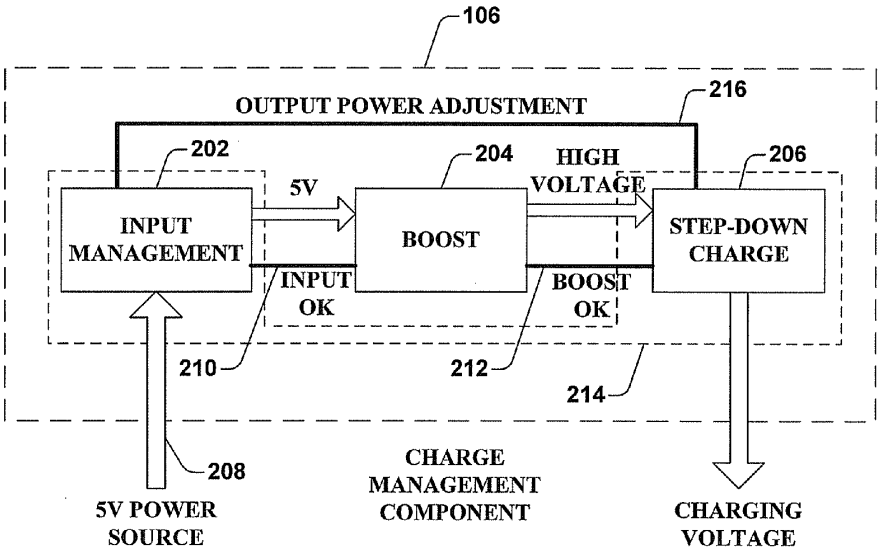
106
OUTPUT POWER ADJUSTMENT
216
202
204
206
5V
HIGH VOLTAGE
INPUT MANAGEMENT
BOOST
STEP-DOWN CHARGE
INPUT OK
BOOST OK
210
212
214
208
5V POWER SOURCE
CHARGE MANAGEMENT COMPONENT
CHARGING VOLTAGE

FIG. 2

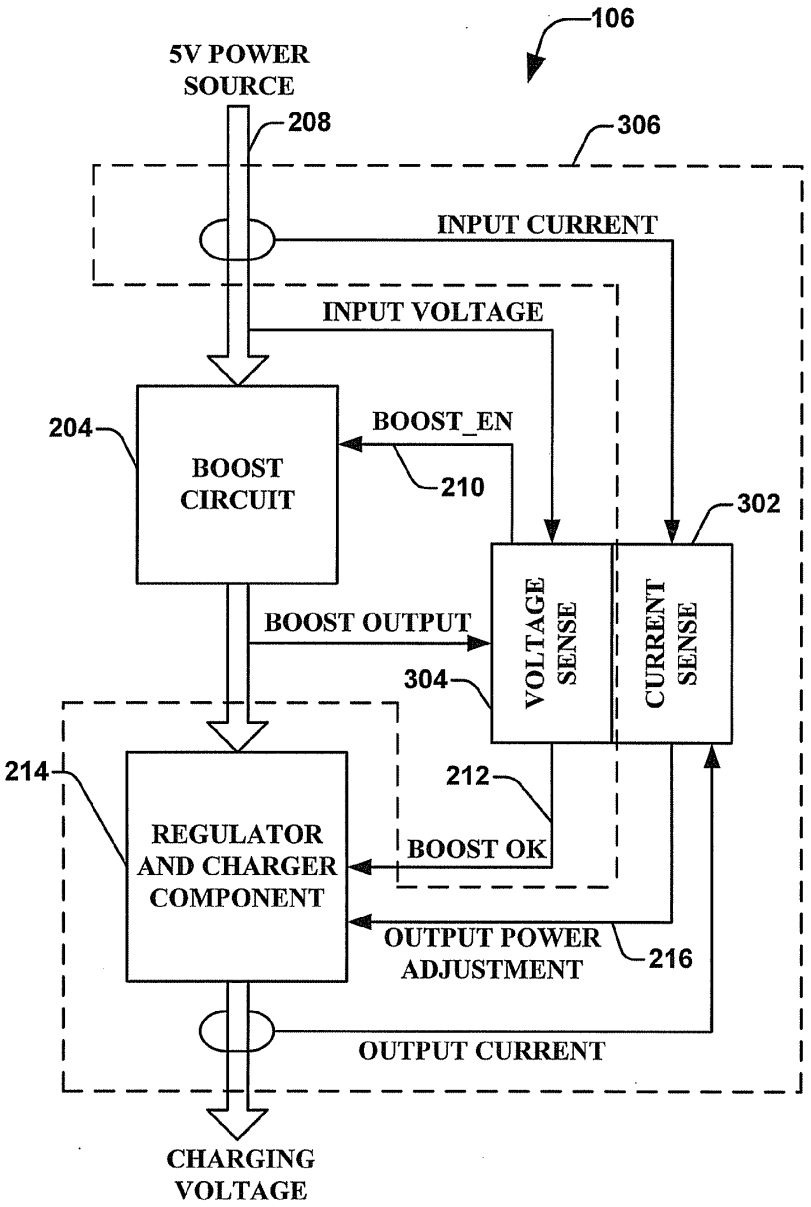

FIG. 3

ADC EX1016
IPR2025-00885

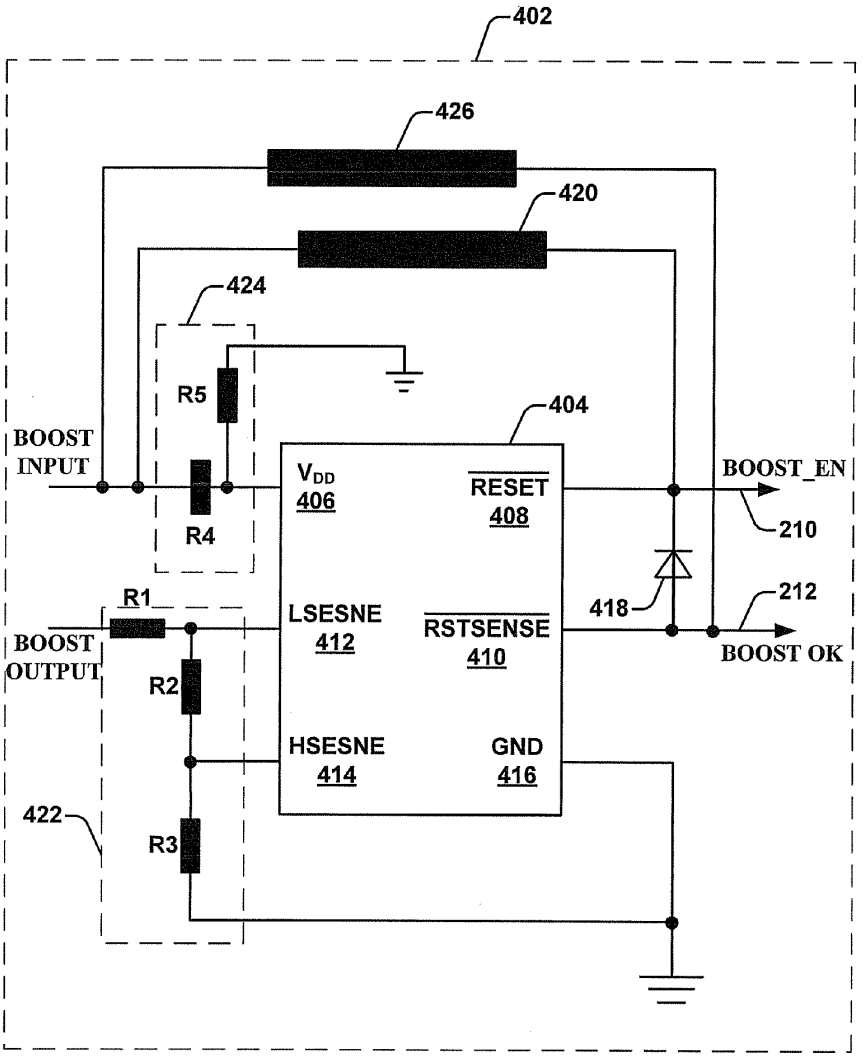
402
426
420
424
R5
404
BOOST
INPUT
V_{DD}
406
RESET
408
BOOST_EN
210
R4
R1
LSESNE
412
RSTSENSE
410
418
212
BOOST
OUTPUT
BOOST OK
R2
HSESNE
414
GND
416
422
R3

FIG. 4

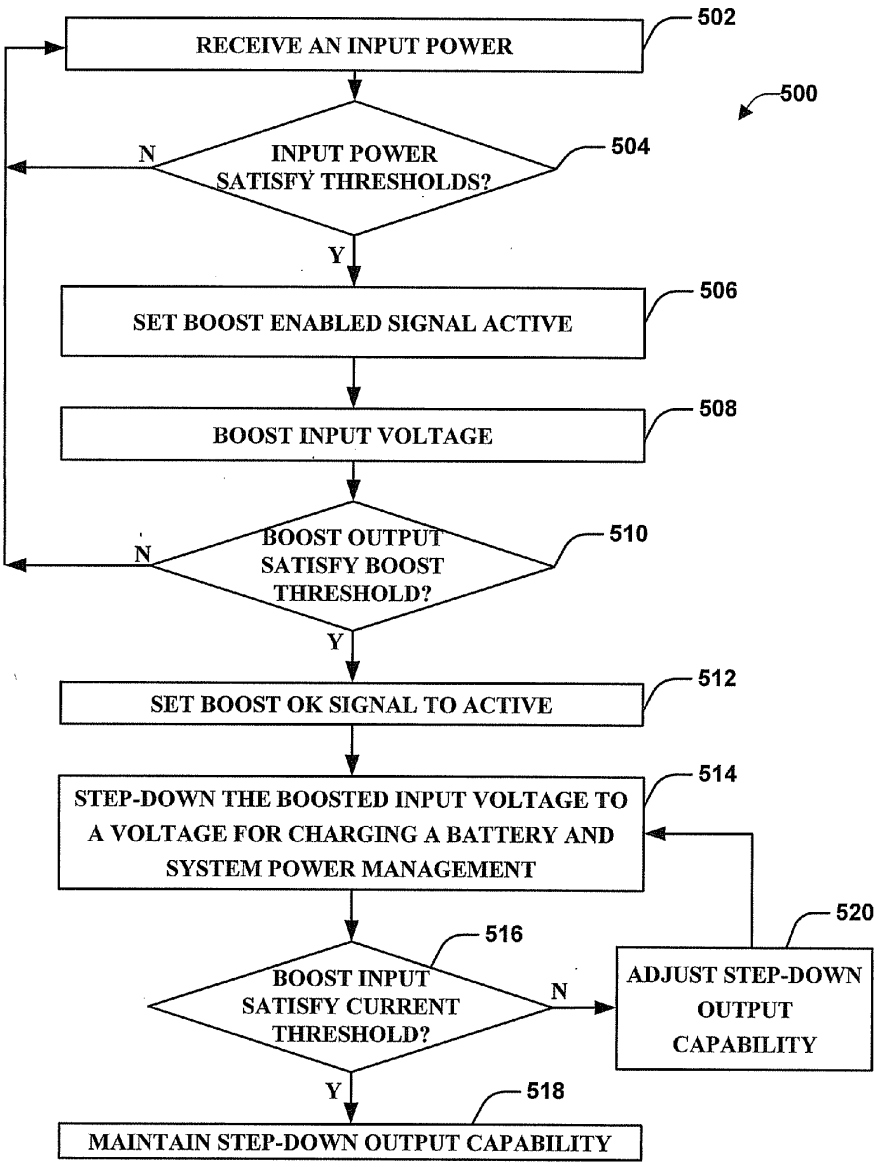
RECEIVE AN INPUT POWER
502
500
INPUT POWER SATISFY THRESHOLDS?
504
N
Y
SET BOOST ENABLED SIGNAL ACTIVE
506
BOOST INPUT VOLTAGE
508
BOOST OUTPUT SATISFY BOOST THRESHOLD?
510
N
Y
SET BOOST OK SIGNAL TO ACTIVE
512
STEP-DOWN THE BOOSTED INPUT VOLTAGE TO A VOLTAGE FOR CHARGING A BATTERY AND SYSTEM POWER MANAGEMENT
514
BOOST INPUT SATISFY CURRENT THRESHOLD?
516
N
Y
ADJUST STEP-DOWN OUTPUT CAPABILITY
520
MAINTAIN STEP-DOWN OUTPUT CAPABILITY
518

FIG. 5

BOOSTING INPUT POWER

BACKGROUND

[0001] Rechargeable lithium ion (Li-ion) batteries have become standard in portable computing devices, such as laptops, tablets, and smart phones. Consumers expect powerful mobile devices that can operate for extended periods of time from a battery source. Li-ion batteries have proven to be very effective for these applications.

[0002] In order to achieve the greatest user convenience, modern mobile devices should support five volt and universal serial bus (USB) charging. Such charging systems may use a boost circuit followed by a buck charging circuit, and are unable to sense a status of a five volt power rail for the USB. Instead, typical charging systems only sense the boost circuit high voltage power rail. Charging circuits that only sense the boost circuit high voltage power rail may have a low power utilization efficiency, because the charging circuit must account for multiple factors and tolerances to avoid damage from over current/over voltage inputs.

BRIEF DESCRIPTION OF THE DRAWINGS

[0003] FIG. **1** illustrates an example high level block diagram of a boost charge system based on a discrete solution with direct input sensing in accordance with various aspects of embodiments disclosed.

[0004] FIG. **2** illustrates an example charge management component in accordance with various embodiments that are disclosed.

[0005] FIG. **3** illustrates an example charge management component in accordance with various embodiments that are disclosed.

[0006] FIG. **4** illustrates an example boost control feedback component in accordance with aspects of various embodiments disclosed.

[0007] FIG. **5** illustrates an example of a flow diagram showing an example of a non-limiting embodiment for a boost charge solution with direct input sensing in accordance with aspects of various embodiments disclosed.

DETAILED DESCRIPTION

[0008] One or more implementations of the present disclosure are described with reference to the attached drawings, wherein like reference numerals are used to refer to like elements throughout.

[0009] Referring now to FIG. **1**, illustrated is an example high level block diagram of a boost charge system **100** based on a discrete solution with direct input sensing. The system **100** includes a computing device **102**. The computing device **102** (device **102**) can include but is not limited to a smart phone, a cell phone, a personal digital assistant (PDA), a tablet, a laptop, a desktop, a portable music player, a video game system, an electronic reader (e-reader), a global positioning system (GPS), a set-top box, and/or a television.

[0010] The device **102** includes a universal serial bus (USB) **104**, a charge management component **106**, and a battery **110**. The USB **104** enables the device **102** to communicate, supply power to, and/or receive power from an external device **112**. For example, the external device **112** can include a keyboard, pointing device, digital camera, printer, portable media player, disk drive, other computing device, and/or network adapter. As an additional or alternative example, the external device can include a battery charger that supplies power via the USB **104** to recharge the battery **110**. In one implementation, the battery **110** can include but is not limited to a rechargeable lithium-ion (Li-ion) battery having, for example, two cells in series (**2**S) or three cells in series (**3**S).

[0011] The charge management component **106** controls, directs, or otherwise manages recharging the battery **110** via the USB **104**. USB connections may operate on about five volts (5V), and the voltage required to charge the battery **110** can be, for example, from about 10V to about 24V. The charge management component **106** can increase (e.g., step-up) the voltage received from a battery charger via the USB **104** (e.g., about 5V) to the voltage required to charge the battery **110** (e.g., about 10V to 24V). In addition, the charge management component **106** provides over current/over voltage protection for the device **102** and/or battery **110**. For example, a user of the device **102** may accidently connect an incorrect or faulty adapter to the USB **104** that could damage the device **102** and/or battery **110**.

[0012] FIG. **2** illustrates an example charge management component **106** in accordance with various embodiments that are disclosed. In one example configuration, the charge management component **106** comprises an input management component **202**, a boost component **204** (e.g., boost circuit), and a step-down charge component **206**. The input management component **202** obtains, acquires, or otherwise receives an input power from a power source **208**. For example, in one configuration, the input management component **202** is adapted to receive about a five volt (5V) direct current (DC) power source via the USB **104**.

[0013] The input power management component **202** senses an input current and an input voltage provided by the power source **208** (e.g., direct input sensing). The input power management component **202** determines whether the input current satisfies an input current threshold, and whether the input voltage satisfies an input voltage threshold. For example, in one configuration, the input management component **202** checks a status of the input current using an analog signal (e.g., a differential signal) containing a change in voltage (delta voltage) between a current-sensing positive input (CSIP) and a current-sensing negative input (CSIN), and instructs the step-down charge component **206** to adjust an output capability based on the status of the input current using an output power adjustment signal **216**. For instance, if the input current is less than a lower limit, then step-down charge component **206** can increase the output capability based on the output power management signal **216**. If the input voltage satisfies the input voltage threshold, then the input management component **202** sends, asserts, or makes active an INPUT OK signal **210** (e.g., boost enabled or BOOST_EN). For example, in one configuration, the INPUT OK signal **210** has a default low (e.g., 0), and when the input voltage satisfies the input voltage threshold, the input management component **202** makes the INPUT OK signal **210** high (e.g., 1). If the input voltage does not satisfy the input voltage threshold (e.g., over current), then the input signal **210** remains low. The input management component **202** protects the device **102** from an inappropriate (e.g., over current or over voltage) input power source **208**.

[0014] The boost component **204** receives the input power (e.g., 5V) from the input management component **202**. If the INPUT OK signal **210** is active (e.g., 1, true, etc.), then the boost component **204** increases, steps-up, or otherwise boosts the input voltage. For example, in one configuration, the boost

ADC EX1016
IPR2025-00885

component **204** includes a switching-mode power supply (SMPS). It is to be appreciated that Power=Voltage*Current (P=V*I). Therefore, the output of the boost component **204** will have a higher voltage (e.g., high voltage) and a lower current than the input power received from the input management component **202**. In addition, the boost component **204** compares the boost output (e.g., high voltage) to a boost threshold. If the boost output satisfies the boost threshold, then the boost component **204** sends, asserts, or makes active a BOOST OK signal **212**. For example, in one configuration, the BOOST OK signal **212** has a default low (e.g., 0), and the boost component **204** makes the BOOST OK signal **212** high (e.g., 1) when the boost output satisfies the boost threshold. If the boost output does not satisfy the boost threshold, then the BOOST OK signal **212** remains (or is made) low.

[0015] The step-down charge component **206** acquires, obtains, or otherwise receives the output from the boost component **204** (e.g., high voltage). If the BOOST OK signal **212** is active (e.g., 1, true, etc.), then the step-down charge component **206** decreases, reduces, or otherwise steps-down the boost output voltage. For example, in one configuration, the step-down charge component **206** includes a buck converter (e.g., SMPS) that converts the high voltage output of the boost component to a lower voltage required for charging a battery (e.g., about to 10V to 24V for a Li-ion battery). As discussed, P=V*I. Therefore, the output of the step-down charge component **206** will have a lower voltage (e.g., high voltage) and a higher current than the output of the boost component **204**. The highest current appropriate for charging a Li-ion battery can be about 25% of the total capacity of the battery in amp hours.

[0016] FIG. **3** illustrates an example charge management component **106** in accordance with various embodiments that are disclosed. In one example configuration, the charge management component **106** includes a regulator and charger component **214**, a boost component **204**, a current sensing component **302**, and a voltage sensing component **304**. The regulator and charger component **214** includes the features of the input management component **202** and step-down charge component **206** (discussed in greater detail with reference to FIG. **2**) into a single component. For example, in one configuration, the regulator and charger component **214** and current sensing component **302** can be implemented using an integrated circuit (IC) **306** (subsystem **306**), such as an INTERSIL™ ISL9519Q Narrow VDC Regulator/Charger with system management bus (SMBus) Interface.

[0017] The subsystem **306** obtains, acquires, or otherwise receives an input power from a power source **208** (e.g., 5V DC), for example, via the USB **104**. The current sensing component **302** senses an input current provided by the power source **208**, and the voltage sensing component **304** senses an input voltage provided by the power source **208**. If the input voltage satisfies an input voltage threshold, then the voltage sensing component **304** makes active a boost enable (BOOST_EN) signal **210** (e.g., INPUT OK). If the input voltage does not satisfy the input threshold (e.g., over voltage), then the BOOST_EN **210** remains (or is made) inactive. If the input current satisfies an input current threshold, then the current sensing component **302** instructs (e.g., using an analog output power adjustment signal) the regulator and charger component **214** to maintain a present output capability (e.g., using the output power adjustment signal **216**). If the input current does not satisfy the input current threshold (e.g., over current or lower than threshold), then the current sensing component **302** instructs the regulator and charger component **214** to adjust the output capability. For instance, if the input current is less than a lower limit, then the regulator and charger component **214** can increase the output capability.

[0018] The boost component **204** receives the input power (e.g., 5V) from the power source **208**. If the BOOST_EN signal **210** is active (e.g., **1**, true, etc.), then the boost component **204** increases or boosts the input voltage. The voltage sensing component **304** compares the boost output (e.g., high voltage) to a boost threshold. If the boost output satisfies the boost threshold, then the voltage sensing component **304** makes active a BOOST OK signal **212**. If the boost output does not satisfy the boost threshold, then the BOOST OK signal **212** remains (or is made) inactive.

[0019] The regulator and charger component **214** receives the boost output from the boost component **204** (e.g., high voltage). If the BOOST OK signal **212** is active (e.g., 1, true, etc.), then the regulator and charger component **214** generates a charging voltage by stepping-down the boost output voltage. As discussed, P=V*I. Therefore, the output (e.g., charging voltage) of the regulator and charger component **214** (e.g., charging voltage) will have a lower voltage (e.g., high voltage) and a higher current than the output of the boost component **204**.

[0020] FIG. **4** illustrates an example of a boost control feedback component **402** in accordance with aspects of various embodiments disclosed. The control feedback component **402** obtains, acquires, or otherwise receives a boost input power. The boost input power can include the input power (e.g., 5V) from the input management component **202** (discussed in greater detail with reference to FIG. **2**). The boost input power provides power to a power supply pin **406** (VDD **406**) of a dual voltage detector **404**.

[0021] During power-on of the dual voltage detector **404**, a RESET pin **408** (RESET **408**) of the dual voltage detector **404** is active or asserted when the VDD **406** is higher than a first predetermined threshold (e.g., VDD **406** higher than 3.0V or BOOST INPUT higher than 3.858V) and a RSTSENSE pin **410** (RSTSENSE **410**) of the dual voltage detector **404** is active or asserted when the voltage at an HSENSE pin **414** (e.g., boost output or high voltage) exceeds a second predetermined threshold (e.g., HSENSE **414** higher than 1.207 V, or BOOST OUTPUT higher than 8.7V). During operation, the dual voltage detector **404** monitors the VDD **406** and the LSENSE **412**, and maintains a BOOST_EN signal **210** (e.g., using the RESET **408**) and a BOOST OK signal **212** (e.g., using the RSTSENSE **410**) active when the VDD **406** (e.g., boost input) and the LSENSE **412** (e.g., boost output) exceeds a threshold voltage (VIT). If the voltage at VDD **406** is less than the VIT, then the dual voltage detector **404** deasserts, maintains as, or makes inactive the reset **408**. If the voltage at LSENSE **412** is less than the VIT, then the dual voltage detector **404** deasserts, maintains as, or makes inactive the RSTSENSE **410**.

[0022] A diode **418** clamps the BOOST OK signal **212** (e.g., output from the RSTSENSE **410**) to the BOOST_EN **210** signal, and prevents current from the BOOST_EN signal **210** from flowing to the BOOST OK signal **212**. Therefore, as long as the voltage of the boost input at the VDD **406** is less than the VIT, then BOOST OK **212** and the BOOST_EN **210** will remain inactive. In addition, a resistor **420** couples the boost input to the BOOST_EN **210** to provide a pull up power of the open drain type output RESET **408**, and a resistor **426** couples the boost input to the BOOST_OK **212** to provide a

ADC EX1016
IPR2025-00885

pull up power for the open drain type output RSTSENSE **410**. A set of resistors (R**1**, R**2** and R**3**) form a voltage divider **422** that creates a hysteresis detection threshold at HSENSE and LSENSE, and asserts RSTSENSE **410** when the BOOST OUTPUT exceeds a third predetermined threshold (e.g., 8.7V), and deasserts RSTSENSE **410** when the BOOST OUTPUT is less than a fourth predetermined threshold (e.g., 8.499V). A pair of resistors (R**4** and R**5**) form a voltage divider **424** that reduces the voltage of the boost input at the VDD **406** as a function of the values of R**4** and R**5**. In one example configuration, the control feedback component **402** (e.g., voltage sensing component **304**) can be included in the charge management component **106** and/or the boost component **204**. For instance, the control feedback component **402** can be implemented using an integrated circuit (IC), such as a Texas Instrument™ TPS3806I33 dual voltage detector with adjustable hysteresis.

[0023] While the methods described within this disclosure are illustrated in and described herein as a series of acts or events, it will be appreciated that the illustrated ordering of such acts or events are not to be interpreted in a limiting sense. For example, some acts can occur in different orders and/or concurrently with other acts or events apart from those illustrated and/or described herein.

[0024] An example methodology **500** for a boost charge solution with direct input sensing is illustrated in FIG. **5**. At **502**, an input power is received. For example, in one configuration, about five volts (5V) direct current (DC) is received via a universal serial bus (USB). At **504**, a determination is made whether the input power satisfies an input current threshold and/or input voltage threshold. For example, in one configuration, a determination is made whether the input voltage is greater than a predetermined upper limit. At **506**, if it is determined that the input voltage satisfies the input voltage threshold (Y at **504**), then a boost enabled (e.g., BOOST_EN or INPUT OK **210**) signal is set to active (e.g., high, 1, true, etc.). Returning to **504**, if it is determined that the input voltage does not satisfy the input voltage threshold (N at **504**), then the boost enabled signal is set to (or remains) inactive (e.g., low, 0, false, etc.).

[0025] At **508**, the input voltage is boosted. For example, in one implementation, the input voltage is boosted using a switching-mode power supply (SMPS). At **510**, a determination is made whether the boost output voltage satisfies a boost voltage threshold. For example, in one configuration, a determination is made whether the boost output voltage is less than a predetermined upper limit. At **512**, if it is determined that the boost output voltage satisfies the boost threshold (Y at **510**), then a boost ok (e.g., BOOST OK **212**) signal is set to active (e.g., high, 1, true, etc.). Returning to **510**, if it is determined that the boost output voltage does not satisfy the boost threshold (N at **510**), then the boost ok signal is set to (or remains) inactive (e.g., low, 0, false, etc.).

[0026] At **514**, the boost output voltage is stepped-down to a voltage for charging for a battery and system power management. For example, in one configuration, the boost output voltage is stepped-down using a buck converter (e.g., SMPS) that converts the high voltage boost output to a lower voltage required for charging a battery. In one configuration, the battery (e.g., battery **110**) can include but is not limited to a rechargeable lithium-ion (Li-ion) battery having two cells in series (2S) or three cells in series (3S). The voltage required to charge a 2S/3S Li-ion battery **110** can be from about 10V to about 24V, and the highest current appropriate for charging a Li-ion battery is about 25% of the total capacity of the battery in amp hours.

[0027] At **516**, a determination is made whether the boost input current satisfies a boost input current threshold. At **518**, if it is determined that the boost input current does satisfy the boost input current threshold (Y at **516**), then a present step-down output level or capability is maintained. At **520**, if it is determined that the boost input current does not satisfy the boost input current threshold (N at **516**), then the step-down output capability is adjusted. For example, in one configuration, if the boost input current is below a boost input current lower limit, then the step-down output capability can be increased.

[0028] Many variations and modifications can be made to the above-described examples. All such modifications and variations are intended to be included herein within the scope of the disclosure and protected by the following claims. It will be noted that the singular forms "a," "an," and "the" include plural references unless the context clearly indicates otherwise.

What is claimed is:

1. An electronics system, comprising:

an input power management component that receives an input power, determines an input voltage satisfies an input voltage threshold, and in response to the input voltage satisfying the input voltage threshold, activates a boost enabled signal;

a boost component that determines the boost enabled signal is activated, and in response to the boost enabled signal being activated, generates a boost output voltage using an input voltage; and

a step-down charging component that converts the boost output voltage to an output for charging a battery.

2. The electronics system of claim **1**, wherein the input power management component determines an input current does not satisfy an input current threshold, and in response to the input current not satisfying the input current threshold, instructs the step-down charge component to adjust an output capability based on a status of the input current.

3. The electronics system of claim **1**, wherein the input power management component receives the input voltage via a universal serial bus.

4. The electronics system of claim **1**, wherein the battery is a lithium-ion battery.

5. The electronics system of claim **4**, wherein the lithium-ion battery includes at least one of two cells in series or three cells in series.

6. The electronics system of claim **1**, further comprising a boost control feedback component that controls generation of the boost output voltage by the boost component based at least in part on feedback regarding the boost output voltage.

7. The electronics system of claim **1**, wherein

the input power management component determines the input voltage does not satisfy the input voltage threshold; and

in response to the input voltage not satisfying the input threshold, the boost component does not generate a boost output voltage using the input voltage.

8. The electronics system of claim **1**, wherein at least one of the input power management component, the boost component, or the step-down charging component is included in a computing device.

9. The electronics system of claim **1**, wherein the input power management component and step-down charging component are included in a first integrated circuit.

ADC EX1016
IPR2025-00885

10. A method, comprising:

receiving an input power;

detecting an input voltage;

determining that the input voltage satisfies a first predetermined threshold;

in response to the input voltage satisfying the first predetermined threshold, boosting the input power to generate a high voltage output;

determining that the high voltage output does not exceed a second predetermined threshold; and

in response to the high voltage output not exceeding the second predetermined threshold, stepping down the high voltage output to a charging output.

11. The method of claim **10**, further comprising:

determining an input current is less than a lower limit; and

in response to the input current being less than the lower limit, increasing the charging output.

12. The method of claim **10**, wherein the receiving the input power includes receiving the input power from a universal serial bus.

13. The method of claim **10**, wherein the stepping down the high voltage output to the charging output, includes stepping down the high voltage output to a charging output for a lithium-ion battery.

14. The method of claim **10**, wherein the stepping down the high voltage output to a charging voltage for the lithium-ion battery, includes stepping down the high voltage output to a charging output for a lithium-ion battery having at least one of two cells in series or three cells in series.

15. The method of claim **10**, further comprising controlling the boosting the input power based at least in part on feedback regarding the high voltage output.

* * * * *

ADC EX1016
IPR2025-00885