US 20070108940A1

(19) United States

(12) Patent Application Publication

(10) Pub. No.: US 2007/0108940 A1

(43) Pub. Date: May 17, 2007

Sainomoto et al.

(54) RECHARGEABLE BATTERY PACK FOR A POWER TOOL

(75) Inventors: **Yoshinori Sainomoto**, Sanda-shi (JP); **Toshiharu Ohashi**, Maibara-shi (JP); **Hiroshi Miyazaki**, Hikone-shi (JP)

Correspondence Address:
ARMSTRONG, KRATZ, QUINTOS, HANSON & BROOKS, LLP
1725 K STREET, NW
SUITE 1000
WASHINGTON, DC 20006 (US)

(73) Assignee: **MATSUSHITA ELECTRIC WORKS, LTD.**, Kadoma-shi (JP)

(21) Appl. No.: **11/599,415**

(22) Filed: **Nov. 15, 2006**

(30) **Foreign Application Priority Data**

Nov. 17, 2005 (JP) 2005-333282

Publication Classification

(51) **Int. Cl.**
H02J 7/00 (2006.01)

(52) **U.S. Cl.** **320/112**

(57) **ABSTRACT**

A battery pack for a power tool of self-contained over-charge protection is proposed. The battery pack includes a battery stack composed of a plurality of series connected secondary cells, and a charge terminal connected through a charge current path to the battery stack for flowing a charge current from a charger. The battery pack includes an interrupter inserted in the charge current path, and an over-charge detector which detects a cell voltage across each of the secondary cells and actuates the interrupter to open the charge current path when any one of the cell voltages becomes higher than a predetermined threshold (V_{TH3}). Thus, even if the charger fails to limit the charge current, the battery pack can itself protect the secondary cells from being over-charged.

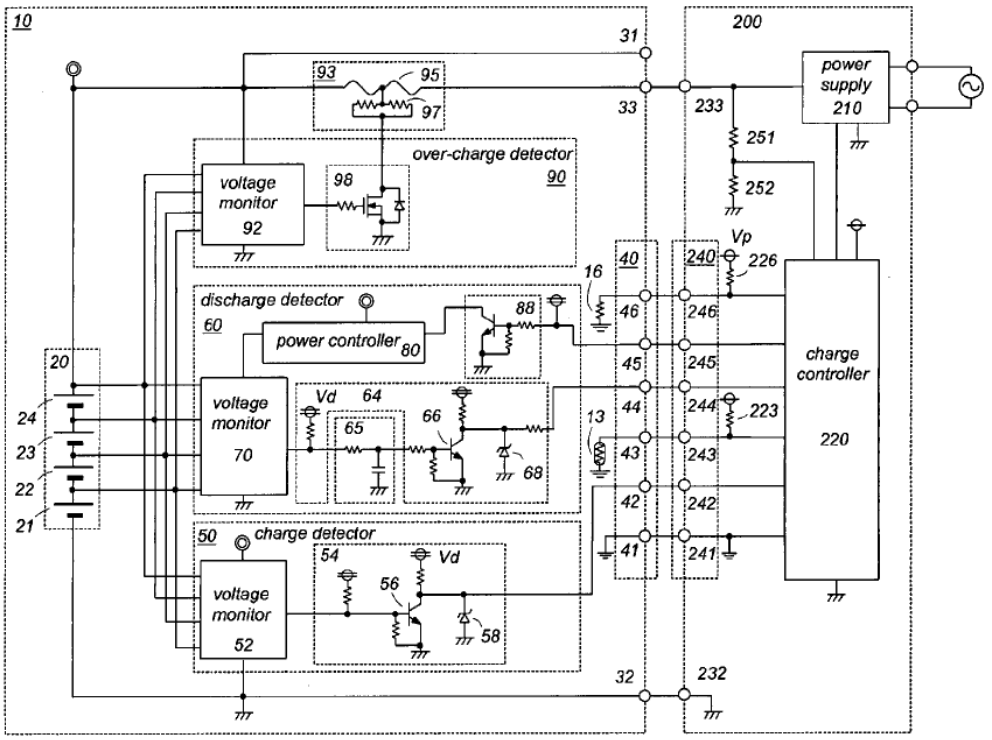

ADC EX1041
IPR2025-00885

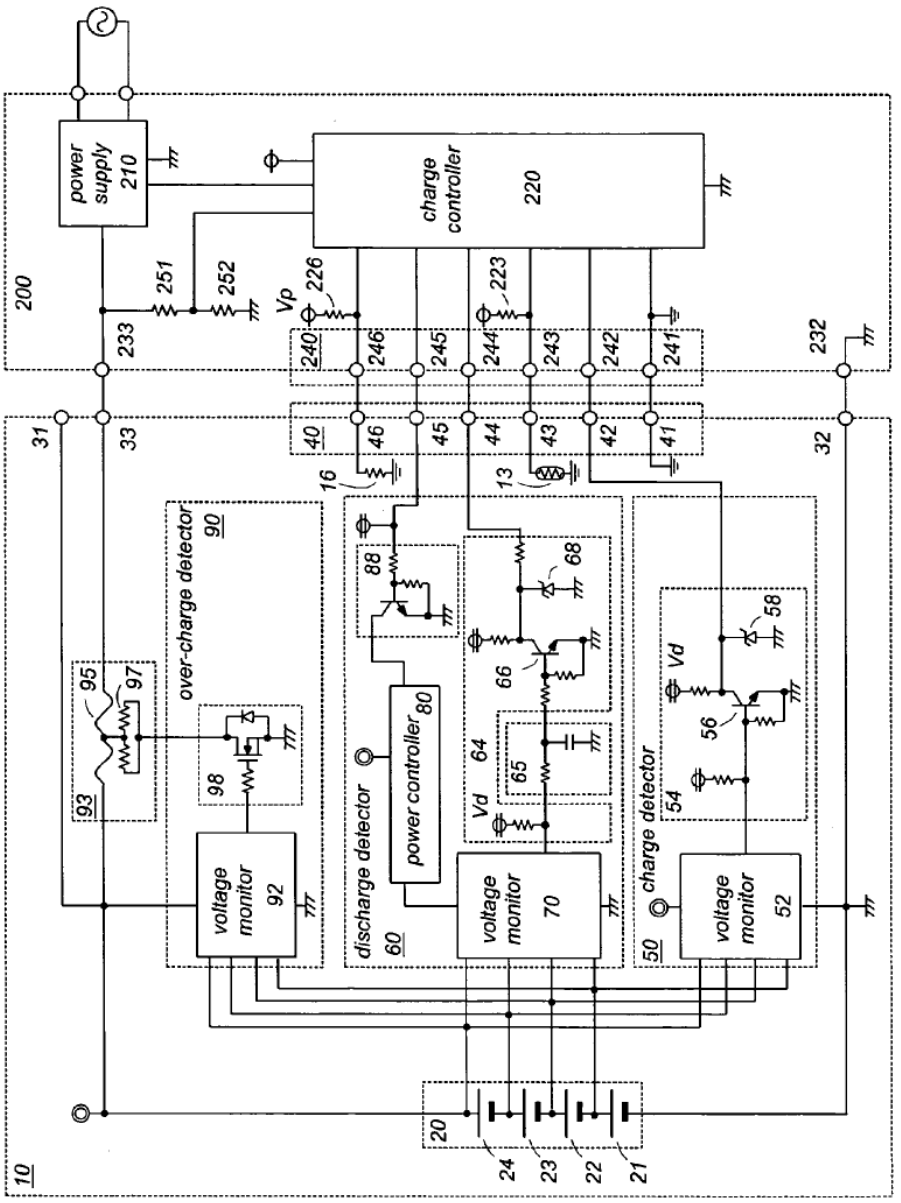
power supply 210
charge controller 220
200
251
252
Vp
226
223
233
232
240
246
245
244
243
242
241
31
33
40
46
45
44
43
42
41
32
16
13
over-charge detector 90
discharge detector 60
charge detector 50
95
97
93
98
88
68
66
64
65
Vd
58
56
54
voltage monitor 92
power controller 80
voltage monitor 70
voltage monitor 52
20
24
23
22
21
10

FIG. 1

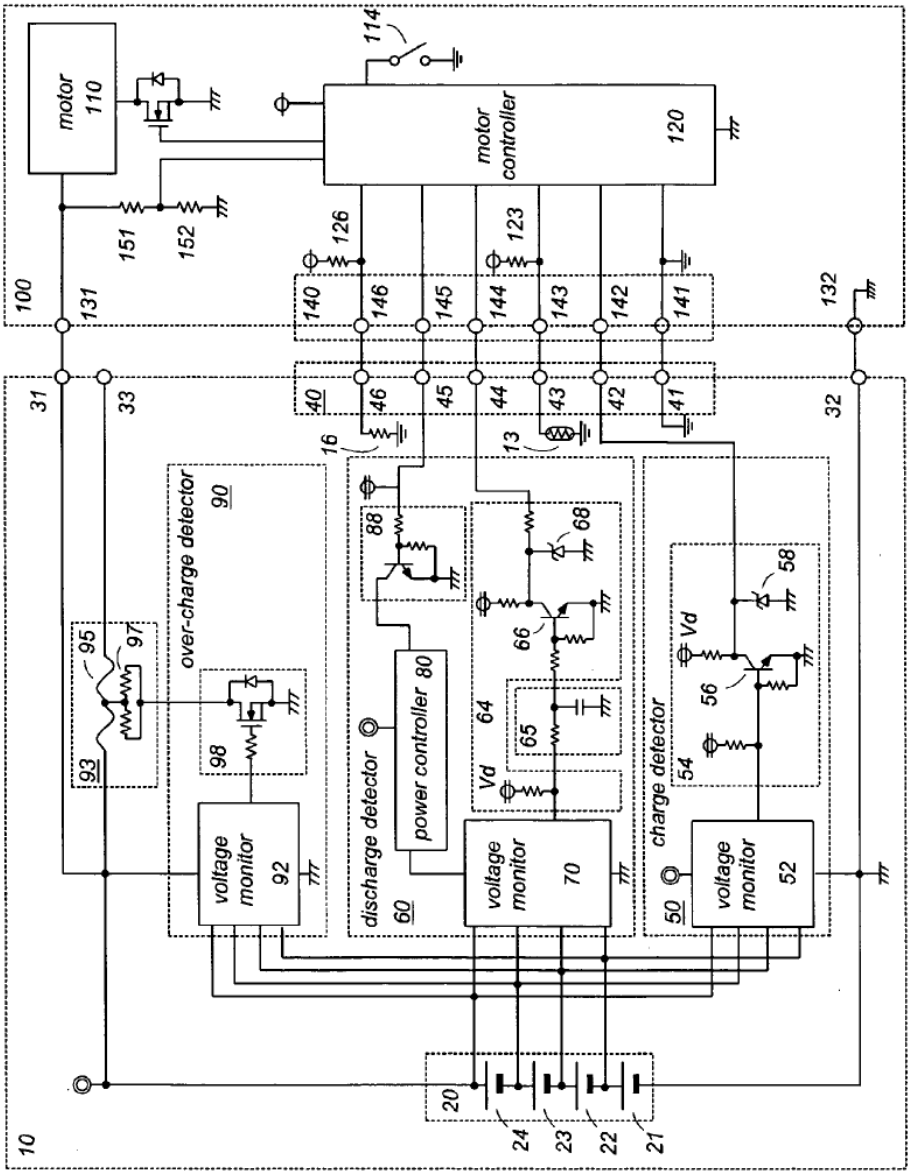

FIG. 2

ADC EX1041
IPR2025-00885

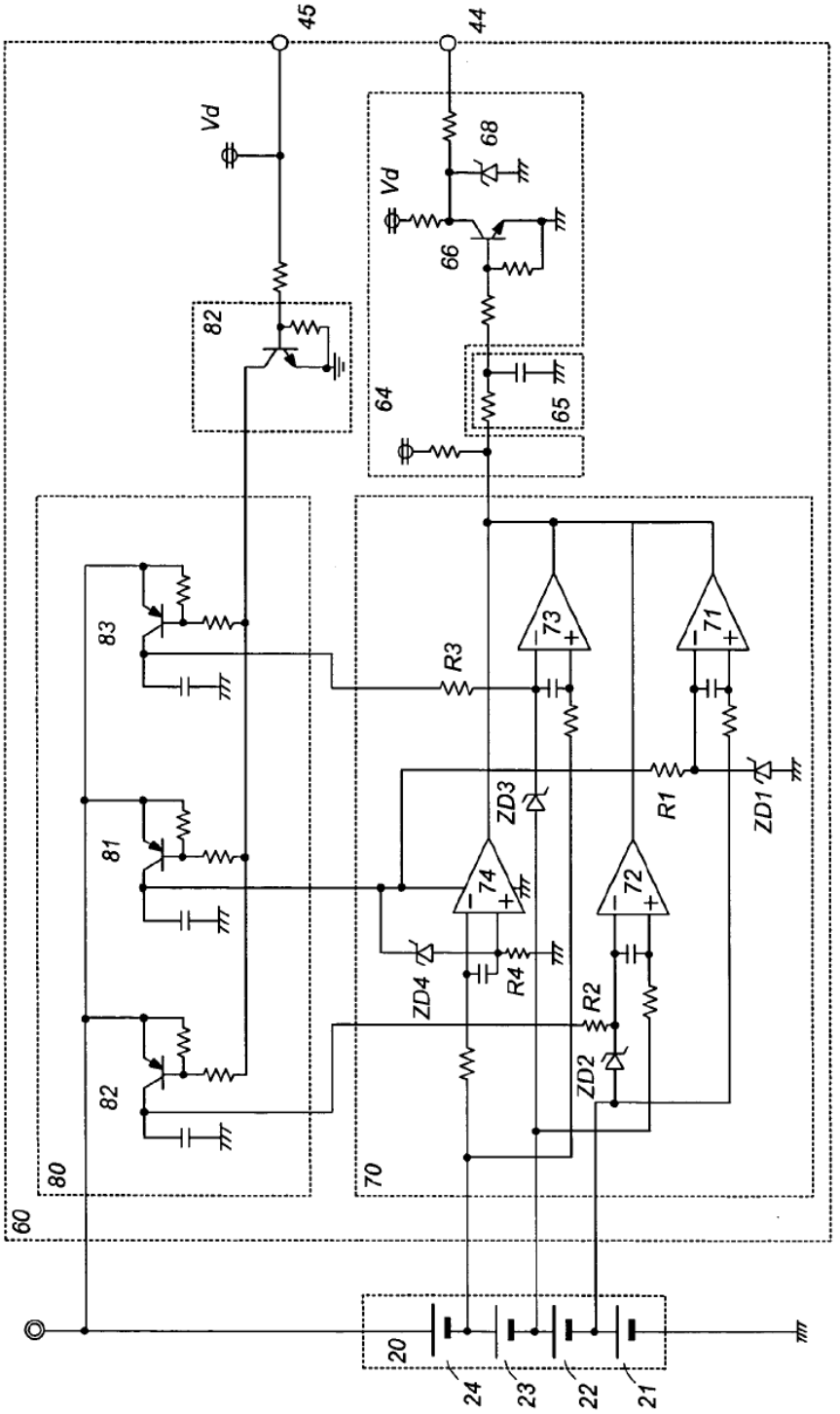

FIG. 3

ADC EX1041
IPR2025-00885

FIG. 4

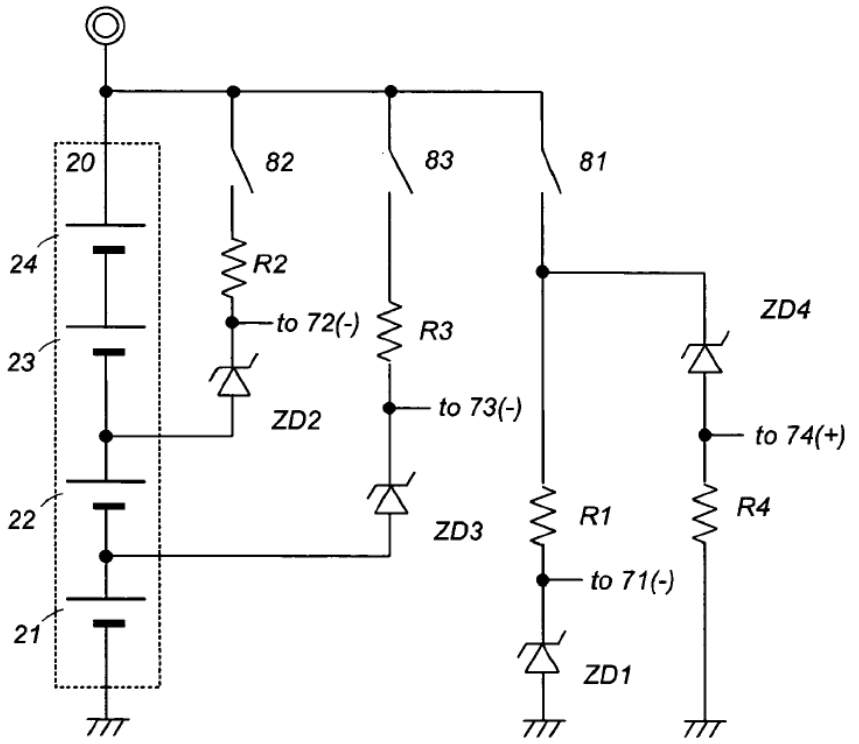

ADC EX1041
IPR2025-00885

RECHARGEABLE BATTERY PACK FOR A POWER TOOL

TECHNICAL FIELD

[0001] The present invention is directed to a rechargeable battery pack for a power tool, and is more particularly to a battery pack with a self-contained over-charge protection.

BACKGROUND ART

[0002] A rechargeable battery pack has been widely utilized for a power tool. Recently, a lithium-ion battery becoming prevalent over conventional nickel-cadmium and nickel-hydrogen batteries because of its high power generating capability and also of a light weight structure. In order to safely utilize the lithium-ion battery for the power tool, it is required to make a protection against over-charging of the battery, since the lithium-ion battery is especially susceptible to an over-charging and may rapidly deteriorate by the over-charging.

[0003] In order to avoid the over-charging, Japanese Patent Publication JP 2005-218174 A and JP2005-131770 A propose a combination of a battery pack and a charger. The battery pack has a battery stack composed of a series connected secondary cells, and incorporates a voltage monitor which is configured to detect a cell voltage across each one of the secondary cells so as to provide a detection signal indicative of the cell voltage to the charger and the power tool. The charger includes a charging circuit of supplying a charge current to the battery stack based upon the detection signal so as to limit the charge current when the detection signal indicates that any one of the cells is over-charged. However, since the over-charging protection relies upon a current controller provided on the side of the charger, the protection cannot work if the charger becomes out of order. Thus, the battery may be accidentally over-charged as a consequence of the failure of the charger.

DISCLOSURE OF THE INVENTION

[0004] In view of the above problem, the present invention has been accomplished to provide a rechargeable battery pack for a power tool which has a self-contained over-charge protection capable of protecting the battery from being over-charged even if an associated charger fails to limit a charge current. The battery pack in accordance with the present invention includes a battery stack composed of a plurality of series connected secondary cells, a pair of power output terminals connected across the battery stack to supply a voltage of the battery stack for operating the power tool, and a signal connector configured to include a charge control terminal, a discharge control terminal, and a signal ground terminal connected to a circuit ground. The battery pack includes a charge detector which is configured to monitor a cell voltage across each one of the secondary cells and to provide a high charge-control signal when all of the cell voltages are lower than a first threshold (V_{TH1}) and a low charge-control signal when any one of the cell voltage becomes higher than the first threshold (V_{TH1}). The high charge-control signal and the low charge-control signal are fed through the charge control terminal to a charger for regulating a charge current of charging the secondary cells. The battery pack also includes a discharge detector which is configured to monitor the cell voltage across each of the secondary cells and to provide a discharge stop signal when any one of the cell voltages becomes lower than a second threshold (V_{TH2}) which is lower than the first threshold (V_{TH1}). The discharge stop signal is fed through the discharge control terminal to the power tool for deenergizing the power tool. The battery pack is also provided with a charge terminal which is separated from one of the power output terminals and is connected to the battery stack for flowing the charge current from the charger to the secondary cells not through the one of the power output terminals. An interrupter is inserted in a charge current path between the charge terminal and the battery stack. The present invention is characterized by an over-charge detector which is included in the battery pack to monitor the cell voltage across each of the secondary cells and to actuate the interrupter to open the charge current path when any one of the cell voltages becomes higher than a third threshold (V_{TH3}) which is higher than the first threshold (V_{TH1}). Thus, even if the charger fails to limit the charge current, the battery pack can itself protect the secondary cells from being over-charged.

[0005] Preferably, the interrupter is a non-resettable element such as a fusing resistor which can be only replaced by a new one once upon the over-charge protection works.

[0006] The discharge detector is preferred to include a voltage monitor and a power controller. The voltage monitor comprises a plurality of comparators and a plurality of constant voltage elements each providing a constant voltage that defines the second threshold (V_{TH2}). Each of the comparators is configured to compare each of the monitored cell voltages with the second threshold to give a comparison result such that the discharge detector provides the discharge stop signal to the discharge control terminal based upon the comparison results. The power controller is configured to connect the battery stack to the voltage monitor when the battery pack is connected to the power tool. Thus, the voltage monitor is made active in response to the battery pack being connected to the power tool, and can be therefore free from consuming a current from the battery stack in the absence of the power tool, i.e., the discharge current being supplied to the power tool. With this result, the battery pack can minimize power consumption within the discharge detector when the battery pack is being disconnected from the power tool. The power controller is configured to have a plurality of different current supply paths which supply a current from a common potential of the battery stack respectively to different potentials of the battery stack through each one of the constant voltage sources. Each of the current supply paths includes a switch which is configured to close only in response to a detection signal issued when the battery pack is connected to the power tool. Accordingly, no leak current flows across each of the secondary cells while the battery pack is left disconnected from the power tool, whereby it is possible to keep the voltage monitor disconnected entirely from the battery stack, assuring to consume no substantial power of the battery pack when the battery pack is left disconnected from the power tool.

[0007] Preferably, the discharge detector includes a delay circuit which delays the discharge stop signal by a predetermined time from the detection that anyone of the cell voltages becomes lower than the second threshold. With the provision of the delay circuit, it is possible to exclude a noise which would otherwise cause an erroneous control.

ADC EX1041
IPR2025-00885

[0008] The power output terminals are composed of a positive output terminal and a ground terminal which is preferably isolated electrically from the circuit ground such that the charge current or discharge current can be well prevented from flowing even if the electrical connection between the battery pack and the charger or the power tool should fail.

[0009] The battery pack of the present invention may further include a temperature sensing element and an ID resistor having a resistance indicative of a kind of the battery stack. The temperature sensing element is connected across a temperature output terminal of the signal connector and the signal ground terminal to provide a temperature signal indicative of a temperature of the battery stack to the temperature output terminal. The ID resistor is connected across an ID output terminal of the signal connector and the signal ground terminal to provide the resistance to the ID output terminal. With the inclusion of these elements, it is possible to give an optimum control of charging the battery stack on the side of the charger and of operating the power tool in well consideration of the temperature and the kind of the battery stack.

BRIEF DESCRIPTION OF THE DRAWINGS

[0010] FIG. **1** is a circuit diagram of a battery pack for a power tool in accordance with a preferred embodiment of the present invention shown as being connected an associated charger;

[0011] FIG. **2** is a circuit diagram of the battery pack shown as being connected to the power tool;

[0012] FIG. **3** is a circuit diagram of a discharge detector incorporated in the above battery pack; and

[0013] FIG. **4** is a schematic diagram illustrating different current flow paths in the above discharge detector.

BEST MODE FOR CARRYING OUT THE INVENTION

[0014] Referring now to FIGS. **1** and **2**, there is shown a battery pack for a power tool in accordance with a preferred embodiment of the present invention. The battery pack **10** has a casing which is detachable to the power tool **100** and to a charger **200**. The casing accommodates therein a battery stack **20** composed of a plurality of series-connected lithium-ion secondary cells **21** to **24**, and carries a pair of power terminals **31** and **32**, a charge terminal **33**, and a signal connector **40** for connection with the power tool **100** and the charger **200**. The power terminals is composed of a positive output terminal **31** and a ground terminal **32** which are connected across the battery stack **20** to supply a discharge current to the power tool **100**, while the charge terminal **33** and the ground terminal **32** are connected across the battery stack **20** to receive a charge current from the charger **200**. The charge terminal **33** is separated from the positive output terminal **31** so that the battery stack **20** receives the charge current not through the positive output terminal **31**.

[0015] The battery pack **10** includes a charge detector **50**, a discharge detector **60**, and an over-charge detector **90** which are configured to detect a cell voltage of each secondary cell **21** to **24** for control of regulating the charge current from the charger, prohibiting the discharge from the battery stack **20** upon detection of an over-discharge condition, and protecting the battery stack **20** from being over-charged, as will be discussed later.

[0016] The signal connector **40** includes, in addition to a signal ground terminal **41** connected to a circuit ground common to the detectors **50**, **60**, and **90**, a charge control output terminal **42**, a temperature output terminal **43**, a discharge control output terminal **44**, a trigger input terminal **45**, and an ID output terminal **46**. The charge control output terminal **42** is provided to output a charge control signal from the charge detector **50**. The charge control signal is received at the charger **200** for regulating the charge current being supplied from the charger **200** to the battery stack **20**. A temperature sensing element **13** is connected across the temperature output terminal **42** and the circuit ground to give a temperature of the battery stack **20**. The discharge control output terminal **44** is provided to output a discharge stop signal from the discharge detector **60** upon detection of the over-discharging condition. The discharge stop signal is fed to the power tool **100** in order to deenergize the power tool **100**, i.e., stop feeding the discharge current to the power tool **100** for protection of the secondary cells. The trigger input terminal **45** is provided to receive a trigger signal from the power tool **100** as well as from the charger **200** to start operating the discharge detector **60**. An ID resistor **16** is connected across the ID output terminal **46** and the circuit ground to give a specific resistance indicative of the kind of the battery pack **10** which is taken in the power tool **100** and the charger **200** for identification of the battery pack **10**. The kind of the battery pack **10** includes the number of the secondary cells and the individual capacity thereof.

[0017] The charger **200** includes a power supply **210** which converts an input AC voltage into a DC voltage for supplying the charge current to the battery stack **20**, and a charge controller **220** which controls the charge current. The charge current is supplied through a charge terminal **233** and a ground terminal **232** in contact respectively with charge terminal **33** and the ground terminal **32** of the battery pack **10**. The charger **200** is equipped with a signal connector **240** which are detachable to the signal connector **40** of the battery pack **10** for receiving and sending signals through terminals **241** to **246** from and to the battery pack **10**.

[0018] The power tool **100** includes an electric motor **110** as a driving source of the power tool, a trigger switch **114** to be manipulated by a user, and a motor controller **120** for controlling the motor **110**. The motor **110** is energized by a discharge current supplied from the battery stack **20** through a power terminal **131** and a ground terminal **132** in contact respectively with the positive output terminal **31** and the ground terminal **32** of the battery pack **10**. The power tool **100** is equipped with a signal connector **140** which are detachable to the signal connector **40** of the battery pack **10** for receiving and sending signal through the terminals **141** to **146** from and to the battery pack **10**.

[0019] The charge detector **50** is configured to detect the cell voltage across each one of the secondary cells **21** to **24** so as to provide a high charge-control signal when all of the cell voltages are lower than a first threshold (V_{TH1}), for example, 4.2V, and a low charge-control signal when any one of the cell voltages becomes higher than the first threshold (V_{TH1}). The charge-control signal is fed through terminals **42** and **242** to the charge controller **220** which

ADC EX1041
IPR2025-00885

regulates to supply a high charge current in response to the high-charge control signal, and a low charge current in response to low charge control signal. After receiving the low charge control signal, the charge controller **220** operates to reduce the charge current gradually while monitoring the overall voltage of the battery stack **20** by means of a voltage divider of resistors **251** and **252** provided in the charger **200**. The charge controller **220** stops supplying the charge current when the overall voltage of the battery stack **20** becomes higher than a predetermined limit, for example, 17.5 V.

[0020] The charge detector **50** includes a first voltage monitor **52** which detects the cell voltage across each one of the secondary cells **21** to **24**, compares each cell voltage with the first threshold (V_{TH1}), and provides a H-level output when any one of the cell voltages is higher than the first threshold, and otherwise provides a L-level output. The output from the first voltage monitor **52** is fed to a signal interface **54** which is composed of a switching transistor **56** and a zener diode **58** to give the high charge-control signal of H-level to the charge control output terminal **42** in response to the L-level output from the first detector **52**, and to give the low charge-control signal of L-level in response to the H-level output from the first detector **52**. The first voltage monitor **52** is constituted by an integrated circuit, and is configured to consume a less current of as less as 1 μA from the battery stack **20**. While, on the other hand, the signal interface **54** is energized by a voltage Vd available only when the battery pack **10** is connected to the charger **200**.

[0021] The charge controller **220** of the charger **200** is configured to start charging the battery stack **20** upon recognizing the connection of the battery pack **10** to the charger **200**, and stop the charging upon detachment of the battery pack **10**. For this purpose, the charger **200** is configured to generate a pull-up voltage Vp which is applied to the terminals **243** and **246** respectively through pull-up resistors **223** and **226**. When the signal connector **40** of the battery pack **10** is connected or disconnected to and from the signal connector **240** of the charger **200**, the voltages at terminals **243** and **246** vary due to the connection or disconnection through terminals **43** and **46** respectively to and from the temperature sensing element **13** and the ID resistor **16**. Based upon the voltage variation, the charge controller **120** acknowledges the connection and disconnection of the battery pack **10** to start and stop the charging. Also, the charge controller **120** is configured to permit the charging only when the temperature detected by the temperature sensing element **13** is below a predetermined temperature, for example, 70° C. Further, the charge controller **120** is configured to select the level of the charge current and/or charging rate thereof in accordance with the kind of the battery stack **20** identified by the voltage signal from the ID resistor **146**.

[0022] The discharge detector **60** incorporated in the battery pack **10** is configured to detect the cell voltage across each one of the secondary cells **21** to **24** and to provide a discharge stop signal when any one of the cell voltages becomes lower than a second threshold (V_{TH2}), for example, 2.0 V lower than the first threshold (V_{TH1}). The discharge stop signal, which is indicative of the over-discharging of the battery stack **20**, is fed through terminals **44** and **144** to the motor controller **120** of the power tool **100** in order to stop driving the motor **110**, i.e., stop deriving the discharge current from the battery stack **20**. The discharge detector **60** includes a second voltage monitor **70** configured to detect the cell voltage across each one of the secondary cells **21** to **24** to compare each cell voltage with the second threshold (V_{TH2}) and to provide a L-level output when any one of the cell voltage is lower than the second threshold (V_{TH2}), and otherwise provide a H-level output. The output of the second voltage monitor **70** is fed through a delay circuit **65** to a signal interface **64** which is composed of a switching transistor **66** and a zener diode **68** to give the discharge stop signal of H-level to the discharge control output terminal **44** in response to the L-level output from the voltage monitor **70**. The delay circuit **65** is composed of a capacitor and a resistor to delay the output from the detector **70**, and therefore the output of the signal interface **64** by a predetermined time to eliminate possible noises for reliable detection of the over-discharging.

[0023] Prior to explaining the details of the discharge detector **60**, it is mentioned that the power tool **100** includes a voltage divider of resistors **151** and **152** for monitoring the overall voltage being supplied from the battery stack **20**. Upon closure of the trigger switch **114** with the battery pack **10** being connected to the power tool **100**, the motor controller **120** provides an enable signal to the terminal **145** which is fed through trigger input terminal **45** as the trigger signal for activating the discharge detector **60**. While the voltage applied to the terminal **143** indicates that the temperature of the battery stack **20** is below the predetermined limit, the motor controller **120** activates the motor **110** and keep activating it unless receiving the discharge stop signal from the discharge detector **60**. The motor controller **120** is also configured to stop the motor **110** when the overall voltage of the battery stack **20** as monitored by the voltage divider on the side of the power tool **100** is lowered below a predetermined level, for example, 10 V, as a result of the over-discharging. The predetermined voltage is known from the voltage signal of the ID resistor **16** received at the terminal **146**.

[0024] The discharge detector **60** further includes a power controller **80** which energizes the second voltage monitor **70** only in response to the trigger signal received at the terminal **45** from the motor controller **120**. The trigger signal is fed to a driver **88** of the power controller **80** such that the power controller **80** is activated to energize the second voltage monitor **70**, i.e., connect the second voltage monitor **70** to the battery stack **20**. The like enable signal is also fed from the charge controller **220** when the battery pack **10** is connected to the charger **200**.

[0025] As shown in FIG. **3**, the second voltage monitor **70** is configured to include a plurality of comparators **71** to **74**, and a plurality of zener diodes ZD**1** to ZD**4** each generating the second threshold (V_{TH2}) and connected to an input of each associated one of the comparators **71** to **74**. Each of the comparators **71** to **74** are connected in circuit to compare the cell voltage of each one of the secondary cells **21** to **24** with the second threshold (V_{TH2}) given by each of the zener diodes ZD**1** to ZD**4**. The power controller **80** includes a plurality of switching transistors **81** to **83** which have individual bases commonly connected to the driver **88** so as to turn on simultaneously in response to the trigger signal. The switching transistors **81** to **83** have individual collectors commonly connected to the positive end of the battery stack **20** so as to give different current supply paths, i.e., a first

ADC EX1041
IPR2025-00885

path extending through first transistor **81** and the zener diode ZD**1** to the ground, a second path extending through the second transistor **82** and the zener diode ZD**2** to a node between the secondary cells **21** and **22**, a third path extending through the third transistor **83** and the zener diode ZD**3** to a node between the secondary cells **22** and **23**, and a fourth patch extending through the first transistor **81** and the zener diode ZD**4** to the circuit ground. The first transistor **81** is also connected to give an operating voltage to the comparators **71** to **74** integrated into a quad-comparator. Thus, the power controller **80** energizes the voltage monitor **70**, i.e., supply the current from the battery stack **20** only in response to the trigger signal, thereby generating the second threshold (V_{TH2}) across each of the zener diodes ZD**1** to ZD**4**. This means that the voltage monitor **70** does not consume the current when the battery pack **10** is left detached from the power tool **100** or the charger **200**. It is noted in this connection that since the voltage monitor **70** of the discharge detector **60** consumes about 1.0 mA due to the circuit design of using the quad-comparator and the individual zener diodes, which is quite higher than the current that is normally consumed at the first voltage monitor **52** of the charge detector **50**, the power controller **80** is required to reduce the amount of idle currents when the battery pack **10** is left disconnected from the power tool or the charger. However, a like power controller **80** may be incorporated also in the charge detector **50** to minimize the idle current.

[0026] The first comparator **71** has its non-inverting input connected to the node between the secondary cells **21** and **22**, and has its inverting input connected to the zener diode ZD**1** so as to provide a L-level output when the cell voltage of the secondary cell **21** is lower than the second threshold (V_{TH2}) given by the zener diode ZD**1**. The second comparator **72** has its non-inverting input connected to the node between the secondary cells **22** and **23**, and has its inverting input connected to the node between the secondary cells **21** and **22** through the zener diode ZD**2** so as to provide a L-level output when the cell voltage of the secondary cell **22** is lower than the second threshold (V_{TH2}). Likewise, the third comparator **73** has its non-inverting input connected to the node between the secondary cells **23** and **24**, and has its inverting input connected to the node between the secondary cells **22** and **23** through the zener diode ZD**3** so as to provide a L-level output when the cell voltage of the secondary cell **23** is lower than the second threshold (V_{TH2}). The fourth comparator **74** has its non-inverting input connected to the positive pole of the battery stack **20** through the zener diode ZD**4** and its inverting input connected to the node between the secondary cells **23** and **24** so as to provide a L-level output when the cell voltage of the secondary cell **24** is lower than the second threshold (V_{TH2}) given by the zener diode ZD**4**. These comparators **71** to **74** are connected in parallel with each other so that the signal interface **64** receives the L-level output and provides the H-level discharge stop signal when any one of the comparator provides the L-level output. Otherwise, the signal interface **64** receives the H-level output and in turn provides the L-level output, enabling to discharge the battery stack **20** for continued operation of the power tool **100**.

[0027] As schematically shown in FIG. **4**, since the switching transistors **81** to **83** give the different current paths extending from the positive terminal of the battery stack **20** respectively to the ground, the different nodes or potentials between the different adjacent pairs of the secondary cells, and also since the zener diodes are inserted respectively in the different current paths to give the second threshold (V_{TH2}) to the associated comparators, no leak current flows across each of the secondary cells **21** to **24** to thereby avoid unnecessary discharging the battery stack **20**. Further, each of the zener diodes ZD**1** to ZD**4** is supplied with the combined voltage of at least two of the secondary cells **21** to **24**, it is possible to apply a sufficient voltage across each zener diode even when the cell voltage of any one of the secondary cells is lowered, thereby assuring reliable detection of each cell voltage. In this regard, resistors R**1** to R**4**, which are connected in series respectively with zener diodes ZD**1** to ZD**4** in the individual current flow paths, are so adjusted to flow a constant current to zener diodes ZD**1** to ZD**4** for consistent and reliable detection of the cell voltage of each secondary cells **21** to **24**.

[0028] When the battery pack **10** is connected to the charger **200**, the charge controller **220** generates and feeds the trigger signal to the driver **88** of the power controller **80** to energize the second voltage monitor **70**. When the discharge stop signal is acknowledged through the terminals **44** and **144** even under a condition that the overall voltage of the battery stack **20** becomes higher than a predetermined level as indicative of that the battery stack **20** is charged sufficiently, the charge controller **220** stops the charging and issues an alert signal indicative of the occurrence of abnormal discharging during the charging. The alert signal is processed to notify the event by means of suitable display or sound. When the charging is completed or stopped, the charge controller **220** provides no trigger signal, thereby deactivating the first voltage monitor **70** through the power controller **80** for minimizing the current consumption on the side of the battery pack **10**.

[0029] Turning back to FIG. **1**, the battery pack **10** further includes an over-charge detector **90** which is configured to stop the inflow of the charge current when the cell voltage of any one of the secondary cells **21** to **24** becomes higher than a third threshold (V_{TH3}), for example, 4.5 V higher than the first threshold (V_{TH1}) for protection of the battery stack **20** in an event that the charge controller **220** should fail to stop supplying the charge current. The over-charge detector **90** includes a third voltage monitor **92** which is constantly energized by the battery stack **20** to compare the cell voltage of each one of the secondary cells **21** to **24** with the third threshold (V_{TH3}) and provides a H-level output when the cell voltage of any one of the secondary cells **21** to **24** becomes higher than the third threshold (V_{TH3}), thereby activating an interrupter **93** by means of a driver **98** so as to open a charge current path from the charger **200** to the battery stack **20**. The interrupter **93** includes a non-resettable element **95** in the form of a fusing resistor and a heater **97** which is activated by the driver **88** to melt the element **95** to open the charge current path in an event that any one of the cells is over-charged beyond the third threshold (V_{TH3}). Since the interrupter **93** is inserted in the charge current path between the charge terminal **33** and the positive pole of the battery stack **20** as being separated from the discharge current path which is formed between the positive pole of the battery stack **20** and the power terminal **31** to flow the discharge current higher than the charge current, the interrupter **93** is only required to flow the relatively small charge current and can be therefore made compact and less-costly for realizing cost-effective and compact design given to the

ADC EX1041
IPR2025-00885

battery pack **10**. The third voltage monitor **92** is designed to consume a current as less as 1 μA.

[**0030**] The ground terminal **32** of the battery pack **10** is separated from the circuit ground, i.e., signal ground terminal **41** of the signal connector **40** such that the discharge current or charge current is prevented from flowing in the charge detector **50**, the discharge detector **60**, and the over-charge detector **90**, if the ground terminal **32** should fail to establish the electrical connection to the ground terminal **132** of the power tool **100**, or the ground terminal **232** of the charger **200**.

[**0031**] The above embodiment discloses the secondary cells of lithium-ion type as a most preferred application of the present invention in which the second threshold (V_{TH2}) is selected to be 2.0 V in consideration of that the lithium-ion cell will deteriorate when the voltage lowers below Fe precipitation voltage (1.0V) or Cu precipitation voltage (0.5V). However, the present invention is not limited to the particular type of the secondary cells and can be equally utilized for other types of the secondary cell. In this regard, the first, second and third thresholds can be suitable selected depending upon the type of the secondary cell.

1. A rechargeable battery pack for a power tool, said battery pack comprising:

a battery stack composed of a plurality of series connected secondary cells;

a pair of power output terminals connected across said battery stack to supply a current from said battery stack for operating said power tool;

a signal connector configured to include a charge control terminal, a discharge control terminal, and a signal ground terminal connected to a circuit ground,

a charge detector configured to monitor a cell voltage appearing across each of said secondary cells and to provide a high charge-control signal when all of the cell voltages are lower than a first threshold (V_{TH1}) and a low charge-control signal when any one of the cell voltage becomes higher than said first threshold (V_{TH1}), said high charge-control signal and said low charge-control signal being fed through said charge control terminal to a charger for regulating a charge current of charging said secondary cells;

a discharge detector configured to monitor said cell voltage across each of said secondary cells and to provide a discharge stop signal when any one of said cell voltages becomes lower than a second threshold (V_{TH2}) which is lower than said first threshold (V_{TH1}), said discharge stop signal being fed through said discharge control terminal to said power tool for deenergizing said power tool;

a charge terminal configured to be separated from one of said power output terminals and connected to said battery stack for flowing said charge current from said charger to said secondary cells not through said one of said power output terminals;

an interrupter inserted in a charge current path between said charge terminal and said battery stack; and

an over-charge detector configured to monitor said cell voltage across each of said secondary cells and to actuate said interrupter to open said charge current path when any one of said cell voltages becomes higher than a third threshold (V_{TH3}) which is higher than said first threshold (V_{TH1}).

2. The rechargeable battery pack as set forth in claim 1, wherein said interrupter is a non-resettable element.

3. The rechargeable battery pack as set forth in claim 1, wherein

said discharge detector comprises a voltage monitor and a power controller,

said voltage monitor comprising a plurality of comparators and a plurality of constant voltage elements each providing a constant voltage which defines said second threshold (V_{TH2}), each of said comparators being configured to compare each of said cell voltages with each of said second threshold to give a comparison result such that said discharge detector provides the discharge stop signal to the discharge control terminal based upon the comparison results,

said power controller being configured to connect said battery stack to said voltage monitor when said battery pack is connected to said power tool;

said power controller having a plurality of different current supply paths which supplies a current from a common potential of said battery stack respectively to different potentials of said battery stack through each one of said constant voltage sources of said voltage monitor,

said power controller having a plurality of switches each of which is inserted in each one of said current supply paths and is configured to close in response to a detection signal issued when said battery pack is connected to said power tool.

4. The rechargeable battery pack as set forth in claim 1, wherein said discharge detector includes a delay circuit which delays the discharge stop signal by a predetermined time from the detection that anyone of said cell voltages becomes lower than said second threshold.

5. The rechargeable battery pack as set forth in claim 1, wherein

said power output terminals are composed of a positive output terminal and a ground terminal, said ground terminal being electrically isolated from said signal ground terminal.

6. The rechargeable battery pack as set forth in claim 1, wherein

said signal connector includes a temperature output terminal and an ID output terminal,

said battery pack further including a temperature sensing element and an ID resistor having a resistance indicative of a kind of the battery stack,

said temperature sensing element being connected across said temperature output terminal and said signal ground terminal to provide a temperature signal indicative of a temperature of said battery stack to said temperature output terminal, and

said ID resistor being connected across said ID output terminal and said signal ground terminal to provide said resistance to said ID output terminal.

* * * * *

ADC EX1041
IPR2025-00885