3GPP TS 36.321 V8.8.0 (2009-12)

Technical Specification

3rd Generation Partnership Project; Technical Specification Group Radio Access Network; Evolved Universal Terrestrial Radio Access (E-UTRA) Medium Access Control (MAC) protocol specification (Release 8)

The present document has been developed within the 3rd Generation Partnership Project (3GPP TM) and may be further elaborated for the purposes of 3GPP.
The present document has not been subject to any approval process by the 3GPP Organizational Partners and shall not be implemented.
This Specification is provided for future development work within 3GPP only. The Organizational Partners accept no liability for any use of this Specification.
Specifications and reports for implementation of the 3GPP TM system should be obtained via the 3GPP Organizational Partners' Publications Offices.

Keywords

UMTS, radio

3GPP

Postal address

3GPP support office address

650 Route des Lucioles - Sophia Antipolis
Valbonne - FRANCE
Tel.: +33 4 92 94 42 00 Fax: +33 4 93 65 47 16

Internet

http://www.3gpp.org

Copyright Notification

No part may be reproduced except as authorized by written permission.
The copyright and the foregoing restriction extend to reproduction in all media.

© 2009, 3GPP Organizational Partners (ARIB, ATIS, CCSA, ETSI, TTA, TTC).
All rights reserved.

UMTS™ is a Trade Mark of ETSI registered for the benefit of its members
3GPP™ is a Trade Mark of ETSI registered for the benefit of its Members and of the 3GPP Organizational Partners
LTE™ is a Trade Mark of ETSI currently being registered for the benefit of its Members and of the 3GPP Organizational Partners
GSM® and the GSM logo are registered and owned by the GSM Association

Contents

Foreword....5

1 Scope....6

2 References....6

3 Definitions and abbreviations....6
3.1 Definitions....6
3.2 Abbreviations....7

4 General....8
4.1 Introduction....8
4.2 MAC architecture....8
4.2.1 MAC Entities....8
4.3 Services....9
4.3.1 Services provided to upper layers....9
4.3.2 Services expected from physical layer....9
4.4 Functions....9
4.5 Channel structure....10
4.5.1 Transport Channels....10
4.5.2 Logical Channels....10
4.5.3 Mapping of Transport Channels to Logical Channels....11
4.5.3.1 Uplink mapping....11
4.5.3.2 Downlink mapping....11

5 MAC procedures....12
5.1 Random Access procedure....12
5.1.1 Random Access Procedure initialization....12
5.1.2 Random Access Resource selection....13
5.1.3 Random Access Preamble transmission....14
5.1.4 Random Access Response reception....14
5.1.5 Contention Resolution....15
5.1.6 Completion of the Random Access procedure....16
5.2 Maintenance of Uplink Time Alignment....17
5.3 DL-SCH data transfer....17
5.3.1 DL Assignment reception....17
5.3.2 HARQ operation....19
5.3.2.1 HARQ Entity....19
5.3.2.2 HARQ process....19
5.3.3 Disassembly and demultiplexing....20
5.4 UL-SCH data transfer....20
5.4.1 UL Grant reception....20
5.4.2 HARQ operation....21
5.4.2.1 HARQ entity....21
5.4.2.2 HARQ process....22
5.4.3 Multiplexing and assembly....24
5.4.3.1 Logical channel prioritization....24
5.4.3.2 Multiplexing of MAC Control Elements and MAC SDUs....25
5.4.4 Scheduling Request....25
5.4.5 Buffer Status Reporting....25
5.4.6 Power Headroom Reporting....26
5.5 PCH reception....27
5.6 BCH reception....27
5.7 Discontinuous Reception (DRX)....27
5.8 MAC reconfiguration....29
5.9 MAC Reset....29
5.10 Semi-Persistent Scheduling....29
5.10.1 Downlink....30
5.10.2 Uplink....30

5.11 Handling of unknown, unforeseen and erroneous protocol data ... 30

6 Protocol Data Units, formats and parameters ... 30
6.1 Protocol Data Units ... 30
6.1.1 General ... 30
6.1.2 MAC PDU (DL-SCH and UL-SCH except transparent MAC and Random Access Response) ... 31
6.1.3 MAC Control Elements ... 32
6.1.3.1 Buffer Status Report MAC Control Elements ... 32
6.1.3.2 C-RNTI MAC Control Element ... 33
6.1.3.3 DRX Command MAC Control Element ... 34
6.1.3.4 UE Contention Resolution Identity MAC Control Element ... 34
6.1.3.5 Timing Advance Command MAC Control Element ... 34
6.1.3.6 Power Headroom MAC Control Element ... 34
6.1.4 MAC PDU (transparent MAC) ... 35
6.1.5 MAC PDU (Random Access Response) ... 35
6.2 Formats and parameters ... 36
6.2.1 MAC header for DL-SCH and UL-SCH ... 36
6.2.2 MAC header for Random Access Response ... 37
6.2.3 MAC payload for Random Access Response ... 38

7 Variables and constants ... 38
7.1 RNTI values ... 38
7.2 Backoff Parameter values ... 39
7.3 PRACH Mask Index values ... 40
7.4 Subframe_Offset values ... 40
7.5 TTI_BUNDLE_SIZE value ... 40
7.6 DELTA_PREAMBLE values ... 40
7.7 HARQ RTT Timer ... 41

Annex A (normative): Handling of measurement gaps ... 42

Annex B (informative): Contention resolution for RACH access ... 43

Annex C (informative): Change history ... 44

Foreword

This Technical Specification has been produced by the 3rd Generation Partnership Project (3GPP).

The contents of the present document are subject to continuing work within the TSG and may change following formal TSG approval. Should the TSG modify the contents of the present document, it will be re-released by the TSG with an identifying change of release date and an increase in version number as follows:

Version x.y.z

where:

- x the first digit:
  - 1 presented to TSG for information;
  - 2 presented to TSG for approval;
  - 3 or greater indicates TSG approved document under change control.
- y the second digit is incremented for all changes of substance, i.e. technical enhancements, corrections, updates, etc.
- z the third digit is incremented when editorial only changes have been incorporated in the document.

1 Scope

The present document specifies the E-UTRA MAC protocol.

2 References

The following documents contain provisions which, through reference in this text, constitute provisions of the present document.

- References are either specific (identified by date of publication, edition number, version number, etc.) or non-specific.
- For a specific reference, subsequent revisions do not apply.
- For a non-specific reference, the latest version applies. In the case of a reference to a 3GPP document (including a GSM document), a non-specific reference implicitly refers to the latest version of that document *in the same Release as the present document*.

[1] 3GPP TR 21.905: "Vocabulary for 3GPP Specifications".

[2] 3GPP TR 36.213: "Evolved Universal Terrestrial Radio Access (E-UTRA); Physical Layer Procedures".

[3] 3GPP TS 36.322: “Evolved Universal Terrestrial Radio Access (E-UTRA); Radio Link Control (RLC) protocol specification”.

[4] 3GPP TS 36.323: “Evolved Universal Terrestrial Radio Access (E-UTRA); Packet Data Convergence Protocol (PDCP) Specification”.

[5] 3GPP TS 36.212: “Evolved Universal Terrestrial Radio Access (E-UTRA); Multiplexing and channel coding”.

[6] 3GPP TS 36.214: “Evolved Universal Terrestrial Radio Access (E-UTRA); Physical layer; Measurements”.

[7] 3GPP TS 36.211: “Evolved Universal Terrestrial Radio Access (E-UTRA); Physical Channels and Modulation”.

[8] 3GPP TS 36.331: “Evolved Universal Terrestrial Radio Access (E-UTRA); Radio Resource Control (RRC); Protocol specification”.

[9] 3GPP TS 36.133: "Evolved Universal Terrestrial Radio Access (E-UTRA); Requirements for support of radio resource management".

[10] 3GPP TS 36.101: "Evolved Universal Terrestrial Radio Access (E-UTRA); User Equipment (UE) radio transmission and reception".

3 Definitions and abbreviations

3.1 Definitions

For the purposes of the present document, the terms and definitions given in TR 21.905 [1] and the following apply. A term defined in the present document takes precedence over the definition of the same term, if any, in TR 21.905 [1].

Active Time: Time related to DRX operation, as defined in subclause 5.7, during which the UE monitors the PDCCH in PDCCH-subframes.

mac-ContentionResolutionTimer: Specifies the number of consecutive subframe(s) during which the UE shall monitor the PDCCH after Msg3 is transmitted.

DRX Cycle: Specifies the periodic repetition of the On Duration followed by a possible period of inactivity (see figure 3.1-1 below).

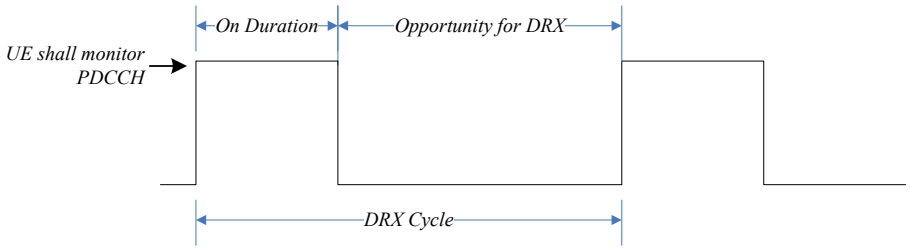

Figure 3.1-1: DRX Cycle

drx-InactivityTimer: Specifies the number of consecutive PDCCH-subframe(s) after successfully decoding a PDCCH indicating an initial UL or DL user data transmission for this UE.

drx-RetransmissionTimer: Specifies the maximum number of consecutive PDCCH-subframe(s) for as soon as a DL retransmission is expected by the UE.

drxShortCycleTimer: Specifies the number of consecutive subframe(s) the UE shall follow the Short DRX cycle.

drxStartOffset: Specifies the subframe where the DRX Cycle starts.

HARQ information: HARQ information consists of New Data Indicator (NDI), Transport Block (TB) size. For DL-SCH transmissions the HARQ information also includes HARQ process ID. For UL-SCH transmission the HARQ info also includes Redundancy Version (RV). In case of spatial multiplexing on DL-SCH the HARQ information comprises a set of NDI and TB size for each transport block.

HARQ RTT Timer: This parameter specifies the minimum amount of subframe(s) before a DL HARQ retransmission is expected by the UE.

Msg3: Message transmitted on UL-SCH containing a C-RNTI MAC CE or CCCH SDU, submitted from upper layer and associated with the UE Contention Resolution Identity, as part of a random access procedure.

onDurationTimer: Specifies the number of consecutive PDCCH-subframe(s) at the beginning of a DRX Cycle.

PDCCH-subframe: For FDD UE operation, this represents any subframe; for TDD, only downlink subframes and subframes including DwPTS.

PRACH Resource Index: The index of a PRACH within a system frame [7]

***ra-PRACH-MaskIndex*:** Defines in which PRACHs within a system frame the UE can transmit a Random Access Preamble (see subclause 7.3).

RA-RNTI: The Random Access RNTI is used on the PDCCH when Random Access Response messages are transmitted. It unambiguously identifies which time-frequency resource was utilized by the UE to transmit the Random Access preamble.

NOTE: A timer is running once it is started, until it is stopped or until it expires; otherwise it is not running. A timer can be started if it is not running or restarted if it is running. A Timer is always started or restarted from its initial value.

3.2 Abbreviations

For the purposes of the present document, the abbreviations given in TR 21.905 [1] and the following apply. An abbreviation defined in the present document takes precedence over the definition of the same abbreviation, if any, in TR 21.905 [1].

BSR Buffer Status Report

C-RNTI	Cell RNTI
CQI	Channel Quality Indicator
E-UTRA	Evolved UMTS Terrestrial Radio Access
E-UTRAN	Evolved UMTS Terrestrial Radio Access Network
MAC	Medium Access Control
LCG	Logical Channel Group
PHR	Power Headroom Report
PMI	Precoding Matrix Index
P-RNTI	Paging RNTI
RA-RNTI	Random Access RNTI
RI	Rank Indicator
RNTI	Radio Network Temporary Identifier
SI-RNTI	System Information RNTI
SR	Scheduling Request
SRS	Sounding Reference Symbols
TB	Transport Block
TPC-PUCCH-RNTI	Transmit Power Control-Physical Uplink Control Channel-RNTI
TPC-PUSCH-RNTI	Transmit Power Control-Physical Uplink Shared Channel-RNTI

4 General

4.1 Introduction

The objective is to describe the MAC architecture and the MAC entity from a functional point of view.

4.2 MAC architecture

The description in this sub clause is a model and does not specify or restrict implementations.

RRC is in control of configuration of MAC.

4.2.1 MAC Entities

E-UTRA defines two MAC entities; one in the UE and one in the E-UTRAN. These MAC entities handle the following transport channels:

- Broadcast Channel (BCH);
- Downlink Shared Channel (DL-SCH);
- Paging Channel (PCH);
- Uplink Shared Channel (UL-SCH);
- Random Access Channel(s) (RACH).

The exact functions performed by the MAC entities are different in the UE from those performed in the E-UTRAN.

Figure 4.2.1.1 illustrates one possible structure for the UE side MAC entity, and it should not restrict implementation.

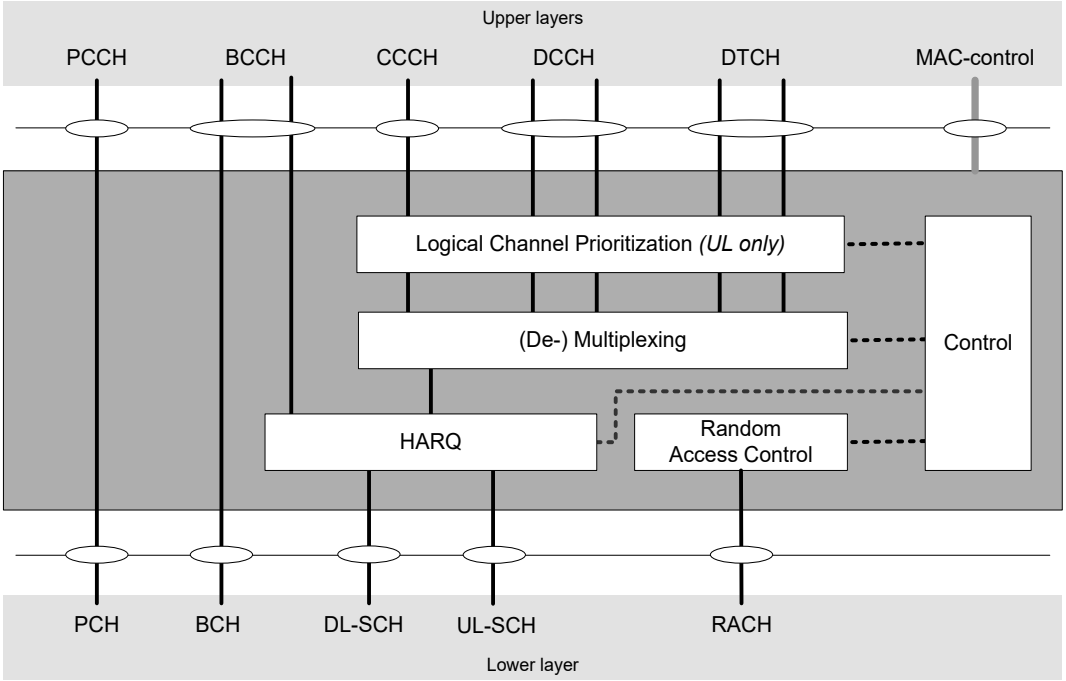

Figure 4.2.1.1: MAC structure overview, UE side

4.3 Services

4.3.1 Services provided to upper layers

This clause describes the different services provided by MAC sublayer to upper layers.

- data transfer
- radio resource allocation

4.3.2 Services expected from physical layer

The physical layer provides the following services to MAC:

- data transfer services;
- signalling of HARQ feedback;
- signalling of Scheduling Request;
- measurements (e.g. Channel Quality Indication (CQI)).

The access to the data transfer services is through the use of transport channels. The characteristics of a transport channel are defined by its transport format (or format set), specifying the physical layer processing to be applied to the transport channel in question, such as channel coding and interleaving, and any service-specific rate matching as needed.

4.4 Functions

The following functions are supported by MAC sublayer:

- mapping between logical channels and transport channels;

- multiplexing of MAC SDUs from one or different logical channels onto transport blocks (TB) to be delivered to the physical layer on transport channels;
- demultiplexing of MAC SDUs from one or different logical channels from transport blocks (TB) delivered from the physical layer on transport channels;
- scheduling information reporting;
- error correction through HARQ;
- priority handling between UEs by means of dynamic scheduling;
- priority handling between logical channels of one UE;
- Logical Channel prioritisation;
- transport format selection.

The location of the different functions and their relevance for uplink and downlink respectively is illustrated in Table 4.4-1.

Table 4.4-1: MAC function location and link direction association.

MAC function	UE	eNB	Downlink	Uplink
Mapping between logical channels and transport channels	X		X	X
		X	X	X
Multiplexing	X			X
		X	X	
Demultiplexing	X		X	
		X		X
Error correction through HARQ	X		X	X
		X	X	X
Transport Format Selection		X	X	X
Priority handling between UEs		X	X	X
Priority handling between logical channels of one UE		X	X	X
Logical Channel prioritisation	X			X
Scheduling information reporting	X			X

4.5 Channel structure

The MAC sublayer operates on the channels defined below; transport channels are SAPs between MAC and Layer 1, logical channels are SAPs between MAC and RLC.

4.5.1 Transport Channels

The transport channels used by MAC are described in Table 4.5.1-1 below.

Table 4.5.1-1: Transport channels used by MAC

Transport channel name	Acronym	Downlink	Uplink
Broadcast Channel	BCH	X	
Downlink Shared Channel	DL-SCH	X	
Paging Channel	PCH	X	
Uplink Shared Channel	UL-SCH		X
Random Access Channel	RACH		X

4.5.2 Logical Channels

The MAC layer provides data transfer services on logical channels. A set of logical channel types is defined for different kinds of data transfer services as offered by MAC.

Each logical channel type is defined by what type of information is transferred.

MAC provides the control and traffic channels listed in Table 4.5.2-1 below.

Table 4.5.2-1: Logical channels provided by MAC.

Logical channel name	Acronym	Control channel	Traffic channel
Broadcast Control Channel	BCCH	X	
Paging Control Channel	PCCH	X	
Common Control Channel	CCCH	X	
Dedicated Control Channel	DCCH	X	
Dedicated Traffic Channel	DTCH		X

4.5.3 Mapping of Transport Channels to Logical Channels

The mapping of logical channels on transport channels depends on the multiplexing that is configured by RRC.

4.5.3.1 Uplink mapping

The MAC entity is responsible for mapping logical channels for the uplink onto uplink transport channels. The uplink logical channels can be mapped as described in Figure 4.5.3.1-1 and Table 4.5.3.1-1.

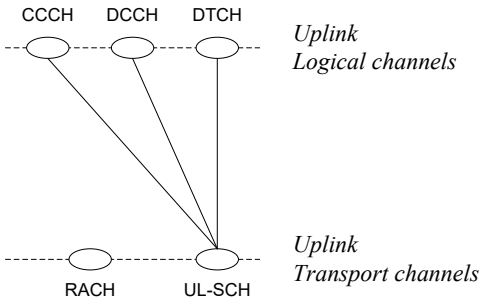

Figure 4.5.3.1-1

Table 4.5.3.1-1: Uplink channel mapping.

Transport channel / Logical channel	UL-SCH	RACH
CCCH	X	
DCCH	X	
DTCH	X	

4.5.3.2 Downlink mapping

The MAC entity is responsible for mapping the downlink logical channels to downlink transport channels. The downlink logical channels can be mapped as described in Figure 4.5.3.2-1 and Table 4.5.3.2-1.

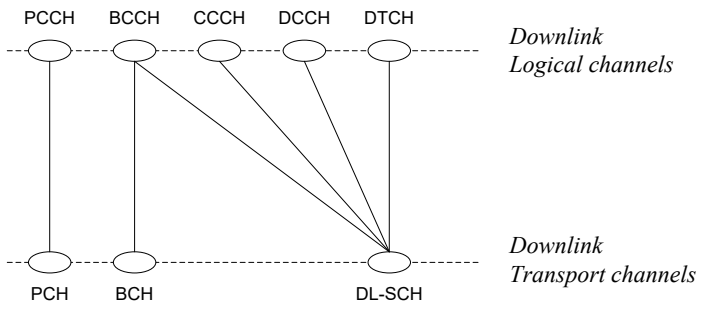

Figure 4.5.3.2-1

Table 4.5.3.2-1: Downlink channel mapping.

Logical channel \ Transport channel	BCH	PCH	DL-SCH
BCCH	X		X
PCCH		X	
CCCH			X
DCCH			X
DTCH			X

5 MAC procedures

5.1 Random Access procedure

5.1.1 Random Access Procedure initialization

The Random Access procedure described in this subclause is initiated by a PDCCH order or by the MAC sublayer itself. If a UE receives a PDCCH transmission consistent with a PDCCH order [5] masked with its C-RNTI, it shall initiate a Random Access procedure. The PDCCH order or RRC optionally indicate *ra-PreambleIndex* and *ra-PRACH-MaskIndex*.

Before the procedure can be initiated, the following information is assumed to be available [8]:

- the available set of PRACH resources for the transmission of the Random Access Preamble, *prach-ConfigIndex*.
- the groups of Random Access Preambles and the set of available Random Access Preambles in each group:

  The preambles that are contained in Random Access Preambles group A and Random Access Preambles group B are calculated from the parameters *numberOfRA-Preambles* and *sizeOfRA-PreamblesGroupA*:

  If *sizeOfRA-PreamblesGroupA* is equal to *numberOfRA-Preambles* then there is no Random Access Preambles group B. The preambles in Random Access Preamble group A are the preambles 0 to *sizeOfRA-PreamblesGroupA* – 1 and, if it exists, the preambles in Random Access Preamble group B are the preambles *sizeOfRA-PreamblesGroupA* to *numberOfRA-Preambles* – 1 from the set of 64 preambles as defined in [7].
- if Random Access Preambles group B exists, the thresholds, *messagePowerOffsetGroupB* and *messageSizeGroupA*, the configured UE transmitted power, P_{CMAX} [10], and the offset between the preamble and Msg3, *deltaPreambleMsg3*, that are required for selecting one of the two groups of Random Access Preambles.
- the RA response window size *ra-ResponseWindowSize*.
- the power-ramping factor *powerRampingStep*.
- the maximum number of preamble transmission *preambleTransMax*.

- the initial preamble power *preambleInitialReceivedTargetPower*.
- the preamble format based offset DELTA_PREAMBLE (see subclause 7.6).
- the maximum number of Msg3 HARQ transmissions *maxHARQ-Msg3Tx*.
- the Contention Resolution Timer *mac-ContentionResolutionTimer*.

NOTE: The above parameters may be updated from upper layers before each Random Access procedure is initiated.

The Random Access procedure shall be performed as follows:

- Flush the Msg3 buffer;
- set the PREAMBLE_TRANSMISSION_COUNTER to 1;
- set the backoff parameter value in the UE to 0 ms;
- proceed to the selection of the Random Access Resource (see subclause 5.1.2).

NOTE: There is only one Random Access procedure ongoing at any point in time. If the UE receives a request for a new Random Access procedure while another is already ongoing, it is up to UE implementation whether to continue with the ongoing procedure or start with the new procedure.

5.1.2 Random Access Resource selection

The Random Access Resource selection procedure shall be performed as follows:

- If *ra-PreambleIndex* (Random Access Preamble) and *ra-PRACH-MaskIndex* (PRACH Mask Index) have been explicitly signalled and *ra-PreambleIndex* is not 000000:
  - the Random Access Preamble and the PRACH Mask Index are those explicitly signalled.
- else the Random Access Preamble shall be selected by the UE as follows:
  - If Msg3 has not yet been transmitted, the UE shall:
    - if Random Access Preambles group B exists and if the potential message size (data available for transmission plus MAC header and, where required, MAC control elements) is greater than *messageSizeGroupA* and if the pathloss is less than P_{CMAX} – *preambleInitialReceivedTargetPower* – *deltaPreambleMsg3* – *messagePowerOffsetGroupB*, then:
      - select the Random Access Preambles group B;
    - else:
      - select the Random Access Preambles group A.
  - else, if Msg3 is being retransmitted, the UE shall:
    - select the same group of Random Access Preambles as was used for the preamble transmission attempt corresponding to the first transmission of Msg3.
  - randomly select a Random Access Preamble within the selected group. The random function shall be such that each of the allowed selections can be chosen with equal probability;
  - set PRACH Mask Index to 0.
- determine the next available subframe containing PRACH permitted by the restrictions given by the *prach-ConfigIndex,* the PRACH Mask Index (see subclause 7.3) and physical layer timing requirements [2] (a UE may take into account the possible occurrence of measurement gaps when determining the next available PRACH subframe);
- if the transmission mode is TDD and the PRACH Mask Index is equal to zero:
  - if *ra-PreambleIndex* was explicitly signalled and it was not 000000 (i.e., not selected by MAC):

    - randomly select, with equal probability, one PRACH from the PRACHs available in the determined subframe.

  - else:

    - randomly select, with equal probability, one PRACH from the PRACHs available in the determined subframe and the next two consecutive subframes.

- else:

  - determine a PRACH within the determined subframe in accordance with the requirements of the PRACH Mask Index.

- proceed to the transmission of the Random Access Preamble (see subclause 5.1.3).

5.1.3 Random Access Preamble transmission

The random-access procedure shall be performed as follows:

- set PREAMBLE_RECEIVED_TARGET_POWER to *preambleInitialReceivedTargetPower* + DELTA_PREAMBLE + (PREAMBLE_TRANSMISSION_COUNTER – 1) * *powerRampingStep*;

- instruct the physical layer to transmit a preamble using the selected PRACH, corresponding RA-RNTI, preamble index and PREAMBLE_RECEIVED_TARGET_POWER.

5.1.4 Random Access Response reception

Once the Random Access Preamble is transmitted and regardless of the possible occurrence of a measurement gap, the UE shall monitor the PDCCH for Random Access Response(s) identified by the RA-RNTI defined below, in the RA Response window which starts at the subframe that contains the end of the preamble transmission [7] plus three subframes and has length *ra-ResponseWindowSize* subframes. The RA-RNTI associated with the PRACH in which the Random Access Preamble is transmitted, is computed as:

$$\text{RA-RNTI} = 1 + t_id + 10 * f_id$$

Where t_id is the index of the first subframe of the specified PRACH ($0 \leq t_id < 10$), and f_id is the index of the specified PRACH within that subframe, in ascending order of frequency domain ($0 \leq f_id < 6$). The UE may stop monitoring for Random Access Response(s) after successful reception of a Random Access Response containing Random Access Preamble identifiers that matches the transmitted Random Access Preamble.

- If a downlink assignment for this TTI has been received on the PDCCH for the RA-RNTI and the received TB is successfully decoded, the UE shall regardless of the possible occurrence of a measurement gap:

  - if the Random Access Response contains a Backoff Indicator subheader:

    - set the backoff parameter value in the UE as indicated by the BI field of the Backoff Indicator subheader and Table 7.2-1.

  - else, set the backoff parameter value in the UE to 0 ms.

  - if the Random Access Response contains a Random Access Preamble identifier corresponding to the transmitted Random Access Preamble (see subclause 5.1.3), the UE shall:

    - consider this Random Access Response reception successful;

    - process the received Timing Advance Command (see subclause 5.2);

    - indicate the *preambleInitialReceivedTargetPower* and the amount of power ramping applied to the latest preamble transmission to lower layers (i.e., (PREAMBLE_TRANSMISSION_COUNTER – 1) * *powerRampingStep*);

    - process the received UL grant value and indicate it to the lower layers;

    - if *ra-PreambleIndex* was explicitly signalled and it was not 000000 (i.e., not selected by MAC):

        - consider the Random Access procedure successfully completed.

    - else, if the Random Access Preamble was selected by UE MAC:

        - set the Temporary C-RNTI to the value received in the Random Access Response message no later than at the time of the first transmission corresponding to the UL grant provided in the Random Access Response message;

        - if this is the first successfully received Random Access Response within this Random Access procedure:

            - if the transmission is not being made for the CCCH logical channel, indicate to the Multiplexing and assembly entity to include a C-RNTI MAC control element in the subsequent uplink transmission;

            - obtain the MAC PDU to transmit from the "Multiplexing and assembly" entity and store it in the Msg3 buffer.

NOTE: When an uplink transmission is required, e.g., for contention resolution, the eNB should not provide a grant smaller than 56 bits in the Random Access Response.

NOTE: If within a Random Access procedure, an uplink grant provided in the Random Access Response for the same group of Random Access Preambles has a different size than the first uplink grant allocated during that Random Access procedure, the UE behavior is not defined.

If no Random Access Response is received within the RA Response window, or if none of all received Random Access Responses contains a Random Access Preamble identifier corresponding to the transmitted Random Access Preamble, the Random Access Response reception is considered not successful and the UE shall:

- increment PREAMBLE_TRANSMISSION_COUNTER by 1;

- If PREAMBLE_TRANSMISSION_COUNTER = *preambleTransMax* + 1:

    - indicate a Random Access problem to upper layers.

- if in this Random Access procedure, the Random Access Preamble was selected by MAC:

    - based on the backoff parameter in the UE, select a random backoff time according to a uniform distribution between 0 and the Backoff Parameter Value;

    - delay the subsequent Random Access transmission by the backoff time;

- proceed to the selection of a Random Access Resource (see subclause 5.1.2).

5.1.5 Contention Resolution

Contention Resolution is based on either C-RNTI on PDCCH or UE Contention Resolution Identity on DL-SCH.

Once Msg3 is transmitted, the UE shall:

- start *mac-ContentionResolutionTimer* and restart *mac-ContentionResolutionTimer* at each HARQ retransmission;

- regardless of the possible occurrence of a measurement gap, monitor the PDCCH until *mac-ContentionResolutionTimer* expires or is stopped;

- if notification of a reception of a PDCCH transmission is received from lower layers, the UE shall:

    - if the C-RNTI MAC control element was included in Msg3:

        - if the Random Access procedure was initiated by the MAC sublayer itself and the PDCCH transmission is addressed to the C-RNTI and contains an UL grant for a new transmission; or

        - if the Random Access procedure was initiated by a PDCCH order and the PDCCH transmission is addressed to the C-RNTI:

        - consider this Contention Resolution successful;
        - stop *mac-ContentionResolutionTimer*;
        - discard the Temporary C-RNTI;
        - consider this Random Access procedure successfully completed.
    - else if the CCCH SDU was included in Msg3 and the PDCCH transmission is addressed to its Temporary C-RNTI:
        - if the MAC PDU is successfully decoded:
            - stop *mac-ContentionResolutionTimer*;
            - if the MAC PDU contains a UE Contention Resolution Identity MAC control element; and
            - if the UE Contention Resolution Identity included in the MAC control element matches the CCCH SDU transmitted in Msg3:
                - consider this Contention Resolution successful and finish the disassembly and demultiplexing of the MAC PDU;
                - set the C-RNTI to the value of the Temporary C-RNTI;
                - discard the Temporary C-RNTI;
                - consider this Random Access procedure successfully completed.
            - else
                - discard the Temporary C-RNTI;
                - consider this Contention Resolution not successful and discard the successfully decoded MAC PDU.
- if *mac-ContentionResolutionTimer* expires:
    - discard the Temporary C-RNTI;
    - consider the Contention Resolution not successful.
- if the Contention Resolution is considered not successful the UE shall:
    - flush the HARQ buffer used for transmission of the MAC PDU in the Msg3 buffer;
    - increment PREAMBLE_TRANSMISSION_COUNTER by 1;
    - If PREAMBLE_TRANSMISSION_COUNTER = *preambleTransMax* + 1:
        - indicate a Random Access problem to upper layers.
    - based on the backoff parameter in the UE, select a random backoff time according to a uniform distribution between 0 and the Backoff Parameter Value;
    - delay the subsequent Random Access transmission by the backoff time;
    - proceed to the selection of a Random Access Resource (see subclause 5.1.2).

5.1.6 Completion of the Random Access procedure

At successful completion of the Random Access procedure, the UE shall:

- discard explicitly signalled *ra-PreambleIndex* and *ra-PRACH-MaskIndex*, if any;
- flush the HARQ buffer used for transmission of the MAC PDU in the Msg3 buffer.

5.2 Maintenance of Uplink Time Alignment

The UE has a configurable timer *timeAlignmentTimer* which is used to control how long the UE is considered uplink time aligned [8].

The UE shall:

- when a Timing Advance Command MAC control element is received:
  - apply the Timing Advance Command;
  - start or restart *timeAlignmentTimer*.
- when a Timing Advance Command is received in a Random Access Response message:
  - if the Random Access Preamble was not selected by UE MAC:
    - apply the Timing Advance Command;
    - start or restart *timeAlignmentTimer*.
  - else, if the *timeAlignmentTimer* is not running:
    - apply the Timing Advance Command;
    - start *timeAlignmentTimer*;
    - when the contention resolution is considered not successful as described in subclause 5.1.5, stop *timeAlignmentTimer.*
  - else:
    - ignore the received Timing Advance Command.
- when *timeAlignmentTimer* expires:
  - flush all HARQ buffers;
  - notify RRC to release PUCCH/SRS;
  - clear any configured downlink assignments and uplink grants.

5.3 DL-SCH data transfer

5.3.1 DL Assignment reception

Downlink assignments transmitted on the PDCCH indicate if there is a transmission on the DL-SCH for a particular UE and provide the relevant HARQ information.

When the UE has a C-RNTI, Semi-Persistent Scheduling C-RNTI, or Temporary C-RNTI, the UE shall for each TTI during which it monitors PDCCH:

- if a downlink assignment for this TTI has been received on the PDCCH for the UE's C-RNTI, or Temporary C-RNTI:
  - if this is the first downlink assignment for this Temporary C-RNTI:
    - consider the NDI to have been toggled.
  - if the downlink assignment is for UE's C-RNTI and if the previous downlink assignment indicated to the HARQ entity of the same HARQ process was either a downlink assignment received for the UE's Semi-Persistent Scheduling C-RNTI or a configured downlink assignment:
    - consider the NDI to have been toggled regardless of the value of the NDI.

    - indicate the presence of a downlink assignment and deliver the associated HARQ information to the HARQ entity for this TTI.

- else, if a downlink assignment for this TTI has been received on the PDCCH for the UE's Semi-Persistent Scheduling C-RNTI:
    - if the NDI in the received HARQ information is 1:
        - consider the NDI not to have been toggled;
        - indicate the presence of a downlink assignment and deliver the associated HARQ information to the HARQ entity for this TTI.
    - else, if the NDI in the received HARQ information is 0:
        - if PDCCH contents indicate SPS release:
            - clear the configured downlink assignment (if any);
            - if *timeAlignmentTimer* is running:
                - indicate a positive acknowledgement for the downlink SPS release to the physical layer.
        - else:
            - store the downlink assignment and the associated HARQ information as configured downlink assignment;
            - initialise (if not active) or re-initialise (if already active) the configured downlink assignment to start in this TTI and to recur according to rules in subclause 5.10.1;
            - set the HARQ Process ID to the HARQ Process ID associated with this TTI;
            - consider the NDI bit to have been toggled;
            - indicate the presence of a configured downlink assignment and deliver the stored HARQ information to the HARQ entity for this TTI.

- else, if a downlink assignment for this TTI has been configured and there is no measurement gap in this TTI and this TTI is not an MBSFN subframe:
    - instruct the physical layer to receive, in this TTI, transport block on the DL-SCH according to the configured downlink assignment and to deliver it to the HARQ entity;
    - set the HARQ Process ID to the HARQ Process ID associated with this TTI;
    - consider the NDI bit to have been toggled;
    - indicate the presence of a configured downlink assignment and deliver the stored HARQ information to the HARQ entity for this TTI.

For configured downlink assignments, the HARQ Process ID associated with this TTI is derived from the following equation:

HARQ Process ID = [floor(CURRENT_TTI/(Downlink Semi-Persistent Scheduling Interval))] modulo Number of Configured SPS Processes,

where CURRENT_TTI=[(SFN * 10) + subframe number], Downlink Semi-Persistent Scheduling Interval is the periodicity of semi-persistent scheduling signalled via RRC and Number of Configured SPS Processes is the number of HARQ processes allocated for semi-persistent scheduling signalled via RRC.

When the UE needs to read BCCH, the UE may, based on the scheduling information from RRC:

- if a downlink assignment for this TTI has been received on the PDCCH for the SI-RNTI;
    - if the redundancy version is not defined in the PDCCH format:

- the redundancy version of the received downlink assignment for this TTI is determined by RV_K = ceiling(3/2*k) modulo 4, where k depends on the type of system information message: for *SystemInformationBlockType1* message, k = (SFN/2) modulo 4, where SFN is the system frame number; for *SystemInformation* messages, $k=i$ modulo 4, i =0,1,…, n_s^w–1, where i denotes the subframe number within the SI window n_s^w;

- indicate a downlink assignment and redundancy version for the dedicated broadcast HARQ process to the HARQ entity for this TTI.

5.3.2 HARQ operation

5.3.2.1 HARQ Entity

There is one HARQ entity at the UE which maintains a number of parallel HARQ processes. Each HARQ process is associated with a HARQ process identifier. The HARQ entity directs HARQ information and associated TBs received on the DL-SCH to the corresponding HARQ processes (see subclause 5.3.2.2).

The number of DL HARQ processes is specified in [2], clause 7.

When the physical layer is configured for spatial multiplexing [2], one or two TBs are expected per subframe and they are associated with the same HARQ process. Otherwise, one TB is expected per subframe.

The UE shall:

- If a downlink assignment has been indicated for this TTI:
  - allocate the TB(s) received from the physical layer and the associated HARQ information to the HARQ process indicated by the associated HARQ information.
- If a downlink assignment has been indicated for the broadcast HARQ process:
  - allocate the received TB to the broadcast HARQ process.

NOTE: In case of BCCH a dedicated broadcast HARQ process is used.

5.3.2.2 HARQ process

For each subframe where a transmission takes place for the HARQ process, one or two (in case of spatial multiplexing) TBs and the associated HARQ information are received from the HARQ entity.

For each received TB and associated HARQ information, the HARQ process shall:

- if the NDI, when provided, has been toggled compared to the value of the previous received transmission corresponding to this TB; or
- if the HARQ process is equal to the broadcast process and if this is the first received transmission for the TB according to the system information schedule indicated by RRC; or
- if this is the very first received transmission for this TB (i.e. there is no previous NDI for this TB):
  - consider this transmission to be a new transmission.
- else:
  - consider this transmission to be a retransmission.

The UE then shall:

- if this is a new transmission:
  - replace the data currently in the soft buffer for this TB with the received data.
- else if this is a retransmission:
  - if the data has not yet been successfully decoded:

        - combine the received data with the data currently in the soft buffer for this TB.
    - if the TB size is different from the last valid TB size signalled for this TB:
        - the UE may replace the data currently in the soft buffer for this TB with the received data.
- attempt to decode the data in the soft buffer for this TB;
- if the data in the soft buffer was successfully decoded for this TB:
    - if the HARQ process is equal to the broadcast process:
        - deliver the decoded MAC PDU to upper layers.
    - else if this is the first successful decoding of the data in the soft buffer for this TB:
        - deliver the decoded MAC PDU to the disassembly and demultiplexing entity.
    - generate a positive acknowledgement (ACK) of the data in this TB.
- else:
    - generate a negative acknowledgement (NACK) of the data in this TB.
- if the HARQ process is associated with a transmission indicated with a Temporary C-RNTI and the Contention Resolution is not yet successful (see subclause 5.1.5); or
- if the HARQ process is equal to the broadcast process; or
- if *timeAlignmentTimer* is stopped or expired:
    - do not indicate the generated positive or negative acknowledgement to the physical layer.
- else:
    - indicate the generated positive or negative acknowledgement for this TB to the physical layer.

The UE shall ignore NDI received in all downlink assignments on PDCCH for its Temporary C-RNTI when determining if NDI on PDCCH for its C-RNTI has been toggled compared to the value in the previous transmission.

5.3.3 Disassembly and demultiplexing

The UE shall disassemble and demultiplex a MAC PDU as defined in subclause 6.1.2.

5.4 UL-SCH data transfer

5.4.1 UL Grant reception

In order to transmit on the UL-SCH the UE must have a valid uplink grant (except for non-adaptive HARQ retransmissions) which it may receive dynamically on the PDCCH or in a Random Access Response or which may be configured semi-persistently. To perform requested transmissions, the MAC layer receives HARQ information from lower layers.

When *timeAlignmentTimer* is running and the UE has a C-RNTI, Semi-Persistent Scheduling C-RNTI, or Temporary C-RNTI, the UE shall for each TTI :

- if an uplink grant for this TTI has been received on the PDCCH for the UE's C-RNTI or Temporary C-RNTI; or
- if an uplink grant for this TTI has been received in a Random Access Response:
    - if the uplink grant is for UE's C-RNTI and if the previous uplink grant delivered to the HARQ entity for the same HARQ process was either an uplink grant received for the UE's Semi-Persistent Scheduling C-RNTI or a configured uplink grant:

        - consider the NDI to have been toggled regardless of the value of the NDI.
    - deliver the uplink grant and the associated HARQ information to the HARQ entity for this TTI.
- else, if an uplink grant for this TTI has been received on the PDCCH for the UE's Semi-Persistent Scheduling C-RNTI:
    - if the NDI in the received HARQ information is 1:
        - consider the NDI not to have been toggled;
        - deliver the uplink grant and the associated HARQ information to the HARQ entity for this TTI.
    - else if the NDI in the received HARQ information is 0:
        - if PDCCH contents indicate SPS release:
            - clear the configured uplink grant (if any).
        - else:
            - store the uplink grant and the associated HARQ information as configured uplink grant;
            - initialise (if not active) or re-initialise (if already active) the configured uplink grant to start in this TTI and to recur according to rules in subclause 5.10.2;
            - consider the NDI bit to have been toggled;
            - deliver the configured uplink grant and the associated HARQ information to the HARQ entity for this TTI.
- else, if an uplink grant for this TTI has been configured:
    - consider the NDI bit to have been toggled;
    - deliver the configured uplink grant, and the associated HARQ information to the HARQ entity for this TTI.

NOTE: The period of configured uplink grants is expressed in TTIs.

NOTE: If the UE receives both a grant in a Random Access Response and a grant for its C-RNTI or Semi persistent scheduling C-RNTI requiring transmissions in the same UL subframe, the UE may choose to continue with either the grant for its RA-RNTI or the grant for its C-RNTI or Semi persistent scheduling C-RNTI.

NOTE: When a configured uplink grant is indicated during a measurement gap and indicates an UL-SCH transmission during a measurement gap, the UE processes the grant but does not transmit on UL-SCH.

5.4.2 HARQ operation

5.4.2.1 HARQ entity

There is one HARQ entity at the UE, which maintains a number of parallel HARQ processes allowing transmissions to take place continuously while waiting for HARQ the feedback on the successful or unsuccessful reception of previous transmissions.

The number of parallel HARQ processes is specified in [2], clause 8.

At a given TTI, if an uplink grant is indicated for the TTI, the HARQ entity identifies the HARQ process for which a transmission should take place. It also routes the received HARQ feedback (ACK/NACK information), MCS and resource, relayed by the physical layer, to the appropriate HARQ process.

When TTI bundling is configured, the parameter TTI_BUNDLE_SIZE provides the number of TTIs of a TTI bundle. TTI bundling operation relies on the HARQ entity for invoking the same HARQ process for each transmission that is part of the same bundle. Within a bundle HARQ retransmissions are non-adaptive and triggered without waiting for feedback from previous transmissions according to TTI_BUNDLE_SIZE. The HARQ feedback of a bundle is only

received for the last TTI of the bundle (i.e the TTI corresponding to TTI_BUNDLE_SIZE), regardless of whether a transmission in that TTI takes place or not (e.g. when a measurement gap occurs). A retransmission of a TTI bundle is also a TTI bundle.

For transmission of Msg3 during Random Access (see section 5.1.5) TTI bundling does not apply.

For each TTI, the HARQ entity shall:

- identify the HARQ process associated with this TTI;
- if an uplink grant has been indicated for this TTI:
  - if the received grant was not addressed to a Temporary C-RNTI on PDCCH and if the NDI provided in the associated HARQ information has been toggled compared to the value in the previous transmission of this HARQ process; or
  - if the uplink grant was received on PDCCH for the C-RNTI and the HARQ buffer of the identified process is empty; or
  - if the uplink grant was received in a Random Access Response:
    - if there is a MAC PDU in the Msg3 buffer and the uplink grant was received in a Random Access Response:
      - obtain the MAC PDU to transmit from the Msg3 buffer.
    - else:
      - obtain the MAC PDU to transmit from the "Multiplexing and assembly" entity;
    - deliver the MAC PDU and the uplink grant and the HARQ information to the identified HARQ process;
    - instruct the identified HARQ process to trigger a new transmission.
  - else:
    - deliver the uplink grant and the HARQ information (redundancy version) to the identified HARQ process;
    - instruct the identified HARQ process to generate an adaptive retransmission.
- else, if the HARQ buffer of the HARQ process corresponding to this TTI is not empty:
  - instruct the identified HARQ process to generate a non-adaptive retransmission.

When determining if NDI has been toggled compared to the value in the previous transmission UE shall ignore NDI received in all uplink grants on PDCCH for its Temporary C-RNTI.

5.4.2.2 HARQ process

Each HARQ process is associated with a HARQ buffer.

Each HARQ process shall maintain a state variable CURRENT_TX_NB, which indicates the number of transmissions that have taken place for the MAC PDU currently in the buffer, and a state variable HARQ_FEEDBACK, which indicates the HARQ feedback for the MAC PDU currently in the buffer. When the HARQ process is established, CURRENT_TX_NB shall be initialized to 0.

The sequence of redundancy versions is 0, 2, 3, 1. The variable CURRENT_IRV is an index into the sequence of redundancy versions. This variable is up-dated modulo 4.

New transmissions are performed on the resource and with the MCS indicated on PDCCH or Random Access Response. Adaptive retransmissions are performed on the resource and, if provided, with the MCS indicated on PDCCH. Non-adaptive retransmission is performed on the same resource and with the same MCS as was used for the last made transmission attempt.

The UE is configured with a Maximum number of HARQ transmissions and a Maximum number of Msg3 HARQ transmissions by RRC: *maxHARQ-Tx* and *maxHARQ-Msg3Tx* respectively. For transmissions on all HARQ processes and all logical channels except for transmission of a MAC PDU stored in the Msg3 buffer, the maximum number of transmissions shall be set to *maxHARQ-Tx*. For transmission of a MAC PDU stored in the Msg3 buffer, the maximum number of transmissions shall be set to *maxHARQ-Msg3Tx*.

When the HARQ feedback is received for this TB, the HARQ process shall:

- set HARQ_FEEDBACK to the received value.

If the HARQ entity requests a new transmission, the HARQ process shall:

- set CURRENT_TX_NB to 0;
- set CURRENT_IRV to 0;
- store the MAC PDU in the associated HARQ buffer;
- store the uplink grant received from the HARQ entity;
- set HARQ_FEEDBACK to NACK;
- generate a transmission as described below.

If the HARQ entity requests a retransmission, the HARQ process shall:

- increment CURRENT_TX_NB by 1;
- if the HARQ entity requests an adaptive retransmission:
  - store the uplink grant received from the HARQ entity;
  - set CURRENT_IRV to the index corresponding to the redundancy version value provided in the HARQ information;
  - set HARQ_FEEDBACK to NACK;
  - generate a transmission as described below.
- else if the HARQ entity requests a non-adaptive retransmission:
  - if HARQ_FEEDBACK = NACK:
    - generate a transmission as described below.

NOTE: When receiving a HARQ ACK alone, the UE keeps the data in the HARQ buffer.

NOTE: When no UL-SCH transmission can be made due to the occurrence of a measurement gap, no HARQ feedback can be received and a non-adaptive retransmission follows.

To generate a transmission, the HARQ process shall:

- if the MAC PDU was obtained from the Msg3 buffer; or
- if there is no measurement gap at the time of the transmission and, in case of retransmission, the retransmission does not collide with a transmission for a MAC PDU obtained from the Msg3 buffer in this TTI:
  - instruct the physical layer to generate a transmission according to the stored uplink grant with the redundancy version corresponding to the CURRENT_IRV value;

- increment CURRENT_IRV by 1;
- if there is a measurement gap at the time of the HARQ feedback reception for this transmission and if the MAC PDU was not obtained from the Msg3 buffer:
  - set HARQ_FEEDBACK to ACK at the time of the HARQ feedback reception for this transmission.

After performing above actions, the HARQ process then shall:

- if CURRENT_TX_NB = maximum number of transmissions – 1:
  - flush the HARQ buffer;

5.4.3 Multiplexing and assembly

5.4.3.1 Logical channel prioritization

The Logical Channel Prioritization procedure is applied when a new transmission is performed.

RRC controls the scheduling of uplink data by signalling for each logical channel: *priority* where an increasing *priority* value indicates a lower priority level, *prioritisedBitRate* which sets the Prioritized Bit Rate (PBR), *bucketSizeDuration* which sets the Bucket Size Duration (BSD).

The UE shall maintain a variable Bj for each logical channel j. Bj shall be initialized to zero when the related logical channel is established, and incremented by the product PBR × TTI duration for each TTI, where PBR is Prioritized Bit Rate of logical channel j. However, the value of Bj can never exceed the bucket size and if the value of Bj is larger than the bucket size of logical channel j, it shall be set to the bucket size. The bucket size of a logical channel is equal to PBR × BSD, where PBR and BSD are configured by upper layers.

The UE shall perform the following Logical Channel Prioritization procedure when a new transmission is performed:

- The UE shall allocate resources to the logical channels in the following steps:
  - Step 1: All the logical channels with Bj > 0 are allocated resources in a decreasing priority order. If the PBR of a radio bearer is set to “infinity”, the UE shall allocate resources for all the data that is available for transmission on the radio bearer before meeting the PBR of the lower priority radio bearer(s);
  - Step 2: the UE shall decrement Bj by the total size of MAC SDUs served to logical channel j in Step 1

NOTE: The value of Bj can be negative.

  - Step 3: if any resources remain, all the logical channels are served in a strict decreasing priority order (regardless of the value of Bj) until either the data for that logical channel or the UL grant is exhausted, whichever comes first. Logical channels configured with equal priority should be served equally.
- The UE shall also follow the rules below during the scheduling procedures above:
  - the UE should not segment an RLC SDU (or partially transmitted SDU or retransmitted RLC PDU) if the whole SDU (or partially transmitted SDU or retransmitted RLC PDU) fits into the remaining resources;
  - if the UE segments an RLC SDU from the logical channel, it shall maximize the size of the segment to fill the grant as much as possible;
  - UE should maximise the transmission of data.

The UE shall not transmit data for a logical channel corresponding to a radio bearer that is suspended (the conditions for when a radio bearer is considered suspended are defined in [8]).

For the Logical Channel Prioritization procedure, the UE shall take into account the following relative priority in decreasing order:

- MAC control element for C-RNTI or data from UL-CCCH;
- MAC control element for BSR, with exception of BSR included for padding;
- MAC control element for PHR;
- data from any Logical Channel, except data from UL-CCCH;
- MAC control element for BSR included for padding.

5.4.3.2 Multiplexing of MAC Control Elements and MAC SDUs

The UE shall multiplex MAC control elements and MAC SDUs in a MAC PDU according to subclauses 5.4.3.1 and 6.1.2.

5.4.4 Scheduling Request

The Scheduling Request (SR) is used for requesting UL-SCH resources for new transmission.

When an SR is triggered, it shall be considered as pending until it is cancelled.

If an SR is triggered and there is no other SR pending, the UE shall set the SR_COUNTER to 0.

As long as one SR is pending, the UE shall for each TTI:

- if no UL-SCH resources are available for a transmission in this TTI:
  - if the UE has no valid PUCCH resource for SR configured in any TTI: initiate a Random Access procedure (see subclause 5.1) and cancel all pending SRs;
  - else if the UE has a valid PUCCH resource for SR configured for this TTI and if this TTI is not part of a measurement gap:
    - if SR_COUNTER < *dsr-TransMax*:
      - increment SR_COUNTER by 1;
      - instruct the physical layer to signal the SR on PUCCH;
    - else:
      - notify RRC to release PUCCH/SRS;
      - clear any configured downlink assignments and uplink grants;
      - initiate a Random Access procedure (see subclause 5.1) and cancel all pending SRs.
- else if UL-SCH resources are available for a new transmission in this TTI, cancel all pending SR(s).

5.4.5 Buffer Status Reporting

The Buffer Status reporting procedure is used to provide the serving eNB with information about the amount of data available for transmission in the UL buffers of the UE. RRC controls BSR reporting by configuring the two timers *periodicBSR-Timer* and *retxBSR-Timer* and by, for each logical channel, optionally signalling *logicalChannelGroup* which allocates the logical channel to an LCG [8].

For the Buffer Status reporting procedure, the UE shall consider all radio bearers which are not suspended and may consider radio bearers which are suspended.

A Buffer Status Report (BSR) shall be triggered if any of the following events occur:

- UL data, for a logical channel which belongs to a LCG, becomes available for transmission in the RLC entity or in the PDCP entity (the definition of what data shall be considered as available for transmission is specified in [3] and [4] respectively) and either the data belongs to a logical channel with higher priority than the priorities of the logical channels which belong to any LCG and for which data is already available for transmission, or there

is no data available for transmission for any of the logical channels which belong to a LCG, in which case the BSR is referred below to as "Regular BSR";

- UL resources are allocated and number of padding bits is equal to or larger than the size of the Buffer Status Report MAC control element plus its subheader, in which case the BSR is referred below to as "Padding BSR";
- *retxBSR-Timer* expires and the UE has data available for transmission for any of the logical channels which belong to a LCG, in which case the BSR is referred below to as "Regular BSR";
- *periodicBSR-Timer* expires, in which case the BSR is referred below to as "Periodic BSR".

For Regular and Periodic BSR:

- if more than one LCG has data available for transmission in the TTI where the BSR is transmitted: report Long BSR;
- else report Short BSR.

For Padding BSR:

- if the number of padding bits is equal to or larger than the size of the Short BSR plus its subheader but smaller than the size of the Long BSR plus its subheader:
  - if more than one LCG has data available for transmission in the TTI where the BSR is transmitted: report Truncated BSR of the LCG with the highest priority logical channel with data available for transmission;
  - else report Short BSR.
- else if the number of padding bits is equal to or larger than the size of the Long BSR plus its subheader, report Long BSR.

If the Buffer Status reporting procedure determines that at least one BSR has been triggered and not cancelled:

- if the UE has UL resources allocated for new transmission for this TTI:
  - instruct the Multiplexing and Assembly procedure to generate a BSR MAC control element;
  - start or restart *periodicBSR-Timer* except when the BSR is a Truncated BSR;
  - start or restart *retxBSR-Timer*.
- else if a Regular BSR has been triggered:
  - a Scheduling Request shall be triggered.

A MAC PDU shall contain at most one MAC BSR control element, even when multiple events trigger a BSR by the time a BSR can be transmitted in which case the Regular BSR and the Periodic BSR shall have precedence over the padding BSR.

The UE shall restart *retxBSR-Timer* upon indication of a grant for transmission of new data on UL-SCH.

All triggered BSRs shall be cancelled in case the UL grant can accommodate all pending data available for transmission but is not sufficient to additionally accommodate the BSR MAC control element plus its subheader. All triggered BSRs shall be cancelled when a BSR is included in a MAC PDU for transmission.

5.4.6 Power Headroom Reporting

The Power Headroom reporting procedure is used to provide the serving eNB with information about the difference between the nominal UE maximum transmit power and the estimated power for UL-SCH transmission. The reporting period, delay and mapping of Power Headroom are defined in subclause 9.1.8 of [9]. RRC controls Power Headroom reporting by configuring the two timers *periodicPHR-Timer* and *prohibitPHR-Timer*, and by signalling *dl-PathlossChange* which sets the change in measured downlink pathloss to trigger a PHR [8].

A Power Headroom Report (PHR) shall be triggered if any of the following events occur:

- *prohibitPHR-Timer* expires or has expired and the path loss has changed more than *dl-PathlossChange* dB since the transmission of a PHR when UE has UL resources for new transmission;
- *periodicPHR-Timer* expires;
- upon configuration or reconfiguration of the power headroom reporting functionality by upper layers [8], which is not used to disable the function.

If the UE has UL resources allocated for new transmission for this TTI:

- if it is the first UL resource allocated for a new transmission since the last MAC reset, start *periodicPHR-Timer*;
- if the Power Headroom reporting procedure determines that at least one PHR has been triggered since the last transmission of a PHR or this is the first time that a PHR is triggered, and;
- if the allocated UL resources can accommodate a PHR MAC control element plus its subheader as a result of logical channel prioritization:
  - obtain the value of the power headroom from the physical layer;
  - instruct the Multiplexing and Assembly procedure to generate and transmit a PHR MAC control element based on the value reported by the physical layer;
  - start or restart *periodicPHR-Timer*;
  - start or restart *prohibitPHR-Timer*;
  - cancel all triggered PHR(s).

5.5 PCH reception

When the UE needs to receive PCH, the UE shall:

- if a PCH assignment has been received on the PDCCH for the P-RNTI:
  - attempt to decode the TB on the PCH as indicated by the PDCCH information.
- if a TB on the PCH has been successfully decoded:
  - deliver the decoded MAC PDU to upper layers.

5.6 BCH reception

When the UE needs to receive BCH, the UE shall:

- receive and attempt to decode the BCH;
- if a TB on the BCH has been successfully decoded:
  - deliver the decoded MAC PDU to upper layers.

5.7 Discontinuous Reception (DRX)

The UE may be configured by RRC with a DRX functionality that controls the UE's PDCCH monitoring activity for the UE's C-RNTI, TPC-PUCCH-RNTI, TPC-PUSCH-RNTI and Semi-Persistent Scheduling C-RNTI (if configured). When in RRC_CONNECTED, if DRX is configured, the UE is allowed to monitor the PDCCH discontinuously using the DRX operation specified in this subclause; otherwise the UE monitors the PDCCH continuously. When using DRX operation, the UE shall also monitor PDCCH according to requirements found in other subclauses of this specification. RRC controls DRX operation by configuring the timers *onDurationTimer*, *drx-InactivityTimer*, *drx-RetransmissionTimer* (one per DL HARQ process except for the broadcast process), the *longDRX-Cycle*, the value of the *drxStartOffset* and optionally the *drxShortCycleTimer* and *shortDRX-Cycle*. A HARQ RTT timer per DL HARQ process (except for the broadcast process) is also defined (see subclause 7.7).

When a DRX cycle is configured, the Active Time includes the time while:

- *onDurationTimer* or *drx-InactivityTimer* or *drx-RetransmissionTimer* or *mac-ContentionResolutionTimer* (as described in subclause 5.1.5) is running; or
- a Scheduling Request sent on PUCCH is pending (as described in subclause 5.4.4); or
- an uplink grant for a pending HARQ retransmission can occur and there is data in the corresponding HARQ buffer; or
- a PDCCH indicating a new transmission addressed to the C-RNTI of the UE has not been received after successful reception of a Random Access Response for the preamble not selected by the UE (as described in subclause 5.1.4).

When DRX is configured, the UE shall for each subframe:

- If the Short DRX Cycle is used and [(SFN * 10) + subframe number] modulo (*shortDRX-Cycle*) = (*drxStartOffset*) modulo (*shortDRX-Cycle*); or
- if the Long DRX Cycle is used and [(SFN * 10) + subframe number] modulo (*longDRX-Cycle*) = *drxStartOffset*:
  - start *onDurationTimer*.
- if a HARQ RTT Timer expires in this subframe and the data in the soft buffer of the corresponding HARQ process was not successfully decoded:
  - start the *drx-RetransmissionTimer* for the corresponding HARQ process.
- if a DRX Command MAC control element is received:
  - stop *onDurationTimer*;
  - stop *drx-InactivityTimer*.
- if *drx-InactivityTimer* expires or a DRX Command MAC control element is received in this subframe:
  - if the Short DRX cycle is configured:
    - start or restart *drxShortCycleTimer*;
    - use the Short DRX Cycle.
  - else:
    - use the Long DRX cycle.
- if *drxShortCycleTimer* expires in this subframe:
  - use the Long DRX cycle.
- during the Active Time, for a PDCCH-subframe, if the subframe is not required for uplink transmission for half-duplex FDD UE operation and if the subframe is not part of a configured measurement gap:
  - monitor the PDCCH;
  - if the PDCCH indicates a DL transmission or if a DL assignment has been configured for this subframe:
    - start the HARQ RTT Timer for the corresponding HARQ process;
    - stop the *drx-RetransmissionTimer* for the corresponding HARQ process.
  - if the PDCCH indicates a new transmission (DL or UL):
    - start or restart *drx-InactivityTimer*.
- when not in Active Time, CQI/PMI/RI on PUCCH and SRS shall not be reported.

Regardless of whether the UE is monitoring PDCCH or not the UE receives and transmits HARQ feedback when such is expected.

NOTE: A UE may optionally choose to not send CQI/PMI/RI reports on PUCCH and/or SRS transmissions for up to 4 subframes following a PDCCH indicating a new transmission (UL or DL) received in the last subframe of active time. The choice not to send CQI/PMI/RI reports on PUCCH and/or SRS transmissions is not applicable for subframes where *onDurationTimer* is running.

5.8 MAC reconfiguration

When a reconfiguration of the MAC entity is requested by upper layers, the UE shall:

- for timers apply the new value when the timer is (re)started;
- when counters are initialized apply the new maximum parameter value;
- for other parameters, apply immediately the configurations received from upper layers.

5.9 MAC Reset

If a reset of the MAC entity is requested by upper layers, the UE shall:

- initialize Bj for each logical channel to zero;
- stop (if running) all timers;
- consider *timeAlignmentTimer* as expired and perform the corresponding actions in subclause 5.2;
- set the NDIs for all uplink HARQ processes to the value 0;
- stop, if any, ongoing RACH procedure;
- discard explicitly signalled *ra-PreambleIndex* and *ra-PRACH-MaskIndex*, if any;
- flush Msg3 buffer;
- cancel, if any, triggered Scheduling Request procedure;
- cancel, if any, triggered Buffer Status Reporting procedure;
- cancel, if any, triggered Power Headroom Reporting procedure;
- flush the soft buffers for all DL HARQ processes;
- for each DL HARQ process, consider the next received transmission for a TB as the very first transmission;
- release, if any, Temporary C-RNTI.

5.10 Semi-Persistent Scheduling

When Semi-Persistent Scheduling is enabled by RRC, the following information is provided [8]:

- Semi-Persistent Scheduling C-RNTI;
- Uplink Semi-Persistent Scheduling interval *semiPersistSchedIntervalUL* and number of empty transmissions before implicit release *implicitReleaseAfter*, if Semi-Persistent Scheduling is enabled for the uplink;
- Whether *twoIntervalsConfig* is enabled or disabled for uplink, only for TDD;
- Downlink Semi-Persistent Scheduling interval *semiPersistSchedIntervalDL* and number of configured HARQ processes for Semi-Persistent Scheduling *numberOfConfSPS-Processes*, if Semi-Persistent Scheduling is enabled for the downlink;

When Semi-Persistent Scheduling for uplink or downlink is disabled by RRC, the corresponding configured grant or configured assignment shall be discarded.

5.10.1 Downlink

After a Semi-Persistent downlink assignment is configured, the UE shall consider that the assignment recurs in each subframe for which:

- (10 * SFN + subframe) = [(10 * $SFN_{start\ time}$ + $subframe_{start\ time}$) + N * *semiPersistSchedIntervalDL*] modulo 10240, for all N>0.

Where $SFN_{start\ time}$ and $subframe_{start\ time}$ are the SFN and subframe, respectively, at the time the configured downlink assignment were (re-)initialised.

5.10.2 Uplink

After a Semi-Persistent Scheduling uplink grant is configured, the UE shall:

- if *twoIntervalsConfig* is enabled by upper layer:
  - set the Subframe_Offset according to Table 7.4-1.
- else:
  - set Subframe_Offset to 0.
- consider that the grant recurs in each subframe for which:
  - (10 * SFN + subframe) = [(10 * $SFN_{start\ time}$ + $subframe_{start\ time}$) + N * *semiPersistSchedIntervalUL* + Subframe_Offset * (N modulo 2)] modulo 10240, for all N>0.

Where $SFN_{start\ time}$ and $subframe_{start\ time}$ are the SFN and subframe, respectively, at the time the configured uplink grant were (re-)initialised.

The UE shall clear the configured uplink grant immediately after *implicitReleaseAfter* [8] number of consecutive new MAC PDUs each containing zero MAC SDUs have been provided by the Multiplexing and Assembly entity, on the Semi-Persistent Scheduling resource.

NOTE: Retransmissions for Semi-Persistent Scheduling can continue after clearing the configured uplink grant.

5.11 Handling of unknown, unforeseen and erroneous protocol data

When a MAC entity receives a MAC PDU for the UE's C-RNTI or Semi-Persistent Scheduling C-RNTI, or by the configured downlink assignment, containing reserved or invalid values, the MAC entity shall:

- discard the received PDU.

6 Protocol Data Units, formats and parameters

6.1 Protocol Data Units

6.1.1 General

A MAC PDU is a bit string that is byte aligned (i.e. multiple of 8 bits) in length. In the figures in subclause 6.1, bit strings are represented by tables in which the most significant bit is the leftmost bit of the first line of the table, the least significant bit is the rightmost bit on the last line of the table, and more generally the bit string is to be read from left to

right and then in the reading order of the lines. The bit order of each parameter field within a MAC PDU is represented with the first and most significant bit in the leftmost bit and the last and least significant bit in the rightmost bit.

MAC SDUs are bit strings that are byte aligned (i.e. multiple of 8 bits) in length. An SDU is included into a MAC PDU from the first bit onward.

The UE shall ignore the value of Reserved bits in downlink MAC PDUs.

6.1.2 MAC PDU (DL-SCH and UL-SCH except transparent MAC and Random Access Response)

A MAC PDU consists of a MAC header, zero or more MAC Service Data Units (MAC SDU), zero, or more MAC control elements, and optionally padding; as described in Figure 6.1.2-3.

Both the MAC header and the MAC SDUs are of variable sizes.

A MAC PDU header consists of one or more MAC PDU subheaders; each subheader corresponds to either a MAC SDU, a MAC control element or padding.

A MAC PDU subheader consists of the six header fields R/R/E/LCID/F/L but for the last subheader in the MAC PDU and for fixed sized MAC control elements. The last subheader in the MAC PDU and subheaders for fixed sized MAC control elements consist solely of the four header fields R/R/E/LCID. A MAC PDU subheader corresponding to padding consists of the four header fields R/R/E/LCID.

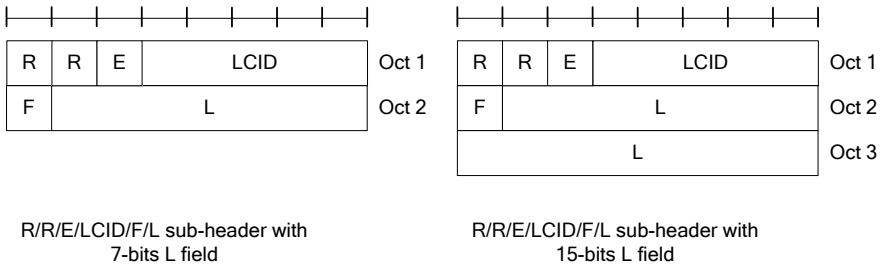

Figure 6.1.2-1: R/R/E/LCID/F/L MAC subheader

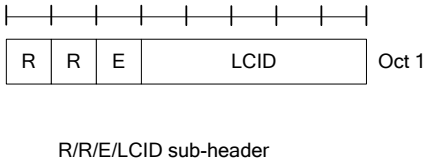

Figure 6.1.2-2: R/R/E/LCID MAC subheader

MAC PDU subheaders have the same order as the corresponding MAC SDUs, MAC control elements and padding.

MAC control elements are always placed before any MAC SDU.

Padding occurs at the end of the MAC PDU, except when single-byte or two-byte padding is required. Padding may have any value and the UE shall ignore it. When padding is performed at the end of the MAC PDU, zero or more padding bytes are allowed.

When single-byte or two-byte padding is required, one or two MAC PDU subheaders corresponding to padding are placed at the beginning of the MAC PDU before any other MAC PDU subheader.

A maximum of one MAC PDU can be transmitted per TB per UE.

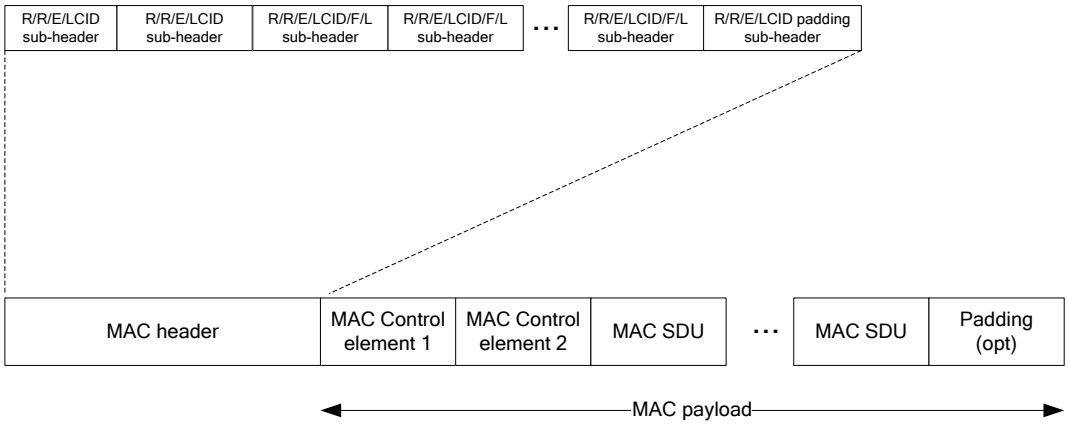

Figure 6.1.2-3: Example of MAC PDU consisting of MAC header, MAC control elements, MAC SDUs and padding

6.1.3 MAC Control Elements

6.1.3.1 Buffer Status Report MAC Control Elements

Buffer Status Report (BSR) MAC control elements consist of either:

- Short BSR and Truncated BSR format: one LCG ID field and one corresponding Buffer Size field (figure 6.1.3.1-1); or
- Long BSR format: four Buffer Size fields, corresponding to LCG IDs #0 through #3 (figure 6.1.3.1-2).

The BSR formats are identified by MAC PDU subheaders with LCIDs as specified in table 6.2.1-2.

The fields LCG ID and Buffer Size are defined as follow:

- LCG ID: The Logical Channel Group ID field identifies the group of logical channel(s) which buffer status is being reported. The length of the field is 2 bits;
- Buffer Size: The Buffer Size field identifies the total amount of data available across all logical channels of a logical channel group after the MAC PDU has been built. The amount of data is indicated in number of bytes. It shall include all data that is available for transmission in the RLC layer and in the PDCP layer; the definition of what data shall be considered as available for transmission is specified in [3] and [4] respectively. The size of the RLC and MAC headers are not considered in the buffer size computation. The length of this field is 6 bits. The values taken by the Buffer Size field are shown in Table 6.1.3.1-1.

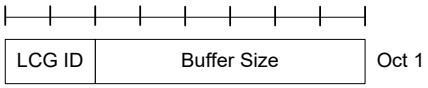

Figure 6.1.3.1-1: Short BSR and Truncated BSR MAC control element

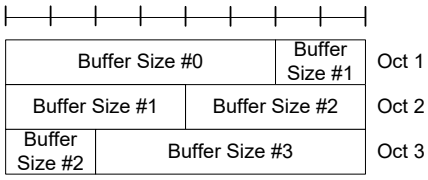

Figure 6.1.3.1-2: Long BSR MAC control element

Table 6.1.3.1-1: Buffer size levels for BSR

Index	Buffer Size (BS) value [bytes]	Index	Buffer Size (BS) value [bytes]
0	BS = 0	32	1132 < BS <= 1326
1	0 < BS <= 10	33	1326 < BS <= 1552
2	10 < BS <= 12	34	1552 < BS <= 1817
3	12 < BS <= 14	35	1817 < BS <= 2127
4	14 < BS <= 17	36	2127 < BS <= 2490
5	17 < BS <= 19	37	2490 < BS <= 2915
6	19 < BS <= 22	38	2915 < BS <= 3413
7	22 < BS <= 26	39	3413 < BS <= 3995
8	26 < BS <= 31	40	3995 < BS <= 4677
9	31 < BS <= 36	41	4677 < BS <= 5476
10	36 < BS <= 42	42	5476 < BS <= 6411
11	42 < BS <= 49	43	6411 < BS <= 7505
12	49 < BS <= 57	44	7505 < BS <= 8787
13	57 < BS <= 67	45	8787 < BS <= 10287
14	67 < BS <= 78	46	10287 < BS <= 12043
15	78 < BS <= 91	47	12043 < BS <= 14099
16	91 < BS <= 107	48	14099 < BS <= 16507
17	107 < BS <= 125	49	16507 < BS <= 19325
18	125 < BS <= 146	50	19325 < BS <= 22624
19	146 < BS <= 171	51	22624 < BS <= 26487
20	171 < BS <= 200	52	26487 < BS <= 31009
21	200 < BS <= 234	53	31009 < BS <= 36304
22	234 < BS <= 274	54	36304 < BS <= 42502
23	274 < BS <= 321	55	42502 < BS <= 49759
24	321 < BS <= 376	56	49759 < BS <= 58255
25	376 < BS <= 440	57	58255 < BS <= 68201
26	440 < BS <= 515	58	68201 < BS <= 79846
27	515 < BS <= 603	59	79846 < BS <= 93479
28	603 < BS <= 706	60	93479 < BS <= 109439
29	706 < BS <= 826	61	109439 < BS <= 128125
30	826 < BS <= 967	62	128125 < BS <= 150000
31	967 < BS <=1132	63	BS > 150000

6.1.3.2 C-RNTI MAC Control Element

The C-RNTI MAC control element is identified by MAC PDU subheader with LCID as specified in table 6.2.1-2.

It has a fixed size and consists of a single field defined as follows (figure 6.1.3.2-1):

- C-RNTI: This field contains the C-RNTI of the UE. The length of the field is 16 bits.

C-RNTI	Oct 1
C-RNTI	Oct 2

Figure 6.1.3.2-1: C-RNTI MAC control element

6.1.3.3 DRX Command MAC Control Element

The DRX Command MAC control element is identified by a MAC PDU subheader with LCID as specified in table 6.2.1-1.

It has a fixed size of zero bits.

6.1.3.4 UE Contention Resolution Identity MAC Control Element

The UE Contention Resolution Identity MAC control element is identified by MAC PDU subheader with LCID as specified in table 6.2.1-1. This control element has a fixed 48-bit size and consists of a single field defined as follows (figure 6.1.3.4-1)

- UE Contention Resolution Identity: This field contains the uplink CCCH SDU.

UE Contention Resolution Identity	Oct 1
UE Contention Resolution Identity	Oct 2
UE Contention Resolution Identity	Oct 3
UE Contention Resolution Identity	Oct 4
UE Contention Resolution Identity	Oct 5
UE Contention Resolution Identity	Oct 6

Figure 6.1.3.4-1: UE Contention Resolution Identity MAC control element

6.1.3.5 Timing Advance Command MAC Control Element

The Timing Advance Command MAC control element is identified by MAC PDU subheader with LCID as specified in table 6.2.1-1.

It has a fixed size and consists of a single octet defined as follows (figure 6.1.3.5-1):

- R: reserved bit, set to "0";
- Timing Advance Command: This field indicates the index value T_A (0, 1, 2… 63) used to control the amount of timing adjustment that UE has to apply (see subclause 4.2.3 of [2]). The length of the field is 6 bits.

R	R	Timing Advance Command	Oct 1

Figure 6.1.3.5-1: Timing Advance Command MAC control element

6.1.3.6 Power Headroom MAC Control Element

The Power Headroom MAC control element is identified by a MAC PDU subheader with LCID as specified in table 6.2.1-2. It has a fixed size and consists of a single octet defined as follows (figure 6.1.3.6-1):

- R: reserved bit, set to "0";

- Power Headroom (PH): this field indicates the power headroom level. The length of the field is 6 bits. The reported PH and the corresponding power headroom levels are shown in Table 6.1.3.6-1 below (the corresponding measured values in dB can be found in subclause 9.1.8.4 of [9]).

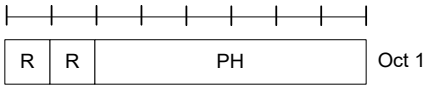

Figure 6.1.3.6-1: Power Headroom MAC control element

Table 6.1.3.6-1: Power Headroom levels for PHR

PH	Power Headroom Level
0	POWER_HEADROOM_0
1	POWER_HEADROOM_1
2	POWER_HEADROOM_2
3	POWER_HEADROOM_3
…	…
60	POWER_HEADROOM_60
61	POWER_HEADROOM_61
62	POWER_HEADROOM_62
63	POWER_HEADROOM_63

6.1.4 MAC PDU (transparent MAC)

A MAC PDU consists solely of a MAC Service Data Unit (MAC SDU) whose size is aligned to a TB; as described in figure 6.1.4-1.

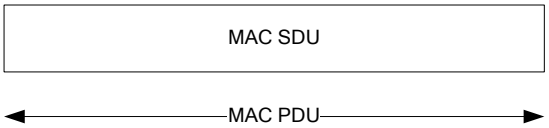

Figure 6.1.4-1: Example of MAC PDU (transparent MAC)

6.1.5 MAC PDU (Random Access Response)

A MAC PDU consists of a MAC header and zero or more MAC Random Access Responses (MAC RAR) and optionally padding as described in figure 6.1.5-4.

The MAC header is of variable size.

A MAC PDU header consists of one or more MAC PDU subheaders; each subheader corresponding to a MAC RAR except for the Backoff Indicator subheader. If included, the Backoff Indicator subheader is only included once and is the first subheader included within the MAC PDU header.

A MAC PDU subheader consists of the three header fields E/T/RAPID (as described in figure 6.1.5-1) but for the Backoff Indicator subheader which consists of the five header field E/T/R/R/BI (as described in figure 6.1.5-2).

A MAC RAR consists of the four fields R/Timing Advance Command/UL Grant/Temporary C-RNTI (as described in figure 6.1.5-3).

Padding may occur after the last MAC RAR. Presence and length of padding is implicit based on TB size, size of MAC header and number of RARs.

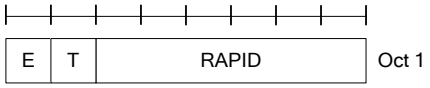

Figure 6.1.5-1: E/T/RAPID MAC subheader

Figure 6.1.5-2: E/T/R/R/BI MAC subheader

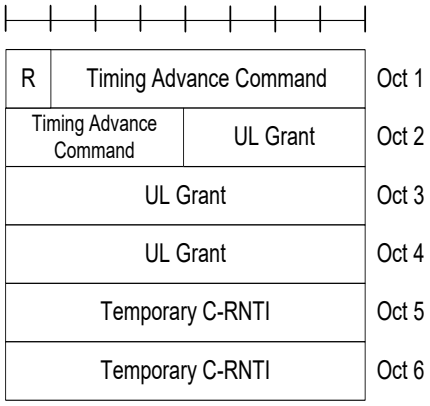

Figure 6.1.5-3: MAC RAR

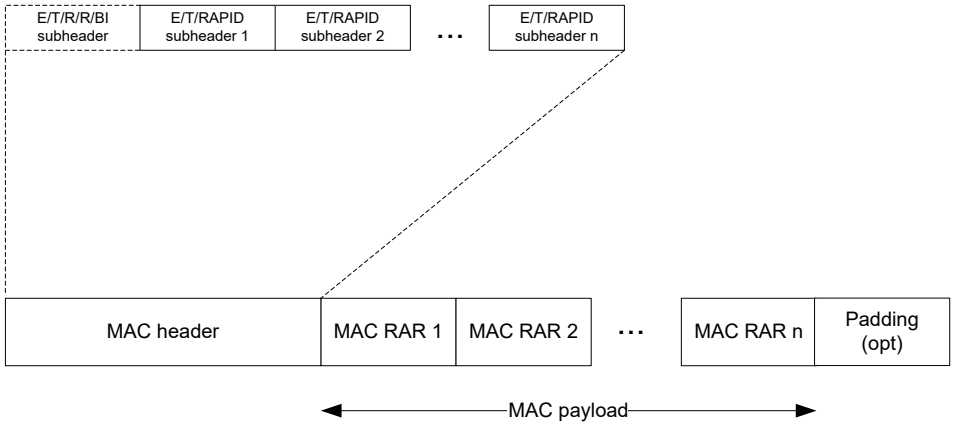

Figure 6.1.5-4: Example of MAC PDU consisting of a MAC header and MAC RARs

6.2 Formats and parameters

6.2.1 MAC header for DL-SCH and UL-SCH

The MAC header is of variable size and consists of the following fields:

- LCID: The Logical Channel ID field identifies the logical channel instance of the corresponding MAC SDU or the type of the corresponding MAC control element or padding as described in tables 6.2.1-1 and 6.2.1-2 for the DL and UL-SCH respectively. There is one LCID field for each MAC SDU, MAC control element or padding included in the MAC PDU. In addition to that, one or two additional LCID fields are included in the MAC PDU, when single-byte or two-byte padding is required but cannot be achieved by padding at the end of the MAC PDU. The LCID field size is 5 bits;

- L: The Length field indicates the length of the corresponding MAC SDU in bytes. There is one L field per MAC PDU subheader except for the last subheader and subheaders corresponding to fixed-sized MAC control elements. The size of the L field is indicated by the F field;

- F: The Format field indicates the size of the Length field as indicated in table 6.2.1-3. There is one F field per MAC PDU subheader except for the last subheader and subheaders corresponding to fixed-sized MAC control elements. The size of the F field is 1 bit. If the size of the MAC SDU is less than 128 bytes, the UE shall set the value of the F field to 0, otherwise the UE shall set it to 1;

- E: The Extension field is a flag indicating if more fields are present in the MAC header or not. The E field is set to "1" to indicate another set of at least R/R/E/LCID fields. The E field is set to "0" to indicate that either a MAC SDU, a MAC control element or padding starts at the next byte;

- R: Reserved bit, set to "0".

The MAC header and subheaders are octet aligned.

Table 6.2.1-1 Values of LCID for DL-SCH

Index	LCID values
00000	CCCH
00001-01010	Identity of the logical channel
01011-11011	Reserved
11100	UE Contention Resolution Identity
11101	Timing Advance Command
11110	DRX Command
11111	Padding

Table 6.2.1-2 Values of LCID for UL-SCH

Index	LCID values
00000	CCCH
00001-01010	Identity of the logical channel
01011-11001	Reserved
11010	Power Headroom Report
11011	C-RNTI
11100	Truncated BSR
11101	Short BSR
11110	Long BSR
11111	Padding

Table 6.2.1-3 Values of F field:

Index	Size of Length field (in bits)
0	7
1	15

6.2.2 MAC header for Random Access Response

The MAC header is of variable size and consists of the following fields:

- E: The Extension field is a flag indicating if more fields are present in the MAC header or not. The E field is set to "1" to indicate at least another set of E/T/RAPID fields follows. The E field is set to "0" to indicate that a MAC RAR or padding starts at the next byte;

- T: The Type field is a flag indicating whether the MAC subheader contains a Random Access ID or a Backoff Indicator. The T field is set to “0” to indicate the presence of a Backoff Indicator field in the subheader (BI). The T field is set to “1” to indicate the presence of a Random Access Preamble ID field in the subheader (RAPID);

- R: Reserved bit, set to "0";

- BI: The Backoff Indicator field identifies the overload condition in the cell. The size of the BI field is 4 bits;
- RAPID: The Random Access Preamble IDentitfier field identifies the transmitted Random Access Preamble (see subclause 5.1.3). The size of the RAPID field is 6 bits.

The MAC header and subheaders are octet aligned.

6.2.3 MAC payload for Random Access Response

The MAC RAR is of fixed size and consists of the following fields:

- R: Reserved bit, set to "0";
- Timing Advance Command: The Timing Advance Command field indicates the index value T_A (0, 1, 2… 1282) used to control the amount of timing adjustment that UE has to apply (see subclause 4.2.3 of [2]). The size of the Timing Advance Command field is 11 bits;
- UL Grant: The UpLink Grant field indicates the resources to be used on the uplink (see subclause 6.2 of [2]). The size of the UL Grant field is 20 bits;
- Temporary C-RNTI: The Temporary C-RNTI field indicates the temporary identity that is used by the UE during Random Access. The size of the Temporary C-RNTI field is 16 bits.

The MAC RAR is octet aligned.

7 Variables and constants

7.1 RNTI values

RNTI values are presented in Table 7.1-1 and their usage and associated Transport Channels and Logical Channels are presented in Table 7.1-2.

Table 7.1-1: RNTI values.

Value (hexa-decimal)	RNTI
0000	N/A
0001-003C	RA-RNTI, C-RNTI, Semi-Persistent Scheduling C-RNTI, Temporary C-RNTI, TPC-PUCCH-RNTI and TPC-PUSCH-RNTI (see note)
003D-FFF3	C-RNTI, Semi-Persistent Scheduling C-RNTI, Temporary C-RNTI, TPC-PUCCH-RNTI and TPC-PUSCH-RNTI
FFF4-FFFD	Reserved for future use
FFFE	P-RNTI
FFFF	SI-RNTI

NOTE: The values corresponding to the RA-RNTI values of a cell's PRACH configuration are not used in the cell for any other RNTI (C-RNTI, Semi-Persistent Scheduling C-RNTI, Temporary C-RNTI, TPC-PUCCH-RNTI or TPC-PUSCH-RNTI).

Table 7.1-2: RNTI usage.

RNTI	Usage	Transport Channel	Logical Channel
P-RNTI	Paging and System Information change notification	PCH	PCCH
SI-RNTI	Broadcast of System Information	DL-SCH	BCCH
RA-RNTI	Random Access Response	DL-SCH	N/A
Temporary C-RNTI	Contention Resolution (when no valid C-RNTI is available)	DL-SCH	CCCH
Temporary C-RNTI	Msg3 transmission	UL-SCH	CCCH, DCCH, DTCH
C-RNTI	Dynamically scheduled unicast transmission	UL-SCH	DCCH, DTCH
C-RNTI	Dynamically scheduled unicast transmission	DL-SCH	CCCH, DCCH, DTCH
C-RNTI	Triggering of PDCCH ordered random access	N/A	N/A
Semi-Persistent Scheduling C-RNTI	Semi-Persistently scheduled unicast transmission (activation, reactivation and retransmission)	DL-SCH, UL-SCH	DCCH, DTCH
Semi-Persistent Scheduling C-RNTI	Semi-Persistently scheduled unicast transmission (deactivation)	N/A	N/A
TPC-PUCCH-RNTI	Physical layer Uplink power control	N/A	N/A
TPC-PUSCH-RNTI	Physical layer Uplink power control	N/A	N/A

7.2 Backoff Parameter values

Backoff Parameter values are presented in Table 7.2-1.

Table 7.2-1: Backoff Parameter values.

Index	Backoff Parameter value (ms)
0	0
1	10
2	20
3	30
4	40
5	60
6	80
7	120
8	160
9	240
10	320
11	480
12	960
13	Reserved
14	Reserved
15	Reserved

The reserved values of the backoff parameter if received by the current release version UEs shall be taken as 960 ms.

7.3 PRACH Mask Index values

Table 7.3-1: PRACH Mask Index values

PRACH Mask Index	Allowed PRACH (FDD)	Allowed PRACH (TDD)
0	All	All
1	PRACH Resource Index 0	PRACH Resource Index 0
2	PRACH Resource Index 1	PRACH Resource Index 1
3	PRACH Resource Index 2	PRACH Resource Index 2
4	PRACH Resource Index 3	PRACH Resource Index 3
5	PRACH Resource Index 4	PRACH Resource Index 4
6	PRACH Resource Index 5	PRACH Resource Index 5
7	PRACH Resource Index 6	Reserved
8	PRACH Resource Index 7	Reserved
9	PRACH Resource Index 8	Reserved
10	PRACH Resource Index 9	Reserved
11	Every, in the time domain, even PRACH opportunity 1st PRACH Resource Index in subframe	Every, in the time domain, even PRACH opportunity 1st PRACH Resource Index in subframe
12	Every, in the time domain, odd PRACH opportunity 1st PRACH Resource Index in subframe	Every, in the time domain, odd PRACH opportunity 1st PRACH Resource Index in subframe
13	Reserved	1st PRACH Resource Index in subframe
14	Reserved	2nd PRACH Resource Index in subframe
15	Reserved	3rd PRACH Resource Index in subframe

7.4 Subframe_Offset values

Subframe_Offset values are presented in Table 7.4-1.

Table 7.4-1: Subframe_Offset values

TDD UL/DL configuration	Position of initial Semi-Persistent grant	Subframe_Offset value (ms)
0	N/A	0
1	Subframes 2 and 7	1
	Subframes 3 and 8	-1
2	Subframe 2	5
	Subframe 7	-5
3	Subframes 2 and 3	1
	Subframe 4	-2
4	Subframe 2	1
	Subframe 3	-1
5	N/A	0
6	N/A	0

7.5 TTI_BUNDLE_SIZE value

The parameter TTI_BUNDLE_SIZE is 4.

7.6 DELTA_PREAMBLE values

The DELTA_PREAMBLE preamble format based power offset values are presented in Table 7.6-1.

Table 7.6-1: DELTA_PREAMBLE values.

Preamble Format	DELTA_PREAMBLE value
0	0 dB
1	0 dB
2	-3 dB
3	-3 dB
4	8 dB

Where the Preamble Format is given by *prach-ConfigIndex* [7].

7.7 HARQ RTT Timer

For FDD the HARQ RTT Timer is set to 8 subframes. For TDD the HARQ RTT Timer is set to k + 4 subframes, where k is the interval between the downlink transmission and the transmission of associated HARQ feedback, as indicated in Table 10.1-1 of [2].

Annex A (normative): Handling of measurement gaps

In a subframe that is part of a measurement gap, the UE shall not perform the transmission of HARQ feedback and CQI/PMI/RI, and SRS shall not be reported.

Annex B (informative): Contention resolution for RACH access

When checking whether contention resolution was successful a UE considers the MAC header structures shown below for the processing of a MAC PDU containing a UE Contention Resolution Identity MAC control element.

R	R	E	LCID (11100)

Case 1: MAC subheader for MAC control element

R	R	E	LCID (11100)
R	R	E	LCID (00000)

Case 2: MAC subheader for MAC control element + MAC subheader for MAC SDU (CCCH)

R	R	E	LCID (11111)
R	R	E	LCID (11100)
R	R	E	LCID (00000)

Case 3: MAC subheader for single-byte padding + MAC subheader for MAC control element + MAC subheader for MAC SDU (CCCH)

R	R	E	LCID (11111)
R	R	E	LCID (11111)
R	R	E	LCID (11100)
R	R	E	LCID (00000)

Case 4: MAC subheaders for two-byte padding + MAC subheader for MAC control element + MAC subheader for MAC SDU (CCCH)

R	R	E	LCID (11100)
R	R	E	LCID (00000)
F	L		
R	R	E	LCID (11111)

Case 5: MAC subheader for MAC control element + MAC subheader (7-bits L-field) for MAC SDU (CCCH) + MAC subheader for padding

R	R	E	LCID (11100)
R	R	E	LCID (00000)
F	L		
L			
R	R	E	LCID (11111)

Case 6: MAC subheader for MAC control element + MAC subheader (15-bits L-field) for MAC SDU (CCCH) + MAC subheader for padding

Annex C (informative): Change history

Change history							
Date	**TSG #**	**TSG Doc.**	**CR**	**Rev**	**Subject/Comment**	**Old**	**New**
2007-06	RAN2#58 bis	R2-072710			MAC Protocol Specification Baseline	-	
2007-06	RAN2#58 bis	R2-072912			Text Proposal for UL HARQ (Tdoc R2-072708) Text Proposal for DL HARQ (Tdoc R2-072707) Text Proposal for RACH procedure (Tdoc R2-072640) Text Proposal for Logical Channel prioritization (Tdoc R2-072643)		0.1.0
2007-06	RAN2#58 bis	R2-072994			Basic MAC PDU structure (Tdoc R2-072983) with updates Agreements on time-frequency resource configuration (Tdoc R2-072993) Agreement on RA-RNTI association (Tdoc R2-072993) Clarification on RA Response reception (Tdoc R2-072993)	0.1.0	0.1.1
2007-08	RAN2#59	R2-073715			Removed reference to non-existing table (Tdoc R2-073473) Incorrect mapping of logical to transport channel (Tdoc R2-073473) Un-necessary error checking in HARQ process procedure (Tdoc R2-073473) Removal of reference to timing relation for HARQ feedback (Tdoc R2-073473) Correction of Internal variable name (Tdoc R2-073473) Correction of procedure in case of successful HARQ reception (Tdoc R2-073473)	0.1.1	0.2.0
2007-09	RAN2#59	R2-073885			Text proposal for Random Access procedure Text proposal on HARQ clarification for TDD Text proposal on HARQ for grants	0.2.0	0.2.1
2007-09	RAN#37	RP-070688			Clean version for information	0.2.1	1.0.0
2007-10	RAN2#59 bis	R2-074530			Editorial update with Editor's notes (Tdoc R2-074211).	1.0.0	1.1.0
2007-11	RAN2#60	R2-075093			Agreements on MAC PDU format (R2-074536) Corrections on Random Access Procedure (R2-074536)	1.1.0	1.1.1
2007-11	RAN2#60	R2-075243			Endorsement of v1.1.1 Removal of FFS on DL CCCH existence	1.1.1	1.2.0
2007-11	RAN2#60	R2-075488			Agreement on identity used Random Access Response (R2-075038) Agreement on Local Nack1 (R2-074949) PUCCH Resource handling (R2-075432) UL HARQ agreements (R2-075432) Agreements on semi-persistent scheduling (R2-075432, 36.300) Agreements on BSR/SR triggers (R2-075432) Agreements on BSR contents (R2-075432) Agreements on Timing Advance principles (36.300) Agreements on DRX control (36.300) Handling of P-BCH, D-BCH, PCH (R2-075246)	1.2.0	1.3.0
2007-11	RP-38	RP-070917			Clean version, presented at TSG RAN-38 for approval	1.3.0	2.0.0
2007-12	RP-38	-			Approved at TSG RAN-38 and placed under change control	2.0.0	8.0.0
2008-03	RP-39	RP-080162	0001	2	CR to 36.321 with E-UTRA MAC protocol specification update	8.0.0	8.1.0
2008-05	RP-40	RP-080410	0002	1	36.321 CR covering agreements of RAN2 #61bis and RAN2#62	8.1.0	8.2.0
2008-09	RP-41	RP-080690	0003	-	Clarification on data available for transmission for BSR triggering	8.2.0	8.3.0
	RP-41	RP-080690	0004	-	CR to 36.321 on failure indication after maximum number of HARQ transmissions	8.2.0	8.3.0
	RP-41	RP-080690	0005	4	Clarifications and Corrections of DL and UL Data Transfer (SCH, RACH and SR)	8.2.0	8.3.0
	RP-41	RP-080690	0006	-	CR to 36.321 on Buffer size levels for BSR	8.2.0	8.3.0
	RP-41	RP-080690	0007	-	Clarifications on DRX	8.2.0	8.3.0
	RP-41	RP-080690	0008	-	Clarification on UE behavior for DRX and configured measurement gaps	8.2.0	8.3.0
	RP-41	RP-080690	0009	3	Correction to MAC Padding BSR	8.2.0	8.3.0
	RP-41	RP-080690	0010	-	Correction to UE transmission power headroom report for LTE	8.2.0	8.3.0
	RP-41	RP-080690	0011	-	Corrections on BSR	8.2.0	8.3.0
	RP-41	RP-080690	0012	-	CR to 36.321 REL-8 on Format of UL grant in Message 2	8.2.0	8.3.0
	RP-41	RP-080690	0015	-	CR to 36.321 REL-8 on PUSCH PUCCH Power Control RNTIs	8.2.0	8.3.0
	RP-41	RP-080690	0016	-	CR to 36.321 REL-8 on RACH uniform random backoff	8.2.0	8.3.0

	RP-41	RP-080690	0017	1	E-UTRA MAC protocol specification update	8.2.0	8.3.0
	RP-41	RP-080690	0020	-	TP for number of HARQ processes and MIMO	8.2.0	8.3.0
	RP-41	RP-080690	0022	-	Update of MAC dedicated preamble expiry	8.2.0	8.3.0
	RP-41	RP-080690	0027	-	Handling of Semi-Persistent grants and assignments	8.2.0	8.3.0
	RP-41	RP-080690	0051	1	Corrections relating to RACH	8.2.0	8.3.0
	RP-41	RP-080690	0058	1	UL Channel Prioritisation	8.2.0	8.3.0
	RP-41	RP-080690	0071	2	Corrections relating to RACH partitioning	8.2.0	8.3.0
	RP-41	RP-080690	0091	-	Correction on Random Access Response reception behaviour	8.2.0	8.3.0
	RP-41	RP-080690	0103	-	Upper limit of logical channel id	8.2.0	8.3.0
	RP-41	RP-080690	0104	-	Clarifications and Corrections for HARQ operation at TAT expiry and RACH contention resolution	8.2.0	8.3.0
2008-12	RP-42	RP-081018	0105	-	CR0105 to 36.321 [Rel-8] on PHR Periodic Timer Start	8.3.0	8.4.0
	RP-42	RP-081018	0106	1	Proposed R1 of CR0106 to 36.321 [Rel-8] on PHR Reference	8.3.0	8.4.0
	RP-42	RP-081018	0107	1	CR 0107 to 36.321 Interactions between measurement gap and Msg3 transmission	8.3.0	8.4.0
	RP-42	RP-081018	0108	2	Proposed R1 of CR0108 to 36.321 [Rel-8] on PHR Reporting Values	8.3.0	8.4.0
	RP-42	RP-081018	0109	-	Correction relating to equal priorities	8.3.0	8.4.0
	RP-42	RP-081018	0110	-	CR 0110 to 36.321 on Correction to PHR	8.3.0	8.4.0
	RP-42	RP-081018	0112	1	CR0112r1 to 36.321 [Rel-8] Correction to BCCH Reception procedure	8.3.0	8.4.0
	RP-42	RP-081018	0113	-	Contention Resolution Timer	8.3.0	8.4.0
	RP-42	RP-081018	0114	-	PCH reception	8.3.0	8.4.0
	RP-42	RP-081018	0115	-	Correction to reception of assignments and grants	8.3.0	8.4.0
	RP-42	RP-081018	0116	-	Correction on Contention Resolution	8.3.0	8.4.0
	RP-42	RP-081018	0117	2	Proposed R1 of CR0117 to 36.321 [Rel-8] on on SR Clarifications and Repetitions	8.3.0	8.4.0
	RP-42	RP-081078	0118	2	Clarification on Padding value	8.3.0	8.4.0
	RP-42	RP-081018	0119	-	CR 0119 to 36.321 Correction and Clarification on TTI Bundling	8.3.0	8.4.0
	RP-42	RP-081018	0120	1	Clarification of DRX Active Time	8.3.0	8.4.0
	RP-42	RP-081018	0121	4	Text Proposal for Dedicated Preamble Assignment	8.3.0	8.4.0
	RP-42	RP-081018	0122	-	CR0122 to 36.321 [Rel-8] on Message 3 Definition	8.3.0	8.4.0
	RP-42	RP-081018	0123	1	Correction to prevent wrong contention resolution by adaptive retransmission command	8.3.0	8.4.0
	RP-42	RP-081018	0124	-	Bucket Size Parameter	8.3.0	8.4.0
	RP-42	RP-081018	0125	2	CR0125r2 to 36.321 [Rel-8] Correction to Multiple BSR	8.3.0	8.4.0
	RP-42	RP-081018	0127	-	CR0127 to 36.321 [Rel-8] RACH preambles labelling	8.3.0	8.4.0
	RP-42	RP-081018	0128	1	CR0128r1 to 36.321 [Rel-8] merging CR0126r0 and CR0128r0	8.3.0	8.4.0
	RP-42	RP-081018	0129	1	CR0129r1 to 36.321 [Rel-8] Correction to PDU Format	8.3.0	8.4.0
	RP-42	RP-081018	0130	-	CQI/ SRS/PMI/RI transmission during active time	8.3.0	8.4.0
	RP-42	RP-081018	0131	1	NDI and Msg4 Carrying Contention Resolution ID	8.3.0	8.4.0
	RP-42	RP-081018	0132	1	CR0132 to 36.321 [Rel-8] on MAC BSR trigger	8.3.0	8.4.0
	RP-42	RP-081018	0133	-	Clarification about Restarting the Periodic BSR Timer	8.3.0	8.4.0
	RP-42	RP-081018	0134	-	Correction to RA procedure initiated by eNB PDCCH order	8.3.0	8.4.0
	RP-42	RP-081018	0135	1	Correction on PHR triggering condition	8.3.0	8.4.0
	RP-42	RP-081018	0136	-	CR 0136 to 36.321 on Correction to UL HARQ Process for the transmission of Msg3	8.3.0	8.4.0
	RP-42	RP-081018	0137	2	SPS occasions	8.3.0	8.4.0
	RP-42	RP-081018	0138	-	Robustness of Buffer Status Reporting	8.3.0	8.4.0
	RP-42	RP-081018	0139	-	Proposed CR to 36.321 [Rel-8] on UL HARQ and Measurement Gaps	8.3.0	8.4.0
	RP-42	RP-081018	0142	1	TAT and RACH procedure	8.3.0	8.4.0
	RP-42	RP-081018	0143	1	SRS and CQI Resources Release upon TAT Expiry	8.3.0	8.4.0
	RP-42	RP-081018	0157	1	Proposed CR to 36.321 Correction to RACH procedure	8.3.0	8.4.0
	RP-42	RP-081018	0162	1	BSR format for reporting empty buffers	8.3.0	8.4.0
	RP-42	RP-081018	0165	-	TTI Bundling Configuration	8.3.0	8.4.0
	RP-42	RP-081018	0166	1	Corrections to semi-persistent scheduling	8.3.0	8.4.0
	RP-42	RP-081018	0167	2	Priotitization of MAC control elements	8.3.0	8.4.0
	RP-42	RP-081018	0168	-	Correction to starting of TA timer	8.3.0	8.4.0
	RP-42	RP-081018	0173	1	Proposed CR to 36.321 SPS implicit release on UL	8.3.0	8.4.0
	RP-42	RP-081018	0174	-	Proposed CR to 36.321 Measurement gaps and SPS	8.3.0	8.4.0
	RP-42	RP-081018	0175	-	Proposed CR to 36.321 Setting reserved bits to zero	8.3.0	8.4.0
	RP-42	RP-081018	0185	-	Proposed CR to 36.321 [Rel-8] MAC ResetReconfig Option 2	8.3.0	8.4.0
	RP-42	RP-081018	0188	2	RV setting	8.3.0	8.4.0
	RP-42	RP-081018	0189	-	Corrections to Random Access Procedure	8.3.0	8.4.0
	RP-42	RP-081018	0198	-	Number of HARQ processes for MIMO	8.3.0	8.4.0
	RP-42	RP-081018	0201	-	Corrections to power control and random access	8.3.0	8.4.0
	RP-42	RP-081018	0206	-	Correction on the definition of the PDCCH-subframe	8.3.0	8.4.0
	RP-42	RP-081018	0211	1	Correction to the coexist of SPS-RNTI and SI-RNTI or RA-RNTI	8.3.0	8.4.0
	RP-42	RP-081018	0220	-	Explicit release of SPS	8.3.0	8.4.0
	RP-42	RP-081018	0225	2	Linking HARQ process ID with the SPS resource	8.3.0	8.4.0
	RP-42	RP-081018	0231	-	Bucket Parameter Update	8.3.0	8.4.0

	RP-42	RP-081018	0232	1	Clarification on “PDCCH indicates a new transmission” for DRX	8.3.0	8.4.0
	RP-42	RP-081018	0233	1	Editorial corrections to MAC	8.3.0	8.4.0
	RP-42	RP-081018	0236	-	RB suspension and BSR contents	8.3.0	8.4.0
	RP-42	RP-081018	0239	-	RV setting	8.3.0	8.4.0
	RP-42	RP-081018	0240	2	Preamble group selection	8.3.0	8.4.0
	RP-42	RP-081018	0241	-	Use of dedicated preambles after HO complete	8.3.0	8.4.0
	RP-42	RP-081018	0242	-	Introduction of HARQ RTT Timer	8.3.0	8.4.0
	RP-42	RP-081018	0243	-	Correction to DRX configuration	8.3.0	8.4.0
2009-03	RP-43	RP-090128	0245	-	CR to 36.321 on BSR clarification	8.4.0	8.5.0
	RP-43	RP-090128	0246	2	Freeing of reserved RNTIs	8.4.0	8.5.0
	RP-43	RP-090128	0247	-	Correction to MAC reset	8.4.0	8.5.0
	RP-43	RP-090128	0248	-	Correction to Initialization of Prioritization	8.4.0	8.5.0
	RP-43	RP-090128	0249	-	Local NACKing Optionality MAC CR	8.4.0	8.5.0
	RP-43	RP-090128	0250	1	Position of the Backoff Indicator subheader	8.4.0	8.5.0
	RP-43	RP-090128	0251	-	Missing reserved bit setting	8.4.0	8.5.0
	RP-43	RP-090128	0252	-	Expired TAT and PUSCH transmission	8.4.0	8.5.0
	RP-43	RP-090128	0253	-	Expired TAT and HARQ feedback	8.4.0	8.5.0
	RP-43	RP-090128	0254	1	Counter proposal to R2-090969 on Management for HARQ buffer with TAT	8.4.0	8.5.0
	RP-43	RP-090128	0255	-	HARQ Feedback and Contention Resolution	8.4.0	8.5.0
	RP-43	RP-090128	0256	-	Corrections to redundancy version control for system information	8.4.0	8.5.0
	RP-43	RP-090128	0257	-	Mapping of the RNTIs to different transport channels	8.4.0	8.5.0
	RP-43	RP-090128	0258	-	DRX and UL Retransmissions	8.4.0	8.5.0
	RP-43	RP-090128	0259	-	Definition of DRX Short Cycle Timer	8.4.0	8.5.0
	RP-43	RP-090128	0260	-	Small corrections to RACH	8.4.0	8.5.0
	RP-43	RP-090128	0261	-	Processing of contention resolution message	8.4.0	8.5.0
	RP-43	RP-090128	0262	-	Corrections to power control and random access	8.4.0	8.5.0
	RP-43	RP-090128	0263	-	Missing condition for unsuccessful reception of Msg2	8.4.0	8.5.0
	RP-43	RP-090128	0264	1	Corrections relating to Random Access required inputs	8.4.0	8.5.0
	RP-43	RP-090128	0265	-	Bucket Parameter Update	8.4.0	8.5.0
	RP-43	RP-090128	0266	2	Correction to Handling of triggered PHR	8.4.0	8.5.0
	RP-43	RP-090128	0267	-	SPS resource release on D-SR failure	8.4.0	8.5.0
	RP-43	RP-090128	0269	2	NDI handling when measurement gap and SPS occassion collide	8.4.0	8.5.0
	RP-43	RP-090128	0270	-	Correction relating to PDCCH order	8.4.0	8.5.0
	RP-43	RP-090128	0271	-	Error Handling	8.4.0	8.5.0
	RP-43	RP-090128	0272	-	Various clarifications/corrections to TS36.321	8.4.0	8.5.0
	RP-43	RP-090128	0273	1	Disassembly, Demultiplexing and Multiplexing functions	8.4.0	8.5.0
	RP-43	RP-090128	0274	1	Miscellaneous corrections to MAC	8.4.0	8.5.0
	RP-43	RP-090128	0275	2	CR on Interactions between Msg3 transmission and TTI bundling	8.4.0	8.5.0
	RP-43	RP-090128	0276	-	TTI Bundling	8.4.0	8.5.0
	RP-43	RP-090128	0278	1	Correction to BSR trigger at serving cell change	8.4.0	8.5.0
	RP-43	RP-090128	0279	1	Correction to Release of SPS	8.4.0	8.5.0
	RP-43	RP-090128	0280	2	Usage of RRC Parameters	8.4.0	8.5.0
	RP-43	RP-090128	0281	-	Clarification of MAC Timer status	8.4.0	8.5.0
	RP-43	RP-090128	0282	1	Correction on MAC PDU subheader description	8.4.0	8.5.0
	RP-43	RP-090128	0283	1	UE behaviour at CURRENT_TX_NB reaches maximum value	8.4.0	8.5.0
	RP-43	RP-090128	0285	-	Reporting During DRX	8.4.0	8.5.0
	RP-43	RP-090128	0289	-	NDI handling after random access procedure	8.4.0	8.5.0
	RP-43	RP-090128	0290	1	Dedicated preamble handling after random access failure	8.4.0	8.5.0
	RP-43	RP-090128	0292	-	NDI and grant in Message 2	8.4.0	8.5.0
	RP-43	RP-090128	0293	1	Correction relating to BCCH HARQ	8.4.0	8.5.0
	RP-43	RP-090128	0300	1	Corrections to Msg3 definition and usage	8.4.0	8.5.0
	RP-43	RP-090128	0303	-	PRACH selection must use prach-ConfigurationIndex	8.4.0	8.5.0
	RP-43	RP-090128	0305	-	Clarification on RETX_BSR_TIMER	8.4.0	8.5.0
	RP-43	RP-090128	0307	3	MAC Structure in UE Side	8.4.0	8.5.0
	RP-43	RP-090128	0308	-	Clarification on Random Access Procedure	8.4.0	8.5.0
	RP-43	RP-090128	0314	-	Clarification on the CR timer	8.4.0	8.5.0
	RP-43	RP-090128	0316	-	Correction on BSR	8.4.0	8.5.0
	RP-43	RP-090128	0318	1	Clarification on MAC reconfiguration of timers and counters	8.4.0	8.5.0
	RP-43	RP-090128	0320	-	HARQ feedback, CQI/PMI/RI and SRS transmissions and measurement gaps	8.4.0	8.5.0
	RP-43	RP-090128	0324	-	MAC PDU subheader corresponding to padding	8.4.0	8.5.0
	RP-43	RP-090128	0333	-	CR On Backoff table	8.4.0	8.5.0
	RP-43	RP-090128	0334	3	TTI Bundling Operation	8.4.0	8.5.0
	RP-43	RP-090128	0341	1	Enforcing new transmission after flushing HARQ process	8.4.0	8.5.0
2009-06	RP-44	RP-090513	0342	-	Correction on HARQ feedback transmission	8.5.0	8.6.0
	RP-44	RP-090513	0343	1	Clarification on the DL assignment/UL grant reception in SPS	8.5.0	8.6.0
	RP-44	RP-090513	0344	1	PHR timer handling after handover	8.5.0	8.6.0
	RP-44	RP-090513	0346	2	MAC PDU for Msg2	8.5.0	8.6.0
	RP-44	RP-090513	0347	2	MAC Error handling	8.5.0	8.6.0
	RP-44	RP-090513	0348	-	Correction on SR cancellation	8.5.0	8.6.0

	RP-44	RP-090513	0349	1	Correction to RETX_BSR_TIMER	8.5.0	8.6.0
	RP-44	RP-090513	0350	1	CR to 36.321 on UL SPS Implicit Release	8.5.0	8.6.0
	RP-44	RP-090513	0351	2	Various correction to MAC	8.5.0	8.6.0
	RP-44	RP-090513	0369	-	Correction to Uplink grant by temporary C-RNTI	8.5.0	8.6.0
	RP-44	RP-090513	0370	-	Clarification on simultaneous reception of RA-RNTI and C-RNTI	8.5.0	8.6.0
	RP-44	RP-090513	0374	-	Correction on timeAlignmentTimer validity in MAC	8.5.0	8.6.0
	RP-44	RP-090513	0376	1	CR for MAC padding	8.5.0	8.6.0
	RP-44	RP-090513	0377	-	Correction to duplicate reception of TA command (2nd method)	8.5.0	8.6.0
2009-09	RP-45	RP-090906	0379	-	Correction to NDI semantics	8.6.0	8.7.0
	RP-45	RP-090906	0380	1	Minor corrections to 36.321	8.6.0	8.7.0
	RP-45	RP-090906	0381	2	UE behaviour when MBSFN subframe and a configured downlink assignment collide	8.6.0	8.7.0
	RP-45	RP-090906	0399	-	Correction to HARQ process ID for DL SPS retransmissions	8.6.0	8.7.0
2009-12	RP-46	RP-091314	0402	2	Clarification on BSR trigger	8.7.0	8.8.0
	RP-46	RP-091314	0405	-	RNTI for CCCH	8.7.0	8.8.0