US 20120303178A1

(19) United States

(12) Patent Application Publication

Hendry et al.

(10) Pub. No.: US 2012/0303178 A1

(43) Pub. Date: Nov. 29, 2012

(54) METHOD AND SYSTEM FOR ESTABLISHING USER SETTINGS OF VEHICLE COMPONENTS

(76) Inventors: **Jeffrey C. Hendry**, Waterford, MI (US); **Michael Mashkevich**, West Bloomfield, MI (US)

(21) Appl. No.: **13/116,510**

(22) Filed: **May 26, 2011**

**Publication Classification**

(51) **Int. Cl.**
*G06F 17/00* (2006.01)

(52) **U.S. Cl.** ..... **701/2**

(57) **ABSTRACT**

A system and method for reinstating settings of at least one vehicle component of a vehicle is disclosed. A request to establish a communications link between a communications module of the vehicle and an external device associated with a user of the vehicle from the external device is received by a communications module. Based on the request to establish the communications link, the settings of the at least one vehicle component of the vehicle a retrieved from a data store associated with the at least one vehicle component. The settings of the at least one vehicle component are adjusted based on the retrieved settings.

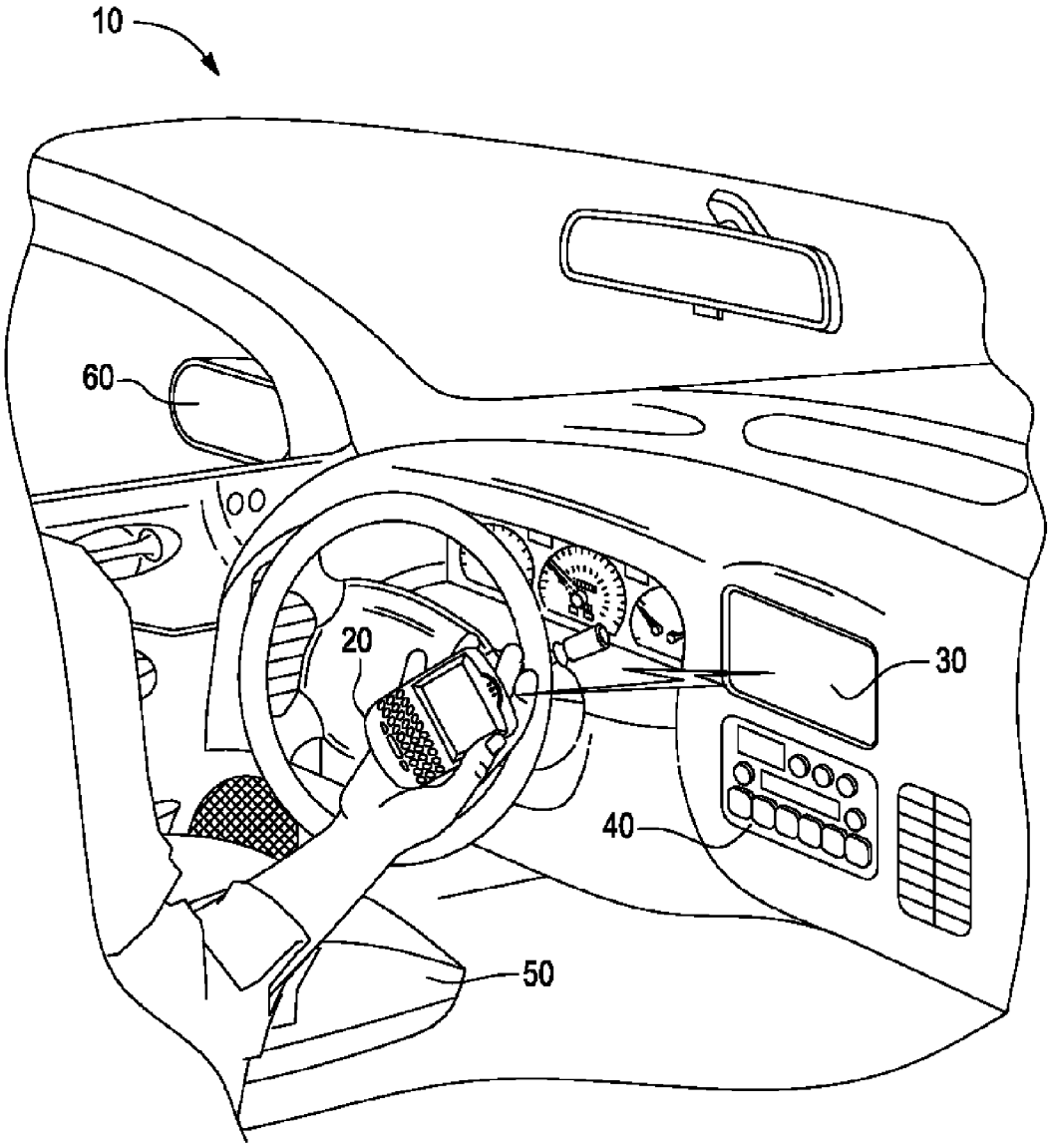




TOYOTA EXHIBIT 1006

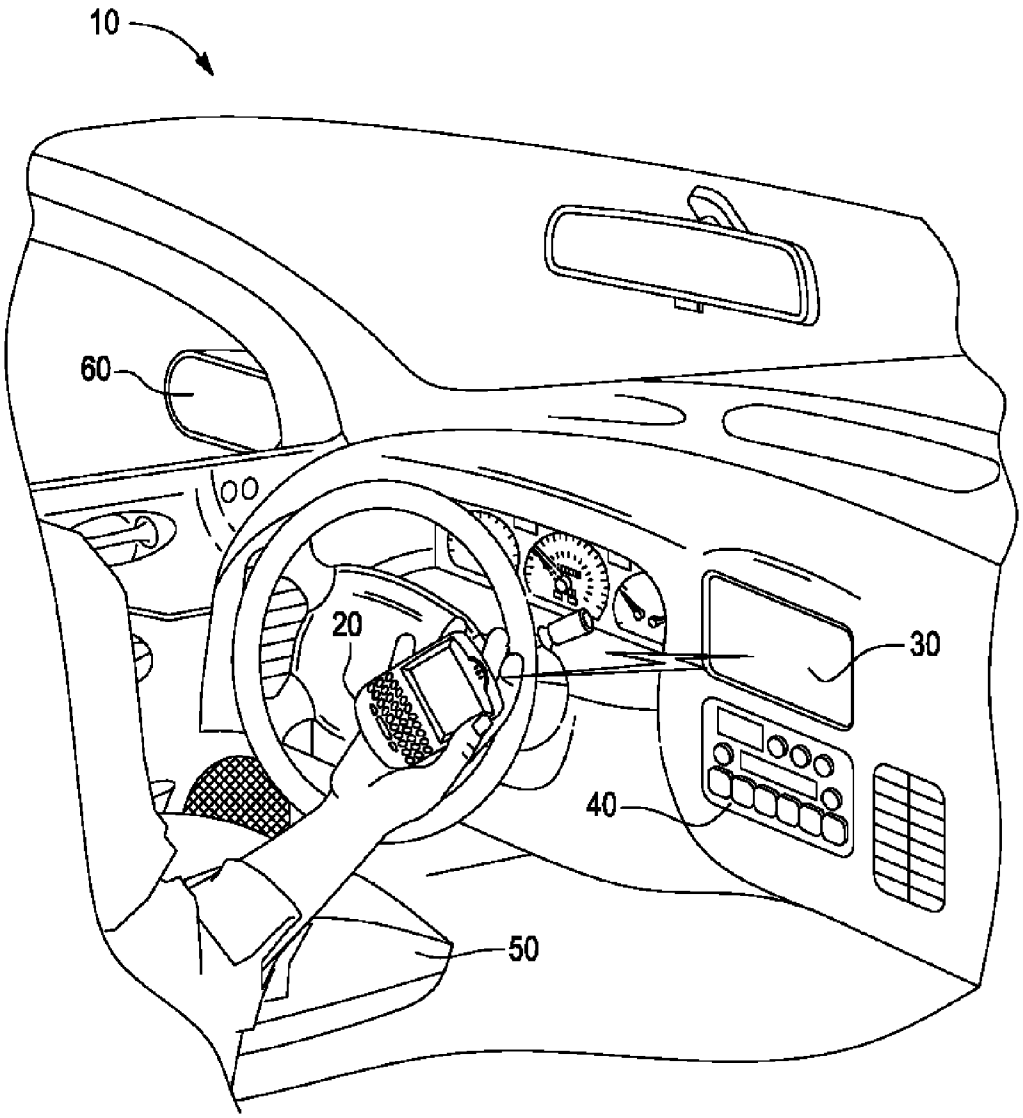


Fig - 1

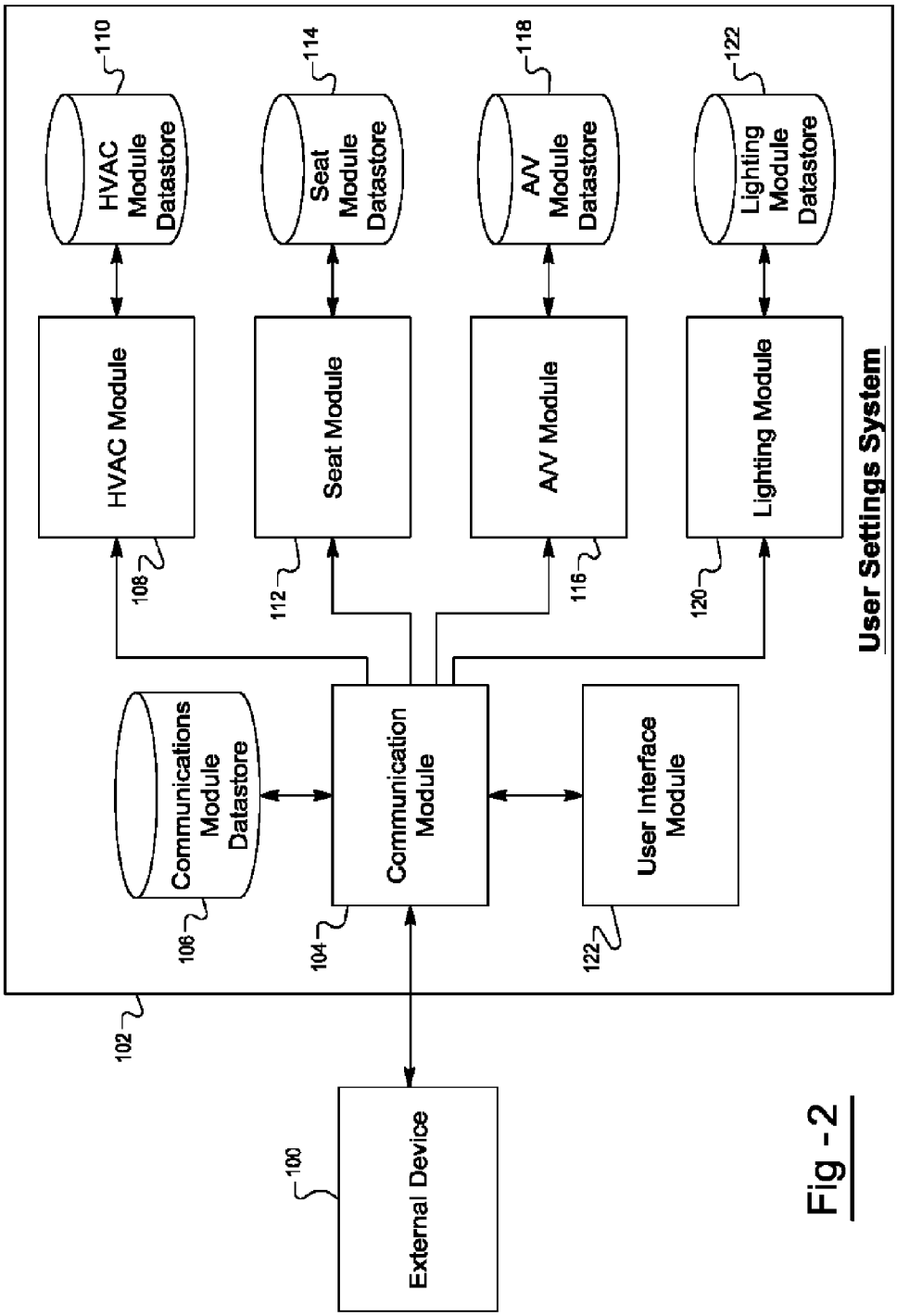
HVAC Module Datastore
110
Seat Module Datastore
114
A/V Module Datastore
118
Lighting Module Datastore
122
HVAC Module
108
Seat Module
112
A/V Module
116
Lighting Module
120
User Settings System
Communications Module Datastore
106
Communication Module
104
User Interface Module
122
102
External Device
100

Fig -2

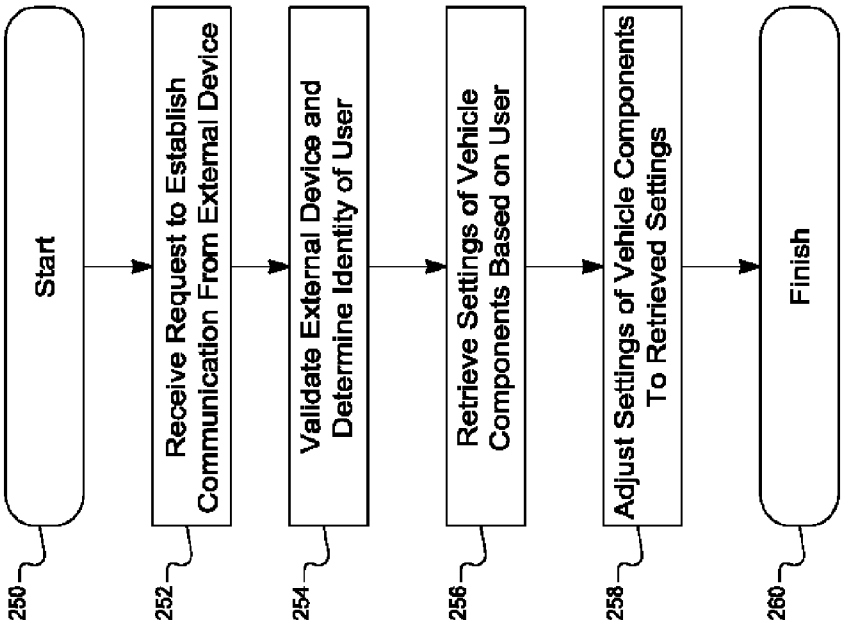
Start
250
Receive Request to Establish Communication From External Device
252
Validate External Device and Determine Identity of User
254
Retrieve Settings of Vehicle Components Based on User
256
Adjust Settings of Vehicle Components To Retrieved Settings
258
Finish
260

Fig - 3B

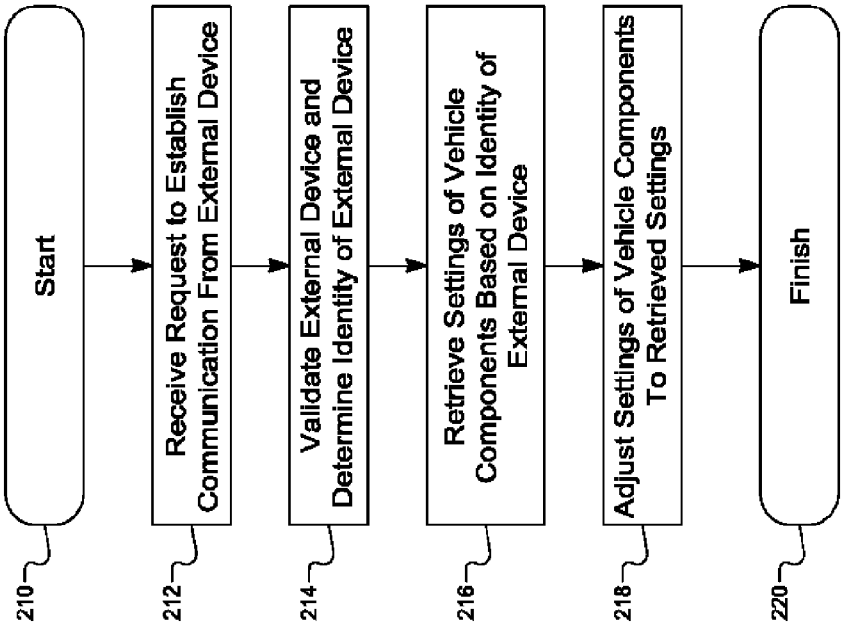
Start
210
Receive Request to Establish Communication From External Device
212
Validate External Device and Determine Identity of External Device
214
Retrieve Settings of Vehicle Components Based on Identity of External Device
216
Adjust Settings of Vehicle Components To Retrieved Settings
218
Finish
220

Fig - 3A

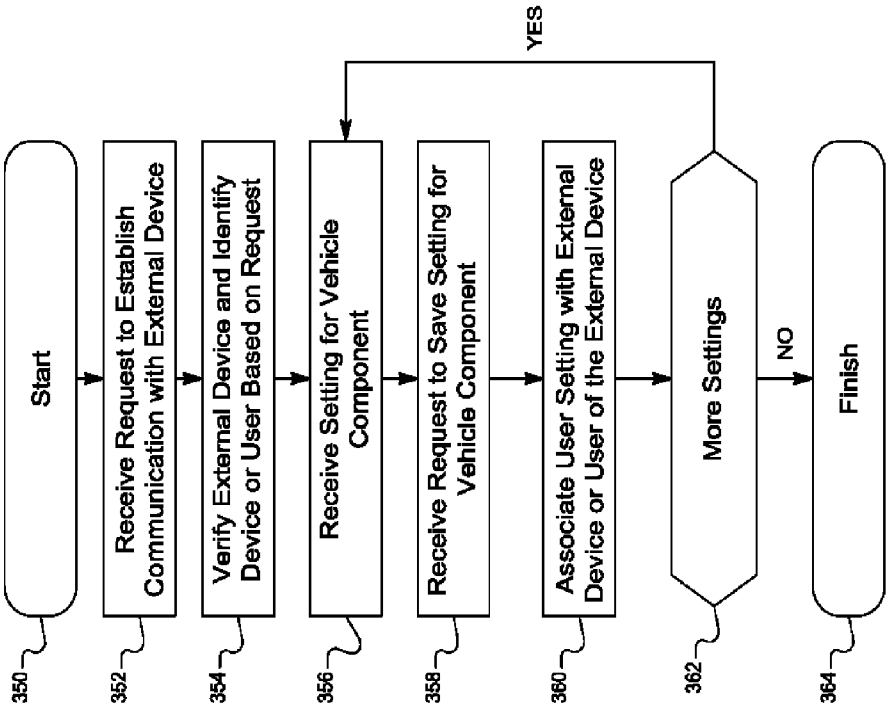
Start
350
Receive Request to Establish Communication with External Device
352
Verify External Device and Identify Device or User Based on Request
354
Receive Setting for Vehicle Component
356
Receive Request to Save Setting for Vehicle Component
358
Associate User Setting with External Device or User of the External Device
360
More Settings
362
YES
NO
Finish
364

Fig - 4B

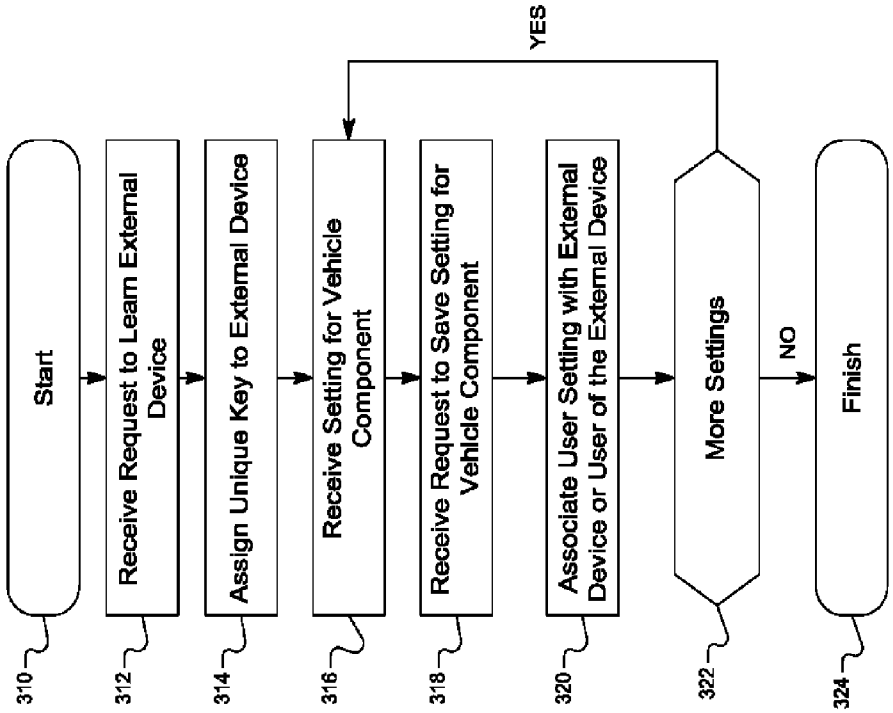
Start
310
Receive Request to Learn External Device
312
Assign Unique Key to External Device
314
Receive Setting for Vehicle Component
316
Receive Request to Save Setting for Vehicle Component
318
Associate User Setting with External Device or User of the External Device
320
More Settings
322
YES
NO
Finish
324

Fig - 4A

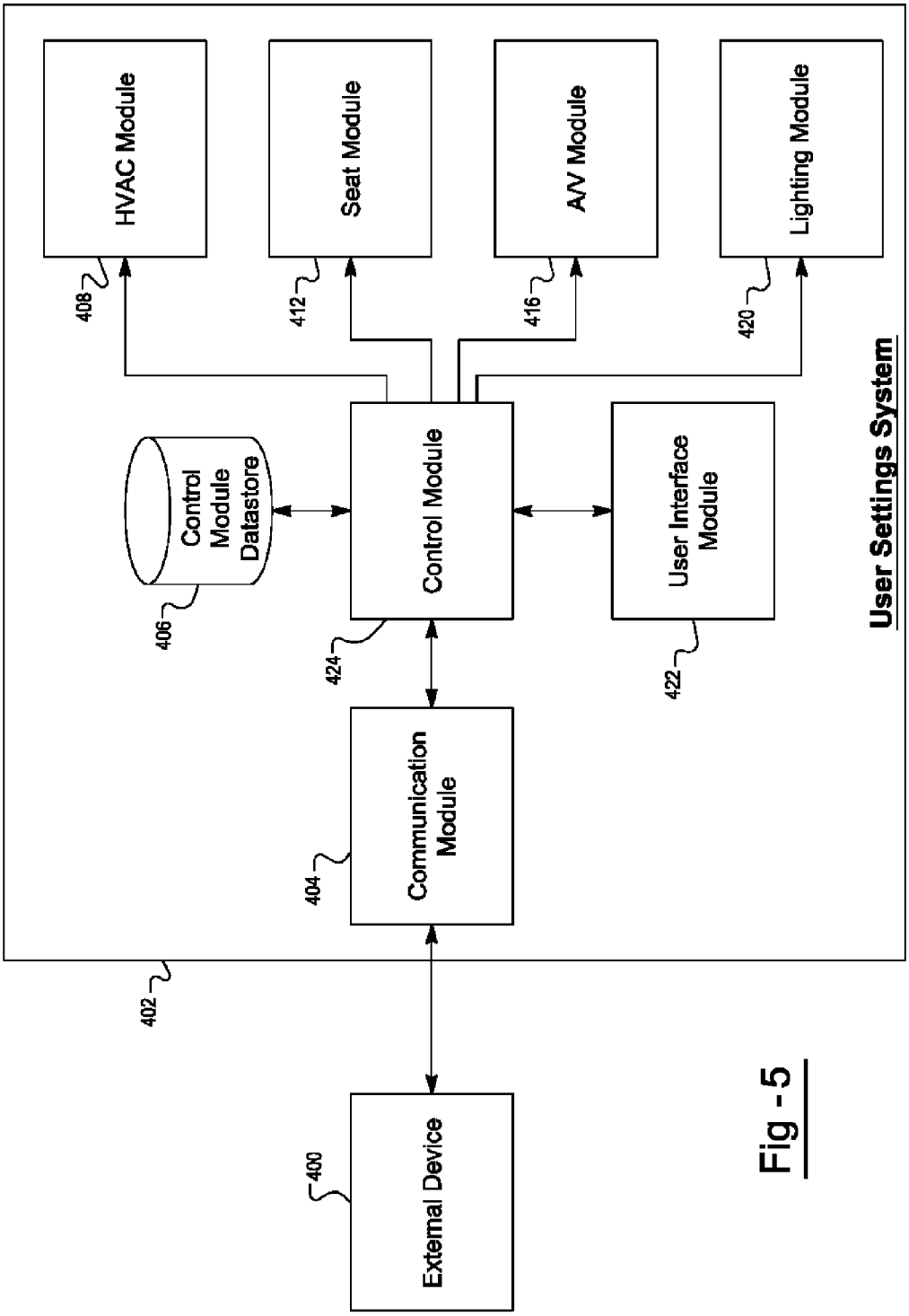
HVAC Module
Seat Module
A/V Module
Lighting Module
408
412
416
420
Control Module Datastore
Control Module
User Interface Module
User Settings System
406
424
422
Communication Module
404
402
External Device
400

Fig -5

# METHOD AND SYSTEM FOR ESTABLISHING USER SETTINGS OF VEHICLE COMPONENTS

## FIELD OF THE INVENTION

**[0001]** The present disclosure relates generally to a method and system for establishing user settings of vehicle components of a vehicle. In particular, the system retrieves the user settings from at least one data store associated with the vehicle based on a request from an external device to establish a communications link with a communications module of the vehicle.

## BACKGROUND

**[0002]** Many vehicles today allow a user to change the settings of various vehicle components. For instance, a user can adjust various settings, including settings of the seat, settings of the heating, ventilation, and air conditioning system ("HVAC system"), settings of the audio/visual system, settings of the lighting system, settings of the sounds that the vehicle makes, and various other settings.

**[0003]** Furthermore, some vehicles may allow a user to save settings personal to the user. In these vehicles, the user can push a button, e.g. a mechanical switch on the console of the vehicle, and the vehicle settings will be restored to the saved settings personal to the user. One draw back of the foregoing is that the amount of users that can save settings is limited to the amount of buttons in the console. Other vehicles are configured to sense a particular key fob in the vicinity of the vehicle. Upon detecting the key fob, the saved settings personal to the user are restored. One drawback of using the key fob is that a key fob may be used by multiple users, thereby mitigating the convenience of having personal user settings.

## SUMMARY

**[0004]** In one aspect of the disclosure, a method for reinstating settings of at least one vehicle component of a vehicle is disclosed. The method comprises receiving a request to establish a communications link between a communications module of the vehicle and an external device associated with a user of the vehicle from the external device. The method further comprises retrieving settings of the at least one vehicle component of the vehicle from a data store associated with the at least one vehicle component based on the request to establish the communications link, wherein the data store resides in the vehicle. The method also comprises adjusting the settings of the at least one vehicle component based on the retrieved settings.

**[0005]** In another aspect of the disclosure, a system for reinstating settings of at least one vehicle component of a vehicle is disclosed. The system comprises a communications module that receives a request to establish a communications link between the communications module and an external device associated with a user of the vehicle from the external device, and that establishes the communications link between the communications module and the external link. The system further comprises at least one component module that retrieves settings of the at least one vehicle component of the vehicle from a data store associated with the at least one component module based on the request to establish the communications link and that adjusts the settings of the at least one vehicle component based on the retrieved settings. The data store resides in the vehicle

**[0006]** Further areas of applicability of the present disclosure will become apparent from the detailed description and claims provided hereinafter. It should be understood that the detailed description, including disclosed embodiments and drawings, are merely exemplary in nature intended for purposes of illustration only and are not intended to limit the scope of the invention, its application or use. Thus, variations that do not depart from the gist of the invention are intended to be within the scope of the invention.

## BRIEF DESCRIPTION OF THE DRAWINGS

**[0007]** FIG. **1** is a partial perspective view illustrating an interior of a vehicle and an external device in communication with a component of the vehicle;

**[0008]** FIG. **2** is a block diagram illustrating exemplary components of a user settings system;

**[0009]** FIGS. **3**A and **3**B are flow charts illustrating exemplary methods for retrieving the settings of a user;

**[0010]** FIGS. **4**A and **4**B are flow charts illustrating exemplary methods for storing the settings of a user; and

**[0011]** FIG. **5** is a block diagram illustrating an alternative embodiment of the user settings system.

## DETAILED DESCRIPTION

**[0012]** FIG. **1** illustrates an interior cabin of a vehicle **10** having a user settings system. The user settings system is configured to reinstate settings of at least one vehicle component of a vehicle **10**, wherein the settings are saved by a user of the vehicle **10**. Shown in the vehicle **10** are a number of vehicle components, whose settings may be adjusted. For instance, a user can adjust the settings of the audio/visual system **30** of the vehicle, the HVAC system **40** of the vehicle, one or more of the seats **50** of the vehicle, the lighting system (not shown) of the vehicle, and the mirrors **60** of the vehicle **10**. The user settings system reinstates a user's personal settings when an external device **20** associated with the user is detected in the vicinity of the vehicle. Typically, the external device **20** is considered detected when the external device **20** requests that a communications link be established between the external device **20** and a communications module of the vehicle **10**.

**[0013]** As discussed, one or more users can personalize settings of the various vehicle components and a user settings system can reinstate the personalized settings. FIG. **2** illustrates an exemplary user settings system **102**. The exemplary user settings system **102** includes a communications module **104** which establishes communication with the external device **100**. To establish a communications link with the communications module **104**, the external device **100** transmits a request to the communications module **104** that identifies the external device **100** to the communications module **104**. The communications module **104** uses the request from the external device **102** to determine that a user associated with the external device **100** is in the vehicle **10**. Based on this determination, the communications module **104** notifies various vehicle component modules, which adjust user settings of the vehicle components, that the user is in the vehicle **10**. For instance, the communications module **104** can notify an HVAC module **108**, a seat module **112**, an A/V module **116**, and a lighting module **120** that the identified user or external device **100** is in the vehicle **10**. It is appreciated that the set of

modules provided are exemplary and it is envisioned that other modules that control settings of vehicle components can be included in the user settings system **102**. For instance, a user can specify whether a horn chirp is desired when the doors are locked, whether the dome lights remain on for a predetermined amount of time after the motor of the vehicle **10** is shut off, or whether the windshield wipers are automatically activated upon detection of liquid on the windshield.

**[0014]** Upon receiving notification of the user or the external device **100**, each of the modules **104**, **112**, **116**, and **120**, will retrieve user settings corresponding to the user or external device **100** from a respective datastore. For instance, the HVAC module **108** will retrieve the HVAC settings of the user from an HVAC datastore **110** associated with the HVAC module **108**. The HVAC module **108** will then adjust the settings of the HVAC system **40** in accordance with the retrieved settings.

**[0015]** The components of the user settings system **102** are now described in greater detail. In an exemplary embodiment, the external device **100** is a Bluetooth® enabled mobile telephone **100**. It is appreciated that in the exemplary embodiments, the external device **100** can further be a laptop computer, a PDA, an MP3 player, or any other Bluetooth enabled device. One or more users can pair one or more mobile devices, e.g. mobile telephones, to a communications module **104** for the purposes of using a component of the vehicle **10** as a proxy for the mobile telephone **100**, e.g. hands free talking. In exemplary embodiments, the communications module **104** is a Bluetooth® receiver. It is envisioned, that the communications module **104** can be any other suitable receiver such as a Zigbee receiver, a wifi receiver, or a wimax receiver. The pairing of the external device **100** to the communications module **104** allows the communications module **104** to later recognize the external device **100** when the external device **100** requests to establish a communications link with the communications module **104**. Once a communications link is established, data is transferred via the communications link to the communications module **104** from the external device **100** and to the external device **100** from the communications module **104**.

**[0016]** One exemplary application of the communications link established between the mobile telephone **100** and the communications module **104** is hands free talking, wherein the user speaks into a microphone of the A/V system **30** coupled to the communications module **104** during a telephone call. The communications module **104** encodes the user's speech and transmits the digitally encoded voice signals to the mobile telephone **100** via the communications link. The mobile telephone **100** then transmits the encoded voice signals over a communications network to another telephone. Similarly, when the mobile telephone **100** receives encoded voice signals via the communications network, the mobile telephone **100** transmits the encoded signals to the communications module **104**, which outputs the received voice signal via speakers of an audio system in the vehicle **10**. While the example of hands free talking is provided, it is envisioned that the communications module **104** can be configured to support additional applications and the foregoing is merely provided for a common example of a Bluetooth application.

**[0017]** As discussed, the external device **100** is initially paired to the communications module **104**. In embodiments where the communications module **104** operates according to the Bluetooth® protocol, during the pairing state, the communications module **104** will generate and assign a key to the external device **100** and the external device **100** will verify the key. As used herein, the term key refers to any suitable code, password, passcode, or string used to authenticate a device. It is appreciated that any suitable means for generating a key can be used and the key can be formatted in any suitable fashion. The communications module **104** stores the key and a device identifier in a communications module datastore **106**. The communications module datastore **106** stores the keys and device identifiers for all external devices **100** paired with the communications module **104**. In some instances, the communications module datastore **106** can be further configured to associate a user identity with the device and/or key. Once the key is assigned to the external device **100** and agreed upon by the external device **100** and the communications module **104**, the external device **100** and the communications module **104** are considered paired. It is envisioned that any suitable pairing means can be used. For instance, legacy pairing or secure simple pairing can be implemented on the communications module **104**.

**[0018]** Once paired, a communications link can be established between the external device **100** and the communications module **104**. With respect to a Bluetooth communications link, the external device **100** is typically set to be "discoverable." When a device is set to be discoverable, another device, e.g. the communications module **104**, can detect the presence of the discoverable device. When the communications module **104** detects the presence of the external device **100** it will broadcast a signal via a transceiver associated with the communications module **104** indicating to the external device **100** that the external device **100** can synchronize with the communications module **104**. In response to the broadcast, the external device **100** will transmit to the communications module **104** a request to synchronize with the communications module **104**. The request will include the key of the external device **100** and a device identifier. The communications module **104** will receive the request and verify and/or authenticate the external device **100**. Once verified and/or authenticated, the communications module **104** will establish a communications link between the external device **100** and the communications module **104**.

**[0019]** As will be described, the user settings system **102** uses a request from an external device **100** to establish the communications link to determine an identity of the user or the device. In essence, the user settings system **102** piggybacks the request to establish a communications link into a request to reinstate the personal settings of the user associated with the external device **100**. In the embodiment depicted in FIG. **2**, the communications link receives the request and queries the communications module data store **106** with the device identifier. The communications module data store **106** returns the key. The communications module **104** checks the stored key with the key transmitted by the external device **100** during the request to establish a communications link. If the communications module **104** determines that the keys match, the external device **100** is authenticated.

**[0020]** Once the external device **100** is verified/authenticated, the communications module **104** transmits a signal via a communication bus in the vehicle **10** to at least one of the HVAC module **108**, the seat module **112**, the A/V module **116**, and the lighting module **120** notifying the modules that the external device **100** associated with the user is in the vicinity of the vehicle **10**. As mentioned, the list of modules provided in FIG. **2** is exemplary and are not intended to limit the modules that may be incorporated. Each of the HVAC

module **108**, the seat module **112**, the A/V module **116**, and the lighting module **120** has a data store corresponding thereto. The HVAC module **108** has an HVAC module datastore **110**, the seat module **112** has a seat module datastore **114**, the A/V module **116** has an A/V module datastore **118**, and the lighting module **120** has a lighting module **120** datastore. In an exemplary embodiment, the HVAC module datastore **110**, the seat module datastore **114**, the A/V module datastore **118**, and the lighting module **120** are comprised of EEPROM which is accessible to the respective module.

**[0021]** Each datastore stores parameter values relating to the user's personal settings. For instance, the HVAC module datastore **110** is organized such that one or more settings of the HVAC are associated with an external device **100** or the associated user of the external device **100**. For instance, a user may have a preferred temperature, fan speed, fan location, or other HVAC related settings stored in the HVAC module datastore **110**, whereby the personal settings are related to the external device **100** or the user associated thereto. Each of these settings may have a value such that when retrieved by the HVAC module **108**, the HVAC module **108** can determine what adjustments to make to the HVAC system **40** of the vehicle **10**. Once the HVAC module **108** receives notification that an external device **100** and/or the user is in the vicinity of the vehicle **10**, the HVAC module **108** will retrieve the HVAC settings associated with the user from the HVAC module datastore **110** and will adjust the HVAC system **40** in accordance with the settings. As discussed above, multiple users may drive the vehicle **10** so the HVAC module datastore **110** may store HVAC settings associated with multiple users or devices.

**[0022]** The seat module **112** controls the settings of the driver's seat **50** and optionally the other seats in the vehicle **10**. When the seat module **112** receives notification that the external device **100** and/or the user is in the vicinity of the vehicle **10**, the seat module **112** will retrieve the user's personal seat settings from the seat module datastore **114**. The user's personal seat settings can include but are not limited to the height of the seat **50**, the firmness of the seat **50**, the angle of the seat **50** back, the angle of the seat **50** back, and the distance of the seat **50** from the steering wheel. Once the seat module **112** retrieves the user's personal seat settings the seat module **112** will transmit a signal to a seat actuator (not shown) to adjust the settings of the driver seat **50** in accordance with the user's personal seat settings.

**[0023]** The A/V module **116** controls the settings of the vehicle's audio/visual system. The audio/visual system can be a radio, a radio with a touch screen, a radio with a navigation system, or any other audio visual system suitable for a vehicle **10**. When the A/V module **116** receives notification that the external device **100** or the user is in the vicinity of the vehicle **10**, the AV module **116** will retrieve the user's personal A/V settings from the A/V storage module **118**. The A/V settings may include playlists, volume control, preferences on the display, the manner in which the user interface **122** is displayed, the amount of data displayed on the screen of the audio visual system, stored radio stations, and other A/V system **30** related data. Once the A/V module **116** retrieves the stored settings from the NV storage module **118**, the A/V module **116** restores the settings of the audio/visual system according to the user's personal A/V settings. While the foregoing description provides a description of an audio/visual system, it is appreciated that the foregoing applies to an audio system as well.

**[0024]** The lighting module **120** controls the settings for the vehicle's lighting system. The lighting system can control the interior and/or exterior lights of the vehicle **10**. When the lighting module **120** receives notification that the external device **100** or the user is in the vicinity of the vehicle **10**, the lighting module **120** will retrieve the user's personal lighting settings from the lighting module data store **122**. The lighting settings may include colors of lights, which lights turn on when a door is opened, the duration that the lights remain on after the vehicle **10** has been turned off, and other lighting related settings. Once the lighting module **120** retrieves the stored settings from the lighting module data store **122**, the lighting module **120** restores the settings of the lighting system according to the user's personal lighting settings.

**[0025]** It is envisioned that other vehicle components can be controlled in the manner described above.

**[0026]** As shown, the user settings system **102** further includes a user interface **122**. The user interface **122** allows a user to interact with a component of the vehicle **10**. Most notably the user interface **122** may be integrated into the audio/visual system of the vehicle **10**, whereby a user can enter commands via an input device of the audio visual system, e.g. a touch screen on the radio of the vehicle **10**. When a user desires to store a setting, the user interface **122** displays a screen that prompts the user to store the current setting or settings. For instance, if a user changes the settings of the seat **50**, the user interface **122** displays a screen to the user asking whether the user would like the vehicle **10** to remember the seat settings. If the user responds affirmatively, the seat module **112** stores parameter values indicative of the current seat settings in the seat module datastore **114**. It is appreciated that the user interface **122** can be further configured such that the user can enter preferred user settings for various components of the vehicle **10** via the user interface **122**. For instance, the user interface **122** can display various components which the user can select from. Once the user selects a particular component, the user can enter preferred settings via the user interface **122**, or the controls of the vehicle component.

**[0027]** FIG. **3**A illustrates an exemplary method for restoring a user's personal settings, which is executed by the user settings system **102**. As discussed above, the communications module **104** can detect a discoverable external device **100** and broadcast to the device **100** that a connection is possible. If a device is not discoverable, the external device **100** will initiate a connection. In either scenario, the external device **100** will transmit a request to establish a communications link between the communications module **104** of the vehicle **10** and the external device **100** associated with a user of the vehicle **10** from the external device **100**, as shown at step **212**. The request will include a key and a device identifier. Once the communications module **104** receives the request to establish a communications link, the communications module **104** will verify/authenticate the external device **100** by checking the communications module datastore **106**, as shown at step **214**. The communications module **104** will verify that a device having the received device identifier and key is represented in the communications module datastore **106**. If so, the communications module **104** will establish a communications link with the external device **100**. Further, in the configuration shown in FIG. **2**, the communications module **104** will communicate the device identifier or an indicator thereof to the various vehicle components. Based on the device identifier, the vehicle components will retrieve the personal settings associated with the device identifier from an

associated datastore, as shown at step **216**. Alternatively and as will be discussed with respect to FIG. **5**, the device identifier can be communicated to a control module **424**, which retrieves the settings for the various components from a control module datastore **426** and will communicate the personal settings associated with the device identifier to the corresponding vehicle components. Once a vehicle component has received the personal settings, the vehicle component module will adjust the settings of the vehicle component in accordance with the personal settings associated with the device, as shown at step **218**. It is appreciated that in some embodiments, the user interface **122** may prompt the user to verify that the user desires to have the settings restored by the various vehicle components.

**[0028]** FIG. **3**B illustrates a variation of the method shown in FIG. **2**A. According to the method illustrated in FIG. **2**B, a user identifier is used to retrieve the settings rather than a device identifier. In these embodiments, a user can be associated with one or more devices. For instance, if a user has a personal mobile telephone, a laptop, and a work related mobile telephone, all three external devices **100** can be registered to the user. When the communications module **104** receives a request to establish a communications link with one of the listed external devices **100**, the communications module **104** will retrieve a user identity associated with the device identifier of the external device **100** requesting a communications link, as shown at step **254**. The user identity can be communicated to the various vehicle components (FIG. **2**) or a control module (FIG. **5**). Based on the user identity, the preferred user settings are retrieved from the data stores of the vehicle components (FIG. **2**) or from a control module datastore (FIG. **5**), as shown at step **256**. The various vehicle components will then adjust the respective settings in accordance with the stored personal settings associated with the user, as shown at step **258**. It is appreciated that in some embodiments, the user interface **122** may prompt the user to verify that the user desires to have the settings restored by the various vehicle components.

**[0029]** FIG. **4**A illustrates a method that is executed by an exemplary user settings system when registering a new external device **100** or user. As discussed above, the communications module **104** learns a device for later communication, as shown at step **312**. In the context of a Bluetooth® receiver, the communications module **104** will pair with the device **100**. Pairing with the device includes generating and assigning a unique key to the external device **100**, as shown at step **214**. The communications module **104** will communicate the key to the device **100** and the device **100** will verify the key by transmitting the key back to the communications module. Once the key is assigned to the device **100**, the communications module stores the key, as well as a device identifier and/or a user identifier in a datastore.

**[0030]** Once a device identifier or user has been associated with the external device **100**, the user settings system **102** can begin storing settings corresponding to the external device **100**. This can occur in any suitable fashion. For instance, the user can set various settings in the vehicle **10**, as shown at step **316** and can command the user settings system to store the settings, as shown at step **318**, via the user interface **122**. Alternatively, the user can be prompted by the user interface **122** to set his or her personal settings. Once the user has entered a setting for a vehicle component, the user can be prompted by the user interface **122** to determine if a particular setting should be saved. If the user responds affirmatively, the user's personal setting is stored in a datastore, as shown at step **318**. Further, the user's personal setting is associated with the device identifier or a user identifier, as shown at step **320**. This can be achieved by relating a parameter value indicative of the setting being stored to the device identifier or the user identifier in the data store. If more settings remain, the method will continue to execute, as shown at step **322**. If, however, the user does not wish to store any more settings, the method ends, as shown at step **324**.

**[0031]** FIG. **4**B illustrates an exemplary method that is executed by the user settings system after a device has been learned by the user settings system. As can be appreciated, a user may opt to change or add his or her personal settings after some time. As discussed above, the external device **100** will request to establish a communications link, and the communications module **104** will receive the request and verify and/or authenticate the external device **100**, as shown at steps **352** and **354**. The user at any given time may opt to change the settings of one or more of the vehicle components, as shown at step **356**. If the user does so, the user may be prompted by the user interface **122** to indicate if the adjusted settings of the one or more vehicle components are to be saved. If the user responds affirmatively, the adjusted settings are saved in a datastore associated with the vehicle component, as shown at step **358**. Further, the new settings are associated with the device identifier or the user identifier in the datastore for later retrieval, as shown at step **358**. If the user has changed more than one setting, the method continues to reiterate, as shown at step **362**, until no more settings are to be saved. Once there are no more settings to be saved, the method will stop executing, as shown at step **364**.

**[0032]** It is appreciated that the methods explained above are exemplary, and variations thereof are further contemplated.

**[0033]** FIG. **5** illustrates an alternative configuration of a user settings system **402**. In this configuration, the communications module **404** communicates with a control module **424**, which is coupled to a central data store **406**. The central data store stores data for validating and/or authenticating a device, the value parameters associated with the various devices or users having preferred settings stored, and any other data used by the user settings system **402**. In these embodiments, the communications module **404** receives a request to establish a communications link from an external device **400**, including a key and a device identifier. The communications module **404** communicates the key and the device identifier to the control module **424**, which verifies and/or authenticates the device by checking for the key/device combination in the central data store **406**. Once the external device **400** is verified/authenticated, the control module **424** notifies the communications module **404** that a communications link can be established. Further, the control module **424** retrieves the preferred user settings of the user from the central data store **406**. The control module **424** then communicates the preferred user settings to the appropriate vehicle component modules, e.g. the HVAC module **408**, the seat module **412**, the A/V module **416**, and the lighting module **420**. It is appreciated that the control module **424** communicates with the communications module and the various vehicle component modules via a communications bus.

**[0034]** As can be appreciated, a plurality of users may use the vehicle **10**. Thus, the user settings system can be configured to resolve conflicts if more than one external device **100** is detected in the vehicle. One way is to rank the devices by

the order in which they were registered. Thus, an earlier registered device is given priority over a newer device. Another way to rank the devices is to have the user provide an order for the devices. This can be entered using the user interface **122**. In either scenario, a priority list can be stored in a computer readable medium associated with the user settings system such that when two devices are encountered priority is initially given to the device having a higher priority. Additionally or alternatively, the user interface **122** can present the user with a list of detected devices/users and the user can select a device/user from the plurality of listed devices/users. This can be done via the user interface **122** or by voice command.

**[0035]** The following description is merely illustrative in nature and is in no way intended to limit the disclosure, its application, or uses. It should be understood that steps within a method may be executed in different order without altering the principles of the present disclosure. The broad teachings of the disclosure can be implemented in a variety of forms. Therefore, while this disclosure includes particular examples, the true scope of the disclosure should not be so limited since other modifications will become apparent to the skilled practitioner upon a study of the drawings, the specification, and the following claims.

**[0036]** As used herein, the term module may refer to, be part of, or include an Application Specific Integrated Circuit (ASIC); an electronic circuit; a combinational logic circuit; a field programmable gate array (FPGA); a processor (shared, dedicated, or group) that executes code; other suitable components that provide the described functionality; or a combination of some or all of the above, such as in a system-on-chip. The term module may include memory (shared, dedicated, or group) that stores code executed by the processor.

**[0037]** The term code, as used above, may include software, firmware, and/or microcode, and may refer to programs, routines, functions, classes, and/or objects. The term shared, as used above, means that some or all code from multiple modules may be executed using a single (shared) processor. In addition, some or all code from multiple modules may be stored by a single (shared) memory. The term group, as used above, means that some or all code from a single module may be executed using a group of processors. In addition, some or all code from a single module may be stored using a group of memories.

**[0038]** The apparatuses and methods described herein may be implemented by one or more applications executed by one or more processors. The applications include processor-executable instructions that are stored on a non-transitory tangible computer readable medium. The applications may also include stored data. Non-limiting examples of the non-transitory tangible computer readable medium are nonvolatile memory, magnetic storage, and optical storage.

What is claimed is:

**1**. A method for reinstating settings of at least one vehicle component of a vehicle, the method comprising:

receiving a request to establish a communications link between a communications module of the vehicle and an external device associated with a user of the vehicle from the external device;

retrieving settings of the at least one vehicle component of the vehicle from a data store associated with the at least one vehicle component based on the request to establish the communications link, wherein the data store resides in the vehicle; and

adjusting the settings of the at least one vehicle component based on the retrieved settings.

**2**. The method of claim **1** further comprising determining an identity of the user from the request to establish the communications link and retrieving the settings of the at least one vehicle component vehicle from the data store based on the identity of the user.

**3**. The method of claim **2** further comprising associating a current setting of the at least one vehicle component to the identity of the user, associating the external device to the user, and storing the current setting in the data store such that the current setting corresponds to the user.

**4**. The method of claim **1** further comprising determining an identity of the external device from the request to establish the communications link and retrieving the settings of the at least one vehicle component from the data store based on the identity of the external device.

**5**. The method of claim **4** further comprising associating a current setting of the at least one vehicle component to the determined identity of the external device and storing the current setting in the data store such that the current setting corresponds to external device.

**6**. The method of claim **4** wherein the identity of the external device is determined from a key assigned to the external device by the communications module, and wherein the key is communicated by the external device to the communications module in the request to establish communication.

**7**. The method of claim **1** wherein the external device is one of a mobile telephone, a personal digital assistant, a laptop computer and a MP3 player.

**8**. The method of claim **1** wherein the communications link is a Bluetooth connection and the request to establish a communications link is a request to synchronize the external device with the communications module.

**9**. The method of claim **1** wherein the at least one vehicle component includes at least one of a driver seat, an HVAC system, an audio visual system, and a lighting system.

**10**. A user settings system for reinstating settings of at least one vehicle component of a vehicle, comprising:

a communications module that receives a request to establish a communications link between the communications module and an external device associated with a user of the vehicle from the external device, and that establishes the communications link between the communications module and the external link; and

at least one component module that retrieves settings of the at least one vehicle component of the vehicle from a data store associated with the at least one component module based on the request to establish the communications link and that adjusts the settings of the at least one vehicle component based on the retrieved settings, wherein the data store resides in the vehicle.

**11**. The system of claim **10** wherein the communications module determines an identity of the user from the request to establish the communications link and the at least one component module retrieves the settings of the at least one vehicle component vehicle from the data store based on the identity of the user.

**12**. The system of claim **11** wherein the communications module associates a current setting of the at least one vehicle component to the identity of the user, associates the external

device to the user, and stores the current setting in the data store such that the current setting corresponds to the user.

**13**. The system of claim **10** wherein the communications module determines an identity of the external device from the request to establish communication and retrieves the settings of the at least one vehicle component vehicle from the data store based on the identity of the external device.

**14**. The system of claim **13** wherein the communications module associates a current setting of the at least one vehicle component to the identity of the external device and stores the current setting in the data store such that the current setting corresponds to external device.

**15**. The system of claim **13** wherein the identity of the external device is determined from a key assigned to the external device by the communications module, and wherein the key is communicated by the external device to the communications module in the request to establish communication.

**16**. The system of claim **10** wherein the external device is one of a mobile telephone, a personal digital assistant, a laptop computer and a MP3 player.

**17**. The system of claim **10** wherein the communications link is a Bluetooth connection and the request to establish a communications link is a request to synchronize the external device with the communications module.

**18**. The system of claim **10** wherein the at least one vehicle component is at least one of a driver seat, an HVAC system, an audio visual system, and a lighting system.

* * * * *