US011713209B2

(12) **United States Patent**
Pearson

(10) **Patent No.: US 11,713,209 B2**
(45) **Date of Patent: Aug. 1, 2023**

(54) **GLOW FISH TAPE SYSTEM**

(71) Applicant: **Klein Tools, Inc.**, Lincolnshire, IL (US)

(72) Inventor: **Daniel R. Pearson**, Fortworth, TX (US)

(73) Assignee: **Klein Tools, Inc.**, Lincolnshire, IL (US)

(*) Notice: Subject to any disclaimer, the term of this patent is extended or adjusted under 35 U.S.C. 154(b) by 672 days.

(21) Appl. No.: **16/696,383**

(22) Filed: **Nov. 26, 2019**

(65) **Prior Publication Data**

US 2021/0155445 A1 May 27, 2021

(51) **Int. Cl.**
B65H 75/40 (2006.01)
H02G 11/02 (2006.01)

(52) **U.S. Cl.**
CPC ***B65H 75/406*** (2013.01); ***H02G 11/02*** (2013.01); *B65H 2701/376* (2013.01)

(58) **Field of Classification Search**
CPC B65H 75/00; B65H 75/02; B65H 75/34; B65H 75/36; B65H 75/362; B65H 75/364; B65H 75/38; B65H 75/40; B65H 75/406; B65H 2701/00; B65H 2701/30; B65H 2701/37; B65H 2701/376; H02G 11/00; H02G 11/006; H02G 11/02; H02G 11/06; H02G 11/08; H02G 11/083; H02G 11/085
USPC ..... 254/134.3 R, 134.3 FT
See application file for complete search history.

(56) **References Cited**

U.S. PATENT DOCUMENTS

3,601,330 A * 8/1971 Minobe H02G 11/02 242/405.1
6,293,519 B1 9/2001 Farretta
6,433,703 B1 * 8/2002 Tucker A01K 89/0102 340/815.5
2004/0206529 A1 10/2004 Sawyer et al.
2005/0062028 A1 * 3/2005 Konen ..... H02G 11/02 254/134.3 FT
2006/0065883 A1 * 3/2006 Radle ..... H02G 11/02 254/134.3 FT
2009/0257221 A1 * 10/2009 Patterson H02G 1/081 362/362
2015/0330771 A1 * 11/2015 Moffatt G01B 11/022 356/634
2017/0213431 A1 7/2017 Huo
2019/0292005 A1 * 9/2019 Miller B65H 75/4428

FOREIGN PATENT DOCUMENTS

EP 1914508 A2 4/2008
JP 2001-174202 A 6/2001

OTHER PUBLICATIONS

United Kingdom Intellectual Property Office, Search Report in United Kingdom Patent Application No. GB2018458.6, 4 pp. (dated Apr. 23, 2021).

* cited by examiner

Primary Examiner — Hoai-An D. Nguyen

(57) **ABSTRACT**

A fish tape system includes a fish tape and a case having a storage compartment that stores the fish tape for deployment from the case. The fish tape has a length extending from a first end to a second end. The length includes a luminescent material that emits light after being energized by exposure to a light source. At least a portion of the case is transparent to allow the luminescent material **22** to be energized by light passing through the transparent portion and into the storage compartment.

18 Claims, 4 Drawing Sheets

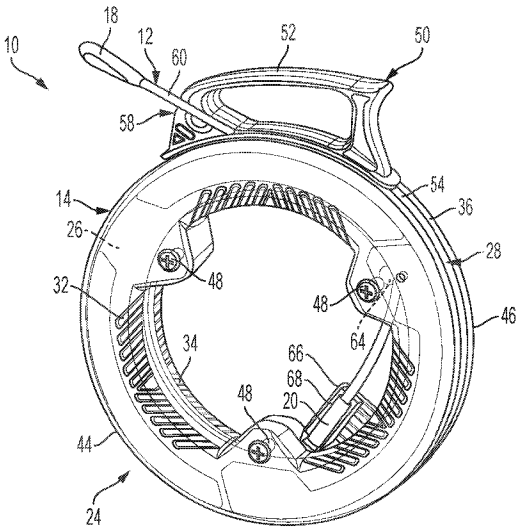

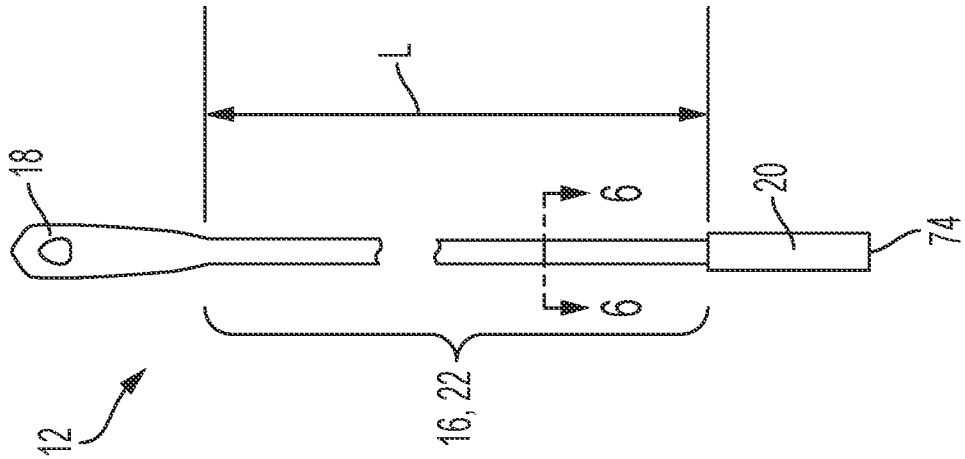
L
18
6
6
20
74
12
16, 22

FIG. 2

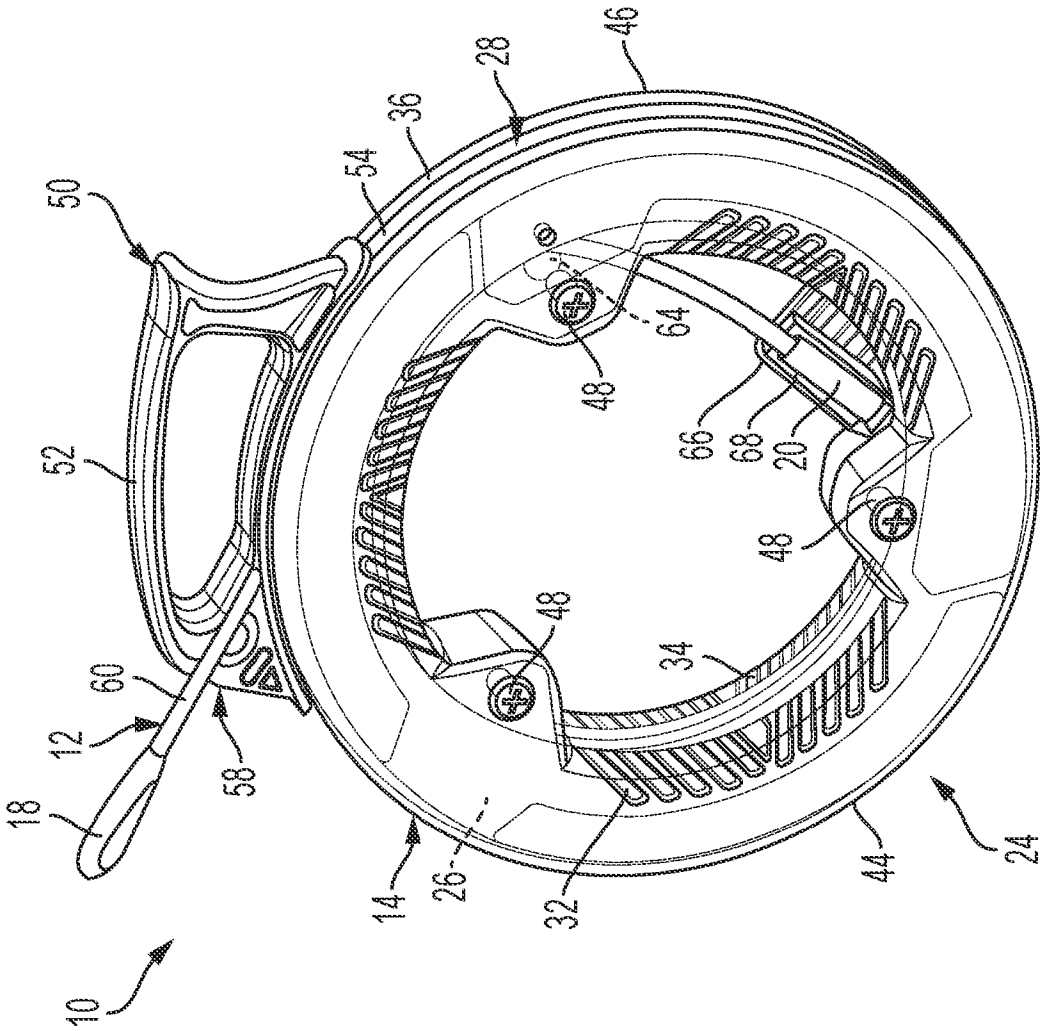
46
28
36
54
50
64
48
66
68
20
52
48
48
34
60
12
58
18
14
26
32
44
24
10

FIG. 1

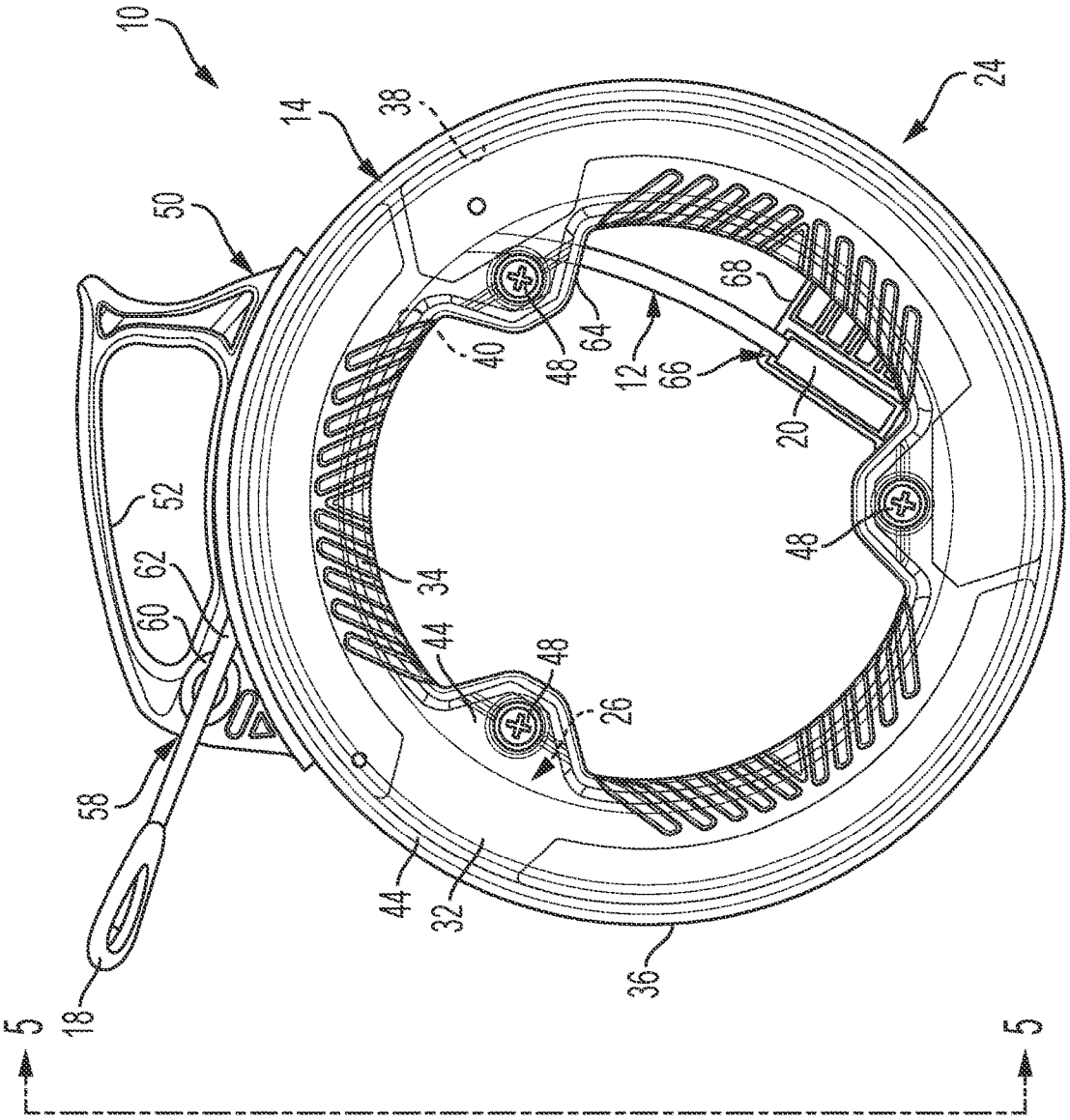
10
14
38
24
50
68
64
48
40
12
66
20
52
62
60
34
44
48
26
58
44
32
36
18
5
5

FIG. 3

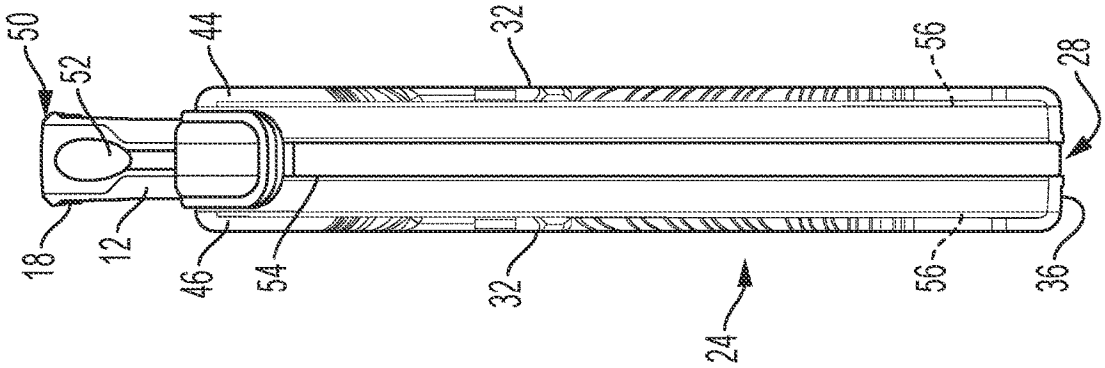
50
52
18
12
44
46
54
32
32
24
56
56
28
36

FIG. 5

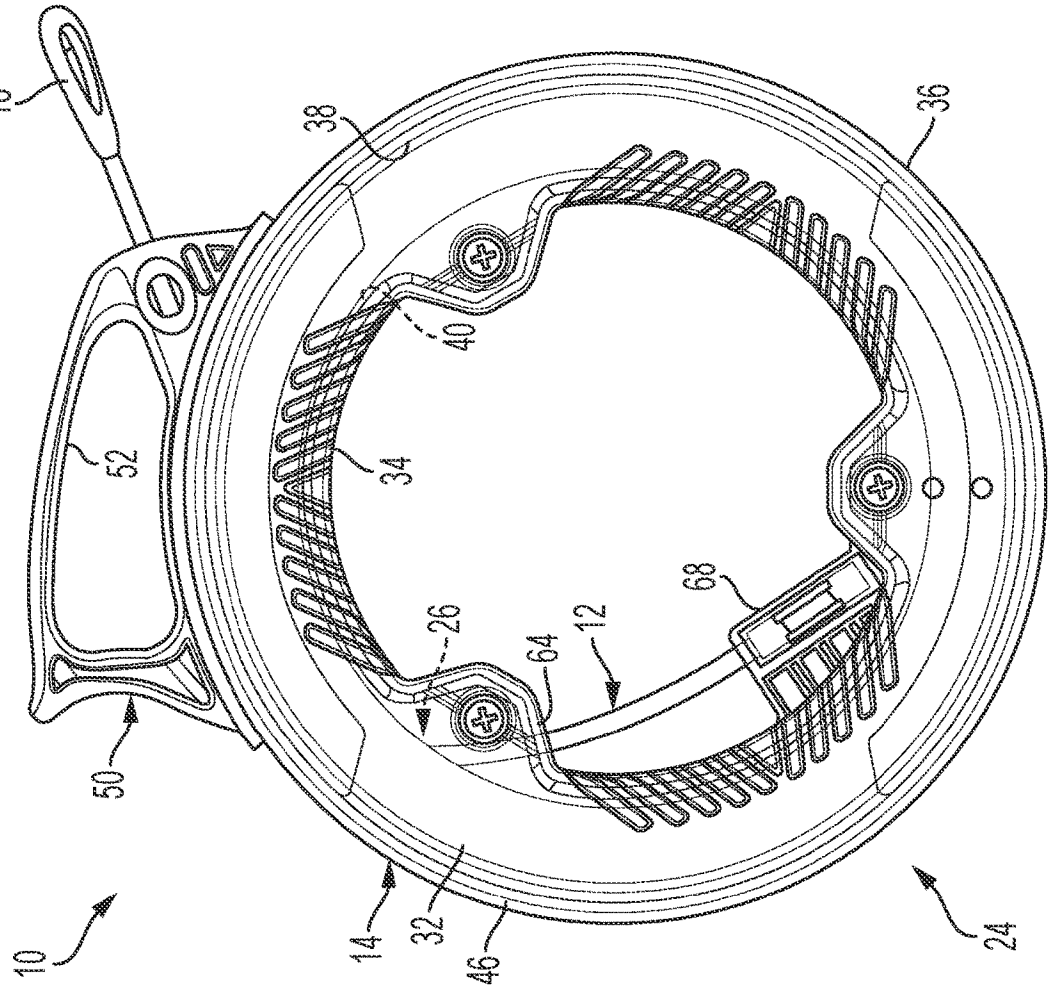
18
38
36
40
34
52
26
64
12
68
50
10
14
32
46
24

FIG. 4

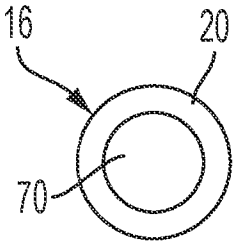

FIG. 6A

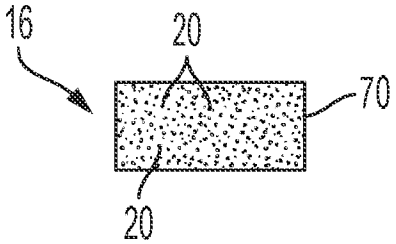

FIG. 6B

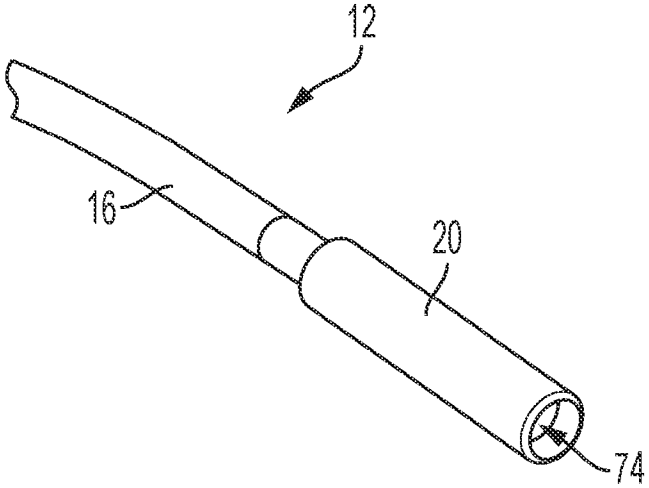

FIG. 7

GLOW FISH TAPE SYSTEM

CROSS-REFERENCE TO RELATED APPLICATIONS

None

BACKGROUND OF THE DISCLOSURE

The present disclosure relates fish tapes that are deployed from a case that stores the fish tape when the fish tape is not in use. Most current fish tapes of this type utilize a case that deploys the fish tape from an annular slot, typically in an outer perimeter of the case, with at least a portion of the fish tape being retained in the case during use. Fish tapes are typically made of nylon, fiberglass, nylon jacketed fiberglass, or a suitable metal, such as stainless steel or tempered spring steel or multi-stranded steel wire, with the fish tape having sufficient stiffness to be pushed through a conduit or other enclosed space while being sufficiently flexible to flex around bends or corners in the conduit or other enclosed space. Fish tapes are provided in a variety of sizes and lengths, with the commercially available lengths typically being provided in the range of 20 feet to 240 feet.

Such fish tapes are used to pull electrical wires and fiber optic cables through conduit or into enclosed wall space and there are commercially available light emitting tips that can be connected to the end of the fish tape to improve the ability of a user to see the fish tape as it is moving near an opening through which a user wishes to pull electrical wire or fiber optic cable. While such fish tapes, cases and tips work well for their intended purpose, there is always room for improvement. For example, the light emitting tips are not as effective if the tip has already moved past the opening through which a user wants to pull the electrical wire or fiber optic cable.

BRIEF SUMMARY OF THE DISCLOSURE

In accordance with one feature of this disclosure, a fish tape system includes a fish tape and a donut shaped case. The fish tape has a length extending from a first end to a second end, and the length of the fish tape includes a luminescent material that emits light after being energized by exposure to a light source. The donut shaped case has a pair of sidewalls extending between a radially innermost wall and a radially outermost wall. The sidewalls are spaced from each other to define a fish tape storage compartment that stores the length of fish tape for deployment via the annular opening in the case. The case further includes an annular opening extending around a circumference of one of the inner and outer walls. At least a portion of the case is transparent to allow the luminescent material to be energized by light passing through the portion.

As one feature, the outermost wall has the annular opening extending around a circumference of the outer wall, and at least one of the sidewalls of the case is transparent to allow the luminescent material to be energized by light passing through the at least one of the sidewalls.

In one feature, both of the sidewalls of the case are transparent to allow the luminescent material to be energized by light passing through the sidewalls.

According to one feature, at least one of the innermost and outermost walls is transparent to allow the luminescent material to be energized by light passing through the sidewalls.

As one feature, one of the sidewalls and portions of the innermost and outermost walls are defined by a first component of the case, and the other of the sidewalls and other portions of the innermost and outermost walls are defined by a second component of the case. The first and second components are assembled together to form the storage compartment. In a further feature, at least one of the first and second components includes a transparent material. In yet a further feature, both of the first and second components includes a transparent material.

In one feature, the fish tape system further includes a handle engaged with the case for sliding movement along a circumference of one of the inner and outer walls, the handle engageable with the fish tape to deploy the fish tape from the storage compartment and to reload the fish tape into the compartment.

According to one feature, the fish tape system further includes a handle engaged with the case for sliding movement along a circumference of the outer wall. The handle is engageable with the fish tape to deploy the fish tape from the storage compartment and to reload the fish tape into the compartment.

As one feature, the fish tape further includes a threaded opening in at least one of the first and second ends.

In one feature, at least a portion of at least one of the sidewalls of the case is transparent to allow the luminescent material to be energized by light passing through the at least one of the sidewalls.

According to one feature, at least portions of both of the sidewalls of the case are transparent to allow the luminescent material to be energized by light passing through the sidewalls.

As one feature, at least portions of all the walls of the case are transparent.

In accordance with one feature, a fish tape system includes a fish tape and a case. The fish tape has a length extending from a first end to a second end, and the length of the fish tape includes a luminescent material that emits light after being energized by exposure to a light source. The case has a fish tape storage compartment that stores the length of fish tape for deployment and reloading via an opening in the case. At least a portion of the case is transparent to allow the luminescent material to be energized by light passing through the portion and into the storage compartment.

As one feature, the storage compartment has an annular shape bounded by a pair of spaced sidewalls. According to further feature, at least a portion of at least one of the sidewalls is transparent. In yet a further feature, portions of both of the sidewalls are transparent.

In one feature, the case includes a pair of components that are joined to each other to define the storage compartment, and at least one of the pair of components includes a transparent material.

It should be understood that the inventive concepts disclosed herein do not require each of the features discussed above, may include any combination of the features discussed, and may include features not specifically discussed above.

BRIEF SUMMARY OF THE SEVERAL VIEWS OF THE DRAWINGS

FIG. **1** is a view is a perspective view from above and to the left of a fish tape system according to this disclosure;

FIG. **2** is a plan view of a fish tape of the fish tape system shown in FIG. **1**, with the fish tape removed from a case of the system and with a portion of the fish tape broken away for purposes of illustration;

FIG. **3** is a left side elevation view of the fish tape system of FIG. **1**;

FIG. **4** is a right side elevation view of the fish tape system of FIGS. **1** and **3**;

FIG. **5**, is a view taken from line **5-5** in FIG. **3**;

FIGS. **6**A and **6**B are enlarged views taken from line **6-6** in FIG. **2** and show alternate embodiments of the fish tape shown in FIG. **2**; and

FIG. **7** is an enlarged perspective view showing an end configuration for a fish tape according to this disclosure.

DETAILED DESCRIPTION OF PREFERRED EMBODIMENTS

As seen in FIGS. **1-5**, a fish tape system **10** is provided and includes a fish tape **12** and a case **14**. As best seen in FIG. **2**, the fish tape **12** has a length **16** extending from a first end **18** to a second end **20**. The length **16** includes a luminescent material **22** that emits light after being energized by exposure to a light source **24**, such as the sun or a light emitting element. The case **14** has a fish tape storage compartment **26** that stores the fish tape **12** for deployment via an opening **28** in the case **14**. At least a portion of the case **14** is transparent to allow the luminescent material **22** to be energized by light passing through the transparent portion and into the storage compartment **26**.

In the illustrated embodiment, the case **14** is donut shaped and includes a pair of sidewalls **32** (best seen in FIG. **5**) extending between a radially innermost wall **34** and a radially outermost wall **36**. The wall **36** includes the opening **28** in the form of an annular opening **28** extending around the entire circumference of the wall **36**. The sidewalls **32** are spaced from each other, and in combination with inwardly facing annular surfaces **38** and **40** of the walls **34** and **36**, respectively, define the storage compartment **26** with an annular shape. As best seen in FIGS. **1** and **5**, the illustrated and preferred case **14** is an assembly of two, half-case components **44** and **46** that are joined to each other using threaded fasteners **48**. Each of the components **44** and **46** define one of the sidewalls **32** and approximately one-half of each of the walls **34** and **36** and are preferably molded using a suitable process, such as injection molding. The annular opening **28** is defined between each portion of the wall **36** defined by each of the components **44** and **46**. Such constructions for donut shaped fish tape cases are well known, with a few examples of such commercially cases being offered by Ideal Electronics under model numbers 31-542, 31-056, and 31-064; by Gardner Bender under model numbers FTS-125R, FTS-250R, and FTS-50B; and Klein Tools under model numbers 56001, 56014, 56002, and 56005.

In the illustrated and highly preferred embodiment, the walls **32**, **34** and **36** are all transparent to allow the luminescent material **22** to be energized by light passing into the compartment **26** through the wall **32**, **34**, and **36**. In this regard, the components **44** and **46** can be molded from any suitable material, such a suitable polymeric/plastic/composite material. Non-limiting examples of suitable materials include: polycarbonate, polypropylene, and Acrylonitrile butadiene styrene (ABS).

The illustrated and preferred embodiment of the system **10** also includes a winding handle **50** that is mounted to slide within the annular opening **28** around the entire circumference of the wall **36**. The handle **50** includes a grip **52** and a hoop or ring **54**. As best seen in FIG. **5**, the ring **54** has oppositely facing annular ribs **56**, with each rib received in a corresponding annular channel in a corresponding one of the half-case components **44** and **46** for guided, sliding movement around the entire circumference of the wall **36**. As best seen in FIG. **3**, the grip **52** includes a tape guide portion **58** having a linear slot **60** that receives and guides the fish tape **12** has it is deployed from and wound into the compartment **26** via an opening **62** that extends through the ring **54**. The features **52**, **54**, **56**, **58**, **60** and **62** are well known and employed in commercially available fish tape systems.

It is highly preferred that system **10** be configured to allow the fish tape **12** to be easily removed from the case **14** for use and then rewound into the case **14** after use. In the illustrated and novel embodiment, this is achieved by sizing the slot **60** and opening **62** to allow the end **20** to be readily removed from the case **14** and reinserted into the case **14**, by providing an opening **64** in the wall **34** that allows the end **20** to readily pass through the wall **34**, and by providing the case **14** with an anchor slot **66** that provide a snap-fit with the end **20** to allow the end **20** to be releasably retained in the slot **66**. In the illustrated embodiment, the slot **66** is defined in a boss **68** that is formed as an integral, unitary part of the half-case component **46**.

The length **16** of the fish tape **12** is formed from a structural member **70** that extends over the entire length **16**. The structural member **70** can be a flexible strip of metal, a multi-strand metallic wire, or a cord or rope of nylon, fiberglass, or other flexible, high tensile strength material. The luminescent material **22** can be provided in any suitable form and preferably extends over the entire length **16**, such as, for example, in the form of a luminescent coating that includes the material **20**, such as a paint, on the structural member **70** that extends over the entire length **16** (shown in FIG. **2**); a luminescent sheath/jacket that includes the material **20** and surrounds the structural member **70** extending over the entire length **16** (shown in FIG. **6**A); or in the form as an integral component of the material that forms the structural member **70** (shown in FIG. **6**B). Non-limiting examples of suitable materials for the luminescent material **22** include: strontium aluminate, zinc sulfide, or either of those materials blended with a base material, such as nylon, polyethylene, and/or polyethylene terephthalate (PET).

Each end **18** and **20** of the fish tape **12** may be provided in any suitable form and/or configuration, many of which are known, to allow or assist a user in the attachment of an electrical wire or optic cable or in the grasping of the fish tape **12** during a pulling or pushing operation. Non-limiting examples of suitable forms/configurations for the ends **18** and **20** include eyelet ends (shown in FIGS. **1-4** for end **18**), hook shaped ends, no-snag plastic tips, bullet ends, mini-eyelet ends, domed-eyelet ends, claw ends, male threaded connector ends, or female threaded connector ends, all of which are well known in commercially available fish tape systems and fish rod systems. FIGS. **1-4** and **7** shows an embodiment wherein the **20** has a threaded connector in the form of a female threaded opening **74**.

Preferred embodiments of the inventive concepts are described herein, including the best mode known to the inventor(s) for carrying out the inventive concepts. Variations of those preferred embodiments will become apparent to those of ordinary skill in the art upon reading the foregoing description. The inventor(s) expect skilled artisans to employ such variations as appropriate, and the inventor(s) intend that the inventive concepts can be practiced otherwise than as specifically described herein.

Accordingly, the inventive concepts disclosed herein include all modifications and equivalents of the subject matter recited in the claims appended hereto as permitted by applicable law. Moreover, any combination of the above-described elements and features in all possible variations thereof is encompassed by the inventive concepts unless otherwise indicated herein or otherwise clearly contradicted by context. Further in this regard, while highly preferred forms of the fish tape system **10** are shown in the figures, it should be understood that this disclosure anticipates variations in the specific details of each of the disclosed components and features of the fish tape system **10** and that no limitation to a specific form, configuration, or detail is intended unless expressly and specifically recited in an appended claim.

For example, while specific and preferred forms have been shown for the case **14**, in some applications other forms and configurations for the case **14** may be employed. For example, in some applications it may be desirable for just one of the side walls **32** to be transparent, with the other side wall **32** and the other walls **34** and **36** being opaque. As another example, it may be desirable for just a portion of one of the walls **32**, **34**, and/or **36** to be transparent. As yet another example, while it is preferred for the annular opening **28** to be provided in the radially outermost wall, in some applications it may be desirable for the annular opening **28** to be provide in the radially innermost wall **34**. As another example, while an annular opening **28** is preferred, in some applications a different opening configuration/shape may be desired. In another example, while the two half-case components **44** and **46** preferred, in some embodiments it may be desirable to form the case **14** from a different configuration of components or a different number of components. Similarly, while the donut shape is a preferred form for the case **14**, in some applications it may be desirable for the case **14** to have a different shape. As yet another example, while the disclosed configuration for the handle **50** is preferred, in some applications it may be desirable to utilize other configurations, many of which are known, for a winding handle. Similarly, in some applications it may be desirable for the system **10** to not have any type or configuration of winding handle. In a further example, while the opening **64**, anchor slot **64** and boss **66** are preferred, in some application it may be desirable for these features to be eliminated and/or for replaced with other features to attach or anchor the end **20** in the case **14**. In another example, while circular and rectangular cross sections have been shown for the fish tape **12**, other cross sections may be desirable depending upon the specific application and/or material(s) used for the fish tape **12**.

The use of the terms "a" and "an" and "the" and "at least one" and similar referents in the context of describing the invention (especially in the context of the following claims) are to be construed to cover both the singular and the plural, unless otherwise indicated herein or clearly contradicted by context. The use of the term "at least one" followed by a list of one or more items (for example, "at least one of A and B") is to be construed to mean one item selected from the listed items (A or B) or any combination of two or more of the listed items (A and B), unless otherwise indicated herein or clearly contradicted by context. The terms "comprising," "having," "including," and "containing" are to be construed as open-ended terms (i.e., meaning "including, but not limited to,") unless otherwise noted. The use of any and all examples, or exemplary language (e.g., "such as") provided herein, is intended merely to better illuminate the inventive concepts disclosed herein and does not pose a limitation on the scope of any invention unless expressly claimed. No language in the specification should be construed as indicating any non-claimed element as essential to the practice of the inventive concepts disclosed herein.

All references, including publications, patent applications, and patents, cited herein are hereby incorporated by reference to the same extent as if each reference were individually and specifically indicated to be incorporated by reference and were set forth in its entirety herein.

What is claimed is:

1. A fish tape system comprising:

a fish tape having a length extending from a first end to a second end, the length of the fish tape comprising a luminescent material that emits light after being energized by exposure to a light source;

a donut shaped case having a pair of sidewalls extending between a radially innermost wall and a radially outermost wall, the outermost wall having an annular opening extending around a circumference of the outer wall, the sidewalls being spaced from each other to define a fish tape storage compartment that stores the length of fish tape for deployment via the annular opening in the case; and

a handle engaged with the fish tape and mounted to slide within the annular opening of the case around the entire circumference of the outer wall to deploy the fish tape from the storage compartment and to reload the fish tape into the compartment;

wherein at least one of the sidewalls of the case is transparent to allow the luminescent material to be energized by light passing through the at least one of the sidewalls.

2. The fish tape system of claim **1** wherein both of the sidewalls of the case are transparent to allow the luminescent material to be energized by light passing through the sidewalls.

3. The fish tape system of claim **2** wherein at least one of the innermost and outermost walls is transparent to allow the luminescent material to be energized by light passing through the sidewalls.

4. The fish tape system of claim **1** wherein one of the sidewalls and portions of the innermost and outermost walls are defined by a first component of the case, and the other of the sidewalls and other portions of the innermost and outermost walls are defined by a second component of the case, the first and second components being assembled together to form the storage compartment.

5. The fish tape system of claim **1** wherein the fish tape further comprises a threaded opening in at least one of the first and second ends.

6. A fish tape system comprising:

a fish tape having a length extending from a first end to a second end, the length of the fish tape comprising a luminescent material that emits light after being energized by exposure to a light source;

a donut shaped case having a pair of sidewalls extending between a radially innermost wall and a radially outermost wall, an annular opening extending around a circumference of one of the inner and outer walls, the sidewalls being spaced from each other to define a fish tape storage compartment that stores the length of fish tape for deployment via the annular opening in the case; and

a handle engaged with the fish tape and mounted to slide within the annular opening of the case around the entire

circumference to deploy the fish tape from the storage compartment and to reload the fish tape into the compartment;

wherein at least a portion of the case is transparent to allow the luminescent material to be energized by light passing through the portion.

7. The fish tape system of claim **6** wherein the fish tape further comprises a threaded opening in at least one of the first and second ends.

8. The fish tape system of claim **6** wherein at least a portion of at least one of the sidewalls of the case is transparent to allow the luminescent material to be energized by light passing through the at least one of the sidewalls.

9. The fish tape system of claim **6** wherein at least portions of both of the sidewalls of the case are transparent to allow the luminescent material to be energized by light passing through the sidewalls.

10. The fish tape system of claim **6** wherein at least portions of all the walls of the case are transparent.

11. The fish tape system of claim **6** wherein one of the sidewalls and portions of the innermost and outermost walls are defined by a first component of the case, and the other of the sidewalls and other portions of the innermost and outermost walls are defined by a second component of the case, the first and second components being assembled together to form the storage compartment.

12. The fish tape system of claim **11** wherein at least one of the first and second components comprises a transparent material.

13. The fish tape system of claim **11** wherein both of the first and second components comprises a transparent material.

14. A fish tape system comprising:

a fish tape having a length extending from a first end to a second end, the length of the fish tape comprising a luminescent material that emits light after being energized by exposure to a light source;

a case having a fish tape storage compartment that stores the length of fish tape for deployment and reloading via an annular opening in the case; and

a handle engaged with the fish tape and mounted to slide within the annular opening of the case around an entire circumference of the annular opening to deploy the fish tape from the storage compartment and to reload the fish tape into the compartment;

wherein at least a portion of the case is transparent to allow the luminescent material to be energized by light passing through the portion and into the storage compartment.

15. The fish tape system of claim **14** wherein the storage compartment has an annular shape bounded by a pair of spaced sidewalls.

16. The fish tape system of claim **15** wherein at least a portion of at least one of the sidewalls is transparent.

17. The fish tape system of claim **16** wherein portions of both of the sidewalls are transparent.

18. The fish tape system of claim **14** wherein the case comprises a pair of components that are joined to each other to define the storage compartment, and at least one of the pair of components comprises a transparent material.

* * * * *