UNITED STATES PATENT AND TRADEMARK OFFICE

UNITED STATES DEPARTMENT OF COMMERCE
United States Patent and Trademark Office
Address: COMMISSIONER FOR PATENTS
P.O. Box 1450
Alexandria, Virginia 22313-1450
www.uspto.gov

APPLICATION NUMBER	FILING or 371(c) DATE	GRP ART UNIT	FIL FEE REC'D	ATTY.DOCKET.NO	TOT CLAIMS	IND CLAIMS
62/521,170	06/16/2017		260	FTRW-01170US0		

CONFIRMATION NO. 9896

FILING RECEIPT

OC000000092310033

136309
Vierra Magen Marcus/Futurewei
575 Market Street
Suite 3750
San Francisco, CA 94105

Date Mailed: 06/23/2017

Receipt is acknowledged of this provisional patent application. It will not be examined for patentability and will become abandoned not later than twelve months after its filing date. Any correspondence concerning the application must include the following identification information: the U.S. APPLICATION NUMBER, FILING DATE, NAME OF APPLICANT, and TITLE OF INVENTION. Fees transmitted by check or draft are subject to collection. Please verify the accuracy of the data presented on this receipt. **If an error is noted on this Filing Receipt, please submit a written request for a Filing Receipt Correction. Please provide a copy of this Filing Receipt with the changes noted thereon. If you received a "Notice to File Missing Parts" for this application, please submit any corrections to this Filing Receipt with your reply to the Notice. When the USPTO processes the reply to the Notice, the USPTO will generate another Filing Receipt incorporating the requested corrections**

Inventor(s)

Bin Liu, San Diego, CA;
Pengfei Xia, San Diego, CA;
Richard Stirling Gallacher, San Diego, CA;

Applicant(s)

Futurewei Technologies, Inc., Plano, TX

Power of Attorney:
Kevin Spivak--43148

Permission to Access Application via Priority Document Exchange: Yes

Permission to Access Search Results: Yes

Applicant may provide or rescind an authorization for access using Form PTO/SB/39 or Form PTO/SB/69 as appropriate.

If Required, Foreign Filing License Granted: 06/22/2017

The country code and number of your priority application, to be used for filing abroad under the Paris Convention, is **US 62/521,170**

Projected Publication Date: None, application is not eligible for pre-grant publication

Non-Publication Request: No

Early Publication Request: No

Title

METHOD FOR RESPONSE TO PUCCH-BASED BEAM FAILURE RECOVERY REQUEST

Statement under 37 CFR 1.55 or 1.78 for AIA (First Inventor to File) Transition Applications: No

PROTECTING YOUR INVENTION OUTSIDE THE UNITED STATES

Since the rights granted by a U.S. patent extend only throughout the territory of the United States and have no effect in a foreign country, an inventor who wishes patent protection in another country must apply for a patent in a specific country or in regional patent offices. Applicants may wish to consider the filing of an international application under the Patent Cooperation Treaty (PCT). An international (PCT) application generally has the same effect as a regular national patent application in each PCT-member country. The PCT process **simplifies** the filing of patent applications on the same invention in member countries, but **does not result** in a grant of "an international patent" and does not eliminate the need of applicants to file additional documents and fees in countries where patent protection is desired.

Almost every country has its own patent law, and a person desiring a patent in a particular country must make an application for patent in that country in accordance with its particular laws. Since the laws of many countries differ in various respects from the patent law of the United States, applicants are advised to seek guidance from specific foreign countries to ensure that patent rights are not lost prematurely.

Applicants also are advised that in the case of inventions made in the United States, the Director of the USPTO must issue a license before applicants can apply for a patent in a foreign country. The filing of a U.S. patent application serves as a request for a foreign filing license. The application's filing receipt contains further information and guidance as to the status of applicant's license for foreign filing.

Applicants may wish to consult the USPTO booklet, "General Information Concerning Patents" (specifically, the section entitled "Treaties and Foreign Patents") for more information on timeframes and deadlines for filing foreign patent applications. The guide is available either by contacting the USPTO Contact Center at 800-786-9199, or it can be viewed on the USPTO website at http://www.uspto.gov/web/offices/pac/doc/general/index.html.

For information on preventing theft of your intellectual property (patents, trademarks and copyrights), you may wish to consult the U.S. Government website, http://www.stopfakes.gov. Part of a Department of Commerce initiative, this website includes self-help "toolkits" giving innovators guidance on how to protect intellectual property in specific countries such as China, Korea and Mexico. For questions regarding patent enforcement issues, applicants may call the U.S. Government hotline at 1-866-999-HALT (1-866-999-4258).

LICENSE FOR FOREIGN FILING UNDER

Title 35, United States Code, Section 184

Title 37, Code of Federal Regulations, 5.11 & 5.15

GRANTED

The applicant has been granted a license under 35 U.S.C. 184, if the phrase "IF REQUIRED, FOREIGN FILING LICENSE GRANTED" followed by a date appears on this form. Such licenses are issued in all applications where the conditions for issuance of a license have been met, regardless of whether or not a license may be required as set forth in 37 CFR 5.15. The scope and limitations of this license are set forth in 37 CFR 5.15(a) unless an earlier

license has been issued under 37 CFR 5.15(b). The license is subject to revocation upon written notification. The date indicated is the effective date of the license, unless an earlier license of similar scope has been granted under 37 CFR 5.13 or 5.14.

This license is to be retained by the licensee and may be used at any time on or after the effective date thereof unless it is revoked. This license is automatically transferred to any related applications(s) filed under 37 CFR 1.53(d). This license is not retroactive.

The grant of a license does not in any way lessen the responsibility of a licensee for the security of the subject matter as imposed by any Government contract or the provisions of existing laws relating to espionage and the national security or the export of technical data. Licensees should apprise themselves of current regulations especially with respect to certain countries, of other agencies, particularly the Office of Defense Trade Controls, Department of State (with respect to Arms, Munitions and Implements of War (22 CFR 121-128)); the Bureau of Industry and Security, Department of Commerce (15 CFR parts 730-774); the Office of Foreign AssetsControl, Department of Treasury (31 CFR Parts 500+) and the Department of Energy.

NOT GRANTED

No license under 35 U.S.C. 184 has been granted at this time, if the phrase "IF REQUIRED, FOREIGN FILING LICENSE GRANTED" DOES NOT appear on this form. Applicant may still petition for a license under 37 CFR 5.12, if a license is desired before the expiration of 6 months from the filing date of the application. If 6 months has lapsed from the filing date of this application and the licensee has not received any indication of a secrecy order under 35 U.S.C. 181, the licensee may foreign file the application pursuant to 37 CFR 5.15(b).

SelectUSA

The United States represents the largest, most dynamic marketplace in the world and is an unparalleled location for business investment, innovation, and commercialization of new technologies. The U.S. offers tremendous resources and advantages for those who invest and manufacture goods here. Through SelectUSA, our nation works to promote and facilitate business investment. SelectUSA provides information assistance to the international investor community; serves as an ombudsman for existing and potential investors; advocates on behalf of U.S. cities, states, and regions competing for global investment; and counsels U.S. economic development organizations on investment attraction best practices. To learn more about why the United States is the best country in the world to develop technology, manufacture products, deliver services, and grow your business, visit http://www.SelectUSA.gov or call +1-202-482-6800.

PTO/AIA/14 (11-15)
Approved for use through 04/30/2017. OMB 0651-0032
U.S. Patent and Trademark Office; U.S. DEPARTMENT OF COMMERCE

Under the Paperwork Reduction Act of 1995, no persons are required to respond to a collection of information unless it contains a valid OMB control number.

Application Data Sheet 37 CFR 1.76	Attorney Docket Number	FTRW-01170US0
	Application Number	62/521,170
Title of Invention	METHOD FOR RESPONSE TO PUCCH-BASED BEAM FAILURE RECOVERY REQUEST	

The application data sheet is part of the provisional or nonprovisional application for which it is being submitted. The following form contains the bibliographic data arranged in a format specified by the United States Patent and Trademark Office as outlined in 37 CFR 1.76.
This document may be completed electronically and submitted to the Office in electronic format using the Electronic Filing System (EFS) or the document may be printed and included in a paper filed application.

Secrecy Order 37 CFR 5.2:

☐ Portions or all of the application associated with this Application Data Sheet may fall under a Secrecy Order pursuant to 37 CFR 5.2 (Paper filers only. Applications that fall under Secrecy Order may not be filed electronically.)

Inventor Information:

Inventor 1 Remove

Legal Name

Prefix	Given Name	Middle Name	Family Name	Suffix
	Bin		Liu	

Residence Information (Select One) ◉ US Residency ◯ Non US Residency ◯ Active US Military Service

City	San Diego	State/Province	CA	Country of Residence	US

Mailing Address of Inventor:

Address 1	5340 Legacy Drive		
Address 2	Suite 175		
City	Plano	State/Province	TX
Postal Code	75024	Country	US

Inventor 2 Remove

Legal Name

Prefix	Given Name	Middle Name	Family Name	Suffix
	Pengfei		Xia	

Residence Information (Select One) ◉ US Residency ◯ Non US Residency ◯ Active US Military Service

City	San Diego	State/Province	CA	Country of Residence	US

Mailing Address of Inventor:

Address 1	5340 Legacy Drive		
Address 2	Suite 175		
City	Plano	State/Province	TX
Postal Code	750024	Country	US

Inventor 3 Remove

Legal Name

Prefix	Given Name	Middle Name	Family Name	Suffix
	Richard	~~Stirling~~	~~Gallacher~~ Stirling-Gallacher	

Residence Information (Select One) ◉ US Residency ◯ Non US Residency ◯ Active US Military Service

PTO/AIA/14 (11-15)
Approved for use through 04/30/2017. OMB 0651-0032
U.S. Patent and Trademark Office; U.S. DEPARTMENT OF COMMERCE
Under the Paperwork Reduction Act of 1995, no persons are required to respond to a collection of information unless it contains a valid OMB control number.

Application Data Sheet 37 CFR 1.76	Attorney Docket Number	FTRW-01170US0
	Application Number	62/521,170
Title of Invention	METHOD FOR RESPONSE TO PUCCH-BASED BEAM FAILURE RECOVERY REQUEST	

City	San Diego	**State/Province**	CA	**Country of Residence**	US

Mailing Address of Inventor:

Address 1	5340 Legacy Drive		
Address 2	Suite 175		
City	Plano	**State/Province**	TX
Postal Code	750024	**Country**	US

All Inventors Must Be Listed - Additional Inventor Information blocks may be generated within this form by selecting the **Add** button. Add

Correspondence Information:

Enter either Customer Number or complete the Correspondence Information section below.
For further information see 37 CFR 1.33(a).

☐ **An Address is being provided for the correspondence Information of this application.**

Customer Number	136309		
Email Address	patents@vierramagen.com	Add Email	Remove Email

Application Information:

Title of the Invention	METHOD FOR RESPONSE TO PUCCH-BASED BEAM FAILURE RECOVERY REQUEST		
Attorney Docket Number	FTRW-01170US0	**Small Entity Status Claimed**	☐
Application Type	Provisional		
Subject Matter	Utility		
Total Number of Drawing Sheets (if any)	7	**Suggested Figure for Publication (if any)**	

Filing By Reference:

Only complete this section when filing an application by reference under 35 U.S.C. 111(c) and 37 CFR 1.57(a). Do not complete this section if application papers including a specification and any drawings are being filed. Any domestic benefit or foreign priority information must be provided in the appropriate section(s) below (i.e., "Domestic Benefit/National Stage Information" and "Foreign Priority Information").

For the purposes of a filing date under 37 CFR 1.53(b), the description and any drawings of the present application are replaced by this reference to the previously filed application, subject to conditions and requirements of 37 CFR 1.57(a).

Application number of the previously filed application	Filing date (YYYY-MM-DD)	Intellectual Property Authority or Country

Publication Information:

☐ Request Early Publication (Fee required at time of Request 37 CFR 1.219)

☐ **Request Not to Publish.** I hereby request that the attached application not be published under 35 U.S.C. 122(b) and certify that the invention disclosed in the attached application **has not and will not** be the subject of an application filed in another country, or under a multilateral international agreement, that requires publication at eighteen months after filing.

PTO/AIA/14 (11-15)
Approved for use through 04/30/2017. OMB 0651-0032
U.S. Patent and Trademark Office; U.S. DEPARTMENT OF COMMERCE
Under the Paperwork Reduction Act of 1995, no persons are required to respond to a collection of information unless it contains a valid OMB control number.

Application Data Sheet 37 CFR 1.76	Attorney Docket Number	FTRW-01170US0
	Application Number	62/521,170
Title of Invention	METHOD FOR RESPONSE TO PUCCH-BASED BEAM FAILURE RECOVERY REQUEST	

Representative Information:

Representative information should be provided for all practitioners having a power of attorney in the application. Providing this information in the Application Data Sheet does not constitute a power of attorney in the application (see 37 CFR 1.32).
Either enter Customer Number or complete the Representative Name section below. If both sections are completed the customer Number will be used for the Representative Information during processing.

Please Select One:	◉ Customer Number	◯ US Patent Practitioner	◯ Limited Recognition (37 CFR 11.9)
Customer Number	136309		

Domestic Benefit/National Stage Information:

This section allows for the applicant to either claim benefit under 35 U.S.C. 119(e), 120, 121, 365(c), or 386(c) or indicate National Stage entry from a PCT application. Providing benefit claim information in the Application Data Sheet constitutes the specific reference required by 35 U.S.C. 119(e) or 120, and 37 CFR 1.78.
When referring to the current application, please leave the "Application Number" field blank.

Prior Application Status			Remove
Application Number	Continuity Type	Prior Application Number	Filing or 371(c) Date (YYYY-MM-DD)

Additional Domestic Benefit/National Stage Data may be generated within this form by selecting the **Add** button.

Foreign Priority Information:

This section allows for the applicant to claim priority to a foreign application. Providing this information in the application data sheet constitutes the claim for priority as required by 35 U.S.C. 119(b) and 37 CFR 1.55. When priority is claimed to a foreign application that is eligible for retrieval under the priority document exchange program (PDX)[i] the information will be used by the Office to automatically attempt retrieval pursuant to 37 CFR 1.55(i)(1) and (2). Under the PDX program, applicant bears the ultimate responsibility for ensuring that a copy of the foreign application is received by the Office from the participating foreign intellectual property office, or a certified copy of the foreign priority application is filed, within the time period specified in 37 CFR 1.55(g)(1).

			Remove
Application Number	Country[i]	Filing Date (YYYY-MM-DD)	Access Code[i] (if applicable)

Additional Foreign Priority Data may be generated within this form by selecting the **Add** button.

PTO/AIA/14 (11-15)
Approved for use through 04/30/2017. OMB 0651-0032
U.S. Patent and Trademark Office; U.S. DEPARTMENT OF COMMERCE
Under the Paperwork Reduction Act of 1995, no persons are required to respond to a collection of information unless it contains a valid OMB control number.

Application Data Sheet 37 CFR 1.76	Attorney Docket Number	FTRW-01170US0
	Application Number	62/521,170
Title of Invention	METHOD FOR RESPONSE TO PUCCH-BASED BEAM FAILURE RECOVERY REQUEST	

Statement under 37 CFR 1.55 or 1.78 for AIA (First Inventor to File) Transition Applications

☐ This application (1) claims priority to or the benefit of an application filed before March 16, 2013 and (2) also contains, or contained at any time, a claim to a claimed invention that has an effective filing date on or after March 16, 2013.
NOTE: By providing this statement under 37 CFR 1.55 or 1.78, this application, with a filing date on or after March 16, 2013, will be examined under the first inventor to file provisions of the AIA.

PTO/AIA/14 (11-15)
Approved for use through 04/30/2017. OMB 0651-0032
U.S. Patent and Trademark Office; U.S. DEPARTMENT OF COMMERCE
Under the Paperwork Reduction Act of 1995, no persons are required to respond to a collection of information unless it contains a valid OMB control number.

Application Data Sheet 37 CFR 1.76	Attorney Docket Number	FTRW-01170US0
	Application Number	62/521,170
Title of Invention	METHOD FOR RESPONSE TO PUCCH-BASED BEAM FAILURE RECOVERY REQUEST	

Authorization or Opt-Out of Authorization to Permit Access:

When this Application Data Sheet is properly signed and filed with the application, applicant has provided written authority to permit a participating foreign intellectual property (IP) office access to the instant application-as-filed (see paragraph A in subsection 1 below) and the European Patent Office (EPO) access to any search results from the instant application (see paragraph B in subsection 1 below).

Should applicant choose not to provide an authorization identified in subsection 1 below, applicant **must opt-out** of the authorization by checking the corresponding box A or B or both in subsection 2 below.

NOTE: This section of the Application Data Sheet is **ONLY** reviewed and processed with the **INITIAL** filing of an application. After the initial filing of an application, an Application Data Sheet cannot be used to provide or rescind authorization for access by a foreign IP office(s). Instead, Form PTO/SB/39 or PTO/SB/69 must be used as appropriate.

1. Authorization to Permit Access by a Foreign Intellectual Property Office(s)

A. Priority Document Exchange (PDX) - Unless box A in subsection 2 (opt-out of authorization) is checked, the undersigned hereby **grants the USPTO authority** to provide the European Patent Office (EPO), the Japan Patent Office (JPO), the Korean Intellectual Property Office (KIPO), the State Intellectual Property Office of the People's Republic of China (SIPO), the World Intellectual Property Organization (WIPO), and any other foreign intellectual property office participating with the USPTO in a bilateral or multilateral priority document exchange agreement in which a foreign application claiming priority to the instant patent application is filed, access to: (1) the instant patent application-as-filed and its related bibliographic data, (2) any foreign or domestic application to which priority or benefit is claimed by the instant application and its related bibliographic data, and (3) the date of filing of this Authorization. See 37 CFR 1.14(h)(1).

B. Search Results from U.S. Application to EPO - Unless box B in subsection 2 (opt-out of authorization) is checked, the undersigned hereby **grants the USPTO authority** to provide the EPO access to the bibliographic data and search results from the instant patent application when a European patent application claiming priority to the instant patent application is filed. See 37 CFR 1.14(h)(2).

The applicant is reminded that the EPO's Rule 141(1) EPC (European Patent Convention) requires applicants to submit a copy of search results from the instant application without delay in a European patent application that claims priority to the instant application.

2. Opt-Out of Authorizations to Permit Access by a Foreign Intellectual Property Office(s)

☐ A. Applicant **DOES NOT** authorize the USPTO to permit a participating foreign IP office access to the instant application-as-filed. If this box is checked, the USPTO will not be providing a participating foreign IP office with any documents and information identified in subsection 1A above.

☐ B. Applicant **DOES NOT** authorize the USPTO to transmit to the EPO any search results from the instant patent application. If this box is checked, the USPTO will not be providing the EPO with search results from the instant application.

NOTE: Once the application has published or is otherwise publicly available, the USPTO may provide access to the application in accordance with 37 CFR 1.14.

PTO/AIA/14 (11-15)
Approved for use through 04/30/2017. OMB 0651-0032
U.S. Patent and Trademark Office; U.S. DEPARTMENT OF COMMERCE
Under the Paperwork Reduction Act of 1995, no persons are required to respond to a collection of information unless it contains a valid OMB control number.

Application Data Sheet 37 CFR 1.76	Attorney Docket Number	FTRW-01170US0
	Application Number	62/521,170
Title of Invention	METHOD FOR RESPONSE TO PUCCH-BASED BEAM FAILURE RECOVERY REQUEST	

Applicant Information:

Providing assignment information in this section does not substitute for compliance with any requirement of part 3 of Title 37 of CFR to have an assignment recorded by the Office.

Applicant 1

If the applicant is the inventor (or the remaining joint inventor or inventors under 37 CFR 1.45), this section should not be completed. The information to be provided in this section is the name and address of the legal representative who is the applicant under 37 CFR 1.43; or the name and address of the assignee, person to whom the inventor is under an obligation to assign the invention, or person who otherwise shows sufficient proprietary interest in the matter who is the applicant under 37 CFR 1.46. If the applicant is an applicant under 37 CFR 1.46 (assignee, person to whom the inventor is obligated to assign, or person who otherwise shows sufficient proprietary interest) together with one or more joint inventors, then the joint inventor or inventors who are also the applicant should be identified in this section.

Clear

○ Assignee ○ Legal Representative under 35 U.S.C. 117 ○ Joint Inventor

◉ Person to whom the inventor is obligated to assign. ○ Person who shows sufficient proprietary interest

If applicant is the legal representative, indicate the authority to file the patent application, the inventor is:

Name of the Deceased or Legally Incapacitated Inventor:

If the Applicant is an Organization check here. ☒

Organization Name	Futurewei Technologies, Inc.		
Mailing Address Information For Applicant:			
Address 1	5340 Legacy Drive		
Address 2	Suite 175		
City	Plano	**State/Province**	TX
Country	US	Postal Code	75024
Phone Number		Fax Number	
Email Address			

Additional Applicant Data may be generated within this form by selecting the Add button.

Assignee Information including Non-Applicant Assignee Information:

Providing assignment information in this section does not substitute for compliance with any requirement of part 3 of Title 37 of CFR to have an assignment recorded by the Office.

PTO/AIA/14 (11-15)
Approved for use through 04/30/2017. OMB 0651-0032
U.S. Patent and Trademark Office; U.S. DEPARTMENT OF COMMERCE
Under the Paperwork Reduction Act of 1995, no persons are required to respond to a collection of information unless it contains a valid OMB control number.

Application Data Sheet 37 CFR 1.76	Attorney Docket Number	FTRW-01170US0
	Application Number	62/521,170
Title of Invention	METHOD FOR RESPONSE TO PUCCH-BASED BEAM FAILURE RECOVERY REQUEST	

Assignee 1

Complete this section if assignee information, including non-applicant assignee information, is desired to be included on the patent application publication. An assignee-applicant identified in the "Applicant Information" section will appear on the patent application publication as an applicant. For an assignee-applicant, complete this section only if identification as an assignee is also desired on the patent application publication.

If the Assignee or Non-Applicant Assignee is an Organization check here. ☒

Organization Name	Futurewei Technologies, Inc.

Mailing Address Information For Assignee including Non-Applicant Assignee:

Address 1	5340 Legacy Drive		
Address 2	Suite 175		
City	Plano	**State/Province**	TX
Country	US	Postal Code	75024
Phone Number		Fax Number	
Email Address			

Additional Assignee or Non-Applicant Assignee Data may be generated within this form by selecting the Add button.

Signature:

NOTE: This Application Data Sheet must be signed in accordance with 37 CFR 1.33(b). **However, if this Application Data Sheet is submitted with the INITIAL filing of the application and either box A or B is not checked in subsection 2 of the "Authorization or Opt-Out of Authorization to Permit Access" section, then this form must also be signed in accordance with 37 CFR 1.14(c).**

This Application Data Sheet **must** be signed by a patent practitioner if one or more of the applicants is a **juristic entity** (e.g., corporation or association). If the applicant is two or more joint inventors, this form must be signed by a patent practitioner, **all** joint inventors who are the applicant, or one or more joint inventor-applicants who have been given power of attorney (e.g., see USPTO Form PTO/AIA/81) on behalf of **all** joint inventor-applicants.

See 37 CFR 1.4(d) for the manner of making signatures and certifications.

Signature	/Kevin R. Spivak/			Date (YYYY-MM-DD)	~~2017-08-16~~ 2017-06-22
First Name	Kevin	Last Name	Spivak	Registration Number	43148

Additional Signature may be generated within this form by selecting the Add button.

PTO/AIA/14 (11-15)
Approved for use through 04/30/2017. OMB 0651-0032
U.S. Patent and Trademark Office; U.S. DEPARTMENT OF COMMERCE
Under the Paperwork Reduction Act of 1995, no persons are required to respond to a collection of information unless it contains a valid OMB control number.

Application Data Sheet 37 CFR 1.76	Attorney Docket Number	FTRW-01170US0
	Application Number	62/521,170
Title of Invention	METHOD FOR RESPONSE TO PUCCH-BASED BEAM FAILURE RECOVERY REQUEST	

This collection of information is required by 37 CFR 1.76. The information is required to obtain or retain a benefit by the public which is to file (and by the USPTO to process) an application. Confidentiality is governed by 35 U.S.C. 122 and 37 CFR 1.14. This collection is estimated to take 23 minutes to complete, including gathering, preparing, and submitting the completed application data sheet form to the USPTO. Time will vary depending upon the individual case. Any comments on the amount of time you require to complete this form and/or suggestions for reducing this burden, should be sent to the Chief Information Officer, U.S. Patent and Trademark Office, U.S. Department of Commerce, P.O. Box 1450, Alexandria, VA 22313-1450. DO NOT SEND FEES OR COMPLETED FORMS TO THIS ADDRESS. **SEND TO: Commissioner for Patents, P.O. Box 1450, Alexandria, VA 22313-1450.**

Privacy Act Statement

The Privacy Act of 1974 (P.L. 93-579) requires that you be given certain information in connection with your submission of the attached form related to a patent application or patent. Accordingly, pursuant to the requirements of the Act, please be advised that: (1) the general authority for the collection of this information is 35 U.S.C. 2(b)(2); (2) furnishing of the information solicited is voluntary; and (3) the principal purpose for which the information is used by the U.S. Patent and Trademark Office is to process and/or examine your submission related to a patent application or patent. If you do not furnish the requested information, the U.S. Patent and Trademark Office may not be able to process and/or examine your submission, which may result in termination of proceedings or abandonment of the application or expiration of the patent.

The information provided by you in this form will be subject to the following routine uses:

1 The information on this form will be treated confidentially to the extent allowed under the Freedom of Information Act (5 U.S.C. 552) and the Privacy Act (5 U.S.C. 552a). Records from this system of records may be disclosed to the Department of Justice to determine whether the Freedom of Information Act requires disclosure of these records.

2. A record from this system of records may be disclosed, as a routine use, in the course of presenting evidence to a court, magistrate, or administrative tribunal, including disclosures to opposing counsel in the course of settlement negotiations.

3 A record in this system of records may be disclosed, as a routine use, to a Member of Congress submitting a request involving an individual, to whom the record pertains, when the individual has requested assistance from the Member with respect to the subject matter of the record.

4. A record in this system of records may be disclosed, as a routine use, to a contractor of the Agency having need for the information in order to perform a contract. Recipients of information shall be required to comply with the requirements of the Privacy Act of 1974, as amended, pursuant to 5 U.S.C. 552a(m).

5. A record related to an International Application filed under the Patent Cooperation Treaty in this system of records may be disclosed, as a routine use, to the International Bureau of the World Intellectual Property Organization, pursuant to the Patent CooperationTreaty.

6. A record in this system of records may be disclosed, as a routine use, to another federal agency for purposes of National Security review (35 U.S.C. 181) and for review pursuant to the Atomic Energy Act (42 U.S.C. 218(c)).

7. A record from this system of records may be disclosed, as a routine use, to the Administrator, General Services, or his/her designee, during an inspection of records conducted by GSA as part of that agency's responsibility to recommend improvements in records management practices and programs, under authority of 44 U.S.C. 2904 and 2906. Such disclosure shall be made in accordance with the GSA regulations governing inspection of records for this purpose, and any other relevant (i.e., GSA or Commerce) directive. Such disclosure shall not be used to make determinations about individuals.

8. A record from this system of records may be disclosed, as a routine use, to the public after either publication of the application pursuant to 35 U.S.C. 122(b) or issuance of a patent pursuant to 35 U.S.C. 151. Further, a record may be disclosed, subject to the limitations of 37 CFR 1.14, as a routine use, to the public if the record was filed in an application which became abandoned or in which the proceedings were terminated and which application is referenced by either a published application, an application open to public inspections or an issued patent.

9. A record from this system of records may be disclosed, as a routine use, to a Federal, State, or local law enforcement agency, if the USPTO becomes aware of a violation or potential violation of law or regulation.

Electronic Acknowledgement Receipt

EFS ID:	29576034
Application Number:	62521170
International Application Number:	
Confirmation Number:	9896
Title of Invention:	METHOD FOR RESPONSE TO PUCCH-BASED BEAM FAILURE RECOVERY REQUEST
First Named Inventor/Applicant Name:	Bin Liu
Customer Number:	136309
Filer:	Kevin Richard Spivak
Filer Authorized By:	
Attorney Docket Number:	FTRW-01170US0
Receipt Date:	22-JUN-2017
Filing Date:	16-JUN-2017
Time Stamp:	13:06:14
Application Type:	Provisional

Payment information:

Submitted with Payment	no

File Listing:

Document Number	Document Description	File Name	File Size(Bytes)/ Message Digest	Multi Part /.zip	Pages (if appl.)
1	Application Data Sheet	1170-ADS-Amended.pdf	1155779 b66cc1ce3da437c542dd774c0e8b6be5d4a81645	no	9

Warnings:

Information:	
This is not an USPTO supplied ADS fillable form	
Total Files Size (in bytes):	1155779

This Acknowledgement Receipt evidences receipt on the noted date by the USPTO of the indicated documents, characterized by the applicant, and including page counts, where applicable. It serves as evidence of receipt similar to a Post Card, as described in MPEP 503.

New Applications Under 35 U.S.C. 111
If a new application is being filed and the application includes the necessary components for a filing date (see 37 CFR 1.53(b)-(d) and MPEP 506), a Filing Receipt (37 CFR 1.54) will be issued in due course and the date shown on this Acknowledgement Receipt will establish the filing date of the application.
National Stage of an International Application under 35 U.S.C. 371
If a timely submission to enter the national stage of an international application is compliant with the conditions of 35 U.S.C. 371 and other applicable requirements a Form PCT/DO/EO/903 indicating acceptance of the application as a national stage submission under 35 U.S.C. 371 will be issued in addition to the Filing Receipt, in due course.
New International Application Filed with the USPTO as a Receiving Office
If a new international application is being filed and the international application includes the necessary components for an international filing date (see PCT Article 11 and MPEP 1810), a Notification of the International Application Number and of the International Filing Date (Form PCT/RO/105) will be issued in due course, subject to prescriptions concerning national security, and the date shown on this Acknowledgement Receipt will establish the international filing date of the application.

Provisional Application

Method for Response to PUCCH-based Beam Failure Recovery Request

Inventors:

Bin Liu
Pengfei Xia
Richard Stirling Gallacher

FIELD

[0001] The disclosure generally relates to wireless communication networks, and in particular, to recovering from a beam failure between user equipment and a base station.

BACKGROUND

[0002] As the demand for capacity in mobile broadband communications increases drastically every year, wireless communication systems are increasing their capability of handling mobile traffic. In next generation systems, such as fifth generation (5G) technologies, advanced communications, such as millimeter-wave (mm-wave) communications, with potential multigigabit-per-second data rates are candidate technologies to increase overall capacity and transmission speeds. Highly directional beamforming antennas are necessary at both the base station (BS) and mobile station

(MS) to compensate for the high attenuation in the mm-wave frequency band and to extend its transmission range.

[0003] A misalignment between transmitting (Tx) and receiving (Rx) beams may cause a significant loss in the received power, especially for systems with narrow beams, and result in beam failure. To avoid such beam failure, beam alignment in mm-wave communication systems is necessary to find the best beam pair from all possible beam pairs for maximum beamforming efficiency. However, when a beam failure occurs, a reporting and recovery mechanism is employed to report and recover from the failure. During the 3GPP TSG RAN WG1 #89, it was agreed upon to support a non-contention based channel based on the Physical Random Access Channel (PRACH) and the Physical Uplink Control Channel (PUCCH) for beam failure recovery request transmission.

BRIEF SUMMARY

[0004] According to one aspect of the present disclosure, there is provided a method for beam failure recovery in user equipment, including receiving spatial quasi co-located information between a downlink beam pair and an uplink beam pair from a base station; sending a beam failure recovery request (BFRR) to the base station upon detection of a beam failure between the base station and the user equipment; receiving an association indication between the downlink beam pair for a BFRR response and the uplink beam pair for the BFRR; and monitoring one or more available candidate beams in which to receive the BFRR response from the base station, where the BFRR response is associated with the BFRR.

[0005] Optionally, in any of the preceding aspects, the method further includes, when the spatial quasi co-located information is unavailable from the base station, deriving the

spatial quasi co-located information based on received beam correspondence information.

[0006] Optionally, in any of the preceding aspects, the method further includes the user equipment monitors one or multiple physical downlink control channels (PDCCH) such that a demodulation reference signal of each PDCCH is spatially quasi co-located with a reference signal of one of the one or more available candidate beam.

[0007] Optionally, in any of the preceding aspects, the method further includes the available candidate beams are identified by the user equipment for data transmission.

[0008] Optionally, in any of the preceding aspects, the method further includes, when the BFRR response is not received within a predetermined time period, the user equipment restarts the beam failure recovery.

[0009] Optionally, in any of the preceding aspects, the method further includes, wherein upon detection of the beam failure, the BFRR is sent using a physical uplink control channel (PUCCH) in the uplink beam pair.

[0010] Optionally, in any of the preceding aspects, the method further includes, when the BFRR is sent using the PUCCH, the user equipment identifies a downlink beam pair for the base station to send the BFRR response in the uplink beam pair.

[0011] Optionally, in any of the preceding aspects, the method further includes selecting the one or more available candidate beams based on radio link quality.

[0012] Optionally, in any of the preceding aspects, the method further includes the association indication between the downlink beam pair for the BFRR response and the uplink beam pair for the BFRR is a time offset.

[0013] Optionally, in any of the preceding aspects, the method further includes the monitoring the one or more available candidate beams further includes monitoring for the BFRR response in the downlink beam pairs spatially quasi co-located with the BFRR in a time slot with a time offset to the BFRR.

[0014] Optionally, in any of the preceding aspects, the method further includes the association indication is conveyed during beam configuration signaling or pre-configured with system information over a physical broadcast channel.

[0015] Optionally, in any of the preceding aspects, the method further includes, when two or more uplink beam pairs exist, each having a spatial quasi co-located downlink beam pair, further comprising transmitting multiple BFRRs in two or more uplink beam pairs simultaneously.

[0016] Optionally, in any of the preceding aspects, the method further includes, when two or more uplink beam pairs exist, each having a spatial quasi co-located downlink beam pair, further comprising transmitting multiple BFRRs in the uplink beam pairs in time division duplex (TDD).

[0017] According to one aspect of the present disclosure, there is provided a device, including a non-transitory memory storage comprising instructions; and one or more processors in communication with the memory, wherein the one or more processors execute the instructions to: receive spatial quasi co-located information between a downlink beam pair and an uplink beam pair from a base station; send a beam failure recovery request (BFRR) to the base station upon detection of a beam failure between the base station and the device; receive an association indication between the downlink beam pair for a BFRR response and the uplink beam pair for the BFRR; and monitor one or more available candidate beams in which to receive the BFRR response from the base station, where the BFRR response is associated with the BFRR.

[0018] According to one aspect of the present disclosure, there is provided a non-transitory computer-readable medium storing computer instructions for beam failure recovery in user equipment, that when executed by one or more processors, cause the one or more processors to perform the steps of: receiving spatial quasi co-located information between a downlink beam pair and an uplink beam pair from a base station; sending a beam failure recovery request (BFRR) to the base station upon detection of a

beam failure between the base station and the user equipment; receiving an association indication between the downlink beam pair for a BFRR response and the uplink beam pair for the BFRR; and monitoring one or more available candidate beams in which to receive the BFRR response from the base station, where the BFRR response is associated with the BFRR.

[0019] This Summary is provided to introduce a selection of concepts in a simplified form that are further described below in the Detailed Description. This Summary is not intended to identify key features or essential features of the claimed subject matter, nor is it intended to be used as an aid in determining the scope of the claimed subject matter. The claimed subject matter is not limited to implementations that solve any or all disadvantages noted in the Background.

BRIEF DESCRIPTION OF THE DRAWINGS

[0020] Aspects of the present disclosure are illustrated by way of example and are not limited by the accompanying figures for which like references indicate elements.

[0021] FIG. 1 illustrates a wireless network for communicating data.

[0022] FIG. 2 illustrates a base station with transmitting and receiving beams according to an example embodiment

[0023] FIG. 3 illustrates physical channels and transmitting signals on the physical channels in accordance with FIG. 2.

[0024] FIGS. 4A and 4B illustrate examples of beam failure between a base station and user equipment.

[0025] FIG. 5A FIGS. 5A illustrates an association indication between a downlink beam pair and an uplink beam pair.

[0026] FIG. 5B FIGS. 5B illustrates an association indication between a downlink beam pair and an uplink beam pair.

[0027] FIGS. 6A – 6D illustrate example flow diagrams in accordance with various embodiments. FIG. 7A illustrates example user equipment that may implement the methods and teachings according to this disclosure.

[0028] FIG. 7B illustrates example base station that may implement the methods and teachings according to this disclosure.

[0029] FIG. 8 illustrates a block diagram of a network system that can be used to implement various embodiments.

DETAILED DESCRIPTION

[0030] The disclosure relates to technology for recovering from a beam failure between user equipment and a base station.

[0031] User equipment and base stations establish a connections using downlink and uplink beam pairs. Often times, for example as a result of blockage or user equipment rotation or displacement, the connection between the user equipment and the base station is disrupted, resulting in a beam failure. To overcome such failure, a beam failure recovery mechanism may help to improve high frequency link performance.

[0032] In one embodiment, in order to recover the connection, a beam failure recovery request (BFRR) is sent by the user equipment in an attempt to reestablish the connection with the base station when a beam failure occurs. Using spatially quasi co-located information between a downlink beam pair and an uplink beam pair provided by the base station, the user equipment may monitor candidate beams in which to receive a BFRR response from the base station, where the BFRR response is associated with the BFRR and the downlink beam(s) is in a time slot with a time offset to the BFRR.

[0033] It is understood that the present embodiments of the disclosure may be implemented in many different forms and that claims scopes should not be construed as

being limited to the embodiments set forth herein. Rather, these embodiments are provided so that this disclosure will be thorough and complete and will fully convey the inventive embodiment concepts to those skilled in the art. Indeed, the disclosure is intended to cover alternatives, modifications and equivalents of these embodiments, which are included within the scope and spirit of the disclosure as defined by the appended claims. Furthermore, in the following detailed description of the present embodiments of the disclosure, numerous specific details are set forth in order to provide a thorough understanding. However, it will be clear to those of ordinary skill in the art that the present embodiments of the disclosure may be practiced without such specific details.

[0034] FIG. 1 illustrates a wireless network for communicating data. The communication system 100 includes, for example, user equipment 110A-110C, radio access networks (RANs) 120A-120B, a core network 130, a public switched telephone network (PSTN) 140, the Internet 150, and other networks 160. Additional or alternative networks include private and public data-packet networks including corporate intranets. While certain numbers of these components or elements are shown in the figure, any number of these components or elements may be included in the system 100.

[0035] In one embodiment, the wireless network may be a fifth generation (5G) network including at least one 5G base station which employs orthogonal frequency-division multiplexing (OFDM) and/or non-OFDM and a transmission time interval (TTI) shorter than 1 ms (e.g. 100 or 200 microseconds), to communicate with the communication devices. In general, a base station may also be used to refer any of the eNB and the 5G BS (gNB). In addition, the network may further include a network server for processing information received from the communication devices via the at least one eNB or gNB.

[0036] System 100 enables multiple wireless users to transmit and receive data and other content. The system 100 may implement one or more channel access methods, such as but not limited to code division multiple access (CDMA), time division multiple access

(TDMA), frequency division multiple access (FDMA), orthogonal FDMA (OFDMA), or single-carrier FDMA (SC-FDMA).

[0037] The user equipment (UE) 110A-110C are configured to operate and/or communicate in the system 100. For example, the user equipment 110A-110C are configured to transmit and/or receive wireless signals or wired signals. Each user equipment 110A-110C represents any suitable end user device and may include such devices (or may be referred to) as a user equipment/device, wireless transmit/receive unit (WTRU), mobile station, fixed or mobile subscriber unit, pager, cellular telephone, personal digital assistant (PDA), smartphone, laptop, computer, touchpad, wireless sensor, or consumer electronics device.

[0038] In the depicted embodiment, the RANs 120A-120B include one or more base stations 170A, 170B (collectively, base stations 170), respectively. Each of the base stations 170 is configured to wirelessly interface with one or more of the UEs 110A, 110B, 110C to enable access to the core network 130, the PSTN 140, the Internet 150, and/or the other networks 160. For example, the base stations (BSs) 170 may include one or more of several well-known devices, such as a base transceiver station (BTS), a Node-B (NodeB), an evolved NodeB (eNB), a next (fifth) generation (5G) NodeB (gNB), a Home NodeB, a Home eNodeB, a site controller, an access point (AP), or a wireless router, or a server, router, switch, or other processing entity with a wired or wireless network.

[0039] In one embodiment, the base station 170A forms part of the RAN 120A, which may include other base stations, elements, and/or devices. Similarly, the base station 170B forms part of the RAN 120B, which may include other base stations, elements, and/or devices. Each of the base stations 170 operates to transmit and/or receive wireless signals within a particular geographic region or area, sometimes referred to as a “cell.” In some embodiments, multiple-input multiple-output (MIMO) technology may be employed having multiple transceivers for each cell.

[0040] The base stations 170 communicate with one or more of the user equipment 110A-110C over one or more air interfaces (not shown) using wireless communication links. The air interfaces may utilize any suitable radio access technology.

[0041] It is contemplated that the system 100 may use multiple channel access functionality, including for example schemes in which the base stations 170 and user equipment 110A-110C are configured to implement the Long Term Evolution wireless communication standard (LTE), LTE Advanced (LTE-A), and/or LTE Broadcast (LTE-B). In other embodiments, the base stations 170 and user equipment 110A-110C are configured to implement UMTS, HSPA, or HSPA+ standards and protocols. Of course, other multiple access schemes and wireless protocols may be utilized.

[0042] The RANs 120A-120B are in communication with the core network 130 to provide the user equipment 110A-110C with voice, data, application, Voice over Internet Protocol (VoIP), or other services. As appreciated, the RANs 120A-120B and/or the core network 130 may be in direct or indirect communication with one or more other RANs (not shown). The core network 130 may also serve as a gateway access for other networks (such as PSTN 140, Internet 150, and other networks 160). In addition, some or all of the user equipment 110A-110C may include functionality for communicating with different wireless networks over different wireless links using different wireless technologies and/or protocols.

[0043] The RANs 120A-120B may also include millimeter and/or microwave access points (APs). The APs may be part of the base stations 170 or may be located remote from the base stations 170. The APs may include, but are not limited to, a connection point (a mmW CP) or a base station 170 capable of mmW communication (e.g., a mmW base station). The mmW APs may transmit and receive signals in a frequency range, for example, from 6 GHz to 100 GHz, but are not required to operate throughout this range. As used herein, the term base station is used to refer to a base station and/or a wireless access point.

[0044] Although FIG. 1 illustrates one example of a communication system, various changes may be made to FIG. 1. For example, the communication system 100 could include any number of user equipment, base stations, networks, or other components in any suitable configuration. It is also appreciated that the term user equipment may refer to any type of wireless device communicating with a radio network node in a cellular or mobile communication system. Non-limiting examples of user equipment are a target device, device-to-device (D2D) user equipment, machine type user equipment or user equipment capable of machine-to-machine (M2M) communication, PDA, iPAD, Tablet, mobile terminals, smart phone, laptop embedded equipped (LEE), laptop mounted equipment (LME) and USB dongles.

[0045] FIG. 2 illustrates a base station with transmitting and receiving beams according to an example embodiment. The base station 202 manages a cell 204 divided into one or more sectors as its service coverage area and forms a multiple transmit/receive (Tx/Rx) beams BM1 – BM7 using beamforming schemes, such as digital beamforming (e.g., Transmit (Tx) pre-Inverse Fast Fourier Transform (pre-IFFT) beamforming/Receive (Rx) post-Fast Fourier Transform (post-FFT) beamforming), analog beamforming (e.g., Tx post-IFFT beamforming/Rx pre-FFT beamforming), or a combination thereof. The BS 400 transmits the beam-formed signals by sweeping them simultaneously or successively, for example, beginning with beam BM1 and ending with BM7

[0046] User equipment, such as user equipment 110A – 110C (FIG. 1), located within the cell of the base station 202 may be configured to receive signals omni-directionally without supporting Rx beamforming, receive signals while supporting Rx beamforming by using one beamforming pattern each time, or receive signals while supporting Rx beamforming by simultaneously using a plurality of beamforming patterns in different directions.

[0047] If the user equipment 110A – 110C does not support Rx beamforming, the user equipment 110A – 110C measures the channel quality of a reference signal in each

transmission beam and reports the measurements to the base station 202. The station 202 selects the best beam for the user equipment 110A – 110C from among a plurality of Tx beams. If the user equipment 110A – 110C is configured to support Rx beamforming, the user equipment 110A – 110C measures the channel qualities of multiple Tx beams received from the station 202 for each reception beam pattern and reports total or some high-ranked measurements of all Tx-Rx beam pairs to the station 202. The base station 202 may allocate an appropriate Tx beam to the user equipment 110A – 110C. If the user equipment 110A – 110C is capable of receiving a plurality of Tx beams from the station 202 or supporting a plurality of base station Tx-user equipment Rx beam pairs, the station 202 may select a beam, taking into account diversity transmission through repeated transmission or simultaneous transmission.

[0048] FIG. 3 illustrates physical channels and transmitting signals on the physical channels in accordance with FIG. 2. When user equipment 110A – 110C (FIG. 1) is powered on or enters a new cell, such as cell 204 (FIG. 2), the user equipment performs an initial cell search 302. The initial cell search 302 involves acquisition of synchronization to a base station, such as gNB 202. Specifically, the user equipment synchronizes its timing to the gNB and acquires a cell Identifier (ID) and other information by receiving a Primary Synchronization Channel (P-SCH) and a Secondary Synchronization Channel (S-SCH) from the gNB 202. Subsequently, the user equipment may acquire information broadcast in the cell by receiving a Physical Broadcast Channel (PBCH) from the gNB 202. During the initial cell search, the user equipment may monitor a downlink (DL) channel state by receiving a downlink reference Signal (DL RS).

[0049] After the initial cell search, the user equipment 110A – 110C may acquire detailed system information at 304 by receiving a Physical Downlink Control Channel (PDCCH) and receiving a Physical Downlink Shared Channel (PDSCH) based on information included in the PDCCH.

[0050] If the user equipment 110A – 110C initially accesses the gNB 202 or has no radio resources for signal transmission to the gNB 202, the user equipment 110A – 110C may perform a random access procedure at 306 with the gNB 202. During the random access procedure 306, the user equipment 110A – 110C may transmit a predetermined sequence as a preamble on a PRACH and may receive a response message to the preamble on a PDCCH and a PDSCH associated with the PDCCH.

[0051] Upon completion of the above process, the user equipment 110A – 110C may receive a PDCCH and/or a PDSCH from the gNB 202 and transmit a Physical Uplink Shared Channel (PUSCH) and/or a PUCCH to the gNB 202, which is a general DL and UL signal transmission procedure at 308. Specifically, the user equipment 110A – 110C receives Downlink Control Information (DCI) on a PDCCH. The DCI includes, for example, control information such as resource allocation information for the user equipment 110A – 110C.

[0052] Control information that the user equipment 110A – 110C transmits to the gNB 202 on the uplink (UL) channel or receives from the gNB 202 on the DL channel includes a DL/UL ACKnowledgment/Negative ACKnowledgment (ACK/NACK) signal, a Channel Quality Indicator (CQI), a Precoding Matrix Index (PMI), a Rank Indicator (RI), etc. Such The control information, such as a CQI, a PMI, an RI, etc., may be transmitted on a PUSCH and/or a PUCCH.

[0053] FIGS. 4A and 4B illustrate examples of beam failure between a base station and user equipment. As illustrated, base station 402 is in communication with user equipment 404, in which the base station 402 and user equipment 404 communicate via DL beam pairs and UL beam pairs. In one embodiment, the DL beam pair fails (FIG. 4A). In another embodiment, the DL/UL beam pair fails (FIG. 4B).

[0054] Before establishing a communication or beam pair link with a base station 402, user equipment 404 generally performs cell acquisition and synchronization. The cell acquisition step typically involves receiving a synchronization signal from base station

402. In a high frequency wave band, beam-forming may be applied to synchronization signals (otherwise, the distance at which the synchronization signal can be received is much smaller than the distance at which the beam-formed data channels can be received). If the synchronization signals are beam-formed, only user equipment 404 within the narrow angle covered by the beam are able to receive the synchronization signal. Thus, the base station may “beam-sweep” to ensure the user equipment 404 has a chance to receive the synchronization signal. Beam sweeping refers to rotating the direction of the beam to cover all directions. Moreover, the user equipment 404 may need to rotate the direction in which it searches for the synchronization signal in order for the antennas (which may be phase-arrayed) of the base station 402 and user equipment 404 to be mutually aligned.

[0055] The cell acquisition and synchronization becomes even more complicated if the user equipment 404 is moving, as the direction of arrival of the synchronization signal beam keeps changing. Also, the user equipment 404 may try to locate multiple base stations 402 to identify multiple cells suitable for service. Sweeping procedures to identify a group of base stations can mean a substantial increase in the cell acquisition duration.

[0056] At higher frequencies (e.g., microwave and millimeter-wave spectrum), beam-formed transmissions are an important feature to overcome higher path losses. Beam-forming may be applied to user equipment specific DL and UL data transmissions, and also to common channels such as synchronization and control channels on the DL and random access channels on the UL.

[0057] Since the antenna arrangements (not shown) at the base station 402 and at the user equipment 404 allow beam-forming, there can be a number of directions of transmission and of reception at each of the base stations 402 and the user equipment 404. There may be any number of directions for reception at the user equipment 404 and any number of directions for transmission. For example, in the embodiments of FIG. 4A, a single or unidirectional transmission and reception beam pair are illustrated, whereas

in FIG. 4B, multiple directions or omnidirectional transmission and reception beam pairs are illustrated.

[0058] The system may then find the "best" beam pair(s) for transmission and reception among a number of reception directions and a number of transmission directions such that if a signal is received from the base station 402 from a particular receive direction, a corresponding transmit direction to transmit to the base station 402 can be identified.

[0059] Beam pair transmission and reception (in the DL and UL beams) use multiple access technologies—orthogonal frequency division multiple access (OFDMA) for the DL, and single-carrier frequency division multiple access (SC-FDMA) for the UL. Dedicated data channels are not used in in next generation systems, such as LTE and 5G. Instead shared transport channel resources are used in both the DL and the UL communications between the base station 402 and the user equipment 404. These shared transport channels DL-SCH and UL-SCH are respectively mapped to the physical downlink shared channel (PDSCH) on the DL OFDM subframe and physical uplink shared channel (PUSCH) on the UL SC-FDMA subframe.

[0060] The OFDM and the SC-FDMA subframes respectively include the physical downlink control channel (PDCCH) and physical uplink control channel (PUCCH). The PDCCH is used to convey user equipment-specific downlink control information (DCI) from the base station 402 to the user equipment 404. Similarly, the PUCCH is used to carry uplink control information (UCI) from the user equipment 404 to the base station 402, such as channel quality indication (CQI) reports, ACK/NACK responses and scheduling requests (SR).

[0061] At some point after establishing a communication or beam pair link, one of the beam pairs may fail. For example, in the embodiment of FIG. 4A, the DL beam has failed and the UL beam remains active (FIG. 4A). In the embodiment of FIG. 4B, both the DL and UL beams fail.

[0062] In order for the system to recover from such a beam failure, the user equipment 404 sends a beam failure recovery request (BFRR) to the base station 402. In one embodiment, where only the DL beam has failed, the user equipment 404 may use the active PUCCH (originally allocated for UCI) to report the beam failure and request recovery from the base station 402, as explained further below. In another embodiment, where the DL and UL beams have failed, the user equipment 404 may also attempt to use the PUCCH for BFRR, although since the UL bean has also failed, it is unlikely that any transmission will be successful. In either case, the BFRR sent by the user equipment 404 requires a response message (BFRR response) from the base station 402 in order to recover from the beam failure.

[0063] In order for the base station 402 to send a BFRR response, the user equipment 404 has to determine when and which candidate beam(s) may be used by the base station 402 to send a response. In order to make this determination, the user equipment 402 uses the spatial quasi co-located (SQCL) information between the base station 402 transmission (DL) and receive (UL) beams. Such that UE will monitor the base station DL beam(s) spatial QCLed with the base station UL receive beam for BFRR reception.

[0064] As noted above, the PUCCH can be used to report the beam failure recovery request (BFRR). Use of the PUCCH to report a BFRR was agreed upon during the 3GPP TSG RAN WG1 #89 meeting. However, while the PUCCH may be used by the user equipment 404 to transmit the BFRR, the user equipment 404 does not know which DL beam may be used by the base station 402 to transmit a BFRR response. To make this determination, the user equipment 404 monitors candidate DL beams (e.g., in the PDCCH region of a DL beam) to determine which of the available candidate beam(s) may be used by the base station 402 to send the BFRR response. That is, the user equipment 404 monitors the PDCCH with the assumption that the corresponding PDCCH DMRS is SQCLed with the RS of the identified candidate beam(s) by the user equipment 404.

[0065] To monitor the candidate beams, the user equipment 404 may (1) be provided with the SQCL information between the active DL/UL beam pairs directly from the base station 402 or (2) utilize beam correspondence information between the DL and UL beam pairs.

[0066] Beam correspondence refers to the reciprocity between UL and DL beams. If a base station 402 or user equipment 404 is able to determine the Tx beam to use based on the Rx beam, then it may be said to have beam correspondence. In a multi-beam architecture for millimeter or microwave operation, for example beam correspondence may not always be able to be assumed.

[0067] In case where beam correspondence information is not readily available, the SQCL information may be conveyed directly from the base station 402 in beam configuration signaling, such as Radio Resource Control (RRC), Medium Access Control (MAC) – Control Element (CE) or DL control information (DCI).

[0068] In the case where the beam correspondence is available, the user equipment 404 may determine the SQCL status for the active beam pairs. For example, when beam correspondence information is available in the base station 402, the user equipment Tx beam is indicated by the base station 402 CSI-RS resource indicator, thereby enabling the user equipment to determine the SQCLed DL beam pair and UL beam pair.

[0069] Although not the subject of this disclosure, in one embodiment, if no SQCLed DL beam pair is available for the UL beam pair that was in use prior to beam failure, the user equipment may employ a PRACH-like BFRR scheme.

[0070] FIGS. 5A illustrates an association indication between a downlink beam pair and an uplink beam pair. In particular, FIG. 5A illustrates an association indication between the downlink beam pair for a BFRR response by the base station and the uplink beam pair for the BFRR from the user equipment for a single transmission.

[0071] As explained in the example of FIGS. 4A and 4B, in the event of a beam failure, the user equipment sends a BFRR in the UL beam pair (UL BPL) to the base station. In return, the base station responds with a BFRR response in the DL beam pair (DL BPL)

that is SQCLed with the UL beam pair used for BFRR transmission. In order to implement the BFRR and BFRR response procedure, a transmission occasion association between the BFRR (sent by the user equipment) and the BFRR response (sent by the base station) is used to monitor the DL beams. In one embodiment, the association is indicated by a time offset such that monitoring the DL beams for the BFRR response is spatially quasi co-located with the BFRR in a time slot with the time offset to the BFRR.

[0072] In one embodiment, the time offset is pre-configured with system information (PBCH) for beam failure recovery. In another embodiment, the time offset is indicated to the user equipment in the beam configuration signaling, such as the RRC, MAC-CE or DCI.

[0073] FIGS. 5B illustrates an association indication between a downlink beam pair and an uplink beam pair. In particular, FIG. 5B illustrates an association indication between the downlink beam pair for a BFRR response by the base station and the uplink beam pair for the BFRR from the user equipment for multiple transmissions.

[0074] In one embodiment, when multiple UL beam pairs are available, and each beam pair has a corresponding SQCLed DL beam pair, the user equipment may transmit multiple BFRRs in UL beam pairs (UL BPL1, UL BPL2) simultaneously. Simultaneous transmission may occur by the user equipment (1) monitoring the SQCLed DL beam pairs for the BFRR response simultaneously (if the user equipment Rx capability permits), (2) monitoring the “best” SQCLed DL beam pair (best candidate beam based, for example, on channel quality) for the BFRR response, or (3) indicating a preferred DL beam pair in the BFRR to the base station, in which the user equipment monitors the indicated DL beam pair according to the time offset (in this case, the user equipment may only monitor one DL beam, so a recommendation is made as to the best performing beam).

[0075] In another embodiment, the user equipment may transmit the BFRR in multiple UL beam pairs in time division duplex (TDD). Similar to the example above, the user equipment may monitor SQCLed DL beam pair for each UL beam pair according to the

pre-configured system information or indicated time offset to the user equipment, or the user equipment may identify a preferred DL beam pair in the BFRR in which the user equipment monitors the indicated DL beam pair according to the time offset.

[0076] FIGS. 6A – 6D illustrate example flow diagrams in accordance with various embodiments. In the flow diagrams, and for purposes of discussion, the procedures are implemented by user equipment. In one other embodiment, the procedures are implemented by a base station. However, it is appreciated that the procedure may be implemented by any component or device disclosed in any one or more of FIGS. 1, 7A, 7B and 8, and that the disclosed embodiments are non-limiting.

[0077] With reference to FIG. 6A, user equipment 110A – 110C (FIG. 1) receives SQCLed information between a downlink beam pair and an uplink beam pair from a base station 170A – 170B (FIG. 1). As described above, in the event that the base station 170A – 170B is unable to provide the SQCLed information to the user equipment 110A – 110C, the user equipment 110A – 110C at 602 may be able to determine the SQCL status for active beam pairs using beam correspondence information between the DL and UL beam pairs.

[0078] When a beam failure is detected by the user equipment 110A – 110C at 604, the user equipment 110A – 110B sends a beam failure recovery request (BFRR) to the servicing base station 170A – 170B. The BFRR may use the PUCCH to report the BFRR to the base station 170A – 170B.

[0079] At 606, the user equipment receives an association indication between the downlink beam pair for a BFRR response and the uplink beam pair for the BFRR. The association indication may be indicated, for example, as a time offset which can be pre-configured with system information, such as through the PBCH, for beam failure recovery or provided to the user equipment 110A – 110C in signaling information before beam failure occurs, such as RRC, MAC-CE or DCI.

[0080] Once the BFRR has been sent and the association indicator has been received by the user equipment 110A – 110C, the user equipment 110A – 110C monitors available candidate beams in which to receive the BFRR response from the base station 170A – 170B, where the BFRR response is associated with the BFRR, at 608. As explained above, in order to properly monitor the candidate beam(s), the user equipment 110A – 110C uses SQCL information between the base station transmit and receive beams.

[0081] FIG. 6B illustrates a flow diagram of identifying a downlink beam pair. At 610, the user equipment 110A – 110C sends a BFRR using the PUCCH, such that the user equipment may identify a DL beam pair for the base station to send the BFRR response in the UL beam pair.

[0082] FIGS. 6C and 6D illustrates flow diagrams in which multiple beam failure recovery requests are transmitted. In the embodiment of FIG. 6C, when two or more uplink beam pairs exist, each having a spatial quasi co-located downlink beam pair, the user equipment may transmit multiple BFRRs in two or more uplink beam pairs simultaneously, as explained with reference to FIG. 5B. In the embodiment of FIG. 6D, when two or more uplink beam pairs exist, each having a spatial quasi co-located downlink beam pair, the user equipment transmits multiple BFRRs in the uplink beam pairs in time division duplex (TDD), as explained with reference to FIG. 5B.

[0083] FIG. 7A illustrates example user equipment that may implement the methods and teachings according to this disclosure. As shown in the figure, the UE 700 includes at least one processor 704. The processor 704 implements various processing operations of the UE 700. For example, the processor 704 may perform signal coding, data processing, power control, input/output processing, or any other functionality enabling the UE 700 to operate in the system 100 (FIG. 1). The processor 704 may include any suitable processing or computing device configured to perform one or more operations. For example, the processor 704 may include a microprocessor, microcontroller, digital signal processor, field programmable gate array, or application specific integrated circuit.

[0084] The UE 700 also includes at least one transceiver 702. The transceiver 702 is configured to modulate data or other content for transmission by at least one antenna 710. The transceiver 702 is also configured to demodulate data or other content received by the at least one antenna 710. Each transceiver 702 may include any suitable structure for generating signals for wireless transmission and/or processing signals received wirelessly. Each antenna 710 includes any suitable structure for transmitting and/or receiving wireless signals. It is appreciated that one or multiple transceivers 702 could be used in the UE 700, and one or multiple antennas 710 could be used in the UE 700. Although shown as a single functional unit, a transceiver 702 may also be implemented using at least one transmitter and at least one separate receiver.

[0085] The UE 700 further includes one or more input/output devices 708. The input/output devices 708 facilitate interaction with a user. Each input/output device 708 includes any suitable structure for providing information to or receiving information from a user, such as a speaker, microphone, keypad, keyboard, display, or touch screen.

[0086] In addition, the UE 700 includes at least one memory 706. The memory 706 stores instructions and data used, generated, or collected by the UE 700. For example, the memory 706 could store software or firmware instructions executed by the processor(s) 704 and data used to reduce or eliminate interference in incoming signals. Each memory 706 includes any suitable volatile and/or non-volatile storage and retrieval device(s). Any suitable type of memory may be used, such as random access memory (RAM), read only memory (ROM), hard disk, optical disc, subscriber identity module (SIM) card, memory stick, secure digital (SD) memory card, and the like.

[0087] FIG. 7B illustrates example base station that may implement the methods and teachings according to this disclosure. As shown in the figure, the base station 750 includes at least one processor 758, at least one transmitter 752, at least one receiver 754, one or more antennas 760, and at least one memory 756. The processor 758 implements various processing operations of the base station 750, such as signal coding,

data processing, power control, input/output processing, or any other functionality. Each processor 758 includes any suitable processing or computing device configured to perform one or more operations. Each processor 758 could, for example, include a microprocessor, microcontroller, digital signal processor, field programmable gate array, or application specific integrated circuit.

[0088] Each transmitter 752 includes any suitable structure for generating signals for wireless transmission to one or more UEs or other devices. Each receiver 754 includes any suitable structure for processing signals received wirelessly from one or more UEs or other devices. Although shown as separate components, at least one transmitter 752 and at least one receiver 754 could be combined into a transceiver. Each antenna 760 includes any suitable structure for transmitting and/or receiving wireless signals. While a common antenna 760 is shown here as being coupled to both the transmitter 752 and the receiver 754, one or more antennas 760 could be coupled to the transmitter(s) 752, and one or more separate antennas 760 could be coupled to the receiver(s) 754. Each memory 756 includes any suitable volatile and/or non-volatile storage and retrieval device(s).

[0089] FIG. 8 is a block diagram of a network device that can be used to implement various embodiments. Specific network devices may utilize all of the components shown, or only a subset of the components, and levels of integration may vary from device to device. Furthermore, the network device 800 may contain multiple instances of a component, such as multiple processing units, processors, memories, transmitters, receivers, etc. The network device 800 may comprise a processing unit 801 equipped with one or more input/output devices, such as network interfaces, storage interfaces, and the like. The processing unit 801 may include a central processing unit (CPU) 810, a memory 820, a mass storage device 830, and an I/O interface 860 connected to a bus 870. The bus 870 may be one or more of any type of several bus architectures including a memory bus or memory controller, a peripheral bus or the like.

[0090] The CPU 810 may comprise any type of electronic data processor. The memory 820 may comprise any type of system memory such as static random access memory (SRAM), dynamic random access memory (DRAM), synchronous DRAM (SDRAM), read-only memory (ROM), a combination thereof, or the like. In an embodiment, the memory 820 may include ROM for use at boot-up, and DRAM for program and data storage for use while executing programs. In embodiments, the memory 820 is non-transitory. In one embodiment, the memory 820 includes receiving module 821A receiving spatial quasi co-located information between a downlink beam pair and an uplink beam pair from a base station and receiving an association indication between the downlink beam pair for a beam failure recovery request (BFRR) response and the uplink beam pair for the BFRR, a sending module 821B sending a BFRR to the base station upon detection of a beam failure between the base station and the user equipment, a monitoring module 821C monitoring one or more available candidate beams in which to receive the BFRR response from the base station, where the BFRR response is associated with the BFRR, a transmitting module 821D transmitting multiple BFRRs in two or more uplink beam pairs simultaneously and transmitting multiple BFRRs in the uplink beam pairs in time division duplex (TDD), and a selecting module 821E selecting the one or more available candidate beams based on radio link quality.

[0091] The mass storage device 830 may comprise any type of storage device configured to store data, programs, and other information and to make the data, programs, and other information accessible via the bus 870. The mass storage device 830 may comprise, for example, one or more of a solid state drive, hard disk drive, a magnetic disk drive, an optical disk drive, or the like.

[0092] The processing unit 801 also includes one or more network interfaces 850, which may comprise wired links, such as an Ethernet cable or the like, and/or wireless links to access nodes or one or more networks 880. The network interface 850 allows the processing unit 801 to communicate with remote units via the networks 680. For example,

the network interface 850 may provide wireless communication via one or more transmitters/transmit antennas and one or more receivers/receive antennas. In an embodiment, the processing unit 801 is coupled to a local-area network or a wide-area network for data processing and communications with remote devices, such as other processing units, the Internet, remote storage facilities, or the like.

[0093] It is understood that the present subject matter may be embodied in many different forms and should not be construed as being limited to the embodiments set forth herein. Rather, these embodiments are provided so that this subject matter will be thorough and complete and will fully convey the disclosure to those skilled in the art. Indeed, the subject matter is intended to cover alternatives, modifications and equivalents of these embodiments, which are included within the scope and spirit of the subject matter as defined by the appended claims. Furthermore, in the following detailed description of the present subject matter, numerous specific details are set forth in order to provide a thorough understanding of the present subject matter. However, it will be clear to those of ordinary skill in the art that the present subject matter may be practiced without such specific details.

[0094] Aspects of the present disclosure are described herein with reference to flowchart illustrations and/or block diagrams of methods, apparatuses (systems) and computer program products according to embodiments of the disclosure. It will be understood that each block of the flowchart illustrations and/or block diagrams, and combinations of blocks in the flowchart illustrations and/or block diagrams, can be implemented by computer program instructions. These computer program instructions may be provided to a processor of a general purpose computer, special purpose computer, or other programmable data processing apparatus to produce a machine, such that the instructions, which execute via the processor of the computer or other programmable instruction execution apparatus, create a mechanism for implementing the functions/acts specified in the flowchart and/or block diagram block or blocks.

[0095] According to other embodiments, the UE may try beam failure recovery procedure M times. If still no BFRR response is received, UE may report beam failure to high layer, which may trigger RLF; the M is indicated in a system information or it can be sent to UE in RRC, MAC-CE or DCI signaling; the selected downlink beam pair link is spatial QCLed with the UL BPL used to send BFRR; the downlink beam pair link for base station to send BFRR response is indicated by UE in BFRR; each BFRR is associated with a BFRR response; all BFRRs are associated with one BFRR response in a UE selected DL BPL; each BFRR is associated with a BFRR response and all BFRRs are associated with one BFRR response in a UE selected DL BPL.

[0096] The computer-readable non-transitory media includes all types of computer readable media, including magnetic storage media, optical storage media, and solid state storage media and specifically excludes signals. It should be understood that the software can be installed in and sold with the device. Alternatively the software can be obtained and loaded into the device, including obtaining the software via a disc medium or from any manner of network or distribution system, including, for example, from a server owned by the software creator or from a server not owned but used by the software creator. The software can be stored on a server for distribution over the Internet, for example.

[0097] The terminology used herein is for the purpose of describing particular aspects only and is not intended to be limiting of the disclosure. As used herein, the singular forms "a", "an" and "the" are intended to include the plural forms as well, unless the context clearly indicates otherwise. It will be further understood that the terms "comprises" and/or "comprising," when used in this specification, specify the presence of stated features, integers, steps, operations, elements, and/or components, but do not preclude the presence or addition of one or more other features, integers, steps, operations, elements, components, and/or groups thereof.

[0098] The description of the present disclosure has been presented for purposes of illustration and description, but is not intended to be exhaustive or limited to the disclosure in the form disclosed. Many modifications and variations will be apparent to those of ordinary skill in the art without departing from the scope and spirit of the disclosure. The aspects of the disclosure herein were chosen and described in order to best explain the principles of the disclosure and the practical application, and to enable others of ordinary skill in the art to understand the disclosure with various modifications as are suited to the particular use contemplated.

[0099] For purposes of this document, each process associated with the disclosed technology may be performed continuously and by one or more computing devices. Each step in a process may be performed by the same or different computing devices as those used in other steps, and each step need not necessarily be performed by a single computing device.

[00100] Although the subject matter has been described in language specific to structural features and/or methodological acts, it is to be understood that the subject matter defined in the appended claims is not necessarily limited to the specific features or acts described above. Rather, the specific features and acts described above are disclosed as example forms of implementing the claims.

CLAIMS

What is claimed is:

1. A method for beam failure recovery in user equipment, comprising:

receiving spatial quasi co-located information between a downlink beam pair and an uplink beam pair from a base station;

sending a beam failure recovery request (BFRR) to the base station upon detection of a beam failure between the base station and the user equipment;

receiving an association indication between the downlink beam pair for a BFRR response and the uplink beam pair for the BFRR; and

monitoring one or more available candidate beams in which to receive the BFRR response from the base station, where the BFRR response is associated with the BFRR.

2. The method of claim 1, wherein when the spatial quasi co-located information is unavailable from the base station, deriving the spatial quasi co-located information based on received beam correspondence information.

3. The method of claim 1, wherein the user equipment monitors one or multiple physical downlink control channels (PDCCH) such that a demodulation reference signal of each PDCCH is spatially quasi co-located with a reference signal of one of the one or more available candidate beam.

4. The method of claim 3, wherein the available candidate beams are identified by the user equipment for data transmission.

5. The method of claim 1, wherein when the BFRR response is not received within a predetermined time period, the user equipment restarts the beam failure

recovery.

6. The method of claim 1, wherein upon detection of the beam failure, the BFRR is sent using a physical uplink control channel (PUCCH) in the uplink beam pair.

7. The method of claim 6, wherein when the BFRR is sent using the PUCCH, the user equipment identifies a downlink beam pair for the base station to send the BFRR response in the uplink beam pair.

8. The method of claim 1, further comprising selecting the one or more available candidate beams based on radio link quality.

9. The method of claim 1, wherein the association indication between the downlink beam pair for the BFRR response and the uplink beam pair for the BFRR is a time offset.

10. The method of claim 1, wherein the monitoring the one or more available candidate beams further includes monitoring for the BFRR response in the downlink beam pairs spatially quasi co-located with the BFRR in a time slot with a time offset to the BFRR.

11. The method of claim 1, wherein the association indication is conveyed during beam configuration signaling or pre-configured with system information over a physical broadcast channel.

12. The method of claim 1, wherein when two or more uplink beam pairs exist, each having a spatial quasi co-located downlink beam pair, further comprising

transmitting multiple BFRRs in two or more uplink beam pairs simultaneously.

13. The method of calm 1, wherein when two or more uplink beam pairs exist, each having a spatial quasi co-located downlink beam pair, further comprising transmitting multiple BFRRs in the uplink beam pairs in time division duplex (TDD).

14. A device, comprising:

a non-transitory memory storage comprising instructions; and

one or more processors in communication with the memory, wherein the one or more processors execute the instructions to:

receive spatial quasi co-located information between a downlink beam pair and an uplink beam pair from a base station;

send a beam failure recovery request (BFRR) to the base station upon detection of a beam failure between the base station and the device;

receive an association indication between the downlink beam pair for a BFRR response and the uplink beam pair for the BFRR; and

monitor one or more available candidate beams in which to receive the BFRR response from the base station, where the BFRR response is associated with the BFRR.

15. A non-transitory computer-readable medium storing computer instructions for beam failure recovery in user equipment, that when executed by one or more processors, cause the one or more processors to perform the steps of:

receiving spatial quasi co-located information between a downlink beam pair and an uplink beam pair from a base station;

sending a beam failure recovery request (BFRR) to the base station upon detection of a beam failure between the base station and the user equipment;

receiving an association indication between the downlink beam pair for a BFRR response and the uplink beam pair for the BFRR; and

monitoring one or more available candidate beams in which to receive the BFRR response from the base station, where the BFRR response is associated with the BFRR.

ABSTRACT

The disclosure relates to technology for beam failure recovery in user equipment. The user equipment receives spatial quasi co-located information between a downlink beam pair and an uplink beam pair from a base station. A beam failure recovery request (BFRR) is sent to a serving base station upon detection of the beam failure between the base station and the user equipment. The user equipment then receives an association indication between the downlink beam pair for a BFRR response and the uplink beam pair for the BFRR, and monitors one or more available candidate beams in which to receive the BFRR response from the base station, where the BFRR response is associated with the BFRR.

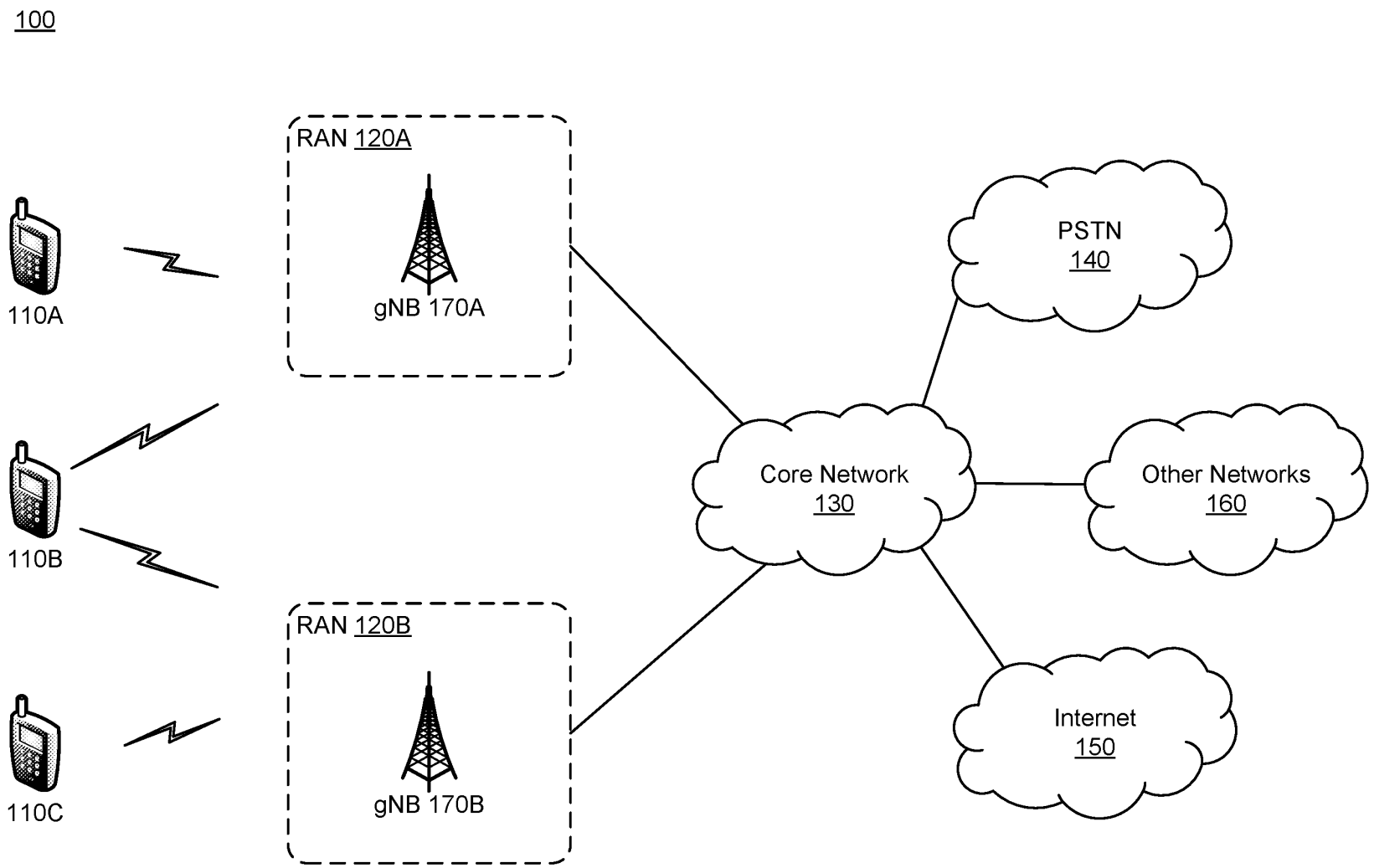
100
RAN 120A
gNB 170A
110A
110B
110C
RAN 120B
gNB 170B
Core Network
130
PSTN
140
Other Networks
160
Internet
150

FIG. 1

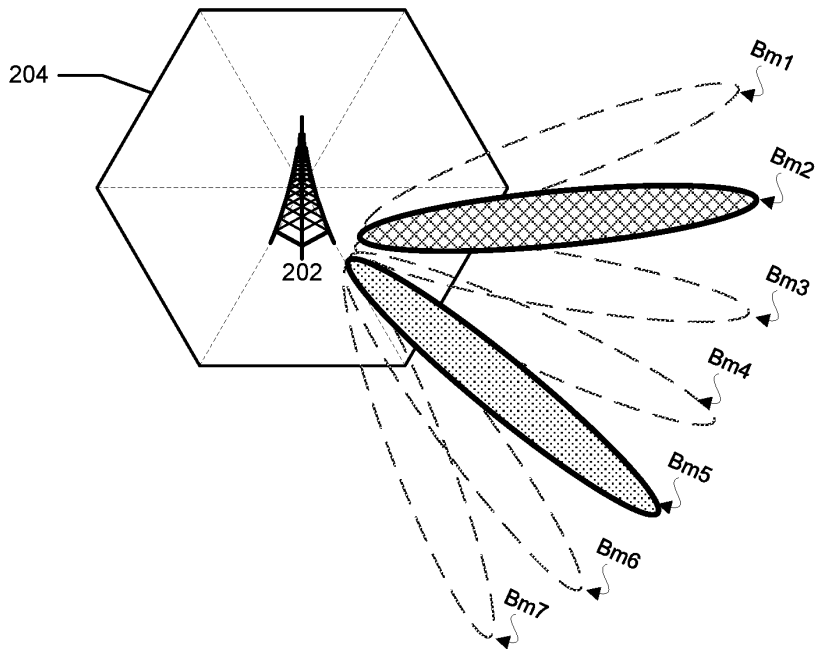
204
202
Bm1
Bm2
Bm3
Bm4
Bm5
Bm6
Bm7

FIG. 2

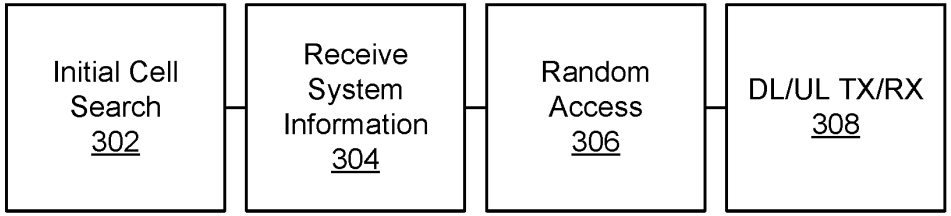
Initial Cell Search 302
Receive System Information 304
Random Access 306
DL/UL TX/RX 308

FIG. 3

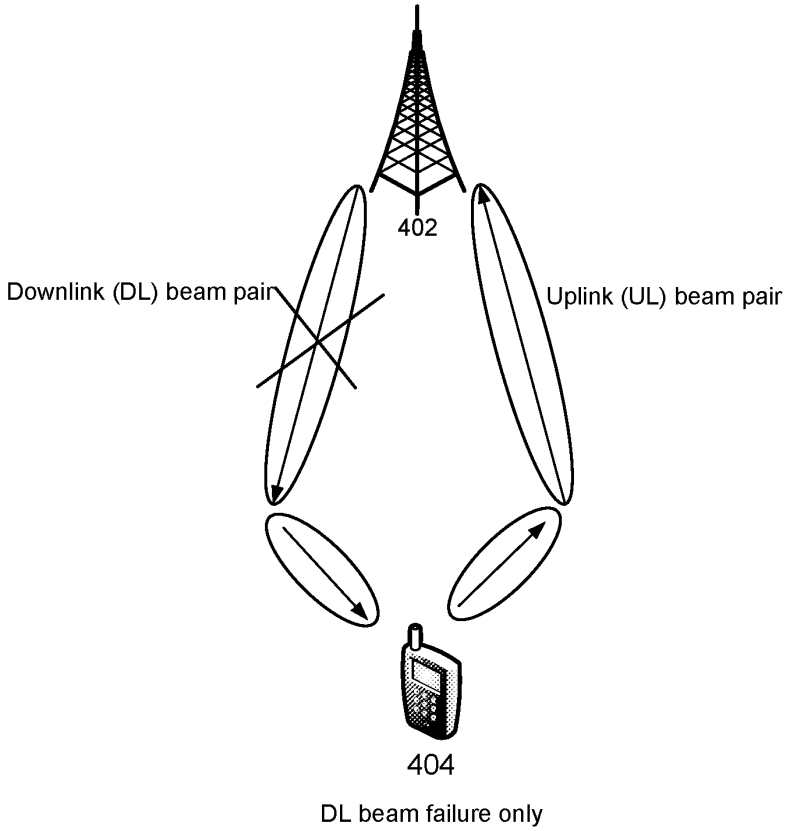
402
Downlink (DL) beam pair
Uplink (UL) beam pair
404
DL beam failure only

FIG. 4A

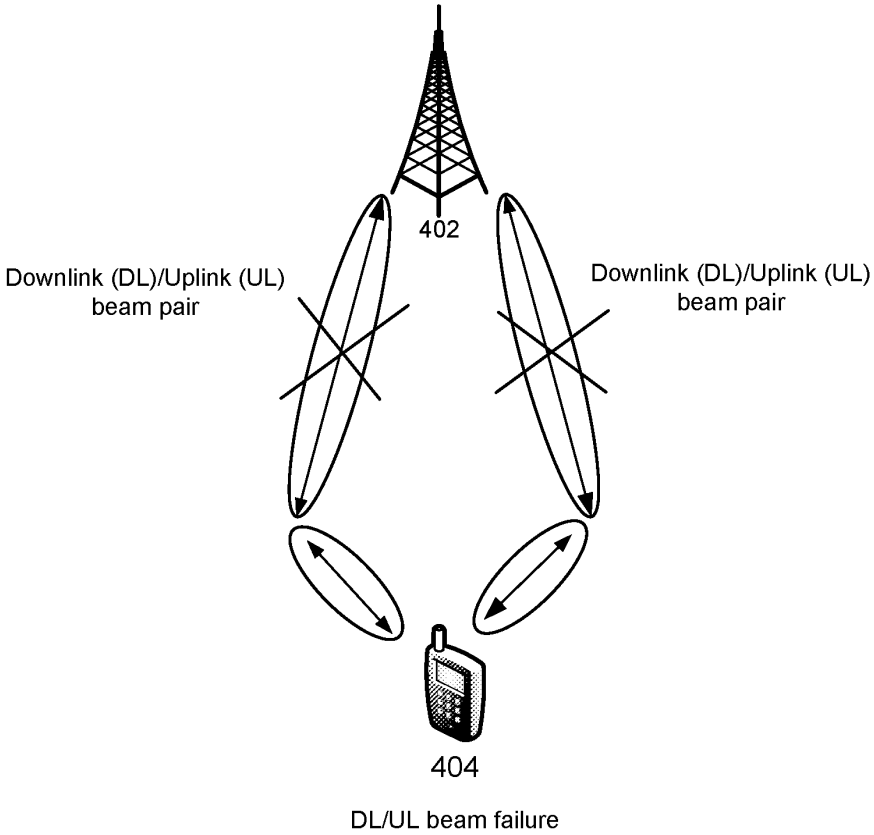
402
Downlink (DL)/Uplink (UL) beam pair
Downlink (DL)/Uplink (UL) beam pair
404
DL/UL beam failure

FIG. 4B

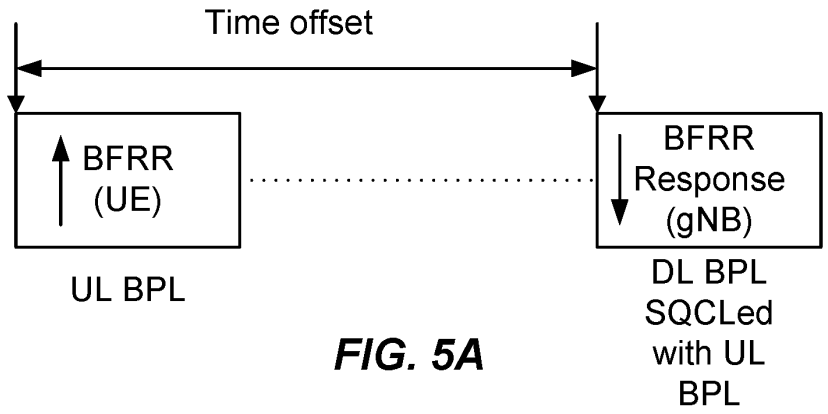
Time offset
BFRR
(UE)
BFRR
Response
(gNB)
UL BPL
DL BPL
SQCLed
with UL
BPL

FIG. 5A

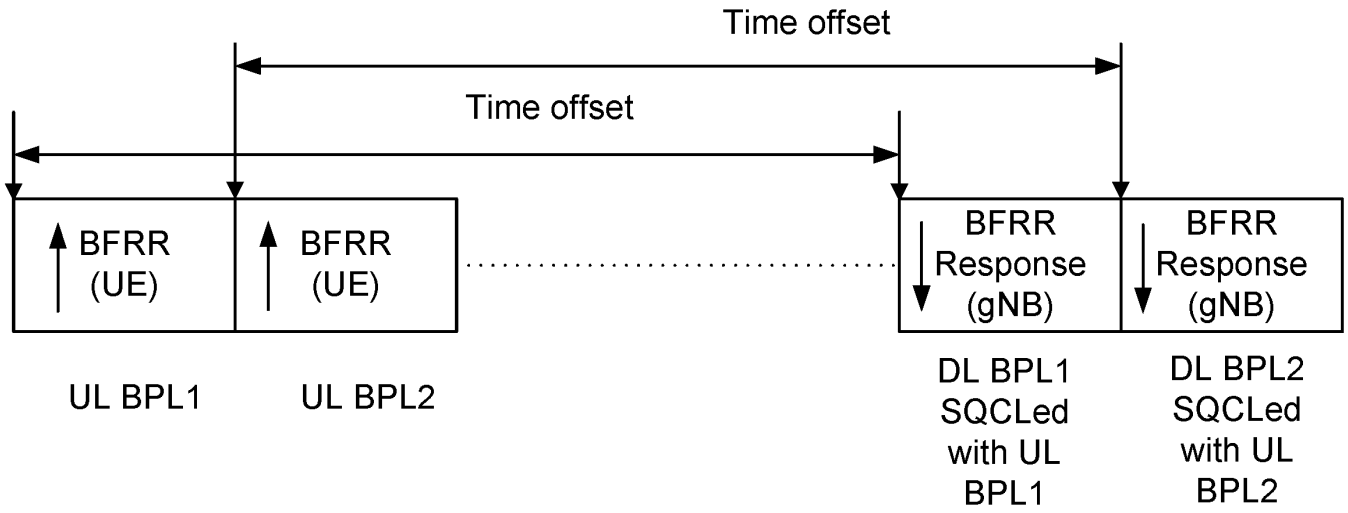
Time offset
Time offset
BFRR
(UE)
BFRR
(UE)
BFRR
Response
(gNB)
BFRR
Response
(gNB)
UL BPL1
UL BPL2
DL BPL1
SQCLed
with UL
BPL1
DL BPL2
SQCLed
with UL
BPL2

FIG. 5B

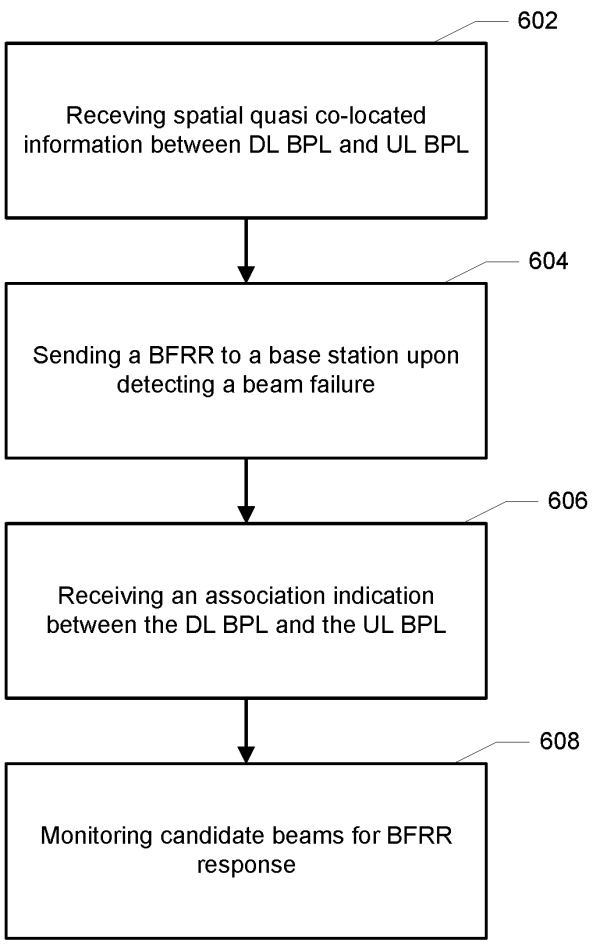

FIG. 6A

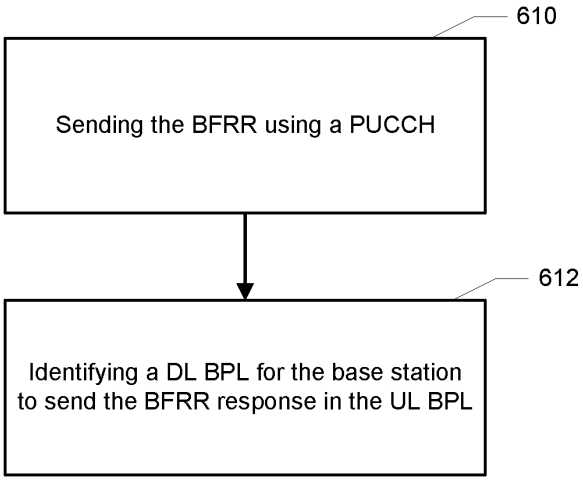

FIG. 6B

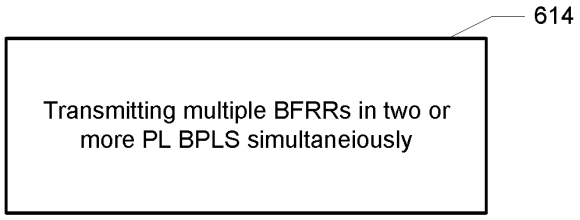

FIG. 6C

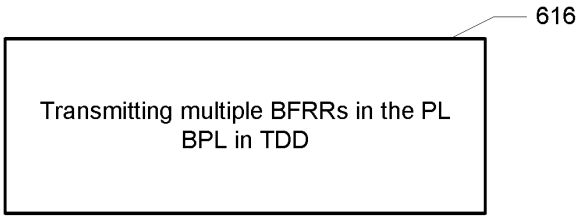

FIG. 6D

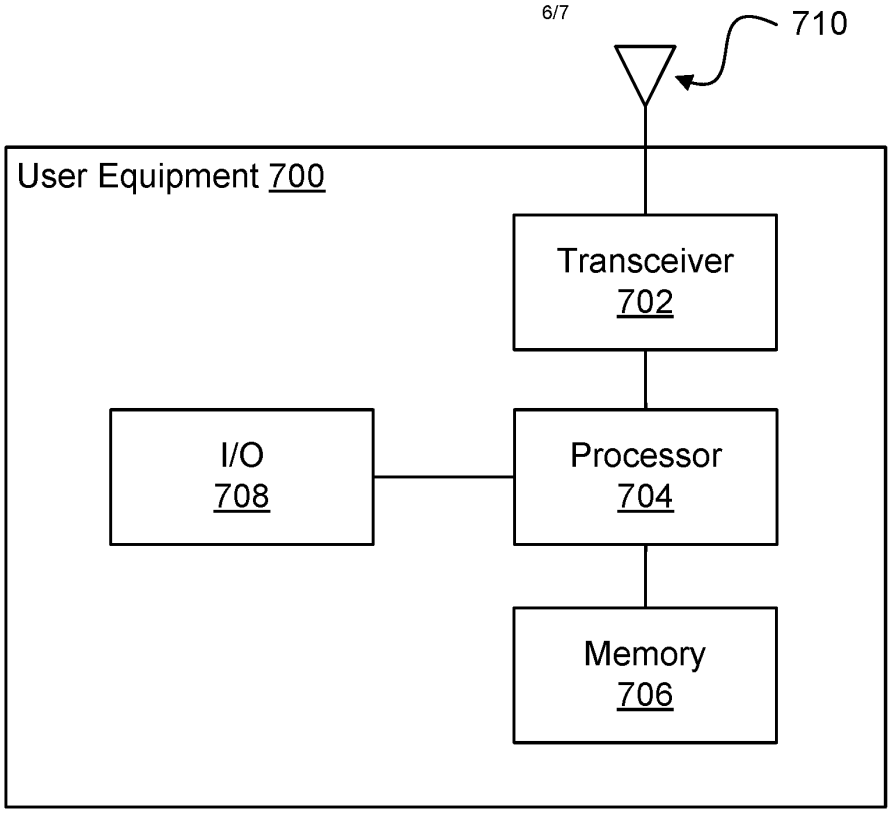
710
User Equipment 700
Transceiver
702
I/O
708
Processor
704
Memory
706

FIG. 7A

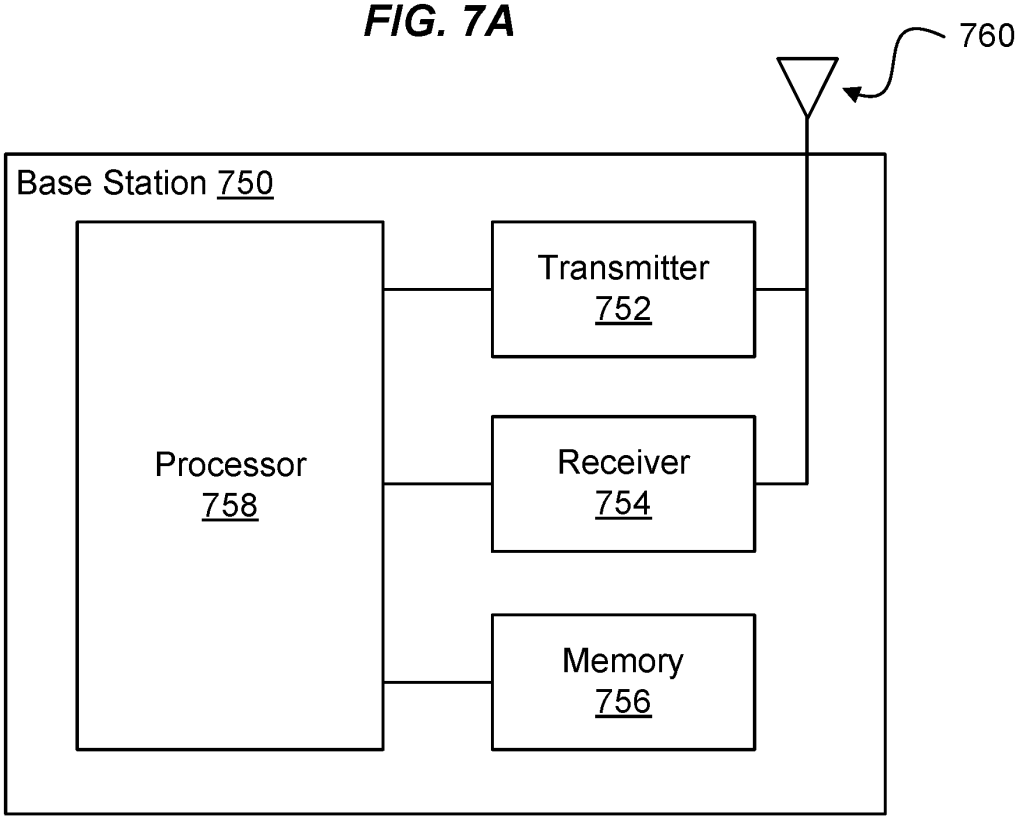
760
Base Station 750
Processor
758
Transmitter
752
Receiver
754
Memory
756

FIG. 7B

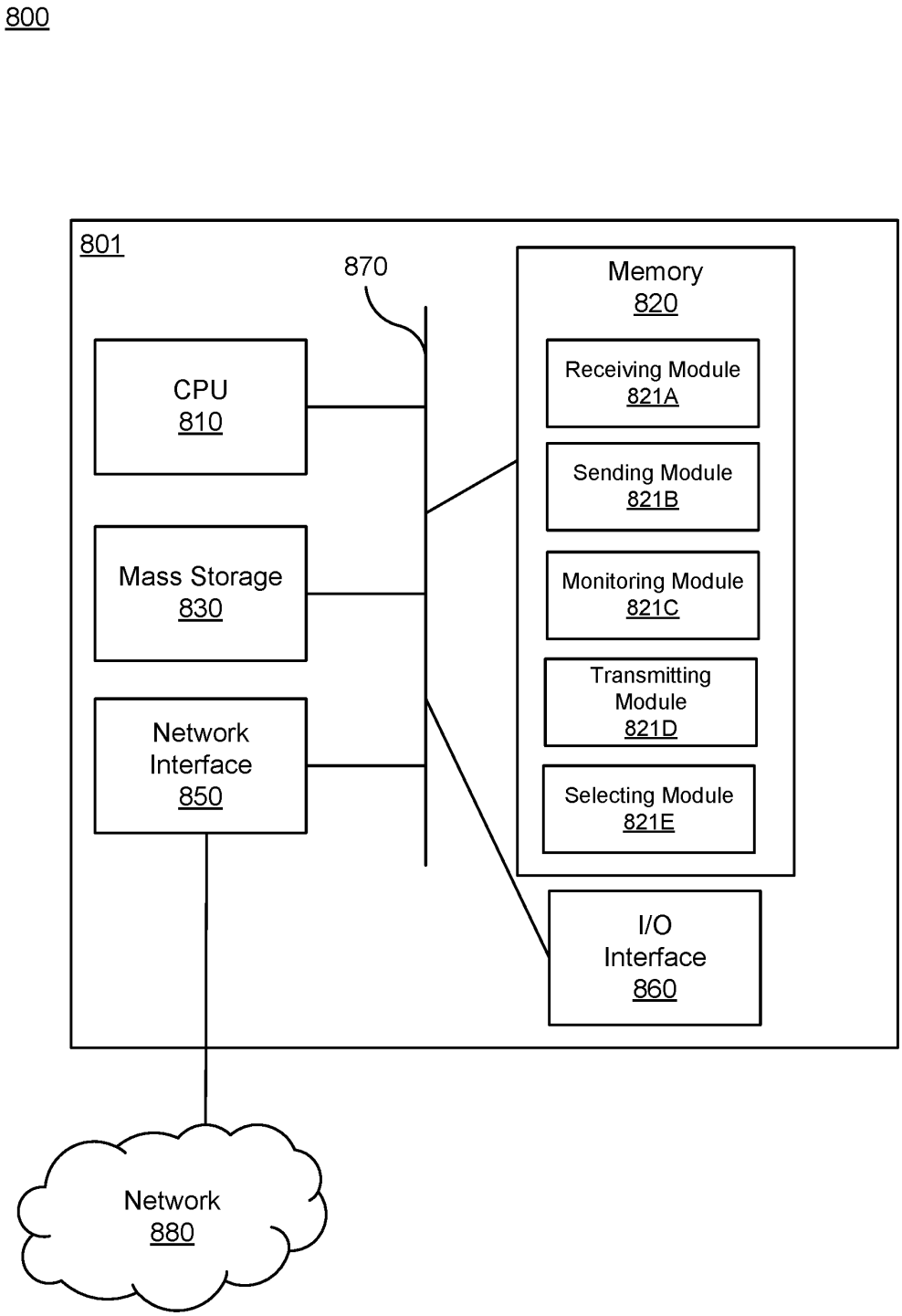
800
801
870
Memory
820
Receiving Module
821A
Sending Module
821B
Monitoring Module
821C
Transmitting Module
821D
Selecting Module
821E
CPU
810
Mass Storage
830
Network Interface
850
I/O Interface
860
Network
880

FIG. 8

PTO/AIA/14 (11-15)
Approved for use through 04/30/2017. OMB 0651-0032
U.S. Patent and Trademark Office; U.S. DEPARTMENT OF COMMERCE
Under the Paperwork Reduction Act of 1995, no persons are required to respond to a collection of information unless it contains a valid OMB control number.

Application Data Sheet 37 CFR 1.76	Attorney Docket Number	FTRW-01170US0
	Application Number	
Title of Invention	METHOD FOR RESPONSE TO PUCCH-BASED BEAM FAILURE RECOVERY REQUEST	

The application data sheet is part of the provisional or nonprovisional application for which it is being submitted. The following form contains the bibliographic data arranged in a format specified by the United States Patent and Trademark Office as outlined in 37 CFR 1.76.
This document may be completed electronically and submitted to the Office in electronic format using the Electronic Filing System (EFS) or the document may be printed and included in a paper filed application.

Secrecy Order 37 CFR 5.2:

☐ Portions or all of the application associated with this Application Data Sheet may fall under a Secrecy Order pursuant to 37 CFR 5.2 (Paper filers only. Applications that fall under Secrecy Order may not be filed electronically.)

Inventor Information:

Inventor 1 Remove

Legal Name

Prefix	Given Name	Middle Name	Family Name	Suffix
	Bin		Liu	

Residence Information (Select One) ● US Residency Non US Residency Active US Military Service

City	San Diego	State/Province	CA	Country of Residence i	US

Mailing Address of Inventor:

Address 1	5340 Legacy Drive		
Address 2	Suite 175		
City	Plano	State/Province	TX
Postal Code	75024	Country i	US

Inventor 2 Remove

Legal Name

Prefix	Given Name	Middle Name	Family Name	Suffix
	Pengfei		Xia	

Residence Information (Select One) ◉ US Residency Non US Residency Active US Military Service

City	San Diego	State/Province	CA	Country of Residence i	US

Mailing Address of Inventor:

Address 1	5340 Legacy Drive		
Address 2	Suite 175		
City	Plano	State/Province	TX
Postal Code	750024	Country i	US

Inventor 3 Remove

Legal Name

Prefix	Given Name	Middle Name	Family Name	Suffix
	Richard	Stirling	Gallacher	

Residence Information (Select One) ◉ US Residency Non US Residency Active US Military Service

PTO/AIA/14 (11-15)
Approved for use through 04/30/2017. OMB 0651-0032
U.S. Patent and Trademark Office; U.S. DEPARTMENT OF COMMERCE
Under the Paperwork Reduction Act of 1995, no persons are required to respond to a collection of information unless it contains a valid OMB control number.

Application Data Sheet 37 CFR 1.76	Attorney Docket Number	FTRW-01170US0
	Application Number	
Title of Invention	METHOD FOR RESPONSE TO PUCCH-BASED BEAM FAILURE RECOVERY REQUEST	

City	San Diego	**State/Province**	CA	**Country of Residence** i	US

Mailing Address of Inventor:

Address 1	5340 Legacy Drive		
Address 2	Suite 175		
City	Plano	**State/Province**	TX
Postal Code	750024	**Country** i	US

All Inventors Must Be Listed - Additional Inventor Information blocks may be generated within this form by selecting the **Add** button. Add

Correspondence Information:

Enter either Customer Number or complete the Correspondence Information section below.
For further information see 37 CFR 1.33(a).

☐ **An Address is being provided for the correspondence Information of this application.**

Customer Number	136309		
Email Address	patents@vierramagen.com	Add Email	Remove Email

Application Information:

Title of the Invention	METHOD FOR RESPONSE TO PUCCH-BASED BEAM FAILURE RECOVERY REQUEST		
Attorney Docket Number	FTRW-01170US0	**Small Entity Status Claimed**	☐
Application Type	Provisional		
Subject Matter	Utility		
Total Number of Drawing Sheets (if any)	7	**Suggested Figure for Publication (if any)**	

Filing By Reference:

Only complete this section when filing an application by reference under 35 U.S.C. 111(c) and 37 CFR 1.57(a). Do not complete this section if application papers including a specification and any drawings are being filed. Any domestic benefit or foreign priority information must be provided in the appropriate section(s) below (i.e., "Domestic Benefit/National Stage Information" and "Foreign Priority Information").

For the purposes of a filing date under 37 CFR 1.53(b), the description and any drawings of the present application are replaced by this reference to the previously filed application, subject to conditions and requirements of 37 CFR 1.57(a).

Application number of the previously filed application	Filing date (YYYY-MM-DD)	Intellectual Property Authority or Country i

Publication Information:

☐ Request Early Publication (Fee required at time of Request 37 CFR 1.219)

☐ **Request Not to Publish.** I hereby request that the attached application not be published under 35 U.S.C. 122(b) and certify that the invention disclosed in the attached application **has not and will not** be the subject of an application filed in another country, or under a multilateral international agreement, that requires publication at eighteen months after filing.

Under the Paperwork Reduction Act of 1995, no persons are required to respond to a collection of information unless it contains a valid OMB control number.

Application Data Sheet 37 CFR 1.76	Attorney Docket Number	FTRW-01170US0
	Application Number	
Title of Invention	METHOD FOR RESPONSE TO PUCCH-BASED BEAM FAILURE RECOVERY REQUEST	

Representative Information:

Representative information should be provided for all practitioners having a power of attorney in the application. Providing this information in the Application Data Sheet does not constitute a power of attorney in the application (see 37 CFR 1.32).
Either enter Customer Number or complete the Representative Name section below. If both sections are completed the customer Number will be used for the Representative Information during processing.

Please Select One:	● Customer Number	US Patent Practitioner	◯ Limited Recognition (37 CFR 11.9)
Customer Number	136309		

Domestic Benefit/National Stage Information:

This section allows for the applicant to either claim benefit under 35 U.S.C. 119(e), 120, 121, 365(c), or 386(c) or indicate National Stage entry from a PCT application. Providing benefit claim information in the Application Data Sheet constitutes the specific reference required by 35 U.S.C. 119(e) or 120, and 37 CFR 1.78.
When referring to the current application, please leave the "Application Number" field blank.

Prior Application Status			Remove
Application Number	Continuity Type	Prior Application Number	Filing or 371(c) Date (YYYY-MM-DD)

Additional Domestic Benefit/National Stage Data may be generated within this form by selecting the **Add** button. Add

Foreign Priority Information:

This section allows for the applicant to claim priority to a foreign application. Providing this information in the application data sheet constitutes the claim for priority as required by 35 U.S.C. 119(b) and 37 CFR 1.55. When priority is claimed to a foreign application that is eligible for retrieval under the priority document exchange program (PDX)[i] the information will be used by the Office to automatically attempt retrieval pursuant to 37 CFR 1.55(i)(1) and (2). Under the PDX program, applicant bears the ultimate responsibility for ensuring that a copy of the foreign application is received by the Office from the participating foreign intellectual property office, or a certified copy of the foreign priority application is filed, within the time period specified in 37 CFR 1.55(g)(1).

Remove

Application Number	Country[i]	Filing Date (YYYY-MM-DD)	Access Code[i] (if applicable)

Additional Foreign Priority Data may be generated within this form by selecting the **Add** button. Add

Application Data Sheet 37 CFR 1.76	Attorney Docket Number	FTRW-01170US0
	Application Number	
Title of Invention	METHOD FOR RESPONSE TO PUCCH-BASED BEAM FAILURE RECOVERY REQUEST	

Statement under 37 CFR 1.55 or 1.78 for AIA (First Inventor to File) Transition Applications

☐	This application (1) claims priority to or the benefit of an application filed before March 16, 2013 and (2) also contains, or contained at any time, a claim to a claimed invention that has an effective filing date on or after March 16, 2013. NOTE: By providing this statement under 37 CFR 1.55 or 1.78, this application, with a filing date on or after March 16, 2013, will be examined under the first inventor to file provisions of the AIA.

Application Data Sheet 37 CFR 1.76	Attorney Docket Number	FTRW-01170US0
	Application Number	
Title of Invention	METHOD FOR RESPONSE TO PUCCH-BASED BEAM FAILURE RECOVERY REQUEST	

Authorization or Opt-Out of Authorization to Permit Access:

When this Application Data Sheet is properly signed and filed with the application, applicant has provided written authority to permit a participating foreign intellectual property (IP) office access to the instant application-as-filed (see paragraph A in subsection 1 below) and the European Patent Office (EPO) access to any search results from the instant application (see paragraph B in subsection 1 below).

Should applicant choose not to provide an authorization identified in subsection 1 below, applicant **must opt-out** of the authorization by checking the corresponding box A or B or both in subsection 2 below.

NOTE: This section of the Application Data Sheet is **ONLY** reviewed and processed with the **INITIAL** filing of an application. After the initial filing of an application, an Application Data Sheet cannot be used to provide or rescind authorization for access by a foreign IP office(s). Instead, Form PTO/SB/39 or PTO/SB/69 must be used as appropriate.

1. Authorization to Permit Access by a Foreign Intellectual Property Office(s)

A. Priority Document Exchange (PDX) - Unless box A in subsection 2 (opt-out of authorization) is checked, the undersigned hereby **grants the USPTO authority** to provide the European Patent Office (EPO), the Japan Patent Office (JPO), the Korean Intellectual Property Office (KIPO), the State Intellectual Property Office of the People's Republic of China (SIPO), the World Intellectual Property Organization (WIPO), and any other foreign intellectual property office participating with the USPTO in a bilateral or multilateral priority document exchange agreement in which a foreign application claiming priority to the instant patent application is filed, access to: (1) the instant patent application-as-filed and its related bibliographic data, (2) any foreign or domestic application to which priority or benefit is claimed by the instant application and its related bibliographic data, and (3) the date of filing of this Authorization. See 37 CFR 1.14(h)(1).

B. Search Results from U.S. Application to EPO - Unless box B in subsection 2 (opt-out of authorization) is checked, the undersigned hereby **grants the USPTO authority** to provide the EPO access to the bibliographic data and search results from the instant patent application when a European patent application claiming priority to the instant patent application is filed. See 37 CFR 1.14(h)(2).

The applicant is reminded that the EPO's Rule 141(1) EPC (European Patent Convention) requires applicants to submit a copy of search results from the instant application without delay in a European patent application that claims priority to the instant application.

2. Opt-Out of Authorizations to Permit Access by a Foreign Intellectual Property Office(s)

☐ A. Applicant **DOES NOT** authorize the USPTO to permit a participating foreign IP office access to the instant application-as-filed. If this box is checked, the USPTO will not be providing a participating foreign IP office with any documents and information identified in subsection 1A above.

☐ B. Applicant **DOES NOT** authorize the USPTO to transmit to the EPO any search results from the instant patent application. If this box is checked, the USPTO will not be providing the EPO with search results from the instant application.

NOTE: Once the application has published or is otherwise publicly available, the USPTO may provide access to the application in accordance with 37 CFR 1.14.

Under the Paperwork Reduction Act of 1995, no persons are required to respond to a collection of information unless it contains a valid OMB control number.

Application Data Sheet 37 CFR 1.76	Attorney Docket Number	FTRW-01170US0
	Application Number	
Title of Invention	METHOD FOR RESPONSE TO PUCCH-BASED BEAM FAILURE RECOVERY REQUEST	

Applicant Information:

Providing assignment information in this section does not substitute for compliance with any requirement of part 3 of Title 37 of CFR to have an assignment recorded by the Office.

Applicant 1 Remove

If the applicant is the inventor (or the remaining joint inventor or inventors under 37 CFR 1.45), this section should not be completed. The information to be provided in this section is the name and address of the legal representative who is the applicant under 37 CFR 1.43; or the name and address of the assignee, person to whom the inventor is under an obligation to assign the invention, or person who otherwise shows sufficient proprietary interest in the matter who is the applicant under 37 CFR 1.46. If the applicant is an applicant under 37 CFR 1.46 (assignee, person to whom the inventor is obligated to assign, or person who otherwise shows sufficient proprietary interest) together with one or more joint inventors, then the joint inventor or inventors who are also the applicant should be identified in this section.

Clear

Assignee	Legal Representative under 35 U.S.C. 117	Joint Inventor
● Person to whom the inventor is obligated to assign.	Person who shows sufficient proprietary interest	

If applicant is the legal representative, indicate the authority to file the patent application, the inventor is:

Name of the Deceased or Legally Incapacitated Inventor:

If the Applicant is an Organization check here. ☒

Organization Name	Futurewei Technologies, Inc.		
Mailing Address Information For Applicant:			
Address 1	6340 Legacy Drive		
Address 2	Suite 175		
City	Plano	**State/Province**	TX
Country	US	Postal Code	75024
Phone Number		Fax Number	
Email Address			

Additional Applicant Data may be generated within this form by selecting the Add button. Add

Assignee Information including Non-Applicant Assignee Information:

Providing assignment information in this section does not substitute for compliance with any requirement of part 3 of Title 37 of CFR to have an assignment recorded by the Office.

Application Data Sheet 37 CFR 1.76	Attorney Docket Number	FTRW-01170US0
	Application Number	
Title of Invention	METHOD FOR RESPONSE TO PUCCH-BASED BEAM FAILURE RECOVERY REQUEST	

Assignee 1

Complete this section if assignee information, including non-applicant assignee information, is desired to be included on the patent application publication. An assignee-applicant identified in the "Applicant Information" section will appear on the patent application publication as an applicant. For an assignee-applicant, complete this section only if identification as an assignee is also desired on the patent application publication.

Remove

If the Assignee or Non-Applicant Assignee is an Organization check here. ☒

Organization Name	Futurewei Technologies, Inc.

Mailing Address Information For Assignee including Non-Applicant Assignee:

Address 1	6340 Legacy Drive		
Address 2	Suite 175		
City	Plano	**State/Province**	TX
Country i	US	Postal Code	75024
Phone Number		Fax Number	
Email Address			

Additional Assignee or Non-Applicant Assignee Data may be generated within this form by selecting the Add button. Add

Signature:

Remove

NOTE: This Application Data Sheet must be signed in accordance with 37 CFR 1.33(b). **However, if this Application Data Sheet is submitted with the INITIAL filing of the application and either box A or B is not checked in subsection 2 of the "Authorization or Opt-Out of Authorization to Permit Access" section, then this form must also be signed in accordance with 37 CFR 1.14(c).**

This Application Data Sheet **must** be signed by a patent practitioner if one or more of the applicants is a **juristic entity** (e.g., corporation or association). If the applicant is two or more joint inventors, this form must be signed by a patent practitioner, **all** joint inventors who are the applicant, or one or more joint inventor-applicants who have been given power of attorney (e.g., see USPTO Form PTO/AIA/81) on behalf of **all** joint inventor-applicants.

See 37 CFR 1.4(d) for the manner of making signatures and certifications.

Signature	/Kevin R. Spivak/			Date (YYYY-MM-DD)	2017-06-16
First Name	Kevin	Last Name	Spivak	Registration Number	43148

Additional Signature may be generated within this form by selecting the Add button. Add

Application Data Sheet 37 CFR 1.76	Attorney Docket Number	FTRW-01170US0
	Application Number	
Title of Invention	METHOD FOR RESPONSE TO PUCCH-BASED BEAM FAILURE RECOVERY REQUEST	

This collection of information is required by 37 CFR 1.76. The information is required to obtain or retain a benefit by the public which is to file (and by the USPTO to process) an application. Confidentiality is governed by 35 U.S.C. 122 and 37 CFR 1.14. This collection is estimated to take 23 minutes to complete, including gathering, preparing, and submitting the completed application data sheet form to the USPTO. Time will vary depending upon the individual case. Any comments on the amount of time you require to complete this form and/or suggestions for reducing this burden, should be sent to the Chief Information Officer, U.S. Patent and Trademark Office, U.S. Department of Commerce, P.O. Box 1450, Alexandria, VA 22313-1450. DO NOT SEND FEES OR COMPLETED FORMS TO THIS ADDRESS. **SEND TO: Commissioner for Patents, P.O. Box 1450, Alexandria, VA 22313-1450.**

Privacy Act Statement

The Privacy Act of 1974 (P.L. 93-579) requires that you be given certain information in connection with your submission of the attached form related to a patent application or patent. Accordingly, pursuant to the requirements of the Act, please be advised that: (1) the general authority for the collection of this information is 35 U.S.C. 2(b)(2); (2) furnishing of the information solicited is voluntary; and (3) the principal purpose for which the information is used by the U.S. Patent and Trademark Office is to process and/or examine your submission related to a patent application or patent. If you do not furnish the requested information, the U.S. Patent and Trademark Office may not be able to process and/or examine your submission, which may result in termination of proceedings or abandonment of the application or expiration of the patent.

The information provided by you in this form will be subject to the following routine uses:

1 The information on this form will be treated confidentially to the extent allowed under the Freedom of Information Act (5 U.S.C. 552) and the Privacy Act (5 U.S.C. 552a). Records from this system of records may be disclosed to the Department of Justice to determine whether the Freedom of Information Act requires disclosure of these records.

2. A record from this system of records may be disclosed, as a routine use, in the course of presenting evidence to a court, magistrate, or administrative tribunal, including disclosures to opposing counsel in the course of settlement negotiations.

3 A record in this system of records may be disclosed, as a routine use, to a Member of Congress submitting a request involving an individual, to whom the record pertains, when the individual has requested assistance from the Member with respect to the subject matter of the record.

4. A record in this system of records may be disclosed, as a routine use, to a contractor of the Agency having need for the information in order to perform a contract. Recipients of information shall be required to comply with the requirements of the Privacy Act of 1974, as amended, pursuant to 5 U.S.C. 552a(m).

5. A record related to an International Application filed under the Patent Cooperation Treaty in this system of records may be disclosed, as a routine use, to the International Bureau of the World Intellectual Property Organization, pursuant to the Patent CooperationTreaty.

6. A record in this system of records may be disclosed, as a routine use, to another federal agency for purposes of National Security review (35 U.S.C. 181) and for review pursuant to the Atomic Energy Act (42 U.S.C. 218(c)).

7. A record from this system of records may be disclosed, as a routine use, to the Administrator, General Services, or his/her designee, during an inspection of records conducted by GSA as part of that agency's responsibility to recommend improvements in records management practices and programs, under authority of 44 U.S.C. 2904 and 2906. Such disclosure shall be made in accordance with the GSA regulations governing inspection of records for this purpose, and any other relevant (i.e., GSA or Commerce) directive. Such disclosure shall not be used to make determinations about individuals.

8. A record from this system of records may be disclosed, as a routine use, to the public after either publication of the application pursuant to 35 U.S.C. 122(b) or issuance of a patent pursuant to 35 U.S.C. 151. Further, a record may be disclosed, subject to the limitations of 37 CFR 1.14, as a routine use, to the public if the record was filed in an application which became abandoned or in which the proceedings were terminated and which application is referenced by either a published application, an application open to public inspections or an issued patent.

9. A record from this system of records may be disclosed, as a routine use, to a Federal, State, or local law enforcement agency, if the USPTO becomes aware of a violation or potential violation of law or regulation.

Electronic Patent Application Fee Transmittal

Application Number:	
Filing Date:	
Title of Invention:	METHOD FOR RESPONSE TO PUCCH-BASED BEAM FAILURE RECOVERY REQUEST
First Named Inventor/Applicant Name:	Bin Liu
Filer:	Kevin Richard Spivak/Evelyn Gomez
Attorney Docket Number:	

Filed as Large Entity

Filing Fees for Provisional

Description	Fee Code	Quantity	Amount	Sub-Total in USD($)
Basic Filing:				
PROVISIONAL APPLICATION FILING	1005	1	260	260
Pages:				
Claims:				
Miscellaneous-Filing:				
Petition:				
Patent-Appeals-and-Interference:				
Post-Allowance-and-Post-Issuance:				

Description	Fee Code	Quantity	Amount	Sub-Total in USD($)
Extension-of-Time:				
Miscellaneous:				
			Total in USD ($)	**260**

Electronic Acknowledgement Receipt	
EFS ID:	29527584
Application Number:	62521170
International Application Number:	
Confirmation Number:	9896
Title of Invention:	METHOD FOR RESPONSE TO PUCCH-BASED BEAM FAILURE RECOVERY REQUEST
First Named Inventor/Applicant Name:	Bin Liu
Customer Number:	136309
Filer:	Kevin Richard Spivak
Filer Authorized By:	
Attorney Docket Number:	
Receipt Date:	16-JUN-2017
Filing Date:	
Time Stamp:	18:13:19
Application Type:	Provisional

Payment information:

Submitted with Payment	yes
Payment Type	CARD
Payment was successfully received in RAM	$260
RAM confirmation Number	061917INTEFSW18135500
Deposit Account	
Authorized User	
The Director of the USPTO is hereby authorized to charge indicated fees and credit any overpayment as follows:	

File Listing:

Document Number	Document Description	File Name	File Size(Bytes)/ Message Digest	Multi Part /.zip	Pages (if appl.)
1		1170-ProvApp.pdf	186314 90257160a1ec509592e1d41d46e965a2d4453628	yes	30
	Multipart Description/PDF files in .zip description				
	Document Description		**Start**	**End**	
	Specification		1	25	
	Claims		26	29	
	Abstract		30	30	
Warnings:					
Information:					
2	Drawings-only black and white line drawings	1170-Drawings.pdf	158684 15928e13c46e586381c2355730618ef6a7da4c93	no	7
Warnings:					
Information:					
3	Application Data Sheet	1170-ADS.pdf	1823167 3df1a7f93e6be4770a882a734da036b44f1438c3	no	9
Warnings:					
Information:					
4	Fee Worksheet (SB06)	fee-info.pdf	30030 f592e0958581541f9ae1dc2a08744fd93561bee9	no	2
Warnings:					
Information:					
		Total Files Size (in bytes):	2198195		

This Acknowledgement Receipt evidences receipt on the noted date by the USPTO of the indicated documents, characterized by the applicant, and including page counts, where applicable. It serves as evidence of receipt similar to a Post Card, as described in MPEP 503.

New Applications Under 35 U.S.C. 111
If a new application is being filed and the application includes the necessary components for a filing date (see 37 CFR 1.53(b)-(d) and MPEP 506), a Filing Receipt (37 CFR 1.54) will be issued in due course and the date shown on this Acknowledgement Receipt will establish the filing date of the application.
National Stage of an International Application under 35 U.S.C. 371
If a timely submission to enter the national stage of an international application is compliant with the conditions of 35 U.S.C. 371 and other applicable requirements a Form PCT/DO/EO/903 indicating acceptance of the application as a national stage submission under 35 U.S.C. 371 will be issued in addition to the Filing Receipt, in due course.
New International Application Filed with the USPTO as a Receiving Office
If a new international application is being filed and the international application includes the necessary components for an international filing date (see PCT Article 11 and MPEP 1810), a Notification of the International Application Number and of the International Filing Date (Form PCT/RO/105) will be issued in due course, subject to prescriptions concerning national security, and the date shown on this Acknowledgement Receipt will establish the international filing date of the application.