US010912081B2

(12) **United States Patent**
Zhang

(10) **Patent No.: US 10,912,081 B2**
(45) **Date of Patent: Feb. 2, 2021**

(54) **METHOD AND DEVICE USED FOR WIRELESS COMMUNICATION IN UE AND BASE STATION**

(71) Applicant: **Shanghai Langbo Communication Technology Company Limited**, Shanghai (CN)

(72) Inventor: **Xiaobo Zhang**, Shanghai (CN)

(73) Assignee: **SHANGHAI LANGBO COMMUNICATION TECHNOLOGY COMPANY LIMITED**, Shanghai (CN)

(*) Notice: Subject to any disclaimer, the term of this patent is extended or adjusted under 35 U.S.C. 154(b) by 220 days.

(21) Appl. No.: **15/972,167**

(22) Filed: **May 6, 2018**

(65) **Prior Publication Data**

US 2018/0324798 A1 Nov. 8, 2018

(30) **Foreign Application Priority Data**

May 8, 2017 (CN) 2017 1 0318202

(51) **Int. Cl.**
H04W 72/04 (2009.01)
H04W 24/02 (2009.01)
(Continued)

(52) **U.S. Cl.**
CPC ***H04W 72/0446*** (2013.01); ***H04B 7/0617*** (2013.01); ***H04L 5/0023*** (2013.01);
(Continued)

(58) **Field of Classification Search**
CPC H04W 24/02; H04W 72/042; H04W 72/0446; H04L 5/0023; H04L 27/2602;
(Continued)

(56) **References Cited**

U.S. PATENT DOCUMENTS

2015/0124736 A1 5/2015 Ko et al.
2018/0083680 A1* 3/2018 Guo H04B 7/0626

FOREIGN PATENT DOCUMENTS

CN 101771437 A 7/2010
CN 106550445 A 3/2017

OTHER PUBLICATIONS

CN Search Report in application No. 201710318202.4 dated Feb. 13, 2020.

(Continued)

Primary Examiner — Mandish K Randhawa
(74) *Attorney, Agent, or Firm* — Maschoff Brennan

(57) **ABSTRACT**

The present disclosure provides a method and a device used for wireless communication in a base station and a User Equipment (UE). The UE receives a first radio signal, wherein the first radio signal is transmitted within a first time unit, a first bit block is used for generating the first radio signal, and the first radio signal comprises G multicarrier symbols. As for any one given multicarrier symbol of the G multicarrier symbols, the multi-antenna related receiving for the given multicarrier symbol is related to the relative position of a time-domain resource occupied by the given multicarrier symbol with respect to a first time point in time domain. The first time point is one time point within the first time unit. The present disclosure increases the dynamic of the multi-antenna related receiving.

12 Claims, 6 Drawing Sheets

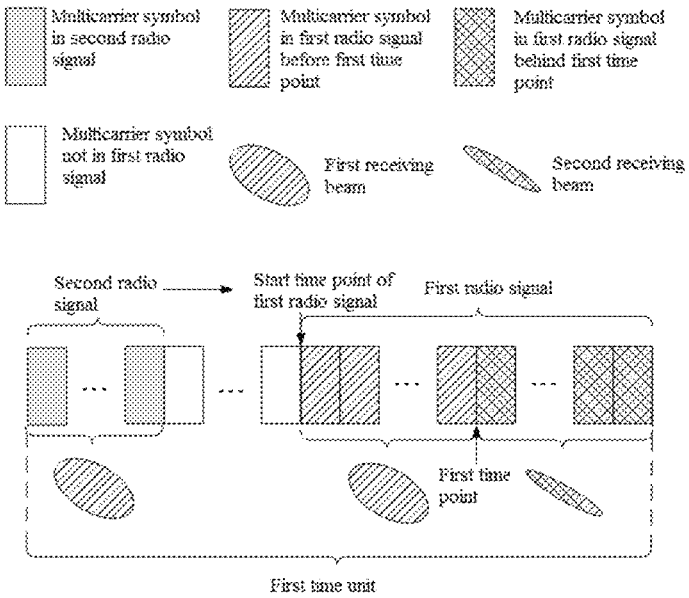

APPLE 1001

(51) **Int. Cl.**

H04L 5/00	(2006.01)
H04L 27/26	(2006.01)
H04B 7/06	(2006.01)
H04B 7/08	(2006.01)

(52) **U.S. Cl.**
CPC ***H04L 27/2602*** (2013.01); ***H04W 24/02*** (2013.01); ***H04W 72/042*** (2013.01); *H04B 7/0695* (2013.01); *H04B 7/088* (2013.01); *H04L 5/001* (2013.01)

(58) **Field of Classification Search**
CPC H04L 5/001; H04B 7/0617; H04B 7/0695; H04B 7/088
See application file for complete search history.

(56) **References Cited**

OTHER PUBLICATIONS

CN Office Action in Application No. 201710318202.4 dated Feb. 26, 2020.
CN Notice of Granting Patent Right in Application No. 201710318202.4 dated Apr. 28, 2020.

* cited by examiner

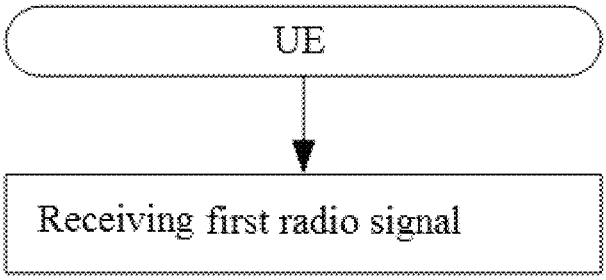
UE
Receiving first radio signal

FIG. 1

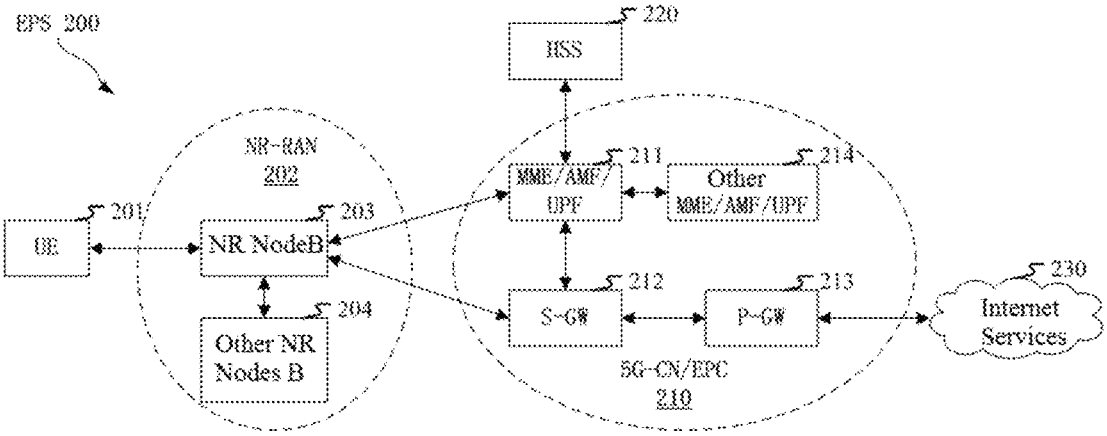
EPS 200
220
HSS
NR-RAN
202
211
MME/AMF/
UPF
214
Other
MME/AMF/UPF
201
UE
203
NR NodeB
212
213
230
S-GW
P-GW
Internet
Services
204
Other NR
Nodes B
5G-CN/EPC
210

FIG. 2

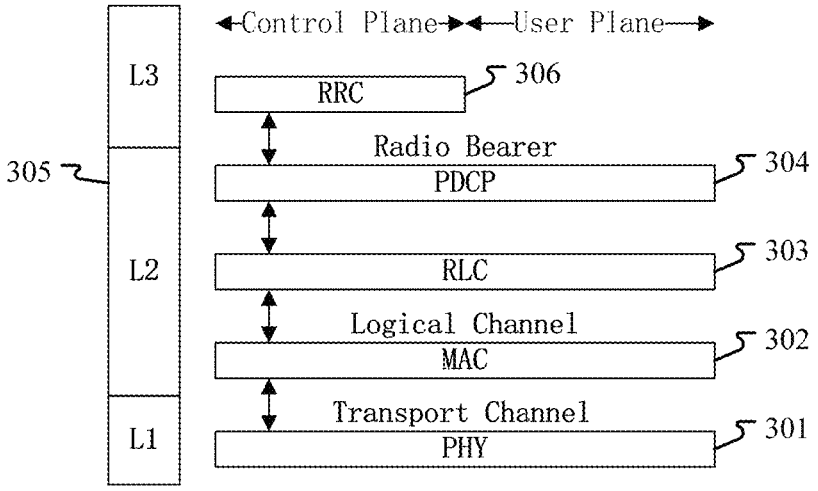
Control Plane
User Plane
L3
L2
L1
305
RRC
306
Radio Bearer
PDCP
304
RLC
303
Logical Channel
MAC
302
Transport Channel
PHY
301

FIG. 3

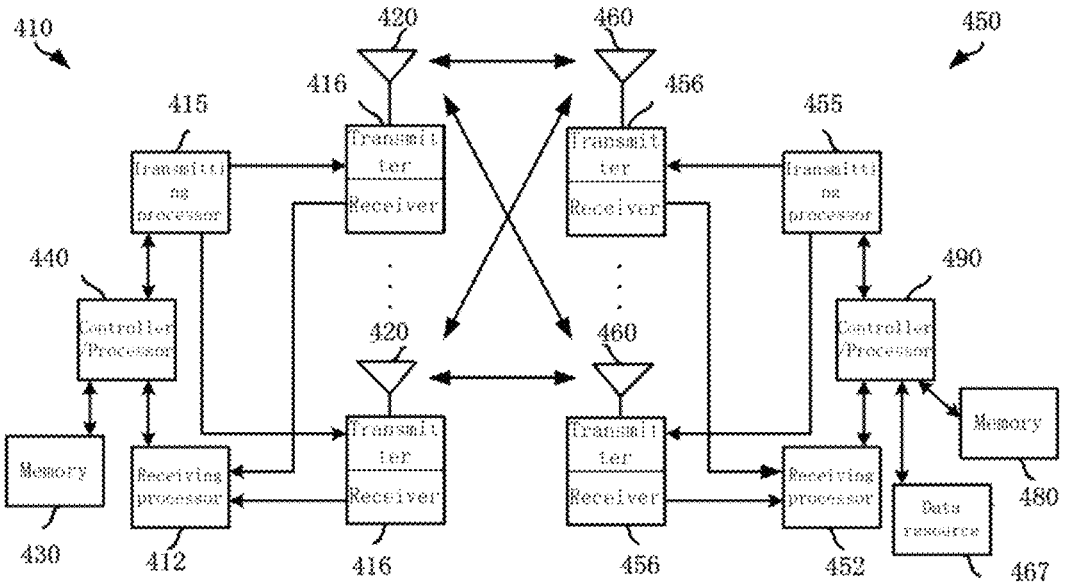
410
420
460
450
416
456
415
455
Transmitting processor
Transmitter Receiver
Transmitter Receiver
Transmitting processor
440
490
Controller/Processor
Controller/Processor
420
460
Memory
Receiving processor
Transmitter Receiver
Transmitter Receiver
Receiving processor
Memory
Data source
430
412
416
456
452
480
467

FIG. 4

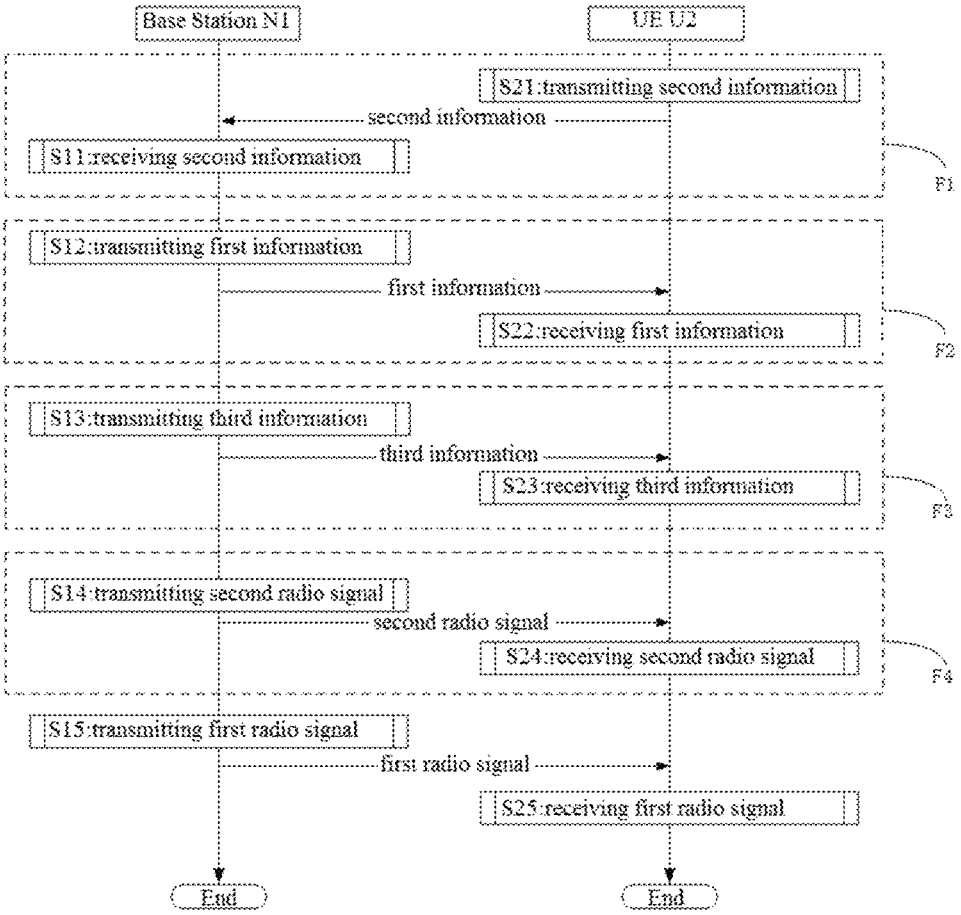
Base Station N1
UE U2
S21:transmitting second information
second information
S11:receiving second information
F1
S12:transmitting first information
first information
S22:receiving first information
F2
S13:transmitting third information
third information
S23:receiving third information
F3
S14:transmitting second radio signal
second radio signal
S24:receiving second radio signal
F4
S15:transmitting first radio signal
first radio signal
S25:receiving first radio signal
End
End

FIG. 5

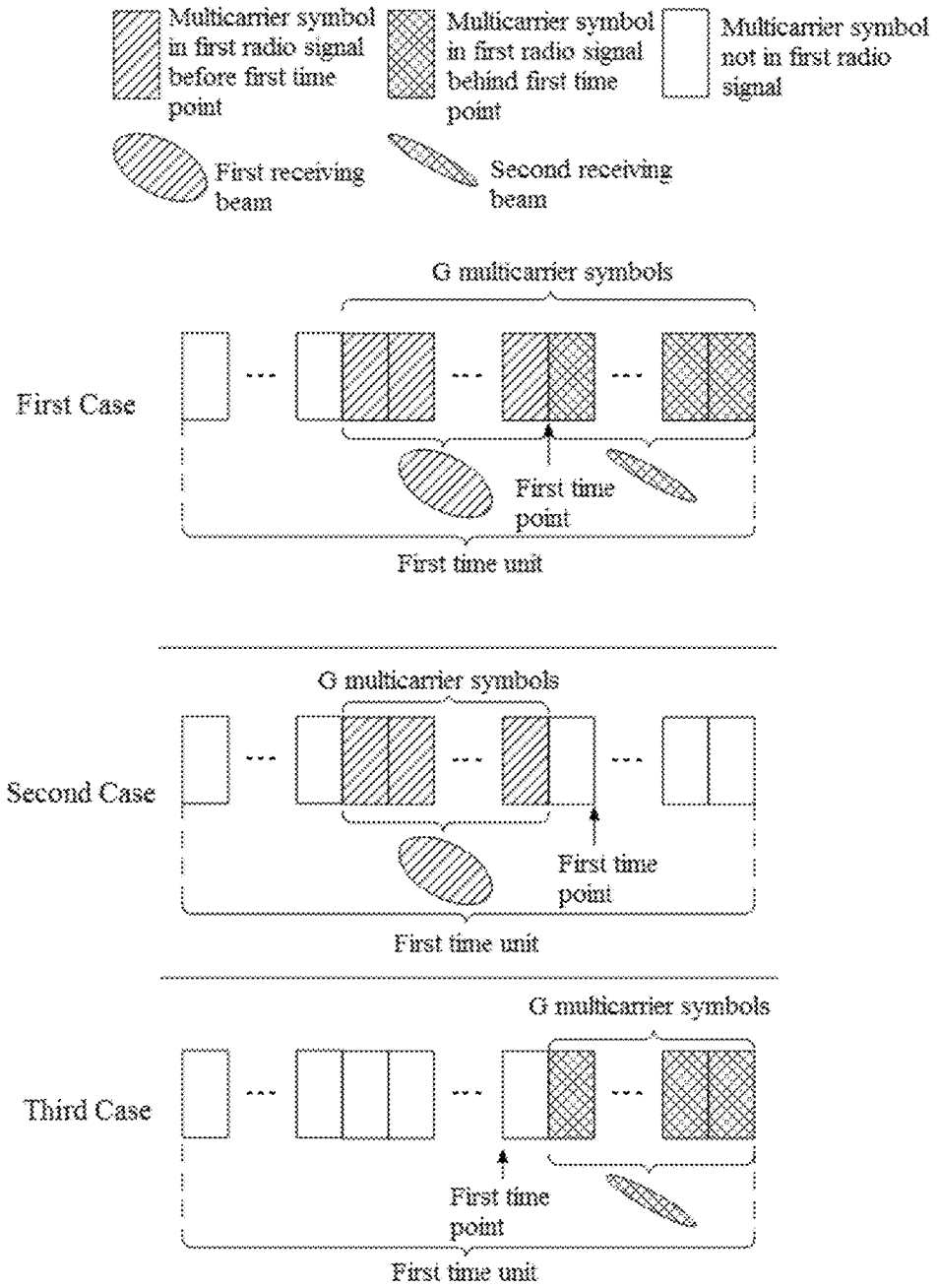
Multicarrier symbol in first radio signal before first time point
Multicarrier symbol in first radio signal behind first time point
Multicarrier symbol not in first radio signal
First receiving beam
Second receiving beam
G multicarrier symbols
First Case
First time point
First time unit
G multicarrier symbols
Second Case
First time point
First time unit
G multicarrier symbols
Third Case
First time point
First time unit

FIG. 6

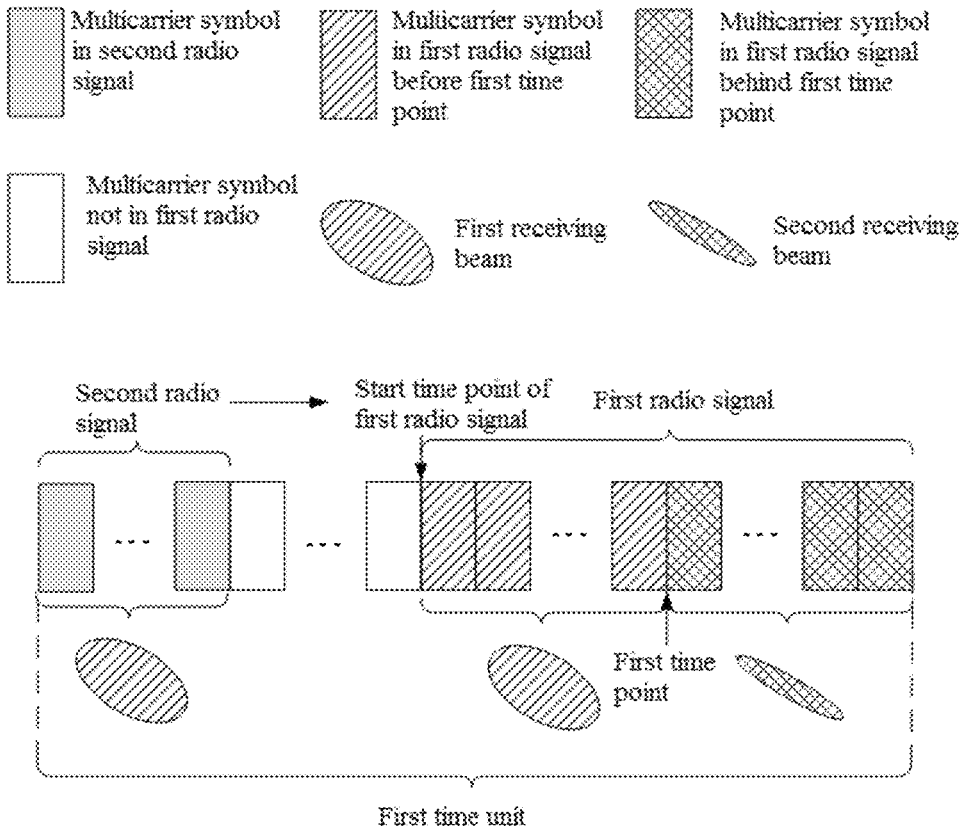
Multicarrier symbol in second radio signal
Multicarrier symbol in first radio signal before first time point
Multicarrier symbol in first radio signal behind first time point
Multicarrier symbol not in first radio signal
First receiving beam
Second receiving beam
Second radio signal
Start time point of first radio signal
First radio signal
First time point
First time unit

FIG. 7

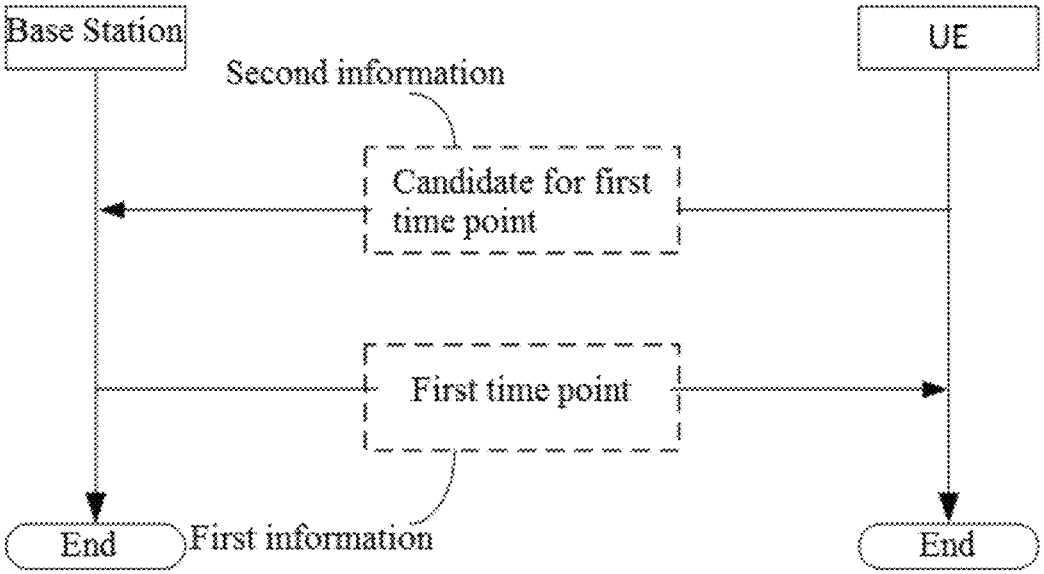

FIG. 8

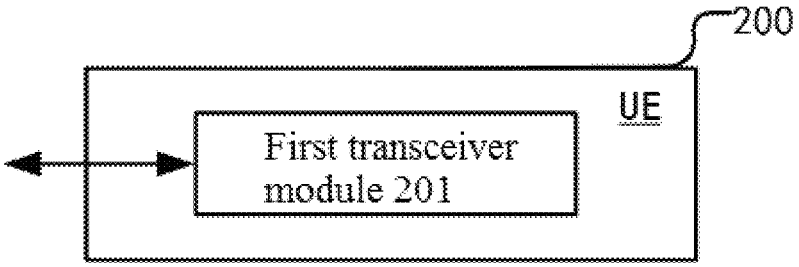

FIG. 9

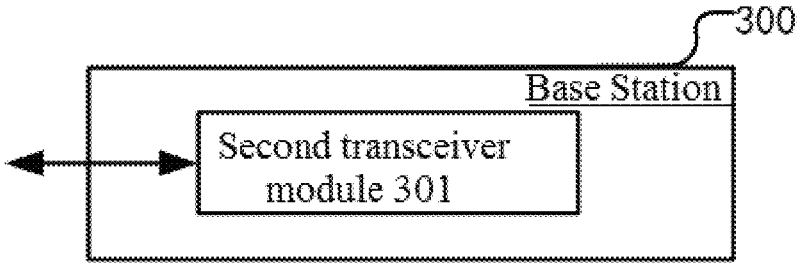

FIG. 10

METHOD AND DEVICE USED FOR WIRELESS COMMUNICATION IN UE AND BASE STATION

CROSS REFERENCE TO RELATED DISCLOSURE

This disclosure claims the priority benefit of Chinese Patent Application 201710318202.4, filed on May 8, 2017, all of which is incorporated herein by reference.

BACKGROUND

Technical Field

The present disclosure relates to transmission schemes of radio signals in wireless communication systems, and in particular to a method and a device for multi-antenna transmission.

Related Art

Massive Multi-Input Multi-Output (MIMO) becomes one research hotspot of next-generation mobile communications. In the massive MIMO, multiple antennas experience beamforming to form a relatively narrow beam which points to a particular direction to improve the quality of communication. The massive MIMO can also form different directions through multiple antennas to serve multiple users simultaneously, thereby forming Multi-User MIMO (MU-MIMO), and thus improving the throughput of the massive MIMO system and reducing the delay of transmission.

In 3GPP New Radio discussion, there is some company proposing to increase the robustness of transmission using a relatively wide beam transmitting Physical Downlink Control Channel (PDCCH) and to increase the Signal-to-Noise Ratio (SNR) using a relatively narrow beam transmitting Physical Downlink Shared Channel (PDSCH). There is also some company proposing to use the PDCCH to cross-slot indicate the transmission beam of the PDSCH, so as to solve the problem of delay between a User Equipment (UE) acquiring the transmission beam of the PDSCH from the PDCCH and conducting PDSCH receiving using the beam information indicated by the PDCCH.

SUMMARY

In one embodiment, the inventor finds through research that cross-slot beam indication would result in reduction of dynamic of beam information, increase of overhead of control signaling, reduction of dynamic of scheduling, and other problems. A UE with high processing capacity can decode the PDCCH in a short time to obtain beam information that is used for receiving the PDSCH that is in the time slot of the PDCCH, and adjust a receiving beam to receive a multicarrier symbol in which the PDSCH is located. However, the delay in PDSCH transmission caused by decoding PDCCH would result in underutilization of system resources.

In view of the above problems, the present disclosure provides a solution. It should be noted that the embodiments of the present disclosure and the characteristics in the embodiments may be mutually combined if there is no conflict. For example, the embodiments of the base station of the present disclosure and the characteristics in the embodiments may be applied to the UE, and vice versa.

The present disclosure discloses a method in a UE used for wireless communication. The method includes the following steps:

receiving a first radio signal.

Herein, the first radio signal is transmitted within a first time unit, a first bit block is used for generating the first radio signal, and the first radio signal includes G multicarrier symbols. As for any one given multicarrier symbol of the G multicarrier symbols, the multi-antenna related receiving for the given multicarrier symbol is related to the relative position of a time-domain resource occupied by the given multicarrier symbol with respect to a first time point in time domain. The first time point is one time point within the first time unit. G is a positive integer.

In one embodiment, the above method is advantageous in that the multi-antenna related receiving for the first radio signal is configured flexibly according to the delay requirements of multi-antenna related receiving.

In one embodiment, the first radio signal is a PDSCH.

In one embodiment, the first radio signal is a consecutive data transmission block in time domain.

In one embodiment, the first radio signal is G consecutive multicarrier symbols in time domain.

In one embodiment, the first time unit is a subframe.

In one embodiment, the subframe includes 14 Orthogonal Frequency Division Multiplexing (OFDM) symbols.

In one embodiment, the first time unit is a time slot.

In one embodiment, the time slot includes 7 OFDM symbols.

In one embodiment, the first time unit is a Transmission Time Interval (TTI).

In one embodiment, the first time unit only includes a Downlink Control Information (DCI) that is used for indicating downlink assignment.

In one embodiment, all bits in the first bit block are used for generating the first radio signal.

In one embodiment, partial bits in the first bit block are used for generating the first radio signal.

In one embodiment, the first bit block is a transmission block.

In one embodiment, the first bit block is subjected to steps of Circular Redundancy Check (CRC) addition, segmentation, channel coding, rate matching, scrambling, modulation, antenna mapping to form the first radio signal.

In one embodiment, the first bit block is a subblock in a transmission block.

In one embodiment, the first bit block is one of the multiple bit subblocks that are formed after one transmission block is added with CRC and is segmented.

In one embodiment, the first bit block is subjected to steps of channel coding, rate matching, scrambling, modulation and antenna mapping to form the first radio signal.

In one embodiment, multiple bit blocks are one-to-one corresponding to multiple layers of signals in the first radio signal, and the first bit block is one of the multiple bit blocks.

In one embodiment, the multicarrier symbol is an OFDM symbol.

In one embodiment, the multicarrier symbol is a Filter Bank Multiple Carrier (FBMC) symbol.

In one embodiment, the multi-antenna related receiving refers to an analog receiving beam.

In one embodiment, the multi-antenna related receiving refers to a transmitting antenna port assumed by the UE.

In one embodiment, the G multicarrier symbols are G consecutive multicarrier symbols.

In one embodiment, the first radio signal consists of G multicarrier symbols.

In one embodiment, the first radio signal includes a multicarrier symbol not in the G multicarrier symbols.

In one embodiment, if the given multicarrier symbol is before the first time point in time domain, a first multi-antenna receiving mode is employed for the multi-antenna related receiving of the given multicarrier symbol; if the given multicarrier symbol is behind the first time point in time domain, a second multi-antenna receiving mode is employed for the multi-antenna related receiving of the given multicarrier symbol. The first multi-antenna receiving mode differs from the second multi-antenna receiving mode.

In one embodiment, the first multi-antenna receiving mode and the second multi-antenna receiving mode use different analog beams to receive, respectively.

In one embodiment, the first multi-antenna receiving mode and the second multi-antenna receiving mode assume different transmitting antenna ports to transmit, respectively.

In one embodiment, the antenna receiving gain corresponding to the second multi-antenna receiving mode is greater than the antenna receiving gain corresponding to the first multi-antenna receiving mode.

In one embodiment, the transmission reliability corresponding to the first multi-antenna receiving mode is greater than the transmission reliability corresponding to the second multi-antenna receiving mode.

In one embodiment, the second multi-antenna receiving mode uses a beam narrower than that of the first multi-antenna receiving mode.

In one embodiment, the G multicarrier symbols are all before the first time point in time domain, and the multi-antenna related receiving for the G multicarrier symbols is the same.

In one embodiment, the G multicarrier symbols are all behind the first time point in time domain, and the multi-antenna related receiving for the G multicarrier symbols is the same.

In one embodiment, G**1** multicarrier symbols of the G multicarrier symbols are before the first time point in time domain, G**2** multicarrier symbols of the G multicarrier symbols are behind the first time point in time domain, the multi-antenna related receiving for the G**1** multicarrier symbols is the same, the multi-antenna related receiving for the G**2** multicarrier symbols is the same, the multi-antenna related receiving for the G**1** multicarrier symbols and the multi-antenna related receiving for the G**2** multicarrier symbols are different. G**1** and G**2** are positive integers.

In one embodiment, the first time point is an index value of one multicarrier symbol within the first time unit.

According to one aspect of the present disclosure, the method includes the following steps:

receiving a second radio signal.

The second radio signal is transmitted within the first time unit, and the second radio signal is used for determining a time-domain resource occupied by the G multicarrier symbols.

In one embodiment, the above method is advantageous in that the time-domain resource occupied by the G multicarrier symbols is configured flexibly.

In one embodiment, the second radio signal is a PDCCH.

In one embodiment, the second radio signal is an Enhanced PDCCH (ePDCCH).

In one embodiment, the second radio signal indicates explicitly the time-domain resource occupied by the G multicarrier symbols

In one embodiment, the second radio signal indicates implicitly the time-domain resource occupied by the G multicarrier symbols

In one embodiment, the second radio signal is a DCI carrying downlink assignment.

In one embodiment, the first time unit is composed of N**1** multicarrier symbols in which the second radio signal is located and N**2** multicarrier symbols. N**2** is not smaller than G. The second radio signal is used for determining the G multicarrier symbols of the N multicarrier symbols. N**1** and N**2** are positive integers.

In one embodiment, the first time unit is composed of N**1** multicarrier symbols in which the second radio signal is located and G multicarrier symbols. The N**1** multicarrier symbols are used for determining the G multicarrier symbols. N**1** is a positive integer.

According to one aspect of the present disclosure, if the time-domain resource occupied by the given multicarrier symbol is behind the first time point, the second radio signal is used for determining the multi-antenna related receiving for the given multicarrier symbol; or, if the time-domain resource occupied by the given multicarrier symbol is before the first time point, the multi-antenna related receiving for the given multicarrier symbol is related to the multi-antenna related receiving for the second radio signal.

In one embodiment, the above method is advantageous in that the dynamic of the multi-antenna related receiving is increased.

In one embodiment, the above method is advantageous in that the delay in the receiving of the first radio signal resulted from the delay in the decoding of the second radio signal is avoided.

In one embodiment, the above method is advantageous in that, before the first time point, the PDSCH receives the multicarrier symbol of the PDSCH before the first time point using the same beam used for receiving the PDCCH, thereby avoiding the problem of the delay in PDSCH transmission resulted from the delay in PDCCH decoding.

In one embodiment, if the time-domain resource occupied by the given multicarrier symbol is behind the first time point, the second radio signal is used for determining the multi-antenna related receiving for the given multicarrier symbol; or, if the time-domain resource occupied by the given multicarrier symbol is before the first time point, the multi-antenna related receiving for the given multicarrier symbol is related to the multi-antenna related receiving for the second radio signal.

In one embodiment, the second radio signal indicates explicitly the multi-antenna related receiving for the given multicarrier symbol.

In one embodiment, the second radio signal indicates implicitly the multi-antenna related receiving for the given multicarrier symbol.

In one embodiment, the receiving beam for the given multicarrier symbol is the same as the receiving beam for the second radio signal.

In one embodiment, the assumed transmitting antenna port for the given multicarrier symbol is the same as the assumed transmitting antenna port for the second radio signal.

According to one aspect of the present disclosure, the multi-antenna related receiving refers to a corresponding beamforming vector used for receiving; or, the multi-antenna related receiving refers to a corresponding antenna port used for transmitting.

In one embodiment, the above method is advantageous in that the beam used for transmitting data is adjusted flexibly to improve the antenna array gain.

In one embodiment, the index value of the receiving beam is used for indicating the beamforming vector used for receiving.

In one embodiment, the index value of a first beam pair is used for indicating the beamforming vector used for receiving, and the first beam consists of a transmitting vector and a receiving vector.

In one embodiment, the beamforming vector is an analog beamforming vector.

In one embodiment, the beamforming vector is one beamforming vector consisting of an analog beamforming vector and a digital beamforming vector.

In one embodiment, the antenna port is formed by multiple physical antennas through antenna virtualization overlay. Mapping coefficients of the antenna port to the multiple physical antennas compose a beamforming vector, which is used for the antenna virtualization to form a beam.

In one embodiment, a first reference signal is transmitted through the antenna port used for transmitting, a small-scale channel parameter experienced by the first reference signal is used for determining the small-scale channel parameter experienced by the first radio signal, the first reference signal is indicated associated with a second reference signal, a big-scale channel parameter experienced by the second reference signal is used for determining the big-scale channel parameter experienced by the first radio signal.

In one subembodiment, the first reference signal is indicated Quasi Co-Located (QCL) with the second reference signal.

According to one aspect of the present disclosure, the method includes the following steps:

receiving first information.

The first information is used for determining the first time point.

In one embodiment, the above method is advantageous in that the first time point is configured flexibly according to the UE capability and system situations.

In one embodiment, the first information indicates explicitly the first time point.

In one embodiment, the first information indicates implicitly the first time point.

In one embodiment, the first time point is an index of one multicarrier symbol in the first time unit.

In one embodiment, the first information is a high-layer signaling.

In one embodiment, the first information is a Radio Resource Control (RRC) signaling.

According to one aspect of the present disclosure, the method includes the following steps:

transmitting second information.

The second information is used for determining the first time point.

In one embodiment, the above method is advantageous in that the UE can assist the base station to determine the first time point by indicating the processing capability of the UE to the base station, thereby optimizing the performance of the system.

In one embodiment, the second information indicates explicitly the first time point.

In one embodiment, the second information indicates implicitly the first time point.

In one embodiment, the second information is an RRC signaling.

In one embodiment, the second information is transmitted in a Message 3 in the random access process.

According to one aspect of the present disclosure, the method includes the following steps:

receiving third information.

The third information is used for determining a candidate scheme for the multi-antenna related receiving corresponding to the G multicarrier symbols.

In one embodiment, the above method is advantageous in that the candidate scheme for the multi-antenna related receiving corresponding to the G multicarrier symbols is configured flexibly.

In one embodiment, the third information indicates explicitly the candidate scheme for the multi-antenna related receiving corresponding to the G multicarrier symbols.

In one embodiment, the third information indicates implicitly the candidate scheme for the multi-antenna related receiving corresponding to the G multicarrier symbols.

In one embodiment, the candidate scheme for the multi-antenna related receiving corresponding to the G multicarrier symbols includes a first multi-antenna receiving mode and a second multi-antenna receiving mode. The first multi-antenna receiving mode differs from the second multi-antenna receiving mode. If the given multicarrier symbol is before the first time point in time domain, the first multi-antenna receiving mode is employed for the multi-antenna related receiving of the given multicarrier symbol; if the given multicarrier symbol is behind the first time point in time domain, the second multi-antenna receiving mode is employed for the multi-antenna related receiving of the given multicarrier symbol.

In one embodiment, the candidate scheme for the multi-antenna related receiving corresponding to the G multicarrier symbols includes multiple candidate beams used for receiving.

In one embodiment, the candidate scheme for the multi-antenna related receiving corresponding to the G multicarrier symbols includes multiple candidate beamforming vectors used for receiving.

In one embodiment, the third information is a DCI.

In one embodiment, the third information is transmitted on the PDCCH.

In one embodiment, the third information is carried in the second radio signal.

In one embodiment, one of the candidate scheme for the multi-antenna related receiving corresponding to the G multicarrier symbols is carried by the second radio signal.

In one embodiment, the third information is a high-layer signaling.

In one embodiment, the third information is an RRC signaling.

In one embodiment, the third information is used for determining the multi-antenna related receiving corresponding to the second radio signal.

In one embodiment, the third information indicates explicitly the multi-antenna related receiving corresponding to the second radio signal.

In one embodiment, the third information indicates implicitly the multi-antenna related receiving corresponding to the second radio signal.

The present disclosure discloses a method in a base station device used for wireless communication. The method includes the following steps:

transmitting a first radio signal.

Herein, the first radio signal is transmitted within a first time unit, a first bit block is used for generating the first radio signal, and the first radio signal includes G multicarrier symbols. As for any one given multicarrier symbol of the G multicarrier symbols, the multi-antenna related receiving for

the given multicarrier symbol is related to the relative position of a time-domain resource occupied by the given multicarrier symbol with respect to a first time point in time domain. The first time point is one time point within the first time unit. G is a positive integer.

According to one aspect of the present disclosure, the method includes the following steps:

transmitting a second radio signal.

The second radio signal is transmitted within the first time unit, and the second radio signal is used for determining a time-domain resource occupied by the G multicarrier symbols.

According to one aspect of the present disclosure, if the time-domain resource occupied by the given multicarrier symbol is behind the first time point, the second radio signal is used for determining the multi-antenna related receiving for the given multicarrier symbol; or, if the time-domain resource occupied by the given multicarrier symbol is before the first time point, the multi-antenna related receiving for the given multicarrier symbol is related to the multi-antenna related receiving for the second radio signal.

According to one aspect of the present disclosure, the multi-antenna related receiving refers to a corresponding beamforming vector used for receiving; or, the multi-antenna related receiving refers to a corresponding antenna port used for transmitting.

According to one aspect of the present disclosure, the method includes the following steps:

transmitting first information.

The first information is used for determining the first time point.

According to one aspect of the present disclosure, the method includes the following steps:

receiving second information.

The second information is used for determining the first time point.

According to one aspect of the present disclosure, the method includes the following steps:

transmitting third information.

The third information is used for determining a candidate scheme for the multi-antenna related receiving corresponding to the G multicarrier symbols.

The present disclosure discloses a UE used for wireless communication. The UE includes:

a first transceiver module, to receive a first radio signal.

Herein, the first radio signal is transmitted within a first time unit, a first bit block is used for generating the first radio signal, and the first radio signal includes G multicarrier symbols. As for any one given multicarrier symbol of the G multicarrier symbols, the multi-antenna related receiving for the given multicarrier symbol is related to the relative position of a time-domain resource occupied by the given multicarrier symbol with respect to a first time point in time domain. The first time point is one time point within the first time unit. G is a positive integer.

In one embodiment, the above UE is characterized in that the first transceiver module is further configured to receive a second radio signal, the second radio signal is transmitted within the first time unit, and the second radio signal is used for determining a time-domain resource occupied by the G multicarrier symbols.

In one embodiment, the above UE is characterized in that if the time-domain resource occupied by the given multicarrier symbol is behind the first time point, the second radio signal is used for determining the multi-antenna related receiving for the given multicarrier symbol; or, if the time-domain resource occupied by the given multicarrier symbol is before the first time point, the multi-antenna related receiving for the given multicarrier symbol is related to the multi-antenna related receiving for the second radio signal.

In one embodiment, the above UE is characterized in that the multi-antenna related receiving refers to a corresponding beamforming vector used for receiving; or, the multi-antenna related receiving refers to a corresponding antenna port used for transmitting.

In one embodiment, the above UE is characterized in that the first transceiver module is further configured to receive first information, the first information being used for determining the first time point.

In one embodiment, the above UE is characterized in that the first transceiver module is further configured to transmit second information, the second information being used for determining the first time point.

In one embodiment, the above UE is characterized in that the first transceiver module is further configured to receive third information, the third information being used for determining a candidate scheme for the multi-antenna related receiving corresponding to the G multicarrier symbols.

The present disclosure discloses a base station device used for wireless communication. The base station device includes:

a second transceiver module, to transmit a first radio signal.

Herein, the first radio signal is transmitted within a first time unit, a first bit block is used for generating the first radio signal, and the first radio signal includes G multicarrier symbols. As for any one given multicarrier symbol of the G multicarrier symbols, the multi-antenna related receiving for the given multicarrier symbol is related to the relative position of a time-domain resource occupied by the given multicarrier symbol with respect to a first time point in time domain. The first time point is one time point within the first time unit. G is a positive integer.

In one embodiment, the above base station device is characterized in that the second transceiver module is further configured to transmit a second radio signal, the second radio signal is transmitted within the first time unit, and the second radio signal is used for determining a time-domain resource occupied by the G multicarrier symbols.

In one embodiment, the above base station device is characterized in that if the time-domain resource occupied by the given multicarrier symbol is behind the first time point, the second radio signal is used for determining the multi-antenna related receiving for the given multicarrier symbol; or, if the time-domain resource occupied by the given multicarrier symbol is before the first time point, the multi-antenna related receiving for the given multicarrier symbol is related to the multi-antenna related receiving for the second radio signal.

In one embodiment, the above base station device is characterized in that the multi-antenna related receiving refers to a corresponding beamforming vector used for receiving; or, the multi-antenna related receiving refers to a corresponding antenna port used for transmitting.

In one embodiment, the above base station device is characterized in that the second transceiver module is further configured to transmit first information, the first information being used for determining the first time point.

In one embodiment, the above base station device is characterized in that the second transceiver module is further configured to receive second information, the second information being used for determining the first time point.

In one embodiment, the above base station device is characterized in that the second transceiver module is further configured to transmit third information, the third information being used for determining a candidate scheme for the multi-antenna related receiving corresponding to the G multicarrier symbols.

In one embodiment, compared with traditional schemes, the present disclosure has the following advantages:

the dynamic of the multi-antenna related receiving is increased;

the overhead of control signaling is saved;

the dynamic of scheduling is increased; and

the gain of transmission is improved.

BRIEF DESCRIPTION OF THE DRAWINGS

Other features, purposes and advantages of the present disclosure will become more apparent from the detailed description of non-restrictive embodiments taken in conjunction with the following drawings.

FIG. **1** is a flowchart illustrating a first radio signal according to one embodiment of the present disclosure.

FIG. **2** is a diagram illustrating a network architecture according to one embodiment of the present disclosure.

FIG. **3** is a diagram illustrating an embodiment of a radio protocol architecture of a user plane and a control plane according to one embodiment of the present disclosure.

FIG. **4** is a diagram illustrating an evolved node B and a UE according to one embodiment of the present disclosure.

FIG. **5** is a flowchart illustrating wireless transmission according to one embodiment of the present disclosure.

FIG. **6** is a diagram illustrating a first radio signal according to one embodiment of the present disclosure.

FIG. **7** is a diagram illustrating a second radio signal and a first radio signal according to one embodiment of the present disclosure.

FIG. **8** is a diagram illustrating first information and second information according to one embodiment of the present disclosure.

FIG. **9** is a structure block diagram illustrating a processing device used in a UE according to one embodiment of the present disclosure.

FIG. **10** is a structure block diagram illustrating a processing device used in a base station according to one embodiment of the present disclosure.

DESCRIPTION OF THE EMBODIMENTS

Embodiment 1

Embodiment 1 illustrates an example of a flowchart of a first radio signal, as shown in FIG. **1**.

In Embodiment 1, the UE in the present disclosure receives a first radio signal; the first radio signal is transmitted within a first time unit, a first bit block is used for generating the first radio signal, and the first radio signal includes G multicarrier symbols. As for any one given multicarrier symbol of the G multicarrier symbols, the multi-antenna related receiving for the given multicarrier symbol is related to the relative position of a time-domain resource occupied by the given multicarrier symbol with respect to a first time point in time domain. The first time point is one time point within the first time unit. G is a positive integer.

In one embodiment, the UE receives a second radio signal; the second radio signal is transmitted within the first time unit, and the second radio signal is used for determining a time-domain resource occupied by the G multicarrier symbols.

In one embodiment, if the time-domain resource occupied by the given multicarrier symbol is behind the first time point, the second radio signal is used for determining the multi-antenna related receiving for the given multicarrier symbol; or, if the time-domain resource occupied by the given multicarrier symbol is before the first time point, the multi-antenna related receiving for the given multicarrier symbol is related to the multi-antenna related receiving for the second radio signal.

In one embodiment, the UE receives first information, and the first information is used for determining the first time point.

In one embodiment, the UE transmits second information, and the second information is used for determining the first time point.

In one embodiment, the UE receives third information, and the third information is used for determining a candidate scheme for the multi-antenna related receiving corresponding to the G multicarrier symbols.

Embodiment 2

Embodiment 2 illustrates an example of a diagram for a network architecture, as shown in FIG. **2**.

Embodiment 2 illustrates an example of a diagram for a network architecture according to the present disclosure, as shown in FIG. **2**. FIG. **2** is a diagram illustrating a system network architecture **200** of NR 5G, LTE and Long-Term Evolution Advanced (LTE-A). The NR 5G or LTE network architecture **200** may be called an Evolved Packet System (EPS) **200** or other appropriate terms. The EPS **200** may include one or more UEs **201**, a Next Generation-Radio Access Network (NG-RAN) **202**, a 5G-Core Network/Evolved Packet Core (5G-CN/EPC) **210**, a Home Subscriber Server (HSS) **220** and an Internet Service **230**. The EPS may be interconnected with other access networks. For simple description, the entities/interfaces are not shown. As shown in FIG. **2**, the EPS provides packet switching services. Those skilled in the art are easy to understand that various concepts presented throughout the present disclosure can be extended to networks providing circuit switching services or other cellular networks. The NG-RAN includes an NR node B (gNB) **203** and other gNBs **204**. The gNB **203** provides UE **201** oriented user plane and control plane protocol terminations. The gNB **203** may be connected to other gNBs **204** via an Xn interface (for example, backhaul). The gNB **203** may be called a base station, a base transceiver station, a radio base station, a radio transceiver, a transceiver function, a Basic Service Set (BSS), an Extended Service Set (ESS), a TRP or other appropriate terms. The gNB **203** provides an access point of the 5G-CN/EPC **210** for the UE **201**. Examples of UE **201** include cellular phones, smart phones, Session Initiation Protocol (SIP) phones, laptop computers, Personal Digital Assistants (PDAs), Satellite Radios, non-ground base station communications, satellite mobile communications, Global Positioning Systems (GPSs), multimedia devices, video devices, digital audio player (for example, MP3 players), cameras, games consoles, unmanned aerial vehicles, air vehicles, narrow-band physical network equipment, machine-type communication equipment, land vehicles, automobiles, wearable equipment, or any other devices having similar functions. Those skilled in the art also can call the UE **201** a mobile station, a subscriber station, a mobile unit, a subscriber unit, a wireless unit, a

remote unit, a mobile device, a wireless device, a radio communication device, a remote device, a mobile subscriber station, an access terminal, a mobile terminal, a wireless terminal, a remote terminal, a handset, a user agent, a mobile client, a client or other appropriate terms. The gNB **203** is connected to the 5G-CN/EPC **210** via an S1/NG interface. The 5G-CN/EPC **210** includes a Mobility Management Entity/Authentication Management Field/User Plane Function (MME/AMF/UPF) **211**, other MMEs/AMFs/UPFs **214**, a Service Gateway (S-GW) **212** and a Packet Data Network Gateway (P-GW) **213**. The MME/AMF/UPF **211** is a control node for processing a signaling between the UE **201** and the 5G-CN/EPC **210**. Generally, the MME/AMF/UPF **211** provides bearer and connection management. All user Internet Protocol (IP) packets are transmitted through the S-GW **212**. The S-GW **212** itself is connected to the P-GW **213**. The P-GW **213** provides UE IP address allocation and other functions. The P-GW **213** is connected to the internet service **230**. The internet service **230** includes IP services corresponding to operators, specifically including internet, intranet, IP Multimedia Subsystems (IP IMSs) and PS Streaming Services (PSSs).

In one embodiment, the UE **201** corresponds to the UE in the present disclosure.

In one embodiment, the UE **201** corresponds to the terminal in the present disclosure.

In one embodiment, the gNB **203** corresponds to the base station in the present disclosure.

In one embodiment, the UE **201** supports conducting wireless communication of data transmission on an unauthorized spectrum.

In one embodiment, the gNB **203** supports conducting wireless communication of data transmission on an unauthorized spectrum.

In one embodiment, the UE **201** supports Non-Orthogonal Multiple Access (NOMA) based wireless communication.

In one embodiment, the gNB **203** supports Non-Orthogonal Multiple Access (NOMA) based wireless communication.

In one embodiment, the UE **201** supports Gran-Free uplink transmission.

In one embodiment, the gNB **203** supports Gran-Free uplink transmission.

In one embodiment, the UE **201** supports competition based uplink transmission.

In one embodiment, the gNB **203** supports competition based uplink transmission.

In one embodiment, the UE **201** supports beamforming based uplink transmission.

In one embodiment, the gNB **203** supports beamforming based uplink transmission.

In one embodiment, the UE **201** supports Massive-MIMO based uplink transmission.

In one embodiment, the gNB **203** supports Massive-MIMO based uplink transmission.

Embodiment 3

Embodiment 3 is a diagram illustrating an embodiment of a radio protocol architecture of a user plane and a control plane according to the present disclosure, as shown in FIG. **3**.

FIG. **3** is a diagram illustrating an embodiment of a radio protocol architecture of a user plane and a control plane. In FIG. **3**, the radio protocol architecture of a UE and a base station device (gNB or eNB) is presented by three layers, which are a layer 1, a layer 2 and a layer 3 respectively. The layer 1 (L1) **301** is the lowest layer and performs signal processing functions of each PHY layer. Layers above the layer 1 belong to higher layers. The layer 1 is called PHY **301** in this paper. The layer 2 (L2) **305** is above the PHY **301**, and is in charge of the link between the UE and the gNB via the PHY **301**. In the user plane, the L2 **305** includes a Medium Access Control (MAC) sublayer **302**, a Radio Link Control (RLC) sublayer **303**, and a Packet Data Convergence Protocol (PDCP) sublayer **304**. All the three sublayers end at the gNB of the network side. Although not described in FIG. **3**, the UE may include several higher layers above the L2 **305**, such as a network layer (i.e. IP layer) ending at a P-GW of the network side and an disclosure layer ending at the other side of the connection (i.e. a peer UE, a server, etc.). The PDCP sublayer **304** provides multiplexing among variable radio bearers and logical channels. The PDCP sublayer **304** also provides a header compression for a higher layer packet so as to reduce a radio transmission overhead. The PDCP sublayer **304** provides security by encrypting a packet and provides support for UE handover between gNBs. The RLC sublayer **303** provides segmentation and reassembling of a higher layer packet, retransmission of a lost packet, and reordering of a lost packet to as to compensate the disordered receiving caused by Hybrid Automatic Repeat Request (HARQ). The MAC sublayer **302** provides multiplexing between logical channels and transport channels. The MAC sublayer **302** is also responsible for allocating between UEs various radio resources (i.e., resource block) in a cell. The MAC sublayer **302** is also in charge of HARQ operation. In the control plane, the radio protocol architecture of the UE and the gNB is almost the same as the radio protocol architecture in the user plane on the PHY **301** and the L2 **305**, but there is no header compression for the control plane. The control plane also includes a Radio Resource Control (RRC) sublayer **306** in the layer 3 (L3). The RRC sublayer **306** is responsible for acquiring radio resources (i.e. radio bearer) and configuring the lower layers using a RRC signaling between the gNB and the UE.

In one embodiment, the radio protocol architecture shown in FIG. **3** is applicable to the UE in the present disclosure.

In one embodiment, the radio protocol architecture shown in FIG. **3** is applicable to the base station in the present disclosure.

In one embodiment, the first radio signal in the present disclosure is generated by the PDCP sublayer **304**.

In one embodiment, the second radio signal in the present disclosure is generated by the PHY **301**.

In one embodiment, the first information in the present disclosure is generated by the PDCP PHY **301**.

In one embodiment, the second information in the present disclosure is generated by the RRC sublayer **306**.

In one embodiment, the third information in the present disclosure is generated by the RRC sublayer **306**.

Embodiment 4

Embodiment 4 illustrates a diagram of a base station device and a UE according to the present disclosure, as shown in FIG. **4**. FIG. **4** is a block diagram of a gNB **410** in communication with a UE **450** in an access network.

The base station device **410** includes a controller/processor **440**, a memory **430**, a receiving processor **412**, a transmitting processor **415**, a transmitter/receiver **416** and an antenna **420**.

The UE **450** includes a controller/processor **490**, a memory **480**, a data source **467**, a transmitting processor **455**, a receiving processor **452**, a transmitter/receiver **456** and an antenna **460**.

In uplink transmission, processes relevant to the base station device **410** include the following.

The receiver **416** receives a radio-frequency signal through the corresponding antenna **420**, converts the received radio-frequency signal into a baseband signal, and provides the baseband signal to the receiving processor **412**.

The receiving processor **412** performs signal receiving processing functions of an L1 layer (that is, PHY), such as multi-antenna receiving, demodulation, descrambling, despreading, de-interleaving, channel decoding, extraction of physical layer control signal, etc.

The controller/processor **440** performs operations of an L2 layer, and is connected to the memory **43** that stores program code and data.

The controller/processor **440** provides multiplexing between a transport channel and a logical channel, packet reassembling, decryption, header decompression, and control signaling processing so as to recover a higher-layer packet coming from the UE **450**. The higher-layer packet from the controller/processor **440** is then provided to a core network.

The controller/processor **440** determines a target aerial resource probably occupied by a target uplink radio signal, and sends the result to the receiving processor **412**; and determines through blind detection whether the target uplink radio signal occupies the target aerial resource.

In UL transmission, processes relevant to the UE **450** include the following.

The data source **467** provides a higher-layer packet to the controller/processor **490**. The data source **467** expresses all protocol layers above the L2 layer.

The transmitter **456** transmits a radio-frequency signal through the corresponding antenna **460**, converts a baseband signal into a radio-frequency signal and provides the radio-frequency signal to the corresponding antenna **460**.

The transmitting processor **455** performs signal receiving processing functions of the L1 layer (that is, PHY), including encoding, scrambling, code division multiplexing, interleaving, modulation, multi-antenna transmitting, etc.

The controller/processor **490** performs header compression, encryption, packet segmentation and reordering, and multiplexing between a logical channel and a transport channel based on the radio resource allocation of the gNB **410**, and performs functions of the layer 2 of the user plane and the control plane.

The controller/processor **490** is also in charge of HARQ operation, retransmission of a lost packet, and the signaling to the eNB **410**.

The controller/processor **490** determines itself the radio resource occupied by the radio signal and sends the result to the transmitting processor **455**.

In Downlink (DL) transmission, processes relevant to the base station device **410** include the following.

A packet from a higher layer is provided to the controller/processor **440**. The controller/processor **440** provides header compression, encryption, packet segmentation and reordering, multiplexing and de-multiplexing between a logical channel and a transport channel, to implement the L2 protocol used for the user plane and the control plane. The packet from a higher layer may include data or control information, for example, Downlink Shared Channel (DL-SCH).

The controller/processor **440** is connected to a memory **430** that stores program code and data. The memory **430** is computer readable.

The controller/processor **440** includes a scheduling unit used for transmission requirements. The scheduling unit is configured to schedule aerial resources corresponding to transmission requirements.

The controller/processor **440** determines downlink signaling/data to be transmitted, and sends the result to the transmitting processor **415**.

The transmitting processor **415** receives a bit stream output from the controller/processor **440**, and performs signal transmitting processing functions of an L1 layer (that is, PHY), including encoding, interleaving, scrambling, modulation, precoding, power control/allocation, generation of physical layer control signaling (including PBCH, PDCCH, PHICH, PCFICH, reference signal), etc.

The transmitter **416** is configured to convert the baseband signal provided by the transmitting processor **415** into a radio-frequency signal and transmit the radio-frequency signal via the antenna **420**. Each transmitter **416** performs sampling processing on respective input symbol streams to obtain respective sampled signal streams. Each transmitter **416** performs further processing (for example, digital-to-analogue conversion, amplification, filtering, up conversion, etc.) on respective sampled streams to obtain a downlink signal.

In DL transmission, processes relevant to the UE **450** include the following.

The receiver **456** is configured to convert a radio-frequency signal received via the antenna **460** into a baseband signal and provide the baseband signal to the receiving processor **452**.

The receiving processor **452** performs signal receiving processing functions of an L1 layer (that is, PHY), including multi-antenna receiving, demodulation, descrambling, de-interleaving, decoding, extraction of physical layer control signaling, etc.

The controller/processor **490** receives a bit stream output from the receiving processor **452**, and provides header decompression, decryption, packet segmentation and reordering, multiplexing and de-multiplexing between a logical channel and a transport channel, to implement the L2 protocol used for the user plane and the control plane.

The controller/processor **490** is connected to a memory **480** that stores program code and data. The memory **480** is computer readable.

In one embodiment, the UE **450** device includes at least one processor and at least one memory. The at least one memory includes computer program codes. The at least one memory and the computer program codes are configured to be used in collaboration with the at least one processor. The UE **450** device at least receives a first radio signal, wherein the first radio signal is transmitted within a first time unit, a first bit block is used for generating the first radio signal, and the first radio signal includes G multicarrier symbols; as for any one given multicarrier symbol of the G multicarrier symbols, the multi-antenna related receiving for the given multicarrier symbol is related to the relative position of a time-domain resource occupied by the given multicarrier symbol with respect to a first time point in time domain; the first time point is one time point within the first time unit; and G is a positive integer.

In one embodiment, the UE **450** includes a memory that stores a computer readable instruction program. The computer readable instruction program generates an action when executed by at least one processor. The action includes

receiving a first radio signal, wherein the first radio signal is transmitted within a first time unit, a first bit block is used for generating the first radio signal, and the first radio signal includes G multicarrier symbols; as for any one given multicarrier symbol of the G multicarrier symbols, the multi-antenna related receiving for the given multicarrier symbol is related to the relative position of a time-domain resource occupied by the given multicarrier symbol with respect to a first time point in time domain; the first time point is one time point within the first time unit; and G is a positive integer.

In one embodiment, the gNB **410** device includes at least one processor and at least one memory. The at least one memory includes computer program codes. The at least one memory and the computer program codes are configured to be used in collaboration with the at least one processor. The gNB **410** device at least transmits a first radio signal, wherein the first radio signal is transmitted within a first time unit, a first bit block is used for generating the first radio signal, and the first radio signal includes G multicarrier symbols; as for any one given multicarrier symbol of the G multicarrier symbols, the multi-antenna related receiving for the given multicarrier symbol is related to the relative position of a time-domain resource occupied by the given multicarrier symbol with respect to a first time point in time domain; the first time point is one time point within the first time unit; and G is a positive integer.

In one embodiment, the gNB **410** includes a memory that stores a computer readable instruction program. The computer readable instruction program generates an action when executed by at least one processor. The action includes transmitting a first radio signal, wherein the first radio signal is transmitted within a first time unit, a first bit block is used for generating the first radio signal, and the first radio signal includes G multicarrier symbols; as for any one given multicarrier symbol of the G multicarrier symbols, the multi-antenna related receiving for the given multicarrier symbol is related to the relative position of a time-domain resource occupied by the given multicarrier symbol with respect to a first time point in time domain; the first time point is one time point within the first time unit; and G is a positive integer.

In one embodiment, the UE **450** corresponds to the UE in the present disclosure.

In one embodiment, the gNB **410** corresponds to the base station in the present disclosure.

In one embodiment, at least the former two of the antenna **460**, the receiver **456**, the receiving processor **452**, and the controller/processor **490** are configured to receive the first radio signal in the present disclosure.

In one embodiment, at least the former two of the antenna **460**, the receiver **456**, the receiving processor **452**, and the controller/processor **490** are configured to receive the second radio signal in the present disclosure.

In one embodiment, at least the former two of the antenna **460**, the receiver **456**, the receiving processor **452**, and the controller/processor **490** are configured to receive the first information in the present disclosure.

In one embodiment, at least the former two of the antenna **460**, the receiver **456**, the receiving processor **452**, and the controller/processor **490** are configured to transmit the second information in the present disclosure.

In one embodiment, at least the former two of the antenna **460**, the receiver **456**, the receiving processor **452**, and the controller/processor **490** are configured to receive the third information in the present disclosure.

In one subembodiment, at least the former two of the antenna **420**, the transmitter **416**, the transmitting processor **415**, and the controller/processor **440** are configured to transmit the first radio signal in the present disclosure.

In one subembodiment, at least the former two of the antenna **420**, the transmitter **416**, the transmitting processor **415**, and the controller/processor **440** are configured to transmit the second radio signal in the present disclosure.

In one subembodiment, at least the former two of the antenna **420**, the transmitter **416**, the transmitting processor **415**, and the controller/processor **440** are configured to transmit the first information in the present disclosure.

In one subembodiment, at least the former two of the antenna **420**, the transmitter **416**, the transmitting processor **415**, and the controller/processor **440** are configured to receive second first information in the present disclosure.

In one subembodiment, at least the former two of the antenna **420**, the transmitter **416**, the transmitting processor **415**, and the controller/processor **440** are configured to transmit the third information in the present disclosure.

Embodiment 5

Embodiment 5 illustrates an example of a flowchart of wireless transmission, as shown in FIG. **5**. In FIG. **5**, the base station N**1** is a maintenance base station for a serving cell of the UE U**2**. In FIG. **5**, steps in box F**1**, box F**2**, box F**3** and box F**4** are optional respectively.

The N**1** receives second information in S**11**, transmits first information in S**12**, transmits third information in S**13**, transmits a second radio signal in S**14**, and transmits a first radio signal in S**15**.

The U**2** transmits the second information in S**21**, receives the first information in S**22**, receives the third information in S**23**, receives the second radio signal in S**24**, and receives the first radio signal in S**25**.

In embodiment 5, the N**1** transmits the first radio signal in a first time unit, a first bit block is used by the N**1** to generate the first radio signal, and the first radio signal includes G multicarrier symbols. As for any one given multicarrier symbol of the G multicarrier symbols, the multi-antenna related receiving for the given multicarrier symbol by the U**2** is related to the relative position of a time-domain resource occupied by the given multicarrier symbol with respect to a first time point in time domain. The first time point is one time point within the first time unit. G is a positive integer.

In one subembodiment, the step in the box F**4** exists, the N**1** transmits the second radio signal in the first time unit, and the second radio signal is used by the U**2** to determine a time-domain resource occupied by the G multicarrier symbols.

In one subembodiment, if the time-domain resource occupied by the given multicarrier symbol is behind the first time point, the second radio signal is used by the U**2** to determine the multi-antenna related receiving for the given multicarrier symbol.

In one subembodiment, if the time-domain resource occupied by the given multicarrier symbol is before the first time point, the multi-antenna related receiving for the given multicarrier symbol by the U**2** is related to the multi-antenna related receiving for the second radio signal.

In one subembodiment, the multi-antenna related receiving refers to a beamforming vector used for receiving corresponding to the U**2**.

In one subembodiment, the multi-antenna related receiving refers to an antenna port used for transmitting corresponding to N**1**.

In one subembodiment, the step in the box F**2** exists, the first information is used by the U**2** to determine the first time point.

In one subembodiment, the step in the box F**1** exists, the second information is used by the N**1** to determine the first time point.

In one subembodiment, the step in the box F**3** exists, the third information is used by the U**2** to determine a candidate scheme for the multi-antenna related receiving corresponding to the G multicarrier symbols.

If there is no conflict, the above subembodiments can be arbitrarily combined.

Embodiment 6

Embodiment 6 illustrates an example of a first radio signal, as shown in FIG. **6**. In FIG. **6**, rectangles filled by oblique lines represent multicarrier symbols in the first radio signal before the first time point, rectangles filled by cross lines represent multicarrier symbols in the first radio signal behind the first time point, blank rectangles represent multicarrier symbols not in the first radio signal, a wide oval filled by oblique lines represents a first receiving beam, and a narrow oval filled by cross lines represents a second receiving beam.

In Embodiment 6, the first radio signal consists of G multicarrier symbols, the first time unit includes the G multicarrier symbols, the first time point is one time point within the first time unit, and the relative position of the first radio signal with respect to the first time point in time domain includes the three cases shown in FIG. **6**.

In the first case of Embodiment 6, the first time point is one time point in the time domain in which the G multicarrier symbols are located. The first receiving beam is used for receiving the multicarrier symbols in the first radio signal before the first time point. The second receiving beam is used for receiving the multicarrier symbols in the first radio signal behind the first time point.

In the second case of Embodiment 6, the first time point is behind the G multicarrier symbols, and the first receiving beam is used for receiving the G multicarrier symbols.

In the third case of Embodiment 6, the first time point is before the G multicarrier symbols, and the second receiving beam is used for receiving the G multicarrier symbols.

In one subembodiment, the time unit is a subframe.

In one subembodiment, the time unit is a time slot.

In one subembodiment, the second radio signal is a multicarrier symbol in which the PDSCH is located.

In one subembodiment, different beamforming vectors are used for forming the first receiving beam and the second receiving beam.

In one subembodiment, the first receiving beam has a beam width greater than that of the second receiving beam.

Embodiment 7

Embodiment 7 illustrates an example of a second radio signal and a first radio signal, as shown in FIG. **7**. Grey rectangles represent multicarrier symbols in the second radio signal, rectangles filled by oblique lines represent multicarrier symbols in the first radio signal before the first time point, rectangles filled by cross lines represent multicarrier symbols in the first radio signal behind the first time point, blank rectangles represent multicarrier symbols not in the first radio signal, a wide oval filled by oblique lines represents a first receiving beam, and a narrow oval filled by cross lines represents a second receiving beam.

In Embodiment 7, both the first radio signal and the second radio signal are transmitted within the first time unit, the multicarrier symbols occupied by the second radio signal are before the multicarrier symbols occupied by the first radio signal in time domain, the first receiving beam is used for receiving the second radio signal, the second radio signal indicates the start time point of the first radio signal in the first time unit, and the start time point is used for determining the time domain resource occupied by the first radio signal in the first time unit. The first time point is one time point within the first time unit behind the multicarrier symbols occupied by the second radio signal.

In Embodiment 7, the first receiving beam is used for receiving the second radio signal and the multicarrier symbols of the first radio signal before the first time point, and the second receiving beam is used for receiving the multicarrier symbols of the first radio signal behind the first time point.

In one subembodiment, the second radio signal is a PDCCH, and the first radio signal is a PDSCH.

In one subembodiment, the second radio signal is a DCI that is used for indicating downlink assignment, and the first radio signal is a PDSCH transmitted on the downlink resource indicated by the second radio signal.

In one subembodiment, the second radio signal indicates the second receiving beam.

In one subembodiment, the signaling before the first time unit is used for indicating the first receiving beam.

Embodiment 8

Embodiment 8 illustrates an example of first information and second information, as shown in FIG. **8**.

In Embodiment 8, the UE transmits to the base station the second information to recommend a candidate for the first time point, according to the processing capacity of the UE; and the base station transmits to the UE the first information to indicate the first time point, according to the processing capacity of the UE and the system situation. The first time point is one time point within the first time unit. The first time point is not earlier than the recommended candidate for the first time point in time domain. The first time point is used for determining the multi-antenna related receiving corresponding to the first radio signal in the first time unit. The first radio signal includes G multicarrier symbols. As for any one given multicarrier symbol of the G multicarrier symbols, the multi-antenna related receiving for the given multicarrier symbol is related to the relative position of the time-domain resource occupied by the given multicarrier symbol with respect to the first time point in time domain.

Embodiment 9

Embodiment 9 illustrates an example of a structure block diagram for a processing device used in a UE, as shown in FIG. **9**. The UE device **200** is mainly composed of a first transceiver module **201**.

In Embodiment 9, the first transceiver module **201** receives a first radio signal.

In embodiment 9, the first radio signal is transmitted within a first time unit, a first bit block is used for generating the first radio signal, and the first radio signal includes G multicarrier symbols. As for any one given multicarrier symbol of the G multicarrier symbols, the multi-antenna related receiving for the given multicarrier symbol is related to the relative position of a time-domain resource occupied by the given multicarrier symbol with respect to a first time

point in time domain. The first time point is one time point within the first time unit. G is a positive integer.

In one embodiment, the first transceiver module **201** includes the receiver **456** and the receiving processor **452** mentioned in Embodiment 4.

In one embodiment, the first transceiver module **201** includes the transmitter **456** and the transmitting processor **455** mentioned in Embodiment 4.

In one embodiment, the first transceiver module **201** includes the antenna **460** mentioned in Embodiment 4.

In one embodiment, the first transceiver module **201** includes the controller/processor **490** mentioned in Embodiment 4.

In one embodiment, the first transceiver module **201** is further configured to receive a second radio signal; and the second radio signal is transmitted within the first time unit, and the second radio signal is used for determining a time-domain resource occupied by the G multicarrier symbols.

In one embodiment, if the time-domain resource occupied by the given multicarrier symbol is behind the first time point, the second radio signal is used for determining the multi-antenna related receiving for the given multicarrier symbol.

In one embodiment, if the time-domain resource occupied by the given multicarrier symbol is before the first time point, the multi-antenna related receiving for the given multicarrier symbol is related to the multi-antenna related receiving for the second radio signal.

In one embodiment, the multi-antenna related receiving refers to a corresponding beamforming vector used for receiving.

In one embodiment, the multi-antenna related receiving refers to a corresponding antenna port used for transmitting.

In one embodiment, the first transceiver module **201** is further configured to receive first information; and the first information is used for determining the first time point.

In one embodiment, the first transceiver module **201** is further configured to transmit second information; and the second information is used for determining the first time point.

In one embodiment, the first transceiver module **201** is further configured to receive third information; and the third information is used for determining a candidate scheme for the multi-antenna related receiving corresponding to the G multicarrier symbols.

Embodiment 10

Embodiment 10 illustrates an example of a structure block diagram for a processing device used in a base station, as shown in FIG. **10**. The base station device **300** is mainly composed of a second transceiver module **301**.

In Embodiment 10, the second transceiver module **301** transmits a first radio signal.

In Embodiment 10, the first radio signal is transmitted within a first time unit, a first bit block is used for generating the first radio signal, and the first radio signal includes G multicarrier symbols. As for any one given multicarrier symbol of the G multicarrier symbols, the multi-antenna related receiving for the given multicarrier symbol is related to the relative position of a time-domain resource occupied by the given multicarrier symbol with respect to a first time point in time domain. The first time point is one time point within the first time unit. G is a positive integer.

In one embodiment, the second transceiver module **301** includes the transmitter **416** and the transmitting processor **415** mentioned in Embodiment 4.

In one embodiment, the second transceiver module **301** includes the receiver **416** and the receiving processor **412** mentioned in Embodiment 4.

In one embodiment, the second transceiver module **301** includes the receiver **416** and the transmitting processor **412** mentioned in Embodiment 4.

In one embodiment, the second transceiver module **301** includes the antenna **420** mentioned in Embodiment 4.

In one embodiment, the second transceiver module **301** is further configured to transmit a second radio signal; and the second radio signal is transmitted within the first time unit, and the second radio signal is used for determining a time-domain resource occupied by the G multicarrier symbols.

In one embodiment, if the time-domain resource occupied by the given multicarrier symbol is behind the first time point, the second radio signal is used for determining the multi-antenna related receiving for the given multicarrier symbol.

In one embodiment, if the time-domain resource occupied by the given multicarrier symbol is before the first time point, the multi-antenna related receiving for the given multicarrier symbol is related to the multi-antenna related receiving for the second radio signal.

In one embodiment, the multi-antenna related receiving refers to a corresponding beamforming vector used for receiving.

In one embodiment, the multi-antenna related receiving refers to a corresponding antenna port used for transmitting.

In one embodiment, the second transceiver module **301** is further configured to transmit first information, and the first information is used for determining the first time point.

In one embodiment, the second transceiver module **301** is further configured to receive second information, and the second information is used for determining the first time point.

In one embodiment, the second transceiver module **301** is further configured to transmit third information, and the third information is used for determining a candidate scheme for the multi-antenna related receiving corresponding to the G multicarrier symbols.

The ordinary skill in the art may understand that all or part steps in the above method may be implemented by instructing related hardware through a program. The program may be stored in a computer readable storage medium, for example Read-Only Memory (ROM), hard disk or compact disc, etc. Optionally, all or part steps in the above embodiments also may be implemented by one or more integrated circuits. Correspondingly, each module unit in the above embodiment may be realized in the form of hardware, or in the form of software function modules. The present disclosure is not limited to any combination of hardware and software in specific forms. The UE or terminal in the present disclosure include but not limited to mobile phones, tablet computers, notebooks, network cards, NB-IOT terminals, eMTC terminal and other wireless communication equipment. The base station or system in the present disclosure includes but not limited to macro-cellular base stations, micro-cellular base stations, home base stations, relay base station and other wireless communication equipment.

The above are merely the preferred embodiments of the present disclosure and are not intended to limit the scope of protection of the present disclosure. Any modification, equivalent substitute and improvement made within the

spirit and principle of the present disclosure are intended to be included within the scope of protection of the present disclosure.

What is claimed is:

1. A method in a User Equipment (UE) for wireless communication, comprising:

receiving a second radio signal;

receiving a first radio signal;

wherein the first radio signal is transmitted within a first time unit, a first bit block is used for generating the first radio signal, and the first radio signal comprises G multicarrier symbols; the second radio signal is transmitted within the first time unit, and the second radio signal is used for determining a time-domain resource occupied by the G multicarrier symbols; as for any one given multicarrier symbol of the G multicarrier symbols, the multi-antenna related receiving for the given multicarrier symbol is related to the relative position of a time-domain resource occupied by the given multicarrier symbol with respect to a first time point in time domain; when the time-domain resource occupied by the given multicarrier symbol is behind the first time point, the second radio signal is used for determining the multi-antenna related receiving for the given multicarrier symbol; and when the time-domain resource occupied by the given multicarrier symbol is before the first time point, the multi-antenna related receiving for the given multicarrier symbol is related to the multi-antenna related receiving for the second radio signal; the first time point is one time point within the first time unit; and G is a positive integer.

2. The method according to claim **1**, comprising:

receiving first information, wherein the first information is used for determining the first time point;

or,

receiving third information, wherein the third information is used for determining a candidate scheme for the multi-antenna related receiving corresponding to the G multicarrier symbols.

3. The method according to claim **2** comprising:

transmitting second information, wherein the second information is used for determining the first time point.

4. The method according to claim **1** comprising:

transmitting second information;

wherein the second information is used for determining the first time point.

5. A method in a base station device for wireless communication, comprising:

transmitting a second radio signal;

transmitting a first radio signal;

wherein the first radio signal is transmitted within a first time unit, a first bit block is used for generating the first radio signal, and the first radio signal comprises G multicarrier symbols; the second radio signal is transmitted within the first time unit, and the second radio signal is used for determining a time-domain resource occupied by the G multicarrier symbols; as for any one given multicarrier symbol of the G multicarrier symbols, the multi-antenna related receiving for the given multicarrier symbol is related to the relative position of a time-domain resource occupied by the given multicarrier symbol with respect to a first time point in time domain; when the time-domain resource occupied by the given multicarrier symbol is behind the first time point, the second radio signal is used to determine the multi-antenna related receiving for the given multicarrier symbol; and when the time-domain resource occupied by the given multicarrier symbol is before the first time point, the multi-antenna related receiving for the given multicarrier symbol is related to the multi-antenna related receiving for the second radio signal; the first time point is one time point within the first time unit; and G is a positive integer.

6. The method according to claim **5**, comprising:

transmitting first information, wherein the first information is used for determining the first time point;

or,

transmitting third information, wherein the third information is used for determining a candidate scheme for the multi-antenna related receiving corresponding to the G multicarrier symbols.

7. The method according to claim **6** comprising:

receiving second information, wherein the second information is used for determining the first time point.

8. The method according to claim **5**, comprising:

receiving second information;

wherein the second information is used for determining the first time point.

9. A UE for wireless communication, comprising:

a first transceiver module, to receive a second radio signal and a first radio signal;

wherein the first radio signal is transmitted within a first time unit, a first bit block is used for generating the first radio signal, and the first radio signal comprises G multicarrier symbols; the second radio signal is transmitted within the first time unit, and the second radio signal is used for determining a time-domain resource occupied by the G multicarrier symbols; as for any one given multicarrier symbol of the G multicarrier symbols, the multi-antenna related receiving for the given multicarrier symbol is related to the relative position of a time-domain resource occupied by the given multicarrier symbol with respect to a first time point in time domain; when the time-domain resource occupied by the given multicarrier symbol is behind the first time point, the second radio signal is used to determine the multi-antenna related receiving for the given multicarrier symbol; and when the time-domain resource occupied by the given multicarrier symbol is before the first time point, the multi-antenna related receiving for the given multicarrier symbol is related to the multi-antenna related receiving for the second radio signal; the first time point is one time point within the first time unit; and G is a positive integer.

10. The UE according to claim **9**, wherein the first transceiver module receives first information, the first information being used for determining the first time point; or, the first transceiver module transmits second information, the second information being used for determining the first time point; or, the first transceiver module receives third information, the third information being used for determining a candidate scheme for the multi-antenna related receiving corresponding to the G multicarrier symbols.

11. A base station device for wireless communication, comprising:

a second transceiver module, to transmit a second radio signal and a first radio signal;

wherein the first radio signal is transmitted within a first time unit, a first bit block is used for generating the first radio signal, and the first radio signal comprises G multicarrier symbols; the second radio signal is transmitted within the first time unit, and the second radio signal is used for determining a time-domain resource occupied by the G multicarrier symbols; as for any one

given multicarrier symbol of the G multicarrier symbols, the multi-antenna related receiving for the given multicarrier symbol is related to the relative position of a time-domain resource occupied by the given multicarrier symbol with respect to a first time point in time domain; when the time-domain resource occupied by the given multicarrier symbol is behind the first time point, the second radio signal is used to determine the multi-antenna related receiving for the given multicarrier symbol; and when the time-domain resource occupied by the given multicarrier symbol is before the first time point, the multi-antenna related receiving for the given multicarrier symbol is related to the multi-antenna related receiving for the second radio signal; the first time point is one time point within the first time unit; and G is a positive integer.

12. The base station device according to claim **11**, wherein the second transceiver module transmits first information, the first information being used for determining the first time point; or, the second transceiver module receives second information, the second information being used for determining the first time point; or, the second transceiver module transmits third information, the third information being used for determinna related receiving corresponding to the G multicarrier symbols.

* * * * *