US011431386B1

(12) **United States Patent**
Shattil

(10) **Patent No.: US 11,431,386 B1**
(45) **Date of Patent: Aug. 30, 2022**

(54) **TRANSMIT PRE-CODING**

(71) Applicant: **Genghiscomm Holdings, LLC**, Boulder, CO (US)

(72) Inventor: **Steve Shattil**, Cheyenne, WY (US)

(73) Assignee: **Genghiscomm Holdings, LLC**, Boulder, CO (US)

(*) Notice: Subject to any disclaimer, the term of this patent is extended or adjusted under 35 U.S.C. 154(b) by 148 days.

(21) Appl. No.: **17/105,576**

(22) Filed: **Nov. 26, 2020**

Related U.S. Application Data

(60) Division of application No. 14/727,769, filed on Jun. 1, 2015, now Pat. No. 11,201,644, which is a
(Continued)

(51) **Int. Cl.**
H04B 7/0452 (2017.01)
H04B 7/026 (2017.01)
(Continued)

(52) **U.S. Cl.**
CPC ***H04B 7/0452*** (2013.01); ***H04B 1/0003*** (2013.01); ***H04B 7/024*** (2013.01);
(Continued)

(58) **Field of Classification Search**
CPC ... H04B 7/0452; H04B 7/0456; H04L 5/0007; H04L 5/0023; H04L 5/0035;
(Continued)

(56) **References Cited**

U.S. PATENT DOCUMENTS

4,164,714 A 8/1979 Swanson
4,471,399 A 9/1984 Udren
(Continued)

FOREIGN PATENT DOCUMENTS

EP 2449690 B1 1/2006
EP 2763321 A1 8/2014
(Continued)

OTHER PUBLICATIONS

H. Prakash, C.D.Suriyakala; "Papr Reduction in MIMO SC-FDMA—A Survey"; Int. J Rec. Adv. Sci. Tech., 2015; 2(2):11-19.
(Continued)

Primary Examiner — Samina F Choudhry
(74) *Attorney, Agent, or Firm* — Steven J Shattil

(57) **ABSTRACT**

A method for receiving an Orthogonal Frequency Division Multiplexing (OFDM) signal transmitted by a user device in a wireless network comprises determining which subcarrier frequencies are allocated to the user device; converting the OFDM signal to a frequency-domain values corresponding to the subcarrier frequencies; and decoding the frequency-domain values to recover data symbols encoded by the user device on the subcarrier frequencies. The decoding employs codes that are inverse to, complex-conjugate of, or complementary to a set of complex-valued codes employed by the user device to shape the OFDM signal into a superposition of cyclic-shifted pulse waveforms, wherein each of the pulse waveforms has one of the data symbols modulated thereon.

27 Claims, 32 Drawing Sheets

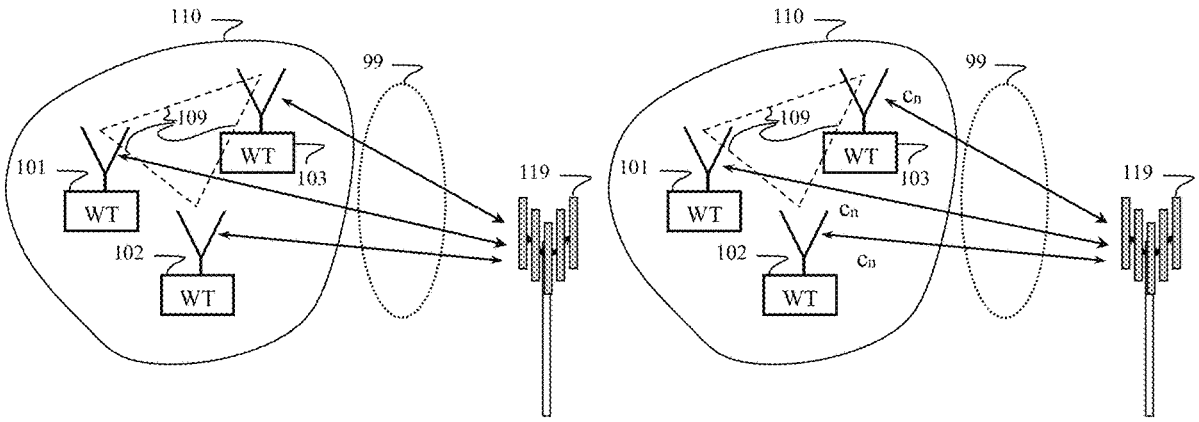

Related U.S. Application Data

continuation of application No. 14/276,309, filed on May 13, 2014, now Pat. No. 9,048,897, which is a continuation of application No. 12/545,572, filed on Aug. 21, 2009, now Pat. No. 8,750,264, which is a division of application No. 11/187,107, filed on Jul. 22, 2005, now Pat. No. 8,670,390.

(60) Provisional application No. 60/598,187, filed on Aug. 2, 2004.

(51) **Int. Cl.**

H04J 13/00	(2011.01)
H04L 27/26	(2006.01)
H04L 45/24	(2022.01)
H04L 47/10	(2022.01)
H04L 5/00	(2006.01)
H04B 7/0456	(2017.01)
H04B 7/024	(2017.01)
H04B 7/06	(2006.01)
H04L 27/01	(2006.01)
H04L 27/148	(2006.01)
H04B 1/00	(2006.01)
H04W 84/18	(2009.01)
H04J 13/12	(2011.01)
H04W 72/04	(2009.01)

(52) **U.S. Cl.**

CPC ***H04B 7/026*** (2013.01); ***H04B 7/0456*** (2013.01); ***H04B 7/0697*** (2013.01); ***H04J 13/0003*** (2013.01); ***H04J 13/004*** (2013.01); ***H04L 5/0007*** (2013.01); ***H04L 5/0023*** (2013.01); ***H04L 5/0035*** (2013.01); ***H04L 5/0037*** (2013.01); ***H04L 5/0073*** (2013.01); ***H04L 27/01*** (2013.01); ***H04L 27/148*** (2013.01); ***H04L 27/2602*** (2013.01); ***H04L 27/265*** (2013.01); ***H04L 27/2636*** (2013.01); ***H04L 27/2646*** (2013.01); ***H04L 27/2647*** (2013.01); ***H04L 45/24*** (2013.01); ***H04L 47/10*** (2013.01); *H04J 13/12* (2013.01); *H04L 5/0021* (2013.01); *H04L 27/2601* (2013.01); *H04L 27/2614* (2013.01); *H04W 72/046* (2013.01); *H04W 84/18* (2013.01)

(58) **Field of Classification Search**

CPC H04L 5/0037; H04L 27/2602; H04W 72/046; H04W 84/18

See application file for complete search history.

(56) **References Cited**

U.S. PATENT DOCUMENTS

4,479,226	A	10/1984	Prabhu et al.
4,550,402	A	10/1985	Gable et al.
4,590,511	A	5/1986	Bocchi et al.
4,628,517	A	12/1986	Schwarz
4,700,341	A	10/1987	Huang
4,827,480	A	5/1989	Kowalski
4,901,307	A	2/1990	Gilhousen et al.
4,912,422	A	3/1990	Kobayashi et al.
4,943,973	A	7/1990	Werner
5,003,545	A	3/1991	Kowalski
5,016,242	A	5/1991	Tang
5,093,863	A	3/1992	Galand et al.
5,125,100	A	6/1992	Katznelson
5,191,459	A	3/1993	Thompson et al.
5,249,201	A	9/1993	Posner et al.
5,282,222	A	1/1994	Fattouche et al.
5,309,514	A	5/1994	Johnson et al.
5,406,551	A	4/1995	Saito et al.
5,410,538	A	4/1995	Roche et al.
5,412,648	A	5/1995	Fan
5,422,952	A	6/1995	Kennedy et al.
5,425,049	A	6/1995	Dent et al.
5,457,557	A	10/1995	Zarem et al.
5,463,376	A	10/1995	Stoffer
5,491,727	A	2/1996	Petit
5,504,775	A	4/1996	Chouly et al.
5,504,783	A	4/1996	Tomisato et al.
5,519,692	A	5/1996	Hershey
5,521,937	A	5/1996	Kondo et al.
5,528,581	A	6/1996	De Bot
5,533,012	A	7/1996	Fukasawa et al.
5,543,806	A	8/1996	Wilkinson
5,548,582	A	8/1996	Brajal et al.
5,555,268	A	9/1996	Fattouche et al.
5,563,906	A	10/1996	Hershey et al.
5,579,304	A	11/1996	Sugimoto et al.
5,612,978	A	3/1997	Blanchard et al.
5,630,154	A	5/1997	Bolstad et al.
5,640,698	A	6/1997	Shen et al.
5,691,832	A	11/1997	Liedenbaum et al.
5,694,393	A	12/1997	Kaye
5,704,013	A	12/1997	Watari et al.
5,712,716	A	1/1998	Vanoli et al.
5,765,097	A	6/1998	Dail
5,790,516	A	8/1998	Gudmundson et al.
5,793,413	A	8/1998	Hylton et al.
5,793,759	A	8/1998	Rakib et al.
5,809,426	A	9/1998	Radojevic et al.
5,815,801	A	9/1998	Hamalainen et al.
5,818,619	A	10/1998	Medved et al.
5,822,368	A	10/1998	Wang
5,828,658	A	10/1998	Ottersten et al.
5,831,977	A	11/1998	Dent
5,838,268	A	11/1998	Frenkel et al.
5,844,951	A	12/1998	Proakis et al.
5,862,189	A	1/1999	Huisken et al.
5,931,893	A	8/1999	Dent et al.
5,940,196	A	8/1999	Piehler et al.
5,940,379	A	8/1999	Startup et al.
5,943,322	A	8/1999	Mayor et al.
5,943,332	A	8/1999	Liu et al.
5,949,796	A	9/1999	Kumar
5,955,983	A	9/1999	Li
5,955,992	A	9/1999	Shattil
5,960,032	A	9/1999	Letaief et al.
5,991,334	A	11/1999	Papadopoulos et al.
6,008,760	A	12/1999	Shattil
6,018,317	A	1/2000	Dogan et al.
6,047,190	A	4/2000	Haleem et al.
6,055,432	A	4/2000	Haleem et al.
6,058,105	A	5/2000	Hochwald
6,075,812	A	6/2000	Cafarella et al.
6,084,871	A	7/2000	Engstrom et al.
6,088,351	A	7/2000	Jenkin et al.
6,091,967	A	7/2000	Kruys et al.
6,097,712	A	8/2000	Secord et al.
6,097,773	A	8/2000	Carter et al.
6,107,954	A	8/2000	Li
6,122,295	A	9/2000	Kato et al.
6,128,276	A	10/2000	Agee
6,128,350	A	10/2000	Shastri et al.
6,130,918	A	10/2000	Humphrey et al.
6,141,393	A	10/2000	Thomas et al.
RE36,944	E	11/2000	Li
6,144,711	A	11/2000	Raleigh et al.
6,154,443	A	11/2000	Huang et al.
6,175,550	B1	1/2001	van Nee et al.
6,175,551	B1	1/2001	Awater et al.
6,178,158	B1	1/2001	Suzuki et al.
6,188,717	B1	2/2001	Kaiser et al.
6,192,068	B1	2/2001	Fattouche et al.
6,208,295	B1	3/2001	Dogan et al.
6,211,671	B1	4/2001	Shattil
6,215,983	B1	4/2001	Dogan et al.
6,233,248	B1	5/2001	Sautter et al.
6,236,642	B1	5/2001	Shaffer et al.
6,240,129	B1	5/2001	Reusens et al.

(56) **References Cited**

U.S. PATENT DOCUMENTS

6,243,565	B1	6/2001	Smith et al.
6,243,581	B1	6/2001	Jawanda
6,252,909	B1	6/2001	Tzannes et al.
6,266,702	B1	7/2001	Darnell et al.
6,282,167	B1	8/2001	Michon et al.
6,282,185	B1	8/2001	Hakkinen et al.
6,289,220	B1	9/2001	Spear
6,292,473	B1	9/2001	Duske et al.
6,301,221	B1	10/2001	Paterson
6,307,892	B1	10/2001	Jones et al.
6,310,704	B1	10/2001	Dogan et al.
6,320,897	B1	11/2001	Fattouche et al.
6,331,837	B1	12/2001	Shattil
6,348,791	B2	2/2002	Shattil
6,351,499	B1	2/2002	Paulraj et al.
6,359,923	B1	3/2002	Agee et al.
6,377,566	B1	4/2002	Cupo et al.
6,389,034	B1	5/2002	Guo et al.
6,405,147	B1	6/2002	Fera
6,421,528	B1	7/2002	Rosen et al.
6,434,390	B2	8/2002	Rahman
6,438,173	B1	8/2002	Stantchev et al.
6,442,130	B1	8/2002	Jones, IV et al.
6,442,193	B1	8/2002	Hirsch
6,442,222	B1	8/2002	Ghazi-Moghadam et al.
6,452,981	B1	9/2002	Raleigh et al.
6,459,740	B1	10/2002	Lo
6,463,295	B1	10/2002	Yun
6,470,055	B1	10/2002	Feher
6,473,393	B1	10/2002	Ariyavisitakul et al.
6,473,418	B1	10/2002	Laroia et al.
6,496,290	B1	12/2002	Lee
6,504,862	B1	1/2003	Yang et al.
6,507,319	B2	1/2003	Sikina
6,510,133	B1	1/2003	Uesugi
6,512,737	B1	1/2003	Agee
6,526,105	B1	2/2003	Harikumar et al.
6,532,224	B1	3/2003	Dailey
6,549,581	B1	4/2003	Izumi et al.
6,563,881	B1	5/2003	Sakoda et al.
6,567,482	B1	5/2003	Popovic
6,567,982	B1	5/2003	Howe et al.
6,570,913	B1	5/2003	Chen
6,603,827	B2	8/2003	Bottomley et al.
6,606,351	B1	8/2003	Dapper et al.
6,631,175	B2	10/2003	Harikumar et al.
6,636,495	B1	10/2003	Tangemann
6,650,645	B2	11/2003	Scott et al.
6,654,408	B1	11/2003	Kadous et al.
6,654,719	B1	11/2003	Papadias
6,662,024	B2	12/2003	Walton et al.
6,665,521	B1	12/2003	Gorday et al.
6,667,714	B1	12/2003	Solondz
6,674,810	B1	1/2004	Cheng
6,674,999	B2	1/2004	Ramachandran
6,678,318	B1	1/2004	Lai
6,686,879	B2	2/2004	Shattil
6,687,511	B2	2/2004	McGowan et al.
6,693,984	B1	2/2004	Andre et al.
6,694,154	B1	2/2004	Molnar et al.
6,704,794	B1	3/2004	Kejriwal et al.
6,717,908	B2	4/2004	Vijayan et al.
6,728,295	B1	4/2004	Nallanathan et al.
6,747,946	B1	6/2004	Kaneko et al.
6,751,187	B2	6/2004	Walton et al.
6,757,344	B2	6/2004	Carleton et al.
6,760,373	B2	7/2004	Gross et al.
6,765,969	B1	7/2004	Vook et al.
6,778,514	B1	8/2004	Boccussi et al.
6,785,513	B1	8/2004	Sivaprakasam
6,813,485	B2	11/2004	Sorrells et al.
6,832,251	B1	12/2004	Gelvin et al.
6,850,481	B2	2/2005	Wu et al.
6,859,506	B1	2/2005	McCorkle
6,859,641	B2	2/2005	Collins et al.
6,882,619	B1	4/2005	Gerakoulis
6,907,270	B1	6/2005	Blanz
6,928,047	B1	8/2005	Xia
6,944,168	B2	9/2005	Paatela et al.
6,980,768	B2	12/2005	Arend et al.
6,982,968	B1	1/2006	Barratt et al.
6,985,533	B2	1/2006	Attallah et al.
6,996,076	B1	2/2006	Forbes et al.
7,009,958	B1	3/2006	Gerakoulis
7,010,015	B2	3/2006	Hervey
7,010,048	B1	3/2006	Shattil
7,020,110	B2	3/2006	Walton et al.
7,031,309	B1	4/2006	Sautter et al.
7,031,371	B1	4/2006	Lakkis
7,035,661	B1	4/2006	Yun
7,057,555	B2	6/2006	Lewis
7,075,999	B2	7/2006	Redfern
7,076,168	B1	7/2006	Shattil
7,082,153	B2	7/2006	Balachandran et al.
7,099,268	B2	8/2006	Ichihara et al.
7,139,321	B2	11/2006	Giannakis et al.
7,149,211	B2	12/2006	Bennett et al.
7,154,936	B2	12/2006	Bjerke et al.
7,155,255	B2	12/2006	Blum et al.
7,158,474	B1	1/2007	Gerakoulis
7,158,504	B2	1/2007	Kadaba et al.
7,194,766	B2	3/2007	Noehring et al.
7,197,084	B2	3/2007	Ketchum et al.
7,263,133	B1	8/2007	Miao
7,283,799	B2	10/2007	Shattil
7,286,604	B2	10/2007	Shattil
7,295,509	B2	11/2007	Laroia et al.
7,317,750	B2	1/2008	Shattil
7,366,117	B2	4/2008	Kim et al.
7,376,074	B2	5/2008	Jung et al.
7,391,804	B2	6/2008	Shattil
7,406,261	B2	7/2008	Shattil
7,418,043	B2	8/2008	Shattil
7,426,196	B2	9/2008	Gopalakrishnan et al.
7,430,257	B1	9/2008	Shattil
7,469,013	B1	12/2008	Bolt et al.
7,508,798	B2	3/2009	Tong et al.
7,570,956	B2	8/2009	Bigham et al.
7,594,010	B2	9/2009	Dohler et al.
7,606,137	B2	10/2009	Shattil
7,787,514	B2	8/2010	Shattil
7,801,247	B2	9/2010	Dnggosanusi et al.
7,876,729	B1	1/2011	Grilli et al.
7,907,588	B2	3/2011	Schaepperle et al.
8,031,583	B2	10/2011	Classon et al.
8,102,907	B2	1/2012	Kim
8,107,965	B2	1/2012	Hui et al.
8,301,139	B2	10/2012	Lotze et al.
8,320,301	B2	11/2012	Walton et al.
8,345,693	B1	1/2013	Kim
8,363,739	B2	1/2013	Ma et al.
8,391,913	B2	3/2013	Zimmer et al.
8,396,153	B1	3/2013	Shen et al.
8,416,837	B2	4/2013	Wu et al.
8,472,335	B2	6/2013	De Pasquale et al.
8,498,647	B2	7/2013	Gorokhov et al.
8,526,400	B2	9/2013	Tong et al.
8,670,390	B2	3/2014	Shattil
8,724,721	B2	5/2014	Soler Garrido
8,780,830	B2	7/2014	Doppler et al.
8,885,628	B2	10/2014	Palanki et al.
8,929,550	B2	1/2015	Shattil
8,942,082	B2	1/2015	Shattil
8,976,838	B2	3/2015	Jaeckel et al.
9,025,684	B2	5/2015	Jeong et al.
9,026,790	B2	5/2015	Bolton et al.
9,042,468	B2	5/2015	Barbu et al.
9,130,810	B2	9/2015	Laroia et al.
9,225,471	B2	12/2015	Shattil
9,485,063	B2	11/2016	Shattil
9,628,231	B2	4/2017	Shattil
9,693,339	B2	6/2017	Palanki et al.
9,768,842	B2	9/2017	Shattil
9,798,329	B2	10/2017	Shattil

(56) **References Cited**

U.S. PATENT DOCUMENTS

9,800,448 B1 10/2017 Shattil
9,819,449 B2 11/2017 Shattil
10,211,892 B2 2/2019 Shattil
10,243,773 B1 3/2019 Shattil
10,554,353 B2 2/2020 Zhao et al.
10,568,143 B2 2/2020 Delfeld et al.
10,602,507 B2 3/2020 Nammi et al.
10,903,970 B1 1/2021 Shattil
10,917,167 B2 2/2021 Jia et al.
2001/0050926 A1 12/2001 Kumar
2002/0009096 A1 1/2002 Odenwalder
2002/0034191 A1 3/2002 Shattil
2002/0044524 A1 4/2002 Laroia et al.
2002/0051433 A1 5/2002 Affes et al.
2002/0061068 A1 5/2002 Leva et al.
2002/0118727 A1 8/2002 Kim et al.
2002/0118781 A1 8/2002 Thomas et al.
2002/0127978 A1 9/2002 Khatri
2002/0137472 A1 9/2002 Quinn et al.
2002/0168016 A1 11/2002 Wang et al.
2002/0172184 A1 11/2002 Kim et al.
2002/0172213 A1 11/2002 Laroia et al.
2002/0181509 A1 12/2002 Mody et al.
2002/0193146 A1* 12/2002 Wallace H04B 7/0697 455/562.1
2002/0196733 A1 12/2002 Shen et al.
2003/0026222 A1 2/2003 Kotzin
2003/0043732 A1 3/2003 Walton et al.
2003/0072380 A1 4/2003 Huang
2003/0086363 A1 5/2003 Hernandes
2003/0128658 A1 7/2003 Walton et al.
2003/0133469 A1 7/2003 Brockmann et al.
2003/0147655 A1 8/2003 Shattil
2003/0154262 A1 8/2003 Kaiser et al.
2003/0161282 A1* 8/2003 Medvedev H04L 5/0025 370/208
2003/0169824 A1 9/2003 Chayat
2003/0206527 A1 11/2003 Yim
2003/0218973 A1 11/2003 Oprea et al.
2004/0013101 A1 1/2004 Akin et al.
2004/0017824 A1 1/2004 Koenck
2004/0047405 A1 3/2004 Boesel et al.
2004/0057501 A1 3/2004 Balachandran et al.
2004/0086027 A1 5/2004 Shattil
2004/0100897 A1 5/2004 Shattil
2004/0141548 A1 7/2004 Shattil
2004/0151109 A1 8/2004 Batra et al.
2004/0223476 A1 11/2004 Jose et al.
2004/0243258 A1 12/2004 Shattil
2005/0058098 A1 3/2005 Klein et al.
2005/0075081 A1 4/2005 Catreux-Erceg et al.
2005/0078742 A1 4/2005 Cairns et al.
2005/0179607 A1 8/2005 Gorsuch et al.
2005/0198199 A1 9/2005 Dowling
2005/0255808 A1 11/2005 Ahmed et al.
2005/0259627 A1 11/2005 Song et al.
2005/0265275 A1 12/2005 Howard et al.
2005/0265293 A1 12/2005 Ro et al.
2005/0270968 A1 12/2005 Feng et al.
2005/0286476 A1 12/2005 Crosswy et al.
2006/0023803 A1 2/2006 Perlman et al.
2006/0034378 A1 2/2006 Lindskog et al.
2006/0057958 A1 3/2006 Ngo et al.
2006/0106600 A1 5/2006 Bessette
2006/0153283 A1 7/2006 Scharf et al.
2006/0245346 A1 11/2006 Bar-Ness et al.
2006/0262870 A1 11/2006 Khan
2007/0041311 A1 2/2007 Baum et al.
2007/0041404 A1 2/2007 Palanki et al.
2007/0071125 A1 3/2007 Tan et al.
2007/0081580 A1 4/2007 Breiling
2007/0078924 A1 5/2007 Hassan et al.
2007/0140102 A1 6/2007 Oh et al.
2007/0160014 A1 7/2007 Larsson
2007/0177681 A1 8/2007 Choi et al.
2007/0183386 A1 8/2007 Muharemovic et al.
2007/0211807 A1 9/2007 Han et al.
2008/0095121 A1 4/2008 Shattil
2008/0151743 A1 6/2008 Tong et al.
2008/0240022 A1 10/2008 Yoon et al.
2008/0298502 A1 12/2008 Ku et al.
2008/0310484 A1 12/2008 Shattil
2009/0092182 A1 4/2009 Shin et al.
2009/0110033 A1 4/2009 Shattil
2009/0147870 A1 6/2009 Lin et al.
2009/0156252 A1 6/2009 Harris
2009/0274103 A1 11/2009 Yang et al.
2009/0304108 A1 12/2009 Kwon et al.
2010/0039928 A1 2/2010 Noh et al.
2010/0041350 A1 2/2010 Zhang et al.
2010/0056200 A1 3/2010 Tolonen
2010/0080112 A1 4/2010 Bertrand et al.
2010/0091919 A1 4/2010 Xu et al.
2010/0098042 A1 4/2010 Dent
2010/0110875 A1 5/2010 No et al.
2010/0165829 A1 7/2010 Narasimha et al.
2010/0184369 A1 7/2010 Cho et al.
2010/0185541 A1 7/2010 Hassan et al.
2010/0254484 A1 10/2010 Hamaguchi et al.
2010/0254497 A1 10/2010 To et al.
2010/0317343 A1 12/2010 Krishnamurthy et al.
2011/0041021 A1 2/2011 Khoshnevis et al.
2011/0058471 A1 3/2011 Zhang
2011/0096658 A1 4/2011 Yang et al.
2011/0135016 A1 6/2011 Ahn et al.
2011/0206207 A1 8/2011 Priotti
2011/0228878 A1 9/2011 Sorrentino
2011/0281534 A1 11/2011 Liao et al.
2012/0014392 A1 1/2012 Bhushan et al.
2012/0057660 A1 3/2012 Nguyen et al.
2012/0087393 A1 4/2012 Jeong et al.
2012/0113816 A1 5/2012 Bhattad et al.
2012/0188994 A1 7/2012 Palanki et al.
2012/0213054 A1 8/2012 Hamaguchi et al.
2012/0224517 A1 9/2012 Yun et al.
2012/0250740 A1 10/2012 Ling
2012/0252387 A1 10/2012 Haskins et al.
2012/0269285 A1 10/2012 Jeong et al.
2012/0294346 A1 11/2012 Kolze
2013/0058239 A1 3/2013 Wang et al.
2013/0077508 A1 3/2013 Axmon et al.
2013/0142275 A1 6/2013 Baik et al.
2013/0315211 A1 11/2013 Balan et al.
2014/0064392 A1 3/2014 Jonsson et al.
2014/0086186 A1 3/2014 Hamaguchi et al.
2014/0198863 A1 7/2014 Terry
2014/0348253 A1 11/2014 Mobasher et al.
2015/0009971 A1 1/2015 Han et al.
2015/0103723 A1 4/2015 Kim et al.
2015/0195840 A1 7/2015 Ahn et al.
2015/0271000 A1 9/2015 Yang et al.
2015/0304153 A1 10/2015 Moffatt et al.
2015/0358190 A1 12/2015 Kruglick et al.
2016/0006594 A1 1/2016 Persson et al.
2016/0050096 A1 2/2016 DelMarco
2016/0050099 A1 2/2016 Siohan et al.
2016/0197756 A1 7/2016 Mestdagh et al.
2016/0254889 A1 9/2016 Shattil
2016/0269083 A1 9/2016 Porat et al.
2016/0344497 A1 11/2016 Myung et al.
2016/0353446 A1 12/2016 Abdoli et al.
2017/0019284 A1 1/2017 Ankarali et al.
2017/0026218 A1 1/2017 Shattil
2017/0054480 A1 2/2017 Shattil et al.
2017/0126454 A1 5/2017 Huan et al.
2017/0126458 A1 5/2017 Shattil
2017/0134202 A1 5/2017 Baligh et al.
2017/0134235 A1 5/2017 Wu et al.
2017/0250848 A1 8/2017 Lee et al.
2017/0264474 A1 9/2017 He et al.
2017/0279648 A1 9/2017 Song et al.
2017/0295000 A1 10/2017 Yoo et al.
2017/0353340 A1 12/2017 Raphaeli et al.
2018/0062904 A1 3/2018 Hwang et al.

(56) **References Cited**

U.S. PATENT DOCUMENTS

2018/0091338	A1	3/2018	Mayer et al.
2018/0092086	A1	3/2018	Nammi et al.
2018/0109408	A1	4/2018	Sandell et al.
2018/0167244	A1	6/2018	Cheng et al.
2018/0191543	A1	7/2018	Park et al.
2018/0212810	A1	7/2018	Park et al.
2018/0288809	A1	10/2018	Delfeld et al.
2019/0036657	A1	1/2019	Zhao et al.

FOREIGN PATENT DOCUMENTS

JP	H08331093	12/1996
JP	2012-100323	5/2012
KR	10-2010-0019974	2/2010
WO	0237771	5/2002

OTHER PUBLICATIONS

E. Hajlaoui, M. Abdellaoui; "SOCP Approach for Reducing PAPR for MIMO-OFDM Via Tone Reservation"; International Journal of Distributed and Parallel Systems (IJDPS) vol. 2, No. 3, May 2011.
J. Shin, B. Seo; "PAPR Reduction Scheme for MISO and MIMO OFDM Systems with Limited Feedback"; WSEAS Transactions on Communications 13:355-362—Jan. 2014.
D Sinanovic, et al.; "Low PAPR Spatial Modulation for SC-FDMA"; IEEE Transactions on Vehicular Technology; vol. 66, Issue: 1, Jan. 2017.
G.H. Karande, et al.; "Peak-to-Average Power Reduction in MIMO-OFDM Systems using SLM technique"; IPASJ International Journal of Electronics & Communication (IIJEC); vol. 2, Issue 8, Aug. 2014.
M. Lieberei, U. Zolzer; "Time Domain PAPR Reduction in MIMO-OFDM Spatial Multiplexing Systems"; in Proceedings of the 14th International OFDM-Workshop (InOWo'09), S. 218-222, 2009.
M. Vu, A. Paulraj; "MIMO Wireless Linear Precoding"; IEEE Signal Processing Magazine. Submitted Feb. 2006, revised Nov. 2006 and Dec. 2006.
H.G. Myung, et al.; "Peak Power Characteristics of Single Carrier FDMA MIMO Precoding System"; 2007 IEEE 66th Vehicular Technology Conference, Sep. 30-Oct. 3, 2007.
S. Naik, et al.; "Reduction of PAPR in MIMO-OFDM/A System Using Polyphase Complementary Modulation"; International Journal of Innovative Research in Computer and Communication Engineering; vol. 2, Issue 5, May 2014.
A.S. Parihar, A. Rai; "A Review: PAPR Reduction Techniques in MIMO OFDM System"; International Journal of Engineering and Innovative Technology (IJEIT); vol. 4, Issue 12, Jun. 2015.
S. Rihawi, Y.Louet; "Papr Reduction Scheme with SOCP for MIMO-OFDM Systems"; I. J. Communications, Network and System Sciences. 2008; 1: 1-103; Published Online Feb. 2008 in SciRes (http://www.SRPublishing.org/journnal/ijens/).
C.A. Devlin, et al.; "Peak to Average Power Ratio Reduction Technique for OFDM Using Pilot Tones and Unused Carriers"; 2008 IEEE Radio and Wireless Symposium; Year: 2008; pp. 33-36.
K Mhatre, U.P. Khot; "Efficient Selective Mapping PAPR Reduction Technique"; International Conference on Advanced Computing Technologies and Applications (ICACTA-2015); Procedia Computer Science 45 (2015) 620-627.
K. Srinivasarao, et al.; "Peak-to-Average Power Reduction in MIMO-OFDM Systems Using Sub-Optimal Algorithm"; International Journal of Distributed and Parallel Systems (IJDPS) vol. 3, No. 3, May 2012.
K. Xu, et al.; "Beamforming MISO-OFDM PAPR Reduction: A Space-User Perspective"; 2007 IEEE International Conference on Acoustics, Speech and Signal Processing—ICASSP '07, Apr. 15-20, 2007.
H. Zhang, D.L. Goeckel; "Peak Power Reduction in Closed-Loop MIMO-OFDM Systems via Mode Reservation"; IEEE Communications Letters, vol. 11, No. 7, Jul. 2007.
C.L. Wang, Y. Ouyang; "Low-Complexity Selected Mapping Schemes for Peak-to-Average Power Ratio Reduction n OFDM Systems"; IEEE Transactions on Signal Processing, vol. 53, No. 12, Dec. 2005.
P. Sindhu, G. Krishnareddy; "Peak and Average Power Reduction in OFDM System with Trellis Shaping Method"; International Journal of Advanced Research in Electrical, Electronics and Instrumentation Engineering; vol. 6, Issue 7, Jul. 2017.
H-B Jeon, et al.; "Bit-Based SLM Schemes for PAPR Reduction in QAM Modulated OFDM Signals"; IEEE Transactions on Broadcasting, vol. 55, No. 3, Sep. 2009.
H-B Jeon, et al.; "A Low-Complexity SLM Scheme Using Additive Mapping Sequences for PAPR Reduction of OFDM Signals"; IEEE Transactions on Broadcasting, vol. 57, No. 4, Dec. 2011.
S-J Heo, et al.; "A Modified SLM Scheme With Low Complexity for PAPR Reduction of OFDM Systems"; IEEE Transactions on Broadcasting, vol. 53, No. 4, Dec. 2007.
M.I. Abdullah, et al.; "Comparative Study of PAPR Reduction Techniques in OFDM"; ARPN Journal of Systems and Software; vol. 1, No. 8, Nov. 2011.
E. Abdullah, et al.; "Modified selective mapping scheme with low complexity for minimizing high peakaverage power ratio in orthogonal frequency division multiplexing system"; AIP Conference Proceedings 1774, 050005 (2016).
S.T. O'Hara, J.R. Periard; "Orthogonal-Coded Selective Mapping (OCSM) for OFDM Peakto-Average Power Reduction Without Side Information"; Proceeding of the SDR 04 Technical Conference and Product Exposition 2004, Syracuse, NY, Technology Center—Syracuse Research Corporation. 2004.
P. Sharma, S. Verma; "Papr Reduction of OFDM Signals Using Selective Mapping With Turbo Codes"; International Journal of Wireless & Mobile Networks (IJWMN) vol. 3, No. 4, Aug. 2011.
D. Wiegandt et al., "Overcoming peak-to-average power ratio issues in OFDM via carrier-interferometry codes", VTC 2001 Fall. IEEE VTS 54th Vehicular Technology Conference, 2001, vol. 2, pp. 660-663, Oct. 7-11, 2001.
B. Natarajan, et al. "Crest factor considerations in MC-CDMA with carrier interferometry codes", PACRIM. 2001 IEEE Communications Pacific Rim Conference on Computers and signal Processing, 2001, vol. 2, pp. 445-448 Aug. 26-28, 2001.
C.R. Nassar et al., "High-Performance Broadband DS-CDMA via Carrier Interferometry Chip Shaping," 2000 Int'l Symposium on Advanced Radio Technologies, Boulder, CO, Sep. 6-8, 2000.
C.R. Nassar, B. Natarajan, S. Shattil, "Introduction of carrier interference to spread spectrum multiple access," Wireless Communications and Systems, 1999 Emerging Technologies Symposium Apr. 12-13, 1999 pp. 4.1-4.5.
B. Natarajan, C.R. Nassar, S. Shattil, M. Michelini, and Z. Wu; "High-Performance MC-CDMA Via Carrier Interferometry Codes," Vehicular Technology, IEEE Transactions on; vol. 50, Issue 6, Nov. 2001, pp. 1344-1353.
Z. Wu, B. Natarajan, C.R. Nassar, S. Shattil; "High-performance, high-capacity MC-CDMA via carrier interferometry," Personal, Indoor and Mobile Radio Communications, 2001 12th IEEE International Symposium on; vol. 2, Sep. 30-Oct. 3, 2001 pp. G-11-G-16.
S.A. Zekavat, C.R. Nassar, S. Shattil; "The merger of a single oscillating-beam smart antenna and MC-CDMA: transmit diversity, frequency diversity and directionality," Broadband Communications for the Internet Era Symposium digest, 2001 IEEE Emerging Technologies Symposium on Sep. 10-11, 2001 pp. 107-112.
B. Natarajan, C.R. Nassar, S. Shattil; "Enhanced Bluetooth and IEEE 802.11 (FH) via multi-carrier implementation of the physical layer," Broadband Communications for the Internet Era Symposium digest, 2001 IEEE Emerging Technologies Symposium on; Sep. 10-11, 2001 pp. 129-133.
Z. Wu; C.R. Nassar, S. Shattil; "Ultra wideband DS-CDMA via innovations in chip shaping," Vehicular Technology Conference, 2001. VTC 2001 Fall. IEEE VTS 54th; vol. 4, Oct. 7-11, 2001 pp. 2470-2474.
B. Natarajan, C.R. Nassar, S. Shattil; "Innovative pulse shaping for high-performance wireless TDMA," Communications Letters, IEEE vol. 5, Issue 9, Sep. 2001 pp. 372-374.
B.Natarajan, C.R. Nassar and S.Shattil; "Throughput Enhancement in TDMA through Carrier Interference Pulse Shaping," IEEE Vehicu-

(56) **References Cited**

OTHER PUBLICATIONS

lar technology Conference Proceedings, vol. 4, Fall 2000, Boston, Sep. 24-28, 2000, pp. 1799-1803.
V.Thippavajjula, B.Natarajan; "Parallel Interference Cancellation Techniques for Synchronous Carrier Interferometry/MC-CDMA Uplink"; IEEE 60th Vehicular Technology Conference, 2004. VTC2004-Fall. Sep. 26-29, 2004.
A. Serener, et al.; "Performance of Spread OFDM with LDPC Coding in Outdoor Environments"; 2003 IEEE 58th Vehicular Technology Conference. VTC 2003-Fall (IEEE Cat. No.03CH37484), Oct. 6-9, 2003.
LTE: Evolved Universal Terrestrial Radio Access (E-UTRA); Multiplexing and channel coding (3GPP TS 36.212 version 8.8.0 Release 8), Jan. 2010.
LTE: Evolved Universal Terrestrial Radio Access (E-UTRA); Physical channels and modulation (3GPP TS 36.211 version 8.7.0 Release 8), Jun. 2009.
B.Natarajan, C.R. Nassar and S.Shattil; "CI/FSK: Bandwidth-Efficient Multicarrier FSK for High Performance, High Throughput, and Enhanced Applicability"; IEEE Transactions on Communications, vol. 52, No. 3, Mar. 2004.
G. Wunder, K.G. Paterson; "Crest-Factor Analysis of Carrier Interferometry MC-CDMA and OFDM systems"; International Symposium onInformation Theory, 2004 ISIT 2004. Proceedings. Jun. 27-Jul. 2, 2004.
B.Natarajan, C.R. Nassar "Crest Factor Reduction in MC-CDMA Employing Carrier Interferometry Codes"; EURSAP Journal on Wireless Comm. and Networking 2004:2, 374-379.
A.J. Best, B.Natarajan;"The Effect of Jamming on the Performance of Carrier Interferometry/OFDM"; WiMob'2005), IEEE International Conference on Wireless and Mobile Computing, Networking And Communications, 2005. Aug. 24-22, 2005.
S. Hijazi, et al.; "Enabling FCC's Proposed Spectral Policy via Carrier Interferometry"; 2004 IEEE Wireless Communications and Networking Conference (IEEE Cat. No.04TH8733). Mar. 21-25, 2004.
Z. Wu, et al.; "FD-MC-CDMA: A Frequency-based Multiple Access Architecture for High Performance Wireless Communication"; Proceedings RAWCON 2001. 2001 IEEE Radio and Wireless Conference (Cat.No. 01EX514). Aug. 19-22, 2001.
P. Barbosa, et al.; "High-Performance MIMO-OFDM via Carrier Interferometry"; GLOBECOM '03. IEEE Global Telecommunications Conference (IEEE Cat. No. 03CH37489). Dec. 1-5, 2003.
D.A. Wiegandt, C.R. Nassar; "High-Throughput, High-Performance OFDM via Pseudo-Orthogonal Carrier Interferometry"; 12th IEEE International Symposium on Personal, Indoor and Mobile Radio Communications. PIMRC 2001. Proceedings (Cat. No. 01TH8598) Oct. 3-Sep. 30, 2001.
D.A. Wiegandt, C.R. Nassar; "High-Throughput, High-Performance OFDM via Pseudo-Orthogonal Carrier Interferometry Type 2"; The 5th International Symposium on Wireless Personal Multimedia Communications. Oct. 27-30, 2002.
D.A. Wiegandt, C.R. Nassar; "High-Throughput, High-Performance OFDM via Pseudo-Orthogonal Carrier Interferometry Spreading Codes"; IEEE Transactions on Communications, vol. 51, No. 7, pp. 1123-1134. Jul. 2003.
C-Y. Hsu, et al.; "Novel SLM Scheme with Low-Complexity for PAPR Reduction in OFDM System", IEICE Trans. Fundamentals, vol. E91-A. No. 7, pp. 1689-1696, Jul. 2008.
N. Jacklin, et al.; "A Linear Programming Based Tone Injection Algorithm for PAPR Reduction of OFDM and Linearly Precoded Systems", IEEE Trans. on Circuits and Systems-I: Regular Papers, vol. 60, No. 7, pp. 1937-1945, Jul. 2013.
D.A. Wiegandt, C.R. Nassar; "Higher-Speed, Higher-Performance 802.11a Wireless LAN via Carrier-Interferometry Orthogonal Frequency Division Multiplexing"; 2002 IEEE International Conference on Communications. Conference Proceedings. ICC 2002 (Cat. No. 02CH37333). Apr. 28-May 2, 2002.
Z. Wu, et al.; "High-Performance 64-QAM OFDM via Carrier Interferometry Spreading Codes"; 2003 IEEE 58th Vehicular Technology Conference. VTC 2003-Fall (IEEE Cat. No .03CH37484). Oct. 6-9, 2003.
B.Natarajan, C.R. Nassar and S.Shattil; "High-Throughput High-Performance TDMA Through Pseudo-Orthogonal Carrier Interferometry Pulse Shaping"; IEEE Transactions on Wireless Communications, vol. 3, No. 3, May 2004.
B.Natarajan, C.R. Nassar; "Introducing Novel FDD and FDM in MC-CDMA to Enhance Performance"; RAWCON 2000. 2000 IEEE Radio and Wireless Conference (Cat. No. 00EX404). Sep. 13-13, 2000.
B.Natarajan, Z Wu, C.R. Nassar and S Shattil; "Large Set of CI Spreading Codes for High-Capacity MC-CDMA"; IEEE Transactions on Communications, vol. 52, No. 11, Nov. 2004.
B.Natarajan, C.R. Nassar, Z Wu; "Multi-carrier platform for wireless communications. Part 1: High-performance, high-throughput TDMA and DS-CDMA via multi-carrier implementations"; Wireless Communications and Mobile Computing; Wirel. Commun. Mob. Comput. 2002; 2:357-379 (DOI: 10.1002/wcm.51) Jun. 18, 2002.
S.A. Zekavat, C.R. Nassar and S.Shattil; "Merging Multicarrier CDMA and Oscillating-Beam Smart Antenna Arrays: Exploiting Directionality, Transmit Diversity, and Frequency Diversity"; IEEE Transactions on Communications, vol. 52, No. 1, pp. 110-119, Jan. 2004.
C.R. Nassar, B.Natarajan, Z. Wu, D. Wiegandt, and S.Shattil; Multi-Carrier Technologies for Wireless Communication; Kluwer Academic Publishers 2002.
B.Natarajan, C.R. Nassar, S. Shattil; "Novel Multi-Carrier Implementation of FSK for Bandwidth Efficient, High Performance Wireless Systems"; 2002 IEEE International Conference on Communications. Conference Proceedings. ICC 2002 (Cat. No. 02CH37333) Apr. 28-May 2, 2002.
D.A. Wiegandt, C.R. Nassar, Z. Wu; "Overcoming Peak-to-Average Power Ratio Issues in OFDM via Carrier-Interferometry Codes"; IEEE 54th Vehicular Technology Conference. VTC Fall 2001. Proceedings (Cat. No. 01CH37211), Oct. 7-11, 2001.
D.A. Wiegandt, C.R. Nassar; "Peak-to-Average Power Reduction in High-Performance, High-Throughput OFDM via Pseudo-Orthogonal Carrier-Interferometry Coding"; PACRIM. 2001 IEEE Pacific Rim Conference on, vol. 2, Feb. 2001.
X. Lin, et al.; "5G New Radio: Unveiling the Essentials of the Next Generation Wireless Access Technology"; IEEE Communications Standards Magazine (vol. 3 , Issue: 3 , Sep. 2019) pp. 30-37. Dec. 6, 2019.
"D2.2 Architecture, system and interface definitions of a 5G for Remote Area network"; Project website: http://5g-range.eu; Version 1 date Apr. 26, 2018.
R. Rani, et al.; "Peak-to-Average Power Ratio Analysis of SCFDMA Signal by Hybrid Technique"; International Journal of Computer Applications (0975-8887) vol. 69—No. 15, May 2013.
H. Kim, et al.; "Multiple Access for 5G New Radio: Categorization, Evaluation, and Challenges"; arXiv:1703.09042 [cs.IT], Mar. 27, 2017.
A. Anand, et al.; "Joint Scheduling of URLLC and eMBB Traffic in 5G Wireless Networks"; IEEE INFOCOM 2018—IEEE Conference on Computer Communications; Apr. 16-19, 2018.
Ml. Bennis, et al.; "Ultra-Reliable and Low-Latency Wireless Communication: Tail, Risk and Scale"; Proceedings of the IEEE (vol. 106 , Issue: 10 , Oct. 2018).
B.G. Agee; "Efficient Allocation of RF Transceiver Resources in Spatially Adaptable Communication Networks"; SDR Forum/MPRG Workshop on Advanced in Smart Antennas for Software Radios, At Virginia Polytechnic Institute, Blacksburg, VA.
C.A. Azurdia-Meza, et al.; "PAPR reduction in SC-FDMA by pulse shaping using parametric linear combination pulses"; IEEE Communications Letters, vol. 16, No. 12, Dec. 2012.
C.A. Azurdia-Meza, et al.; "PAPR Reduction in Single Carrier FDMA Uplink by Pulse Shaping Using a β-α Filter"; Wireless Pers Commun 71, 23-44 (2013). https://doi.org/10.1007/s11277-012-0794-0; Aug. 9, 2012.

(56) **References Cited**

OTHER PUBLICATIONS

A Hamed, et al.; "Bandwidth and Power efficiency analysis of fading communication link"; 2016 International Symposium on Performance Evaluation of Computer and Telecommunication Systems (SPECTS); Jul. 24-27, 2016.
Y. Akhtman, L Hanzo; "Power Versus Bandwidth Efficiency in Wireless Communications: from Economic Sustainability to Green Radio"; China Communications 7(2) • Apr. 2010.
L. Militano, et al.; "Device-to-Device Communications for 5G Internet of Things"; EAI Endorsed Transactions on Internet of Things; Ghent vol. 1, Iss. 1, (Oct. 2015).
M. Vergara, et al.; "Multicarrier Chip Pulse Shape Design With Low PAPR"; 21st European Signal Processing Conference (EUSIPCO 2013); Sep. 9-13, 2013.
C. Liu, et al.; "Experimental demonstration of high spectral efficient 4×4 MIMO SCMA-OFDM/OQAM radio over multi-core fiber system"; Optics Express 18431, vol. 25, No. 15 | Jul. 24, 2017.
F. Wei, et al.; "Message-Passing Receiver Design for Joint Channel Estimation and Data Decoding in Uplink Grant-Free SCMA Systems"; IEEE Transactions on Communications, vol. 18 , Issue: 1 , Jan. 2019: Nov. 6, 2018.
H. Jiang, et al.; "Distributed Layered Grant-Free Non-Orthogonal Multiple Access for Massive MTC"; 2018 IEEE 29th Annual International Symposium on Personal, Indoor and Mobile Radio Communications (PIMRC); Sep. 9-12, 2018.
S. Sengar, P.B. Bhattacharya; "Performance Improvement in OFDM System by PAPR Reduction Using Pulse Shaping Technique"; International Journal of Emerging Technology and Advanced Engineering, vol. 2, Issue 12, Dec. 2012.
B.H. Alhassoun; "Peak-to-Average-Power-Ratio (PAPR) Reduction Techniques for Orthogonal-Frequency-Division-Multiplexing (OFDM) Transmission"; Thesis, University of Denver, Jun. 1, 2012.
A. Boonkajay, et al.; "Performance Evaluation of Low-PAPR Transmit Filter for Single-Carrier Transmission"; 2012 18th Asia-Pacific Conference on Communications (APCC); Oct. 15-17, 2012.
D. Das; "Peak to Average Power Ratio Reduction in OFDM Using Pulse Shaping Technique"; Computer Engineering and Applications vol. 5, No. 2, ISSN: 2252-5459 (Online) Jun. 2016.
D. Wulich, et al.; "Peak to Average Power Ratio in Digital Communications"; https://www.academia.edu/6222108/Peak_to_Average_Power_Ratio_in_Digital_Communications 2005.
S. Singh, et al.; "Analysis of Roll-Off-Factor to Reduce the Papr in SC-FDMA System"; International Journal of Computational Intelligence Techniques, ISSN: 0976-0466 & E-ISSN: 0976-0474, vol. 3, Issue 2, 2012, pp. 76-78.
M. Mahlouji, T. Mahmoodi; "Analysis of Uplink Scheduling for Haptic Communications"; arXiv:1809.09837 [cs.NI], Sep. 26, 2018.
K. Au, et al.; "Uplink Contention Based SCMA for 5G Radio Access"; 2014 IEEE Globecom Workshops (GC Wkshps), Dec. 8-12, 2014.
S. Shah, A.R. Patel; "LTE-Single Carrier Frequency Division Multiple Access"; Jan. 1, 2010.
S.L. Ariyavisitakul, et al.; "Frequency Domain Equalization for Single-Carrier Broadband Wireless Systems"; IEEE Communications Magazine (vol. 40 , Issue: 4 , Apr. 2002); pp. 58-66, Aug. 7, 2002.
A. Agarwal and P. R. Kumar, "Improved capacity bounds for wireless networks." Wireless Communications and Mobile Computing, vol. 4, pp. 251-261, 2004.
J.F. Cardoso, A. Souloumiac, "Blind Beamforming for non-Gaussian Signals," IEEE-Proceedings-F, vol. 140, No. 6, pp. 362-370, Dec. 1993.
D. Galda; H. Rohling, "A low complexity transmitter structure for OFDM-FDMA uplink systems", IEEE 55th Vehicular Technology Conference. VTC Spring 2002, May 6-9, 2002.
P. Gupta and P. R. Kumar, "The Capacity of Wireless Networks," IEEE Trans. Info. Theory, vol. IT-46, No. 2, Mar. 2000, pp. 388-404.
T. Kailath, Linear Systems, Prentice-Hall, Inc., 1980.
T. May; H. Rohling, "Reducing the peak-to-average power ratio in OFDM radio transmission systems", VTC '98. 48th IEEE Vehicular Technology Conference. May 21-21, 1998.
J.D. Schaffer, "Multiple objective optimization with vector evaluated genetic algorithms," Proceedings of 1st International Conference on Genetic Algorithms, 1991, pp. 93-100.
Z. Wu, C.R. Nassar, "Combined Directionality and Transmit Diversity via Smart Antenna Spatial Sweeping," RAWCON 2000, IEEE Radio and Wireless Conference 2000, p. 103-106. Sep. 13, 2000.
S.A. Zekavat; C.R. Nassar; S. Shattil, "Combining multi-input single-output systems and multi-carrier systems: achieving transmit diversity, frequency diversity and directionality".
S.A. Zekavat, C. R. Nassar and S. Shattil, "Smart antenna spatial sweeping for combined directionality and transmit diversity," Journal of Communications and Networks (JCN), Special Issue on Adaptive Antennas for Wireless Communications, vol. 2, No. 4, pp. 325-330, Dec. 2000.
E. Zitzler and L. Thiele, "Multiobjective evolutionary algorithms: A comparative case study and the strength pareto approach," IEEE Tran. on Evol. Comput., vol. 3, No. 4, Nov. 1999, pp. 257-271.
D. Gerakoulis and E. Geraniotis, CDMA: Access and Switching for Terrestrial and Satellite Networks, John Wiley & Sons, LTD, 2001.
ITU-T, Asymmetric Digital Subscriber Line (ADSL) Transceivers, G.992.1, Jun. 1999.

* cited by examiner

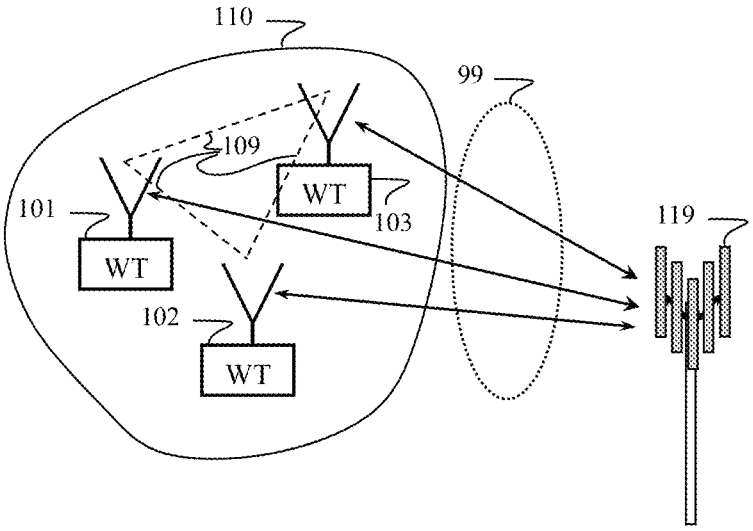

FIGURE 1A

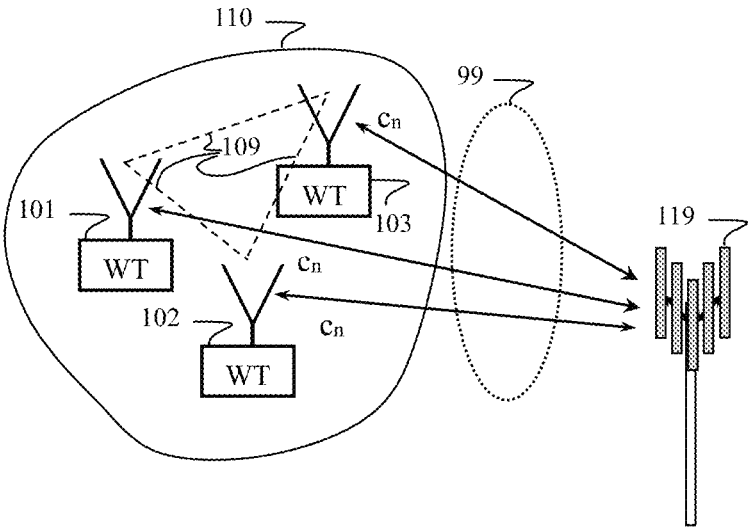

FIGURE 1B

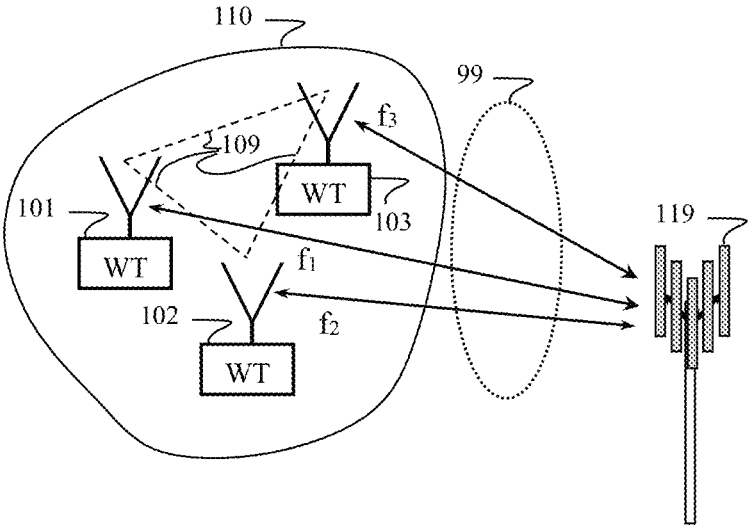

FIGURE 1C

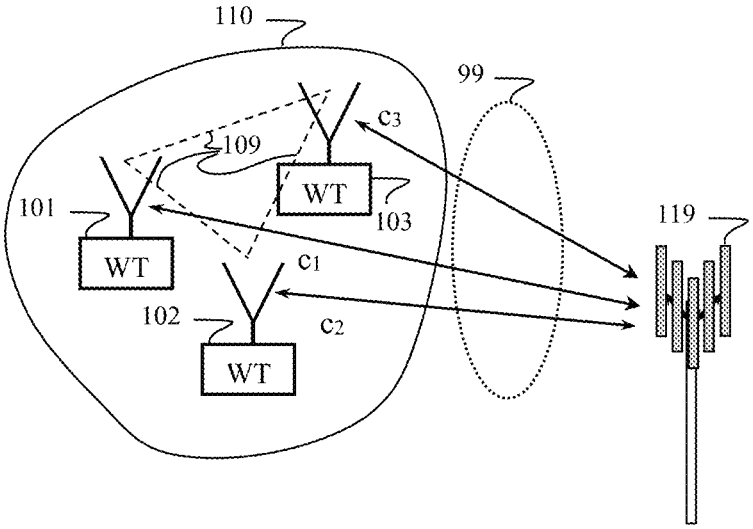

FIGURE 1D

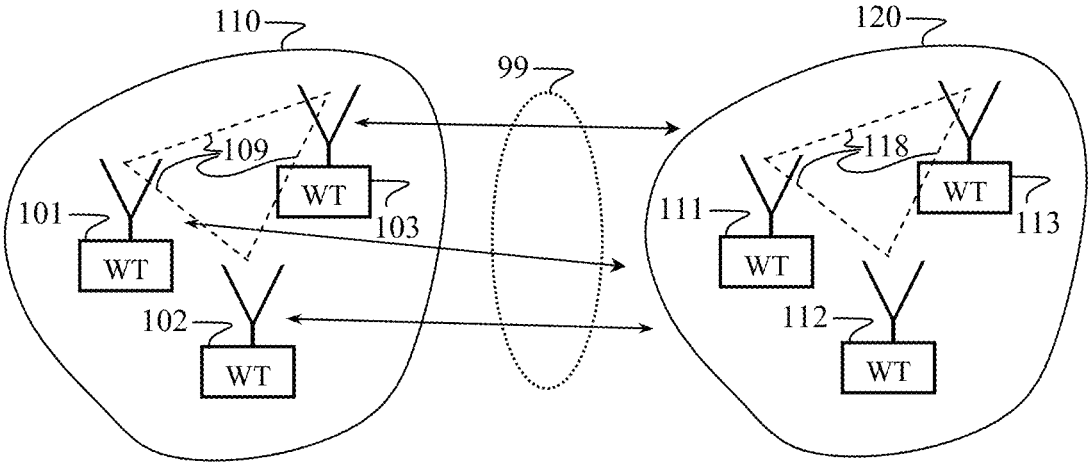

FIGURE 1E

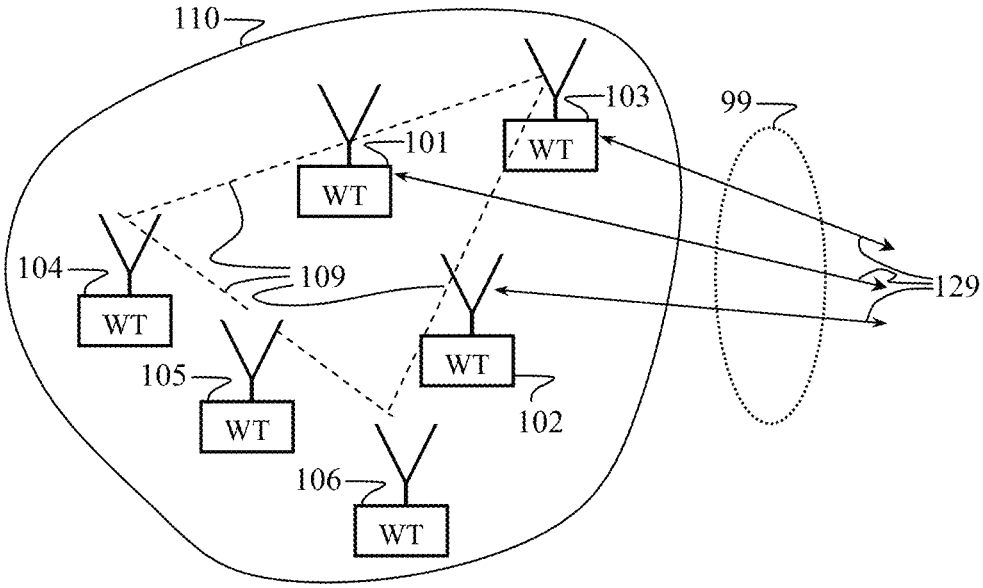

FIGURE 1F

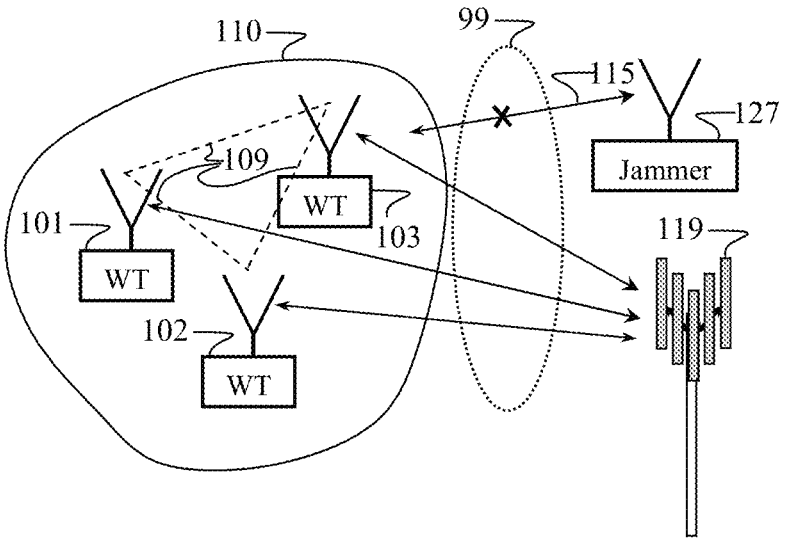

FIGURE 1G

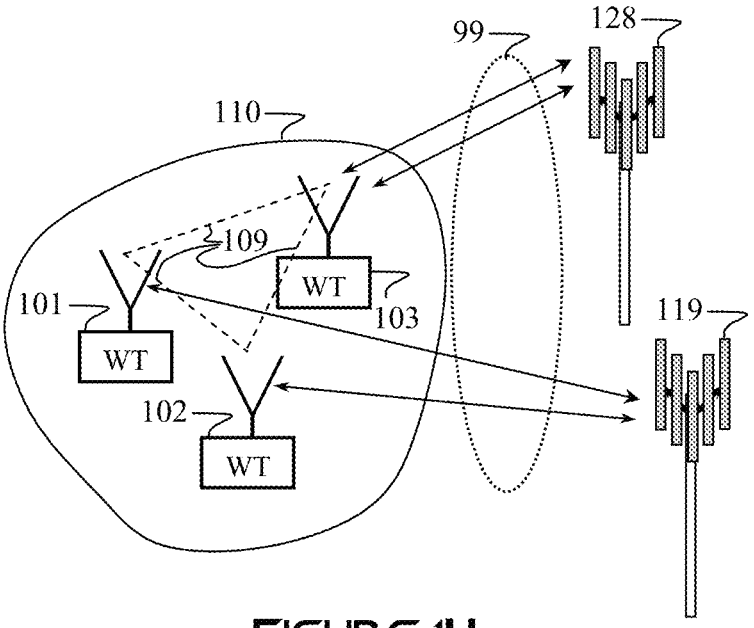

FIGURE 1H

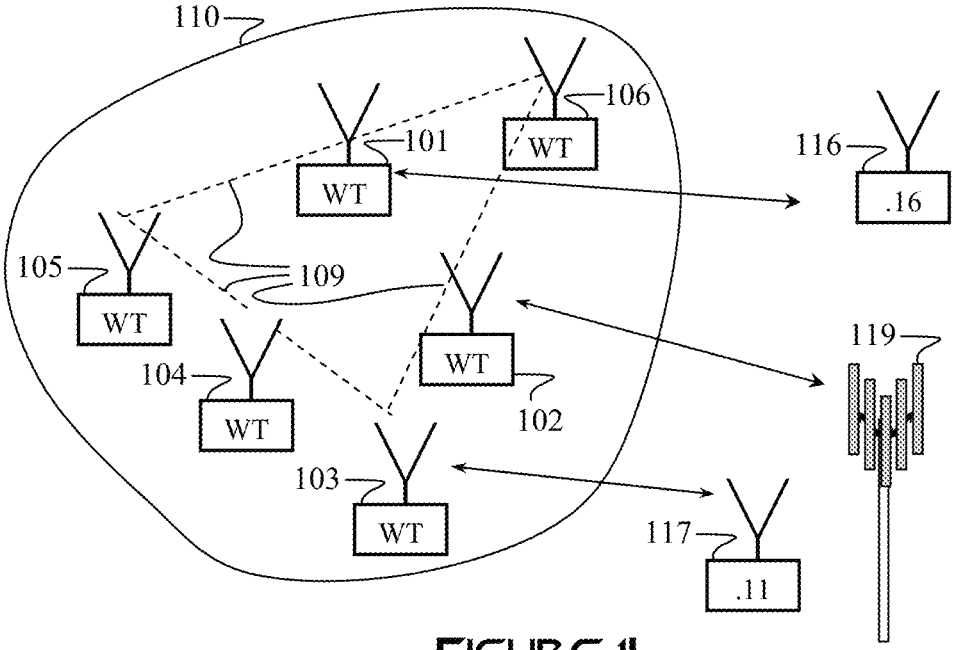

FIGURE 1I

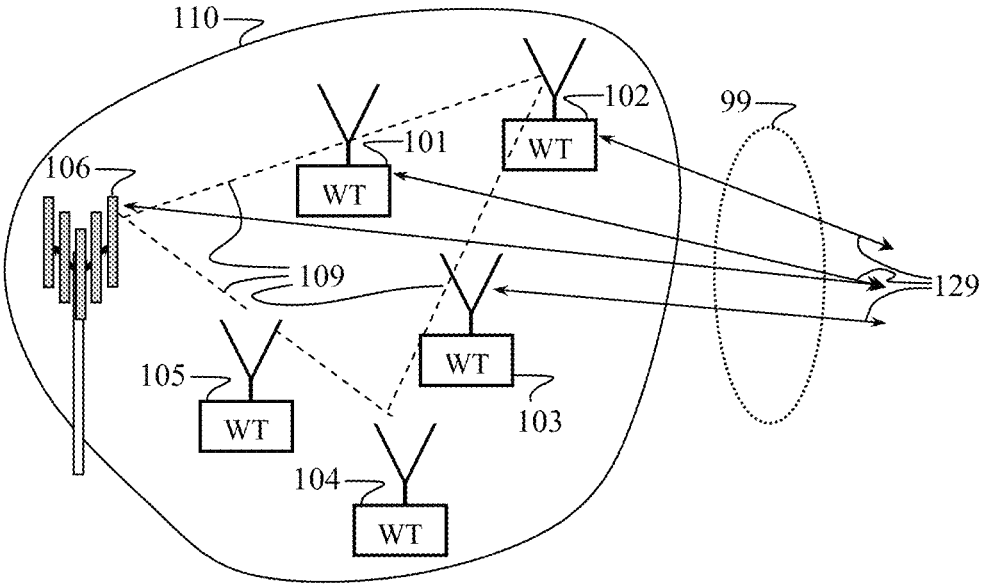

FIGURE 1J

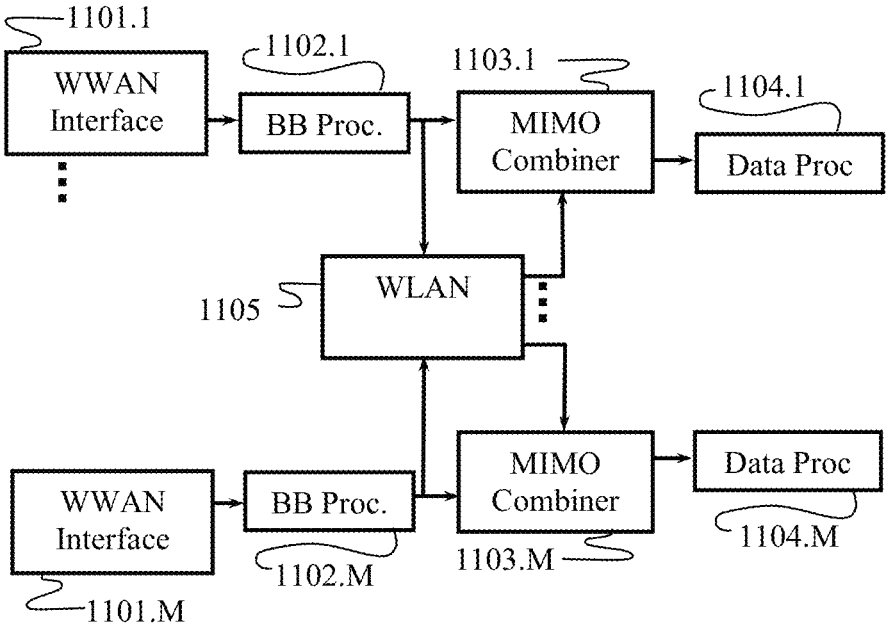

FIGURE 2A

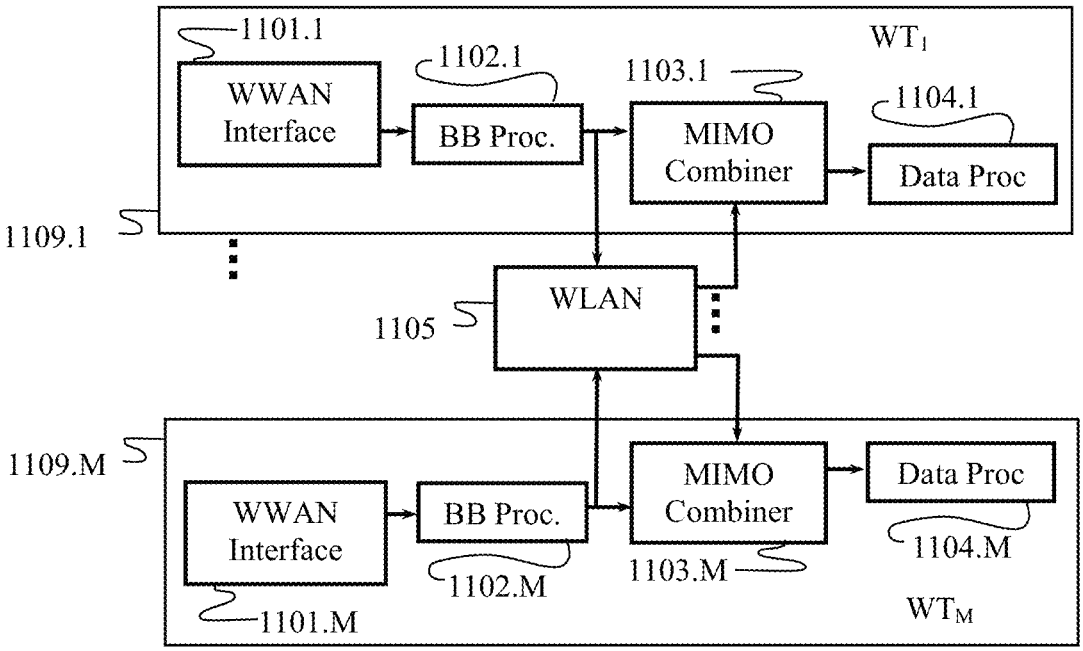

FIGURE 2B

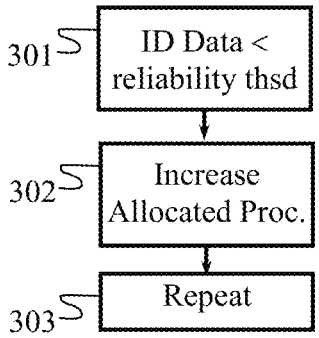

FIGURE 3A

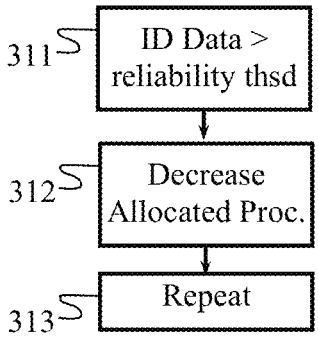

FIGURE 3B

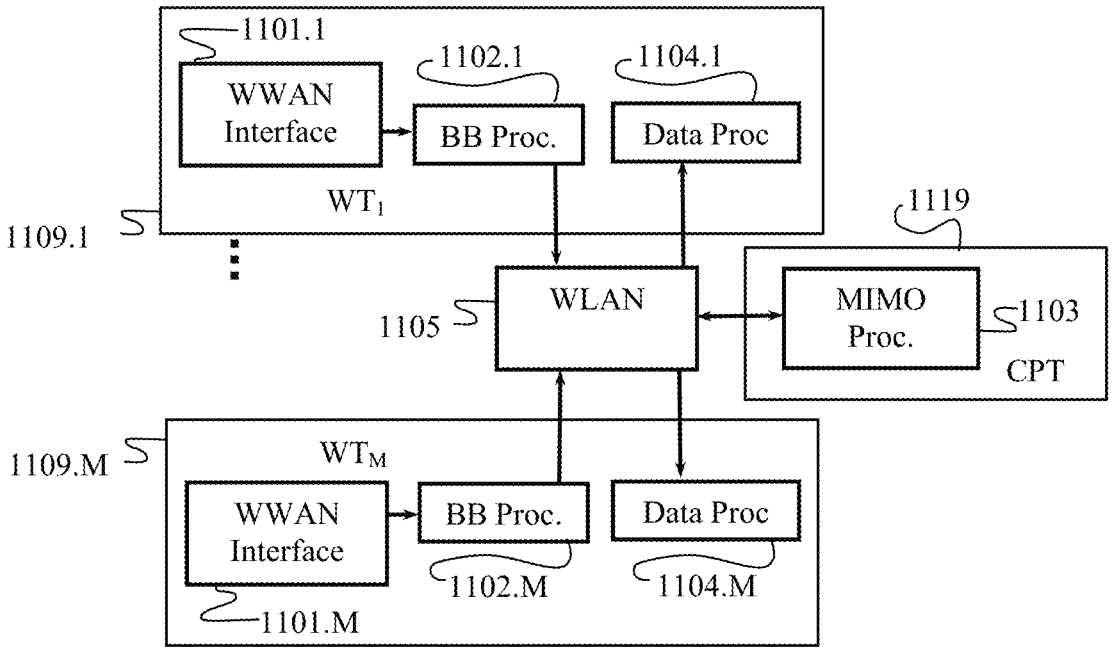

FIGURE 4A

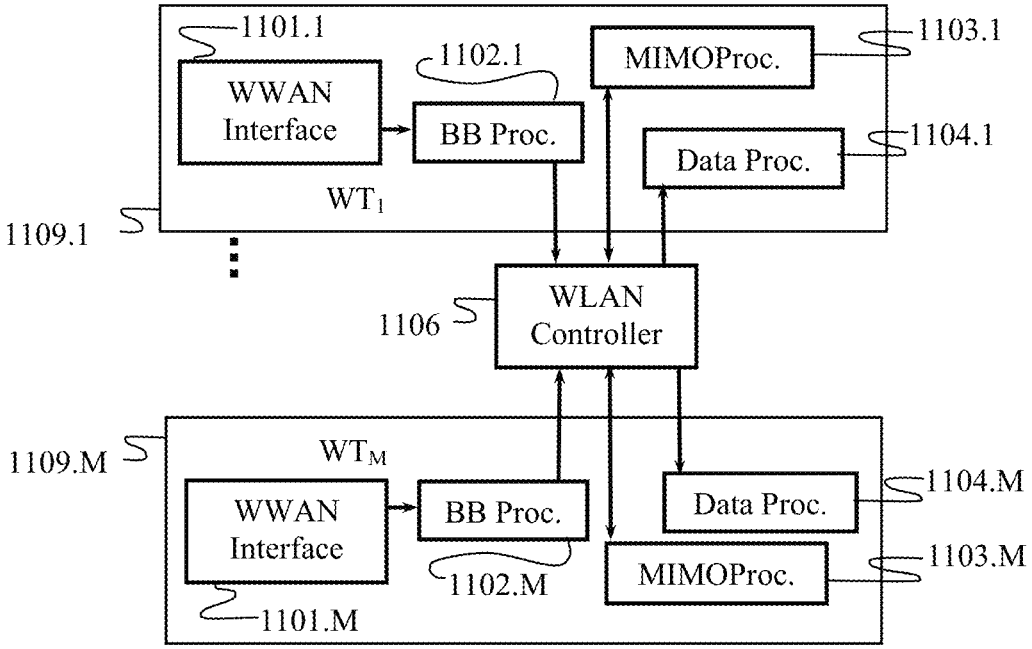

FIGURE 4B

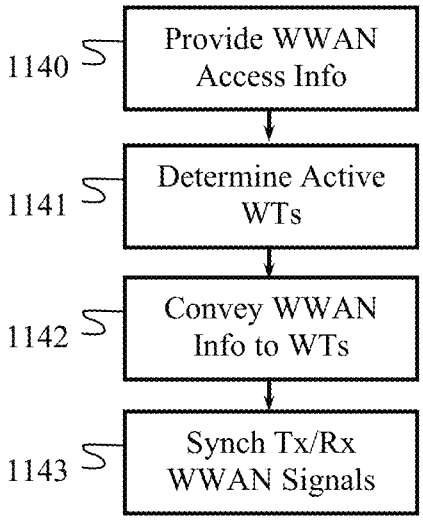

FIGURE 4C

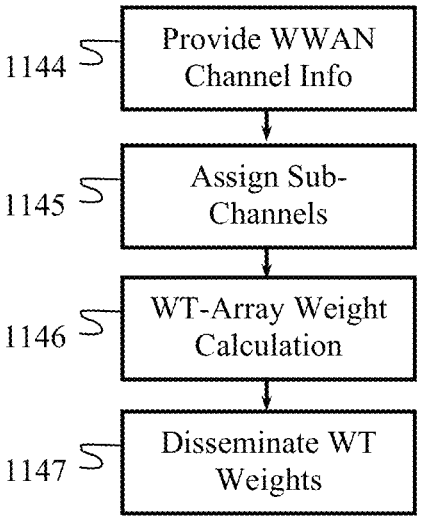

FIGURE 4D

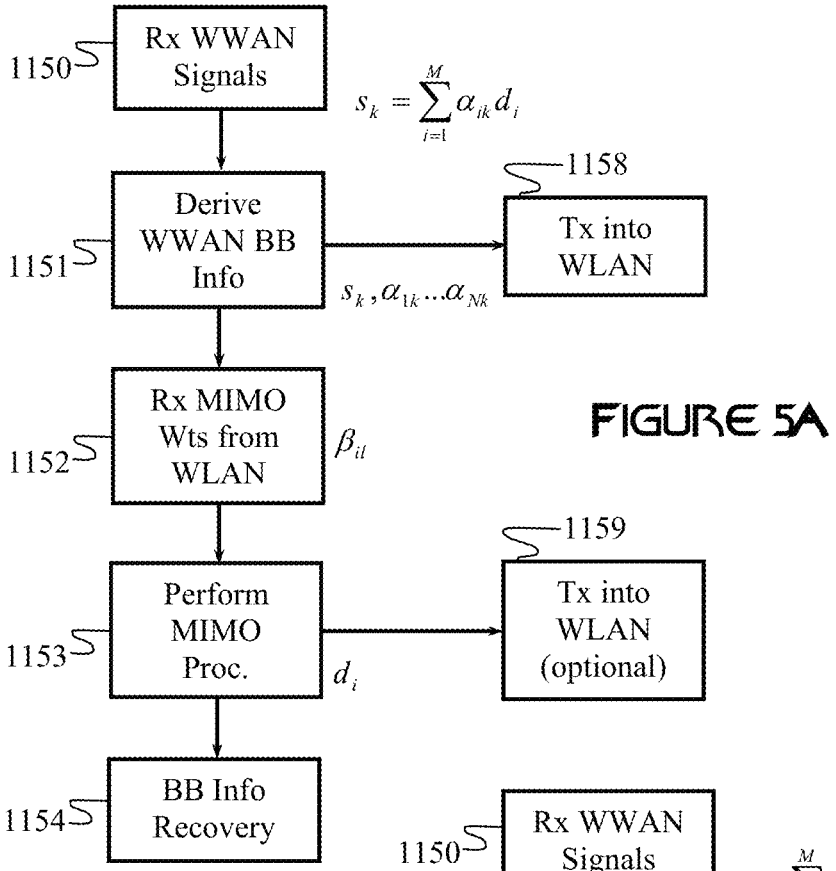

FIGURE 5A

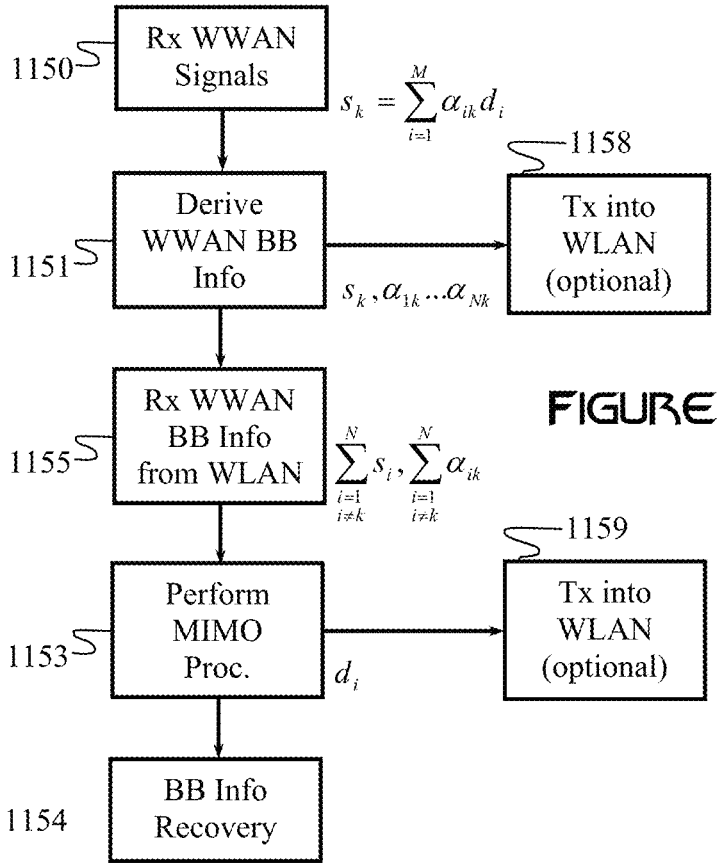

FIGURE 5B

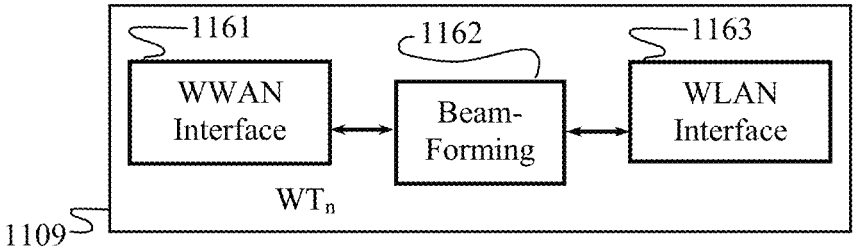

FIGURE 6A

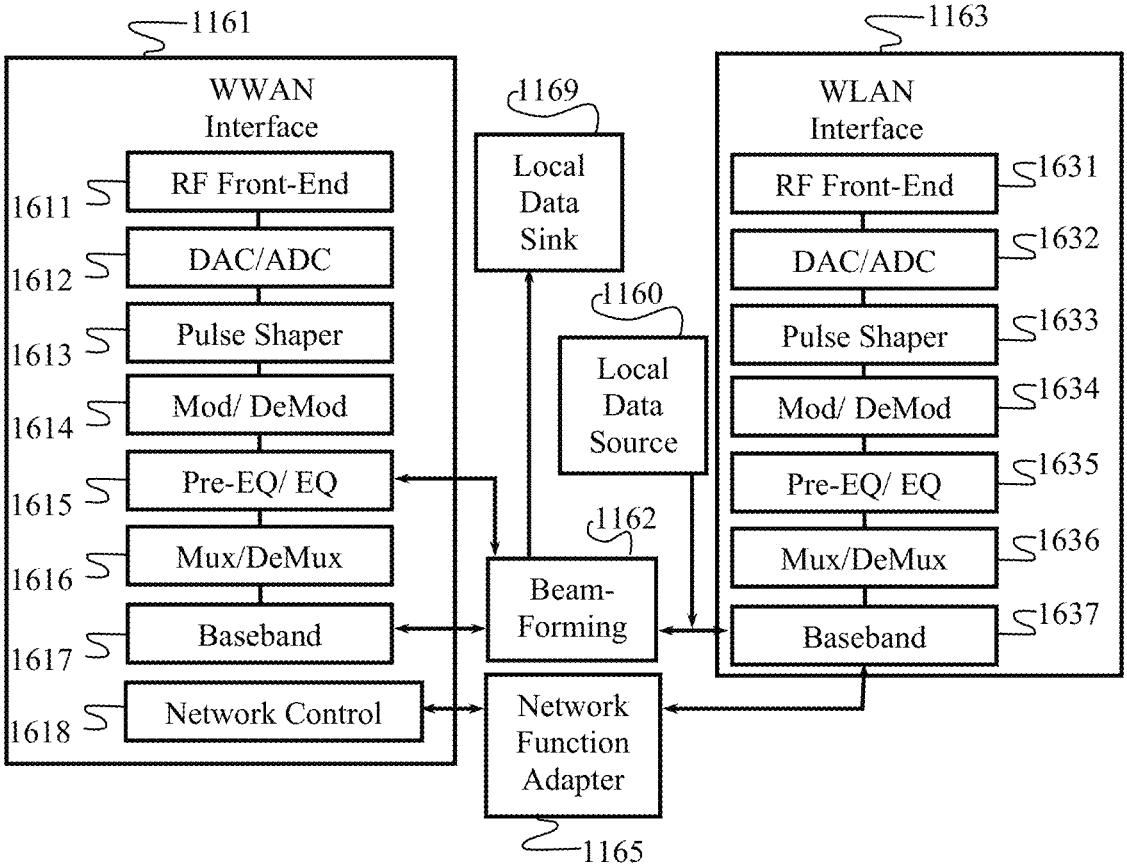

FIGURE 6B

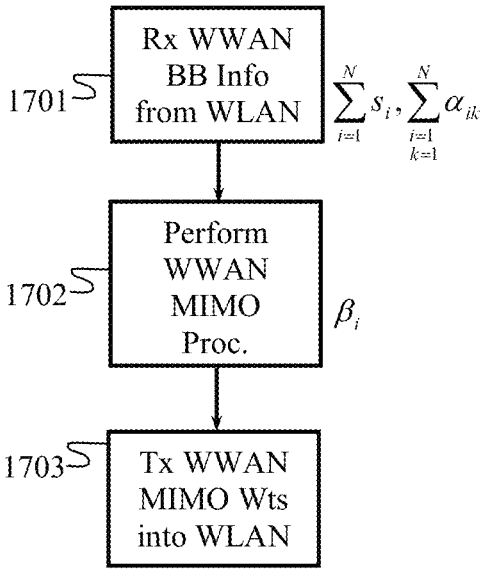

FIGURE 7A

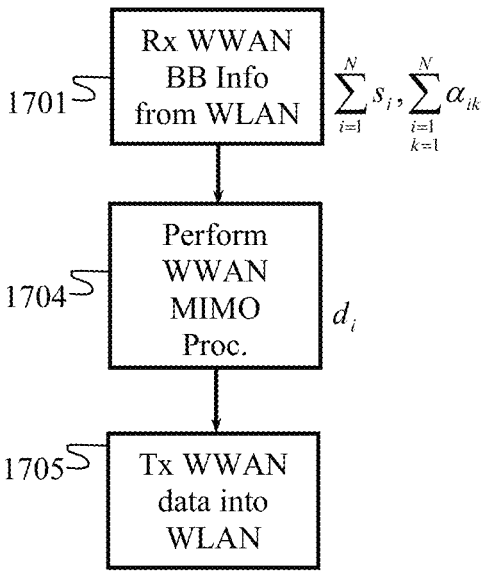

FIGURE 7B

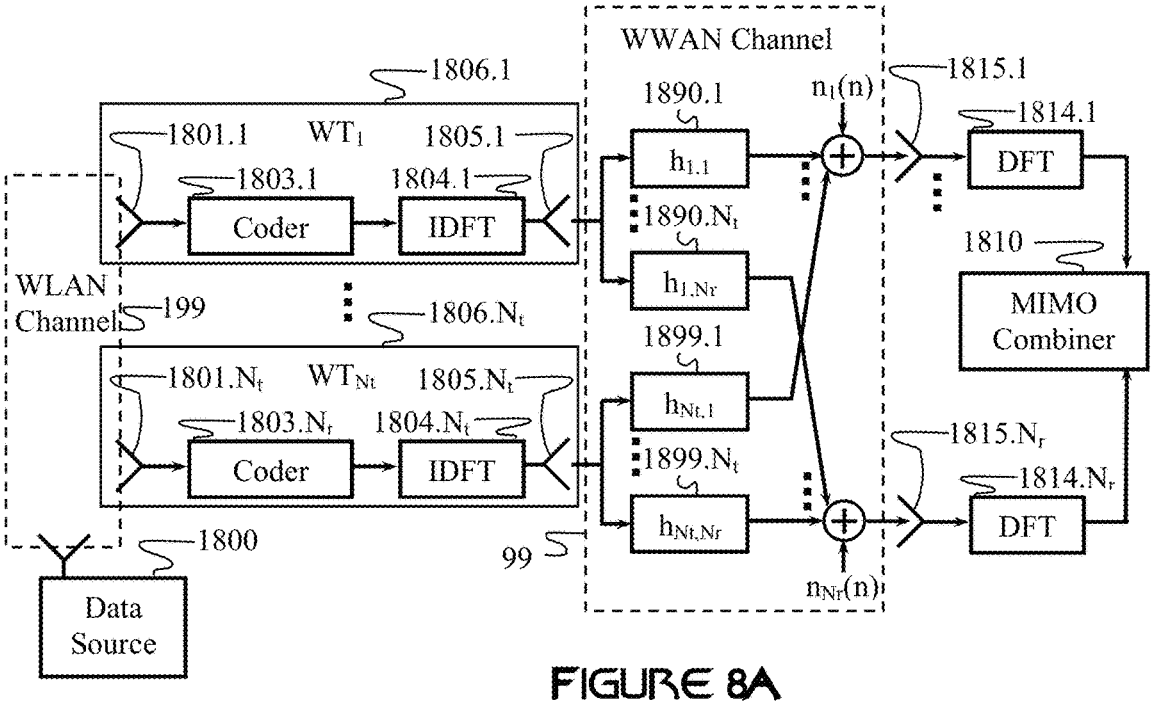

FIGURE 8A

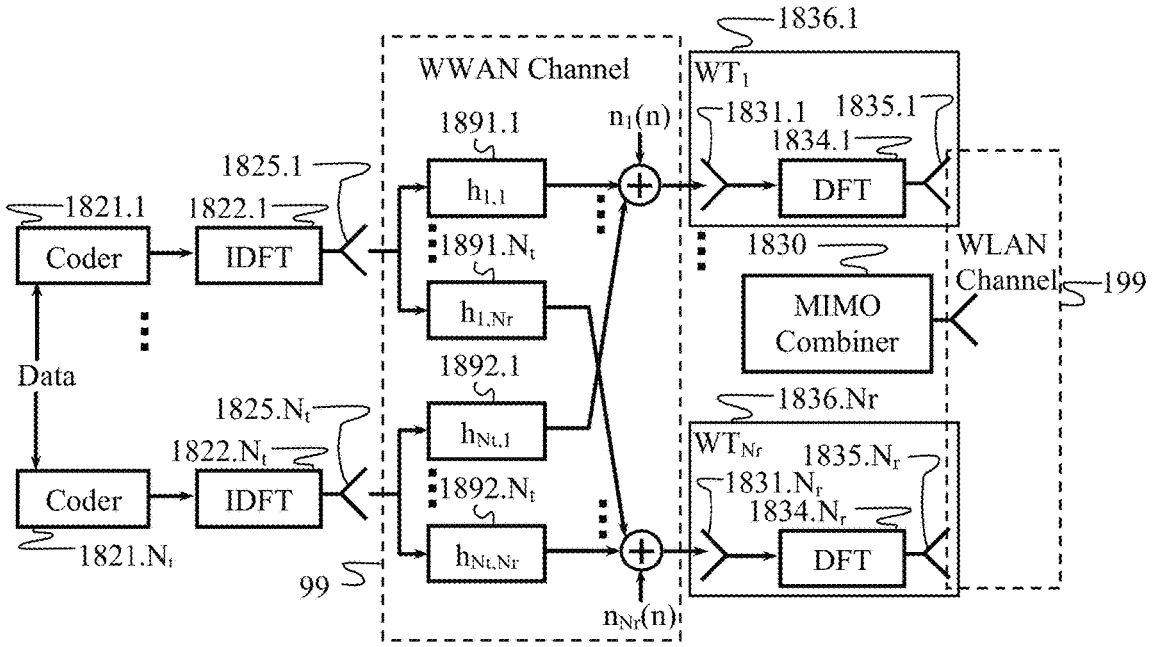

FIGURE 8B

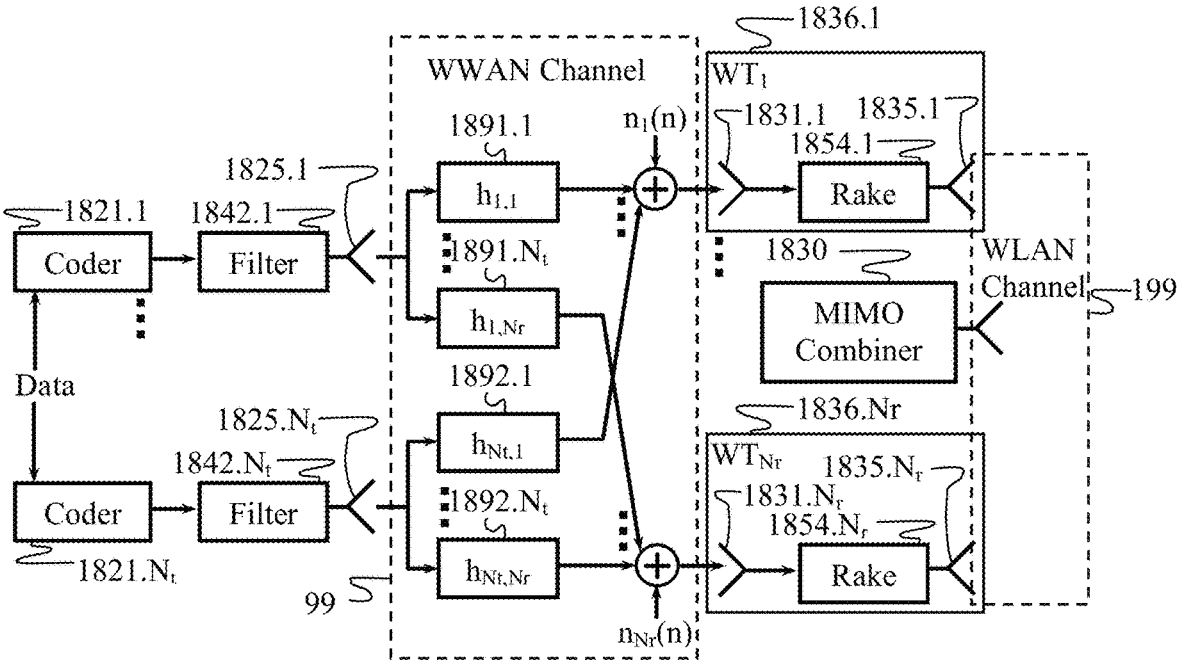
1836.1
WWAN Channel
WT1
1831.1
1835.1
1854.1
1891.1
n1(n)
1825.1
h1,1
Rake
1821.1
1842.1
Coder
Filter
1891.Nt
1830
WLAN
Channel
199
h1,Nr
MIMO
Combiner
Data
1892.1
1836.Nr
1825.Nt
hNt,1
WTNr
1835.Nr
1842.Nt
1831.Nr
Coder
Filter
1892.Nt
1854.Nr
1821.Nt
hNt,Nr
Rake
99
nNr(n)

FIGURE 8C

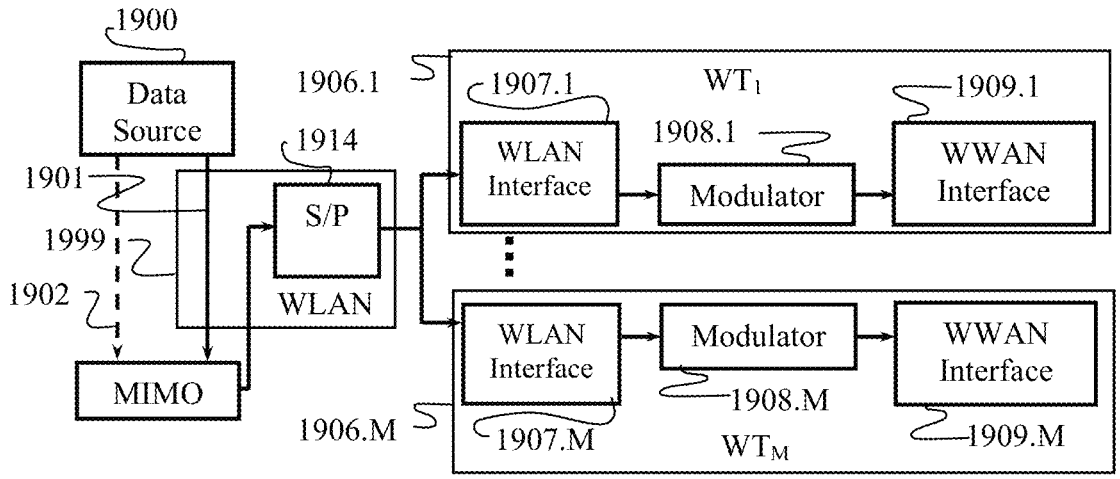

FIGURE 9A

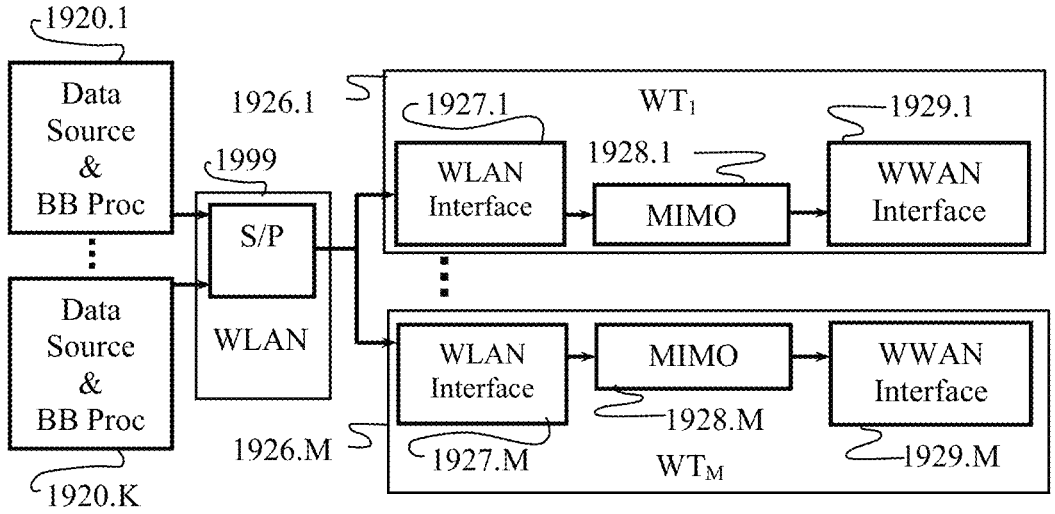

FIGURE 9B

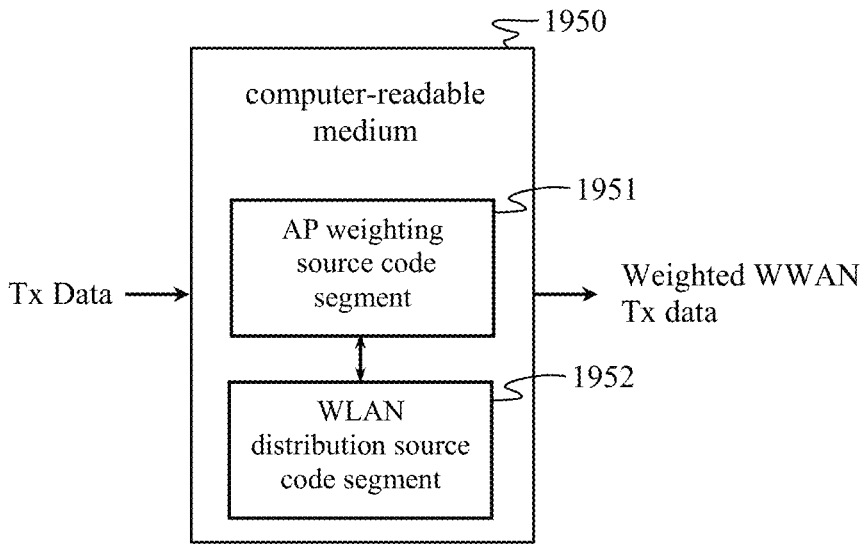

FIGURE 10A

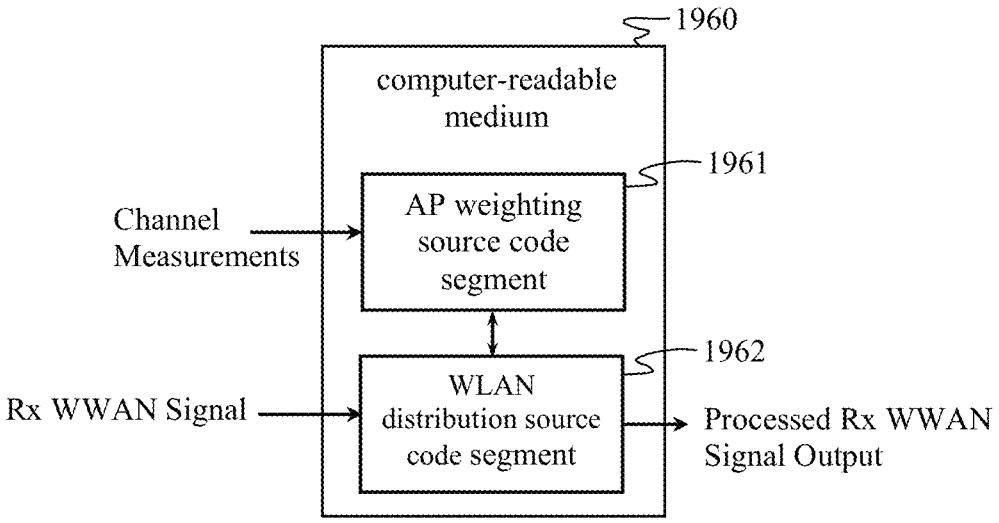

FIGURE 10B

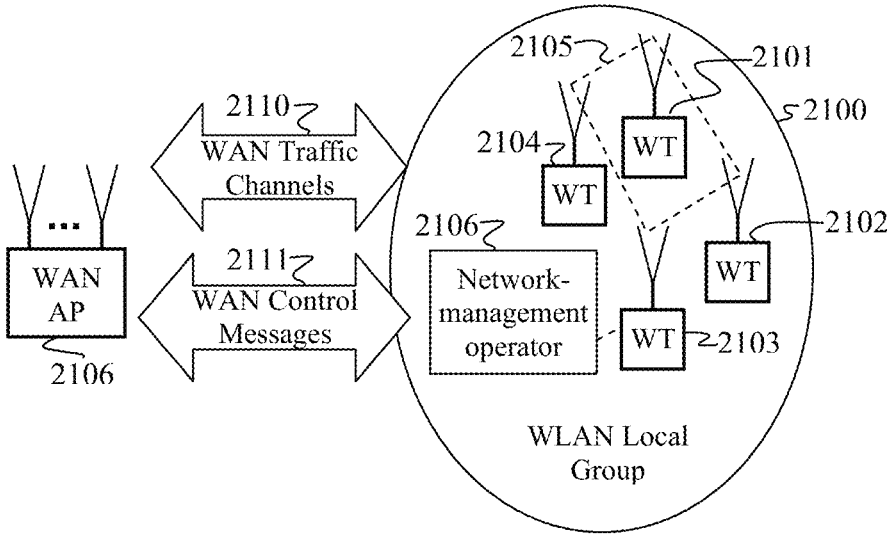
2105
2101
2100
2110
WAN Traffic
Channels
2104
WT
WT
2106
2102
2111
WAN
AP
WAN Control
Messages
Network-
management
operator
WT
WT
2103
2106
WLAN Local
Group

FIGURE 11

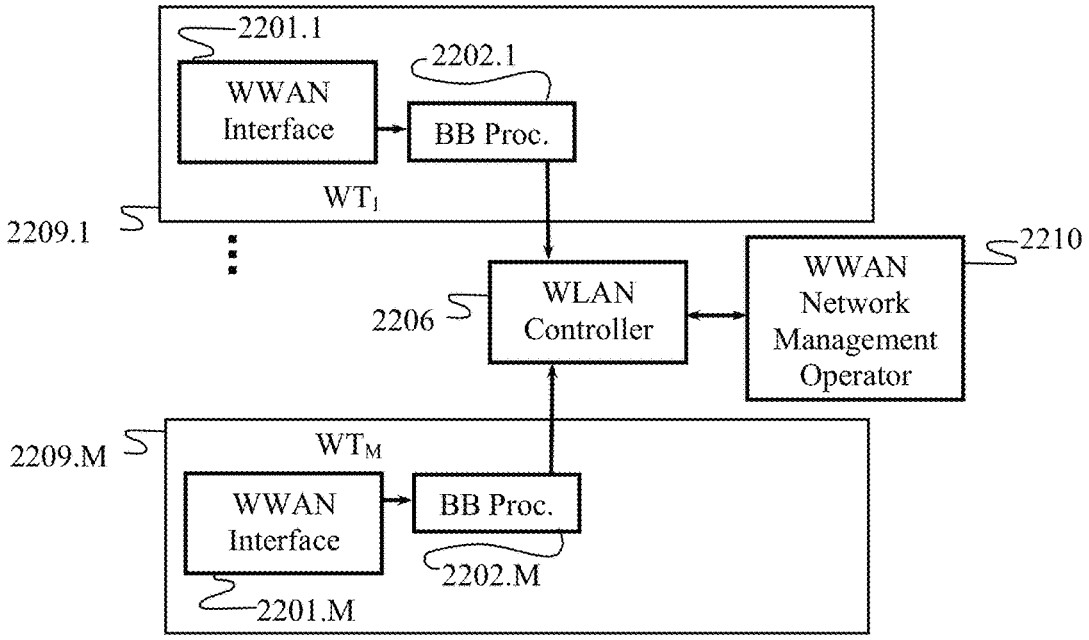

FIGURE 12

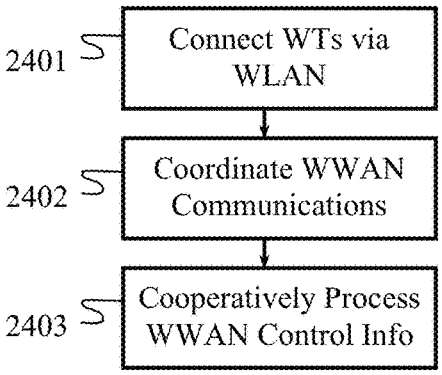

FIGURE 14

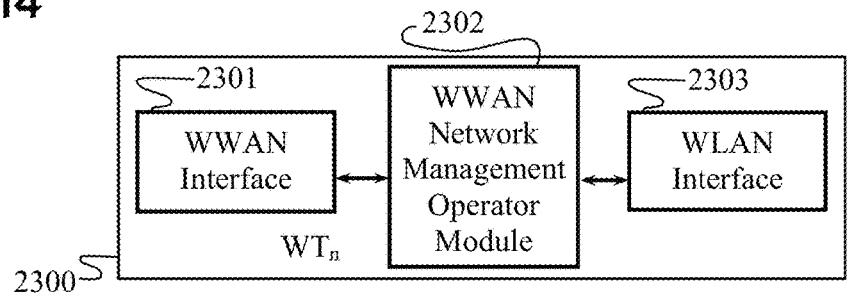

FIGURE 13

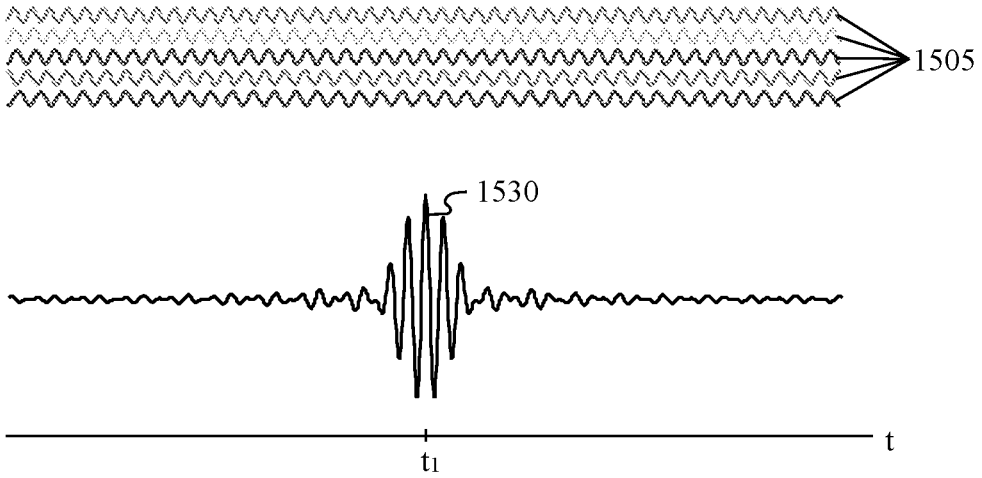

FIGURE 15

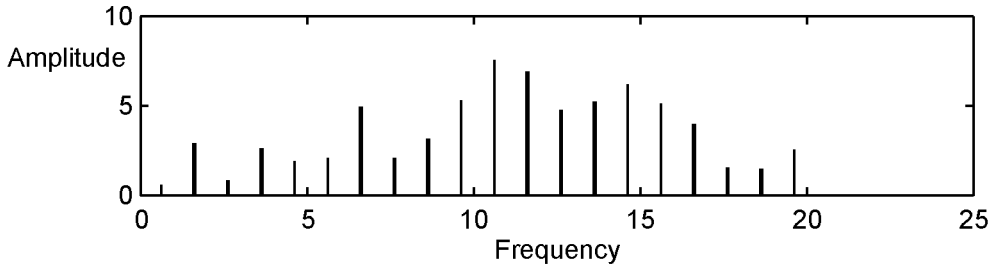

FIGURE 16A

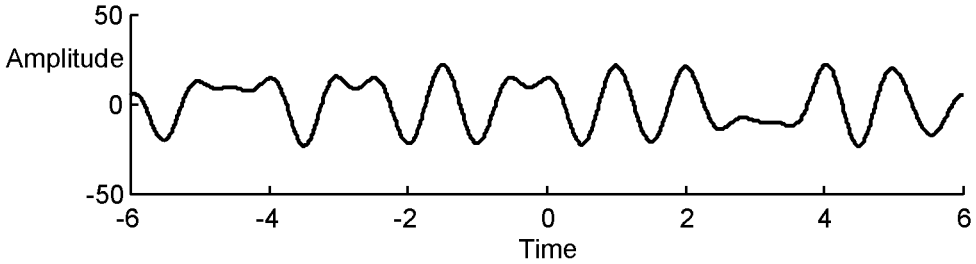

FIGURE 16B

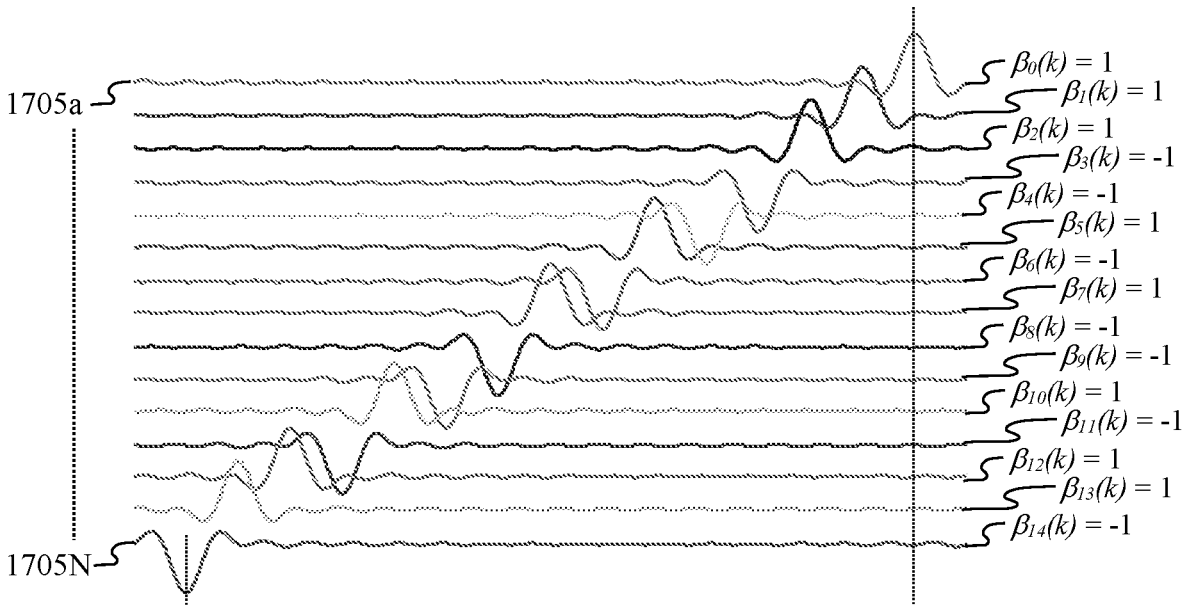

FIGURE 17A

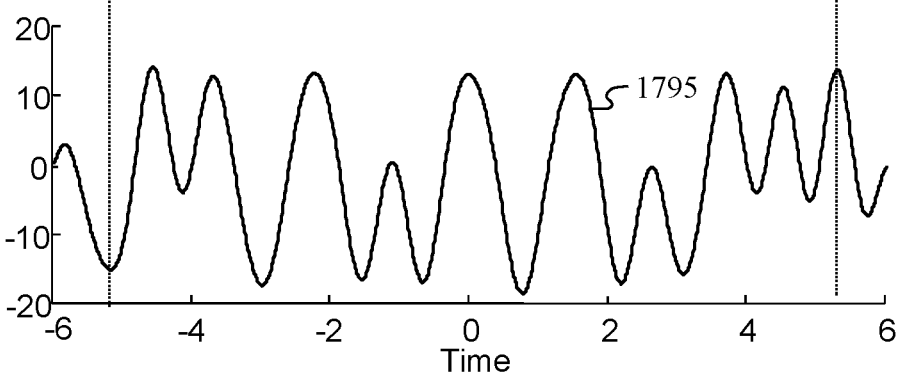

FIGURE 17B

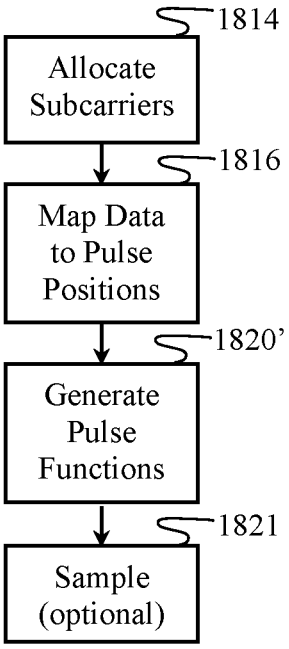

FIGURE 18A

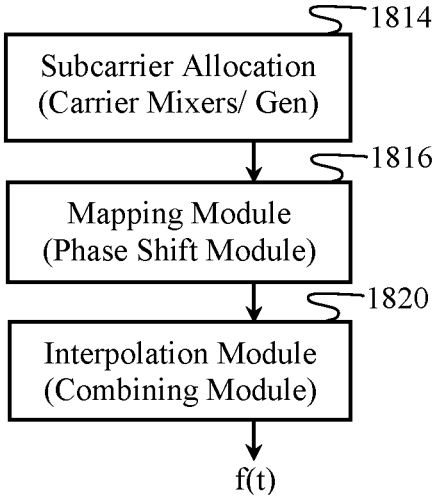

FIGURE 18B

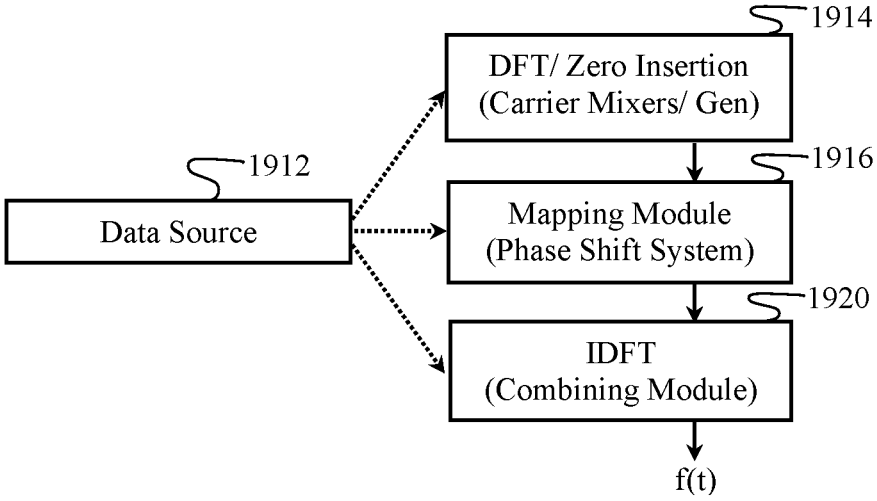

FIGURE 19

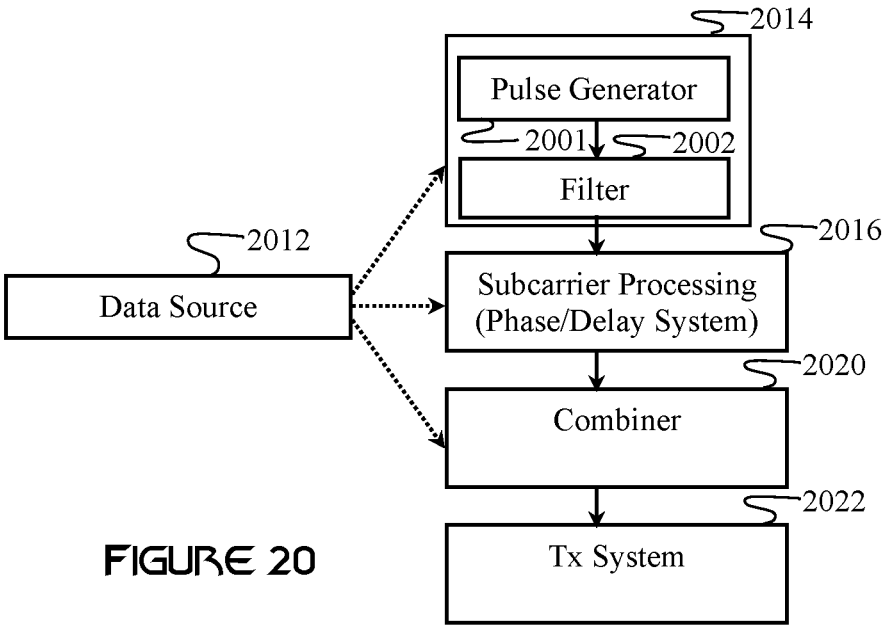

FIGURE 20

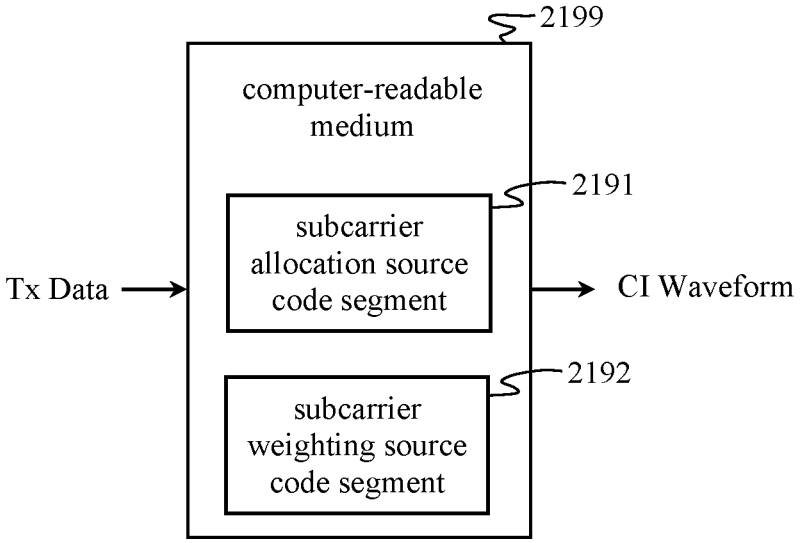

FIGURE 21

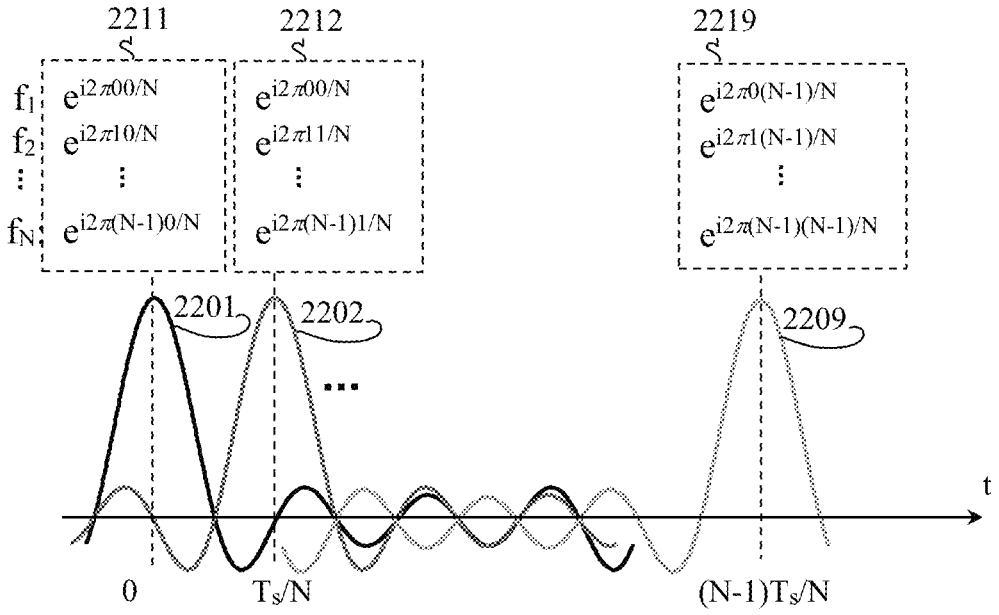

FIGURE 22A

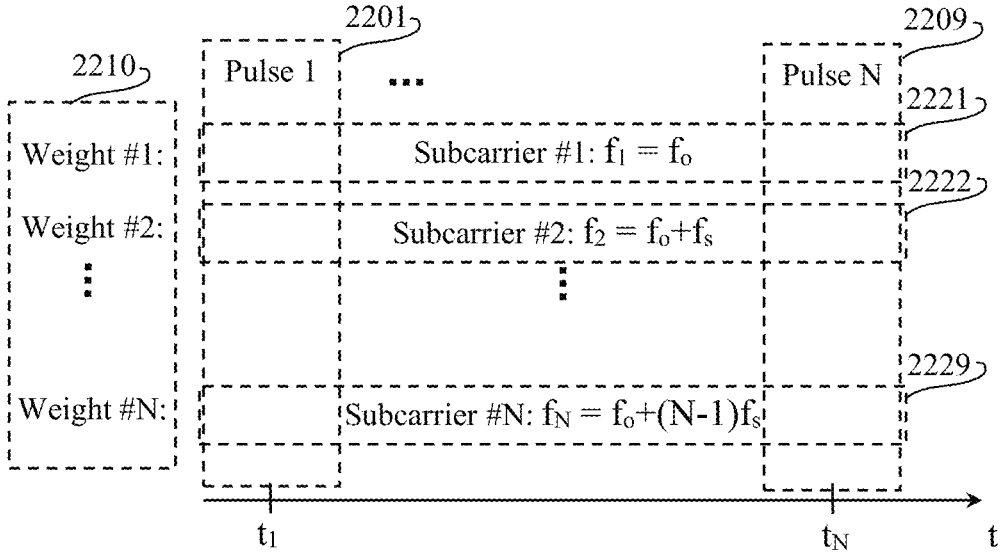

FIGURE 22B

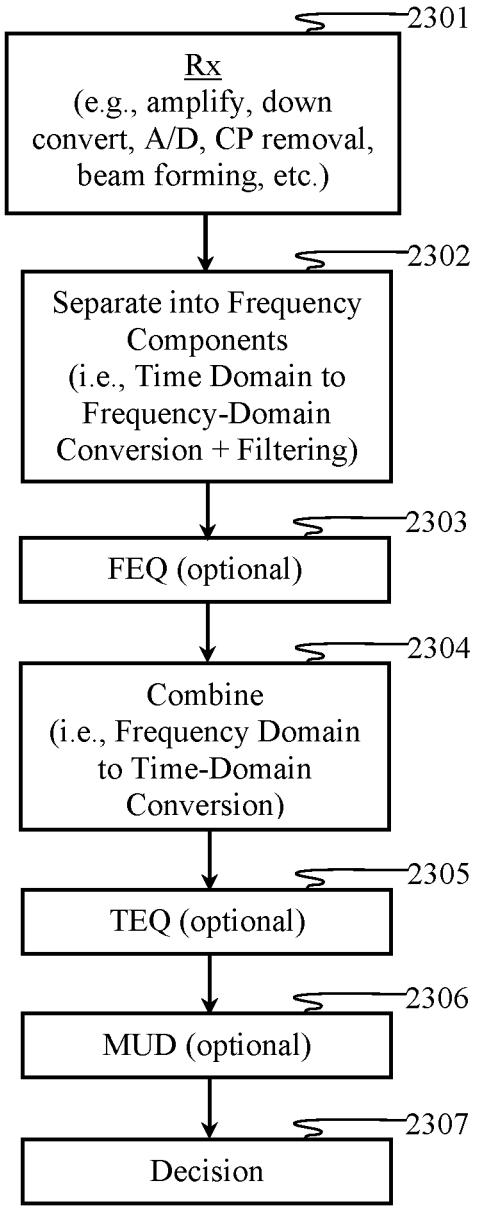

FIGURE 23A

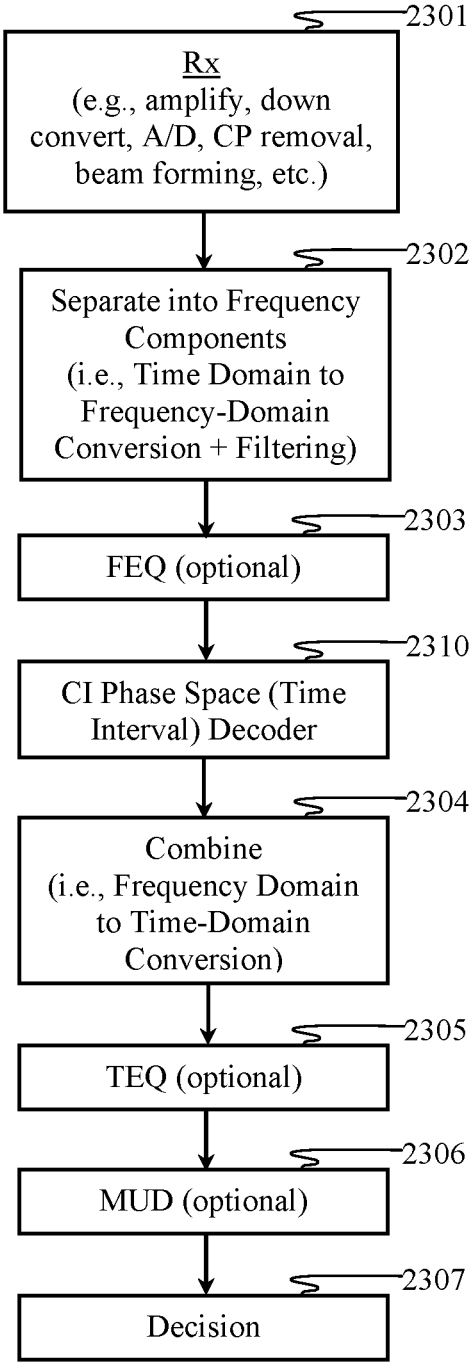

FIGURE 23B

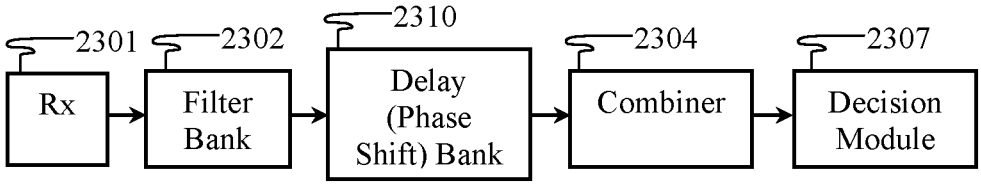

FIGURE 24A

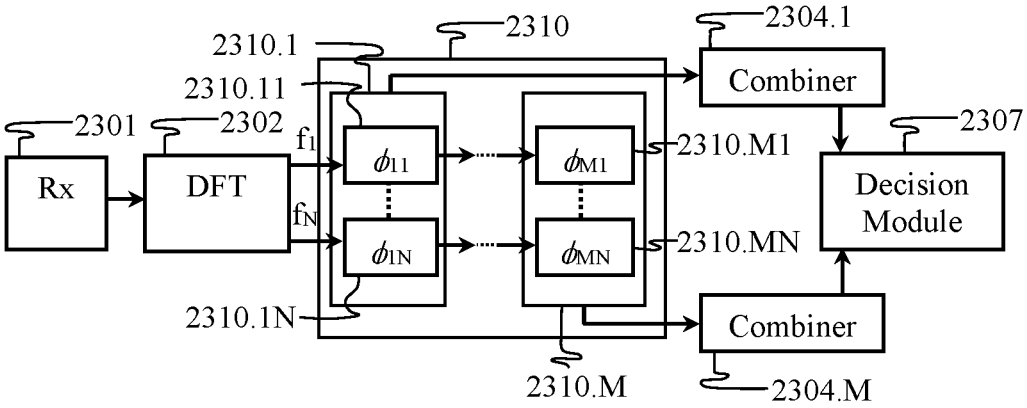

FIGURE 24B

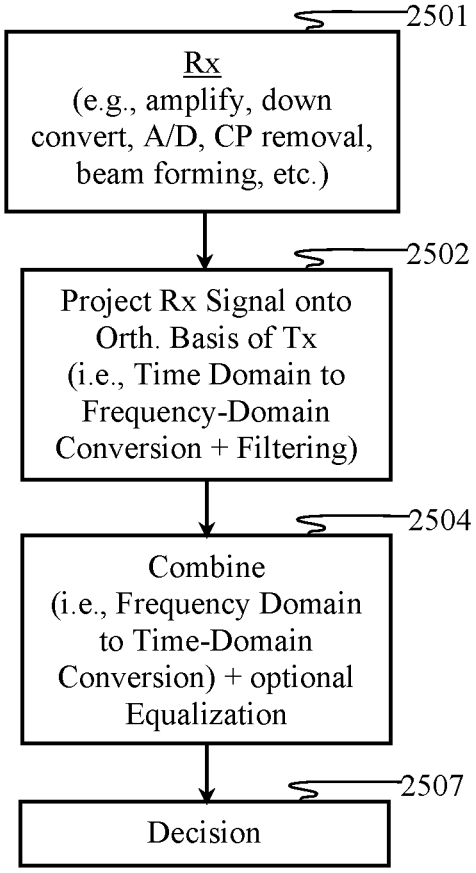

FIGURE 25A

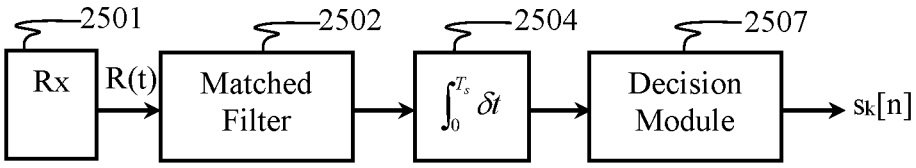

FIGURE 25B

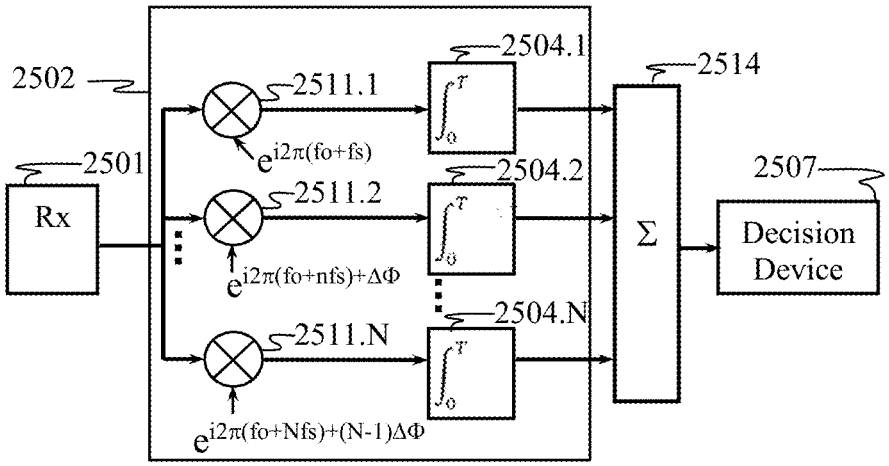

FIGURE 26A

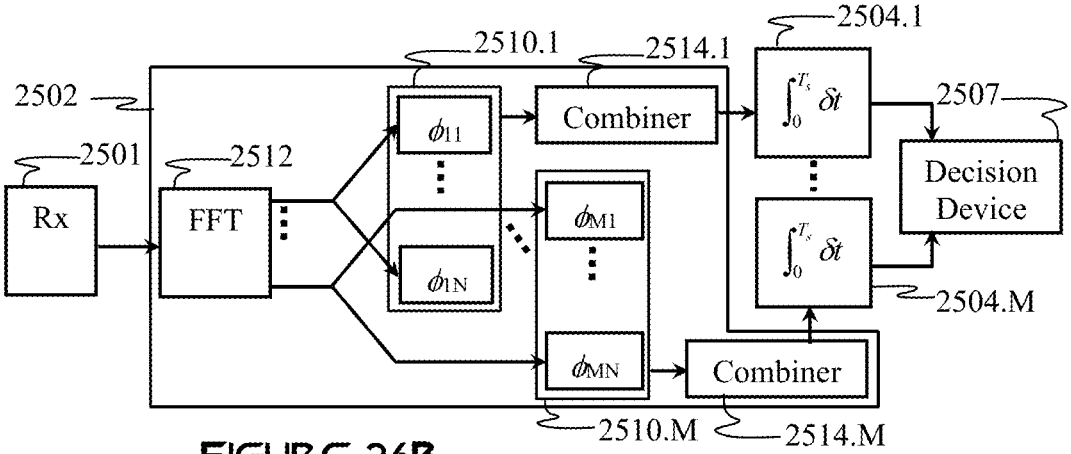

FIGURE 26B

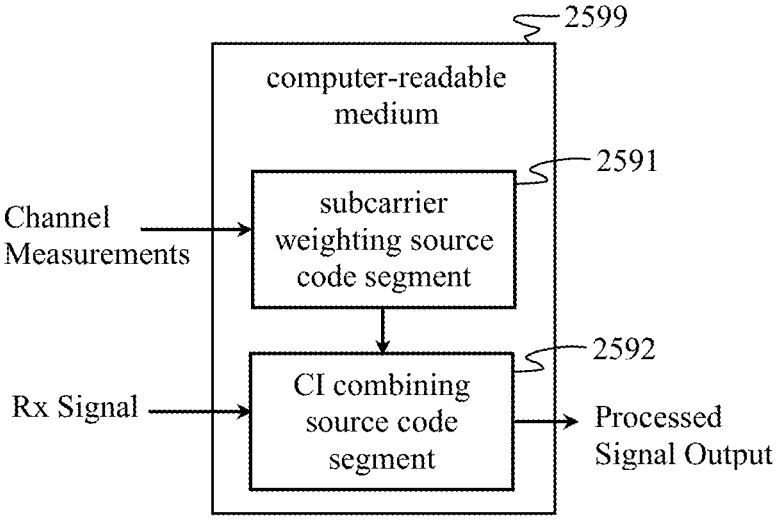

FIGURE 26C

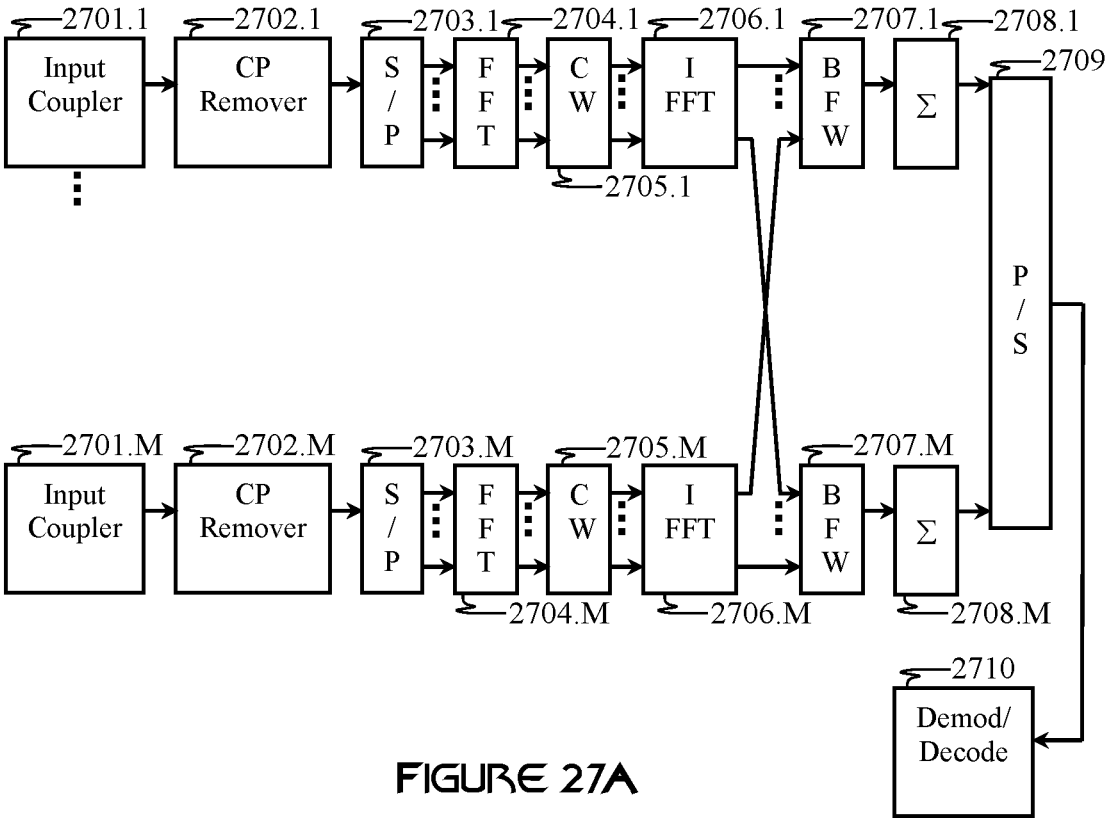

FIGURE 27A

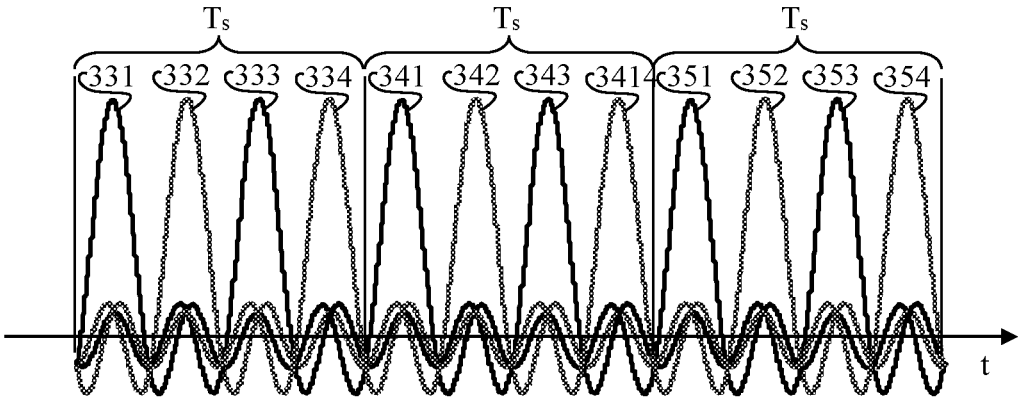

FIGURE 27B

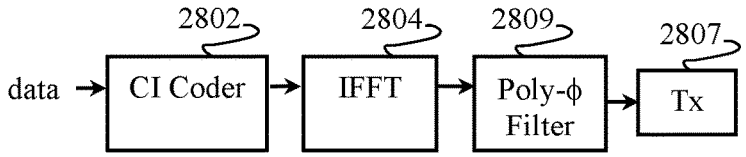

FIGURE 28A

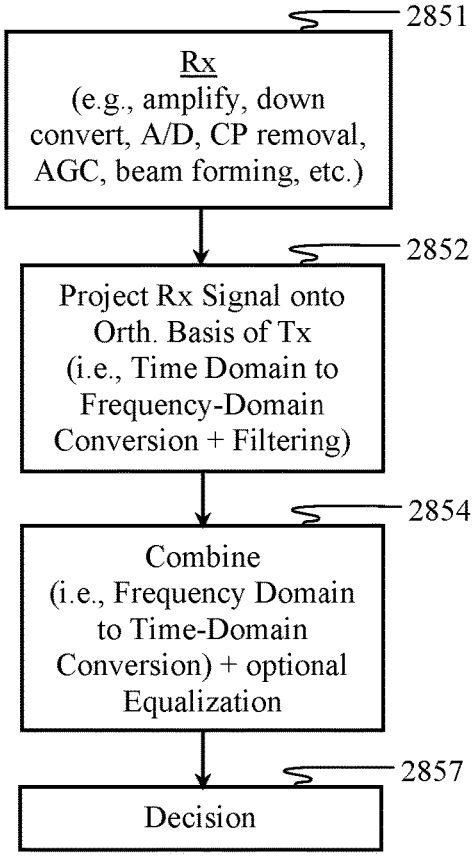

FIGURE 28B

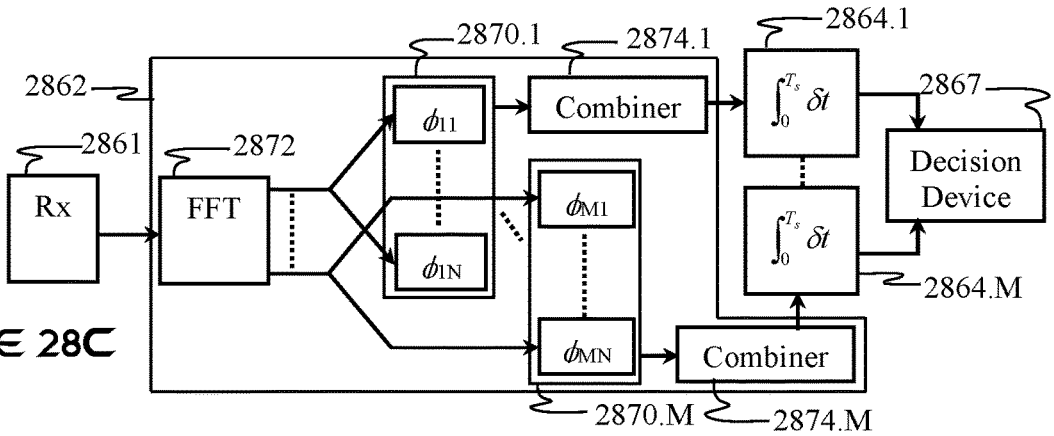

FIGURE 28C

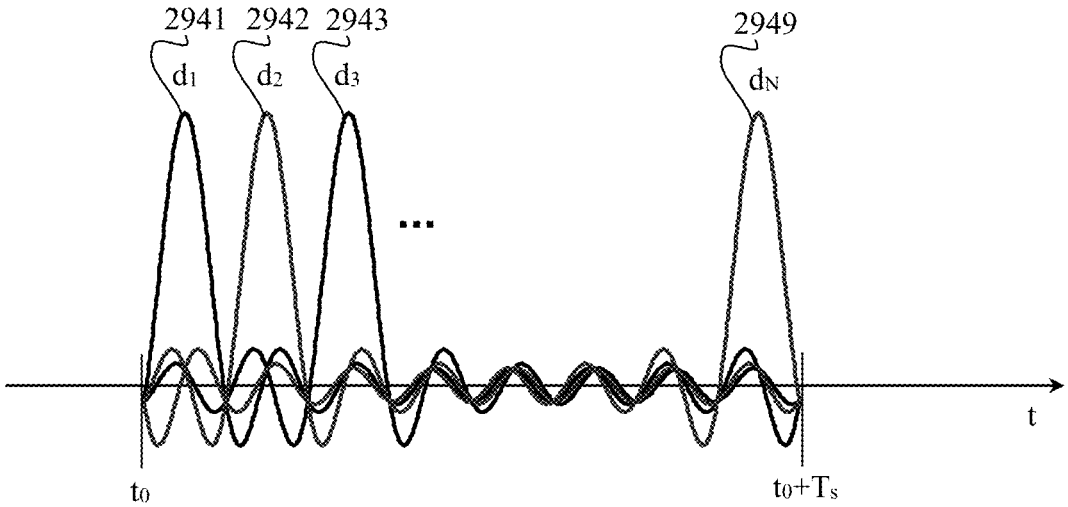

FIGURE 29A

	d_1 ( )	d_2 ( )	d_3 ( )	d_N ( )
$w_1 = \Sigma(\ )$:	$e^{i2\pi(0)(0)/(N)}$	$e^{i2\pi(1)(0)/(N)}$	$e^{i2\pi(2)(0)/(N)}$	$e^{i2\pi(N-1)(0)/(N)}$
$w_2 = \Sigma(\ )$:	$e^{i2\pi(0)(1)/(N)}$	$e^{i2\pi(1)(1)/(N)}$	$e^{i2\pi(2)(1)/(N)}$	$e^{i2\pi(N-1)(1)/(N)}$
$w_3 = \Sigma(\ )$:	$e^{i2\pi(0)(2)/(N)}$	$e^{i2\pi(1)(2)/(N)}$	$e^{i2\pi(2)(2)/(N)}$	$e^{i2\pi(N-1)(2)/(N)}$
		⋮	2951	2953
$w_N = \Sigma(\ )$:	$e^{i2\pi(0)(N-1)/(N)}$	$e^{i2\pi(1)(N-1)/(N)}$	$e^{i2\pi(2)(N-1)/(N)}$	$e^{i2\pi(N-1)(N-1)/(N)}$

FIGURE 29B

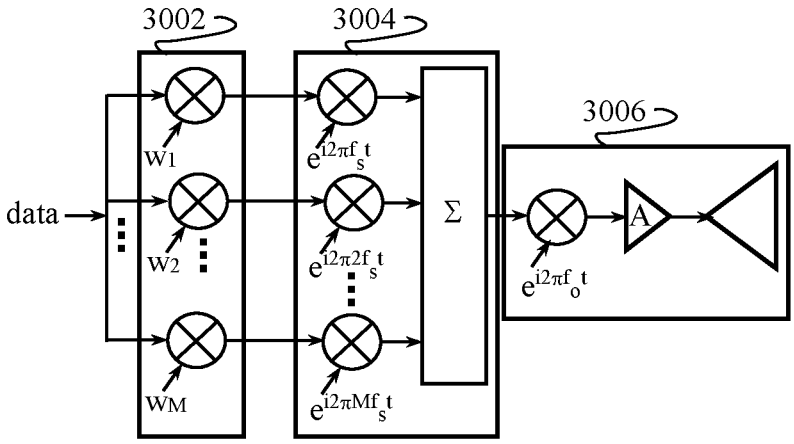

FIGURE 30A

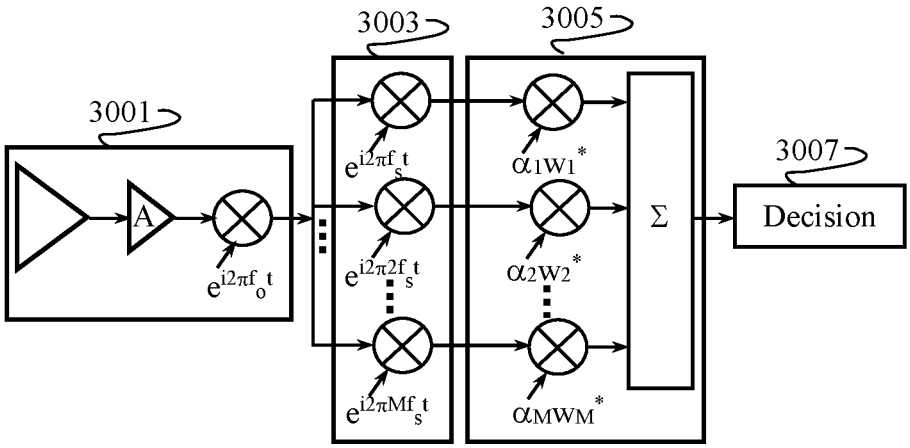

FIGURE 30B

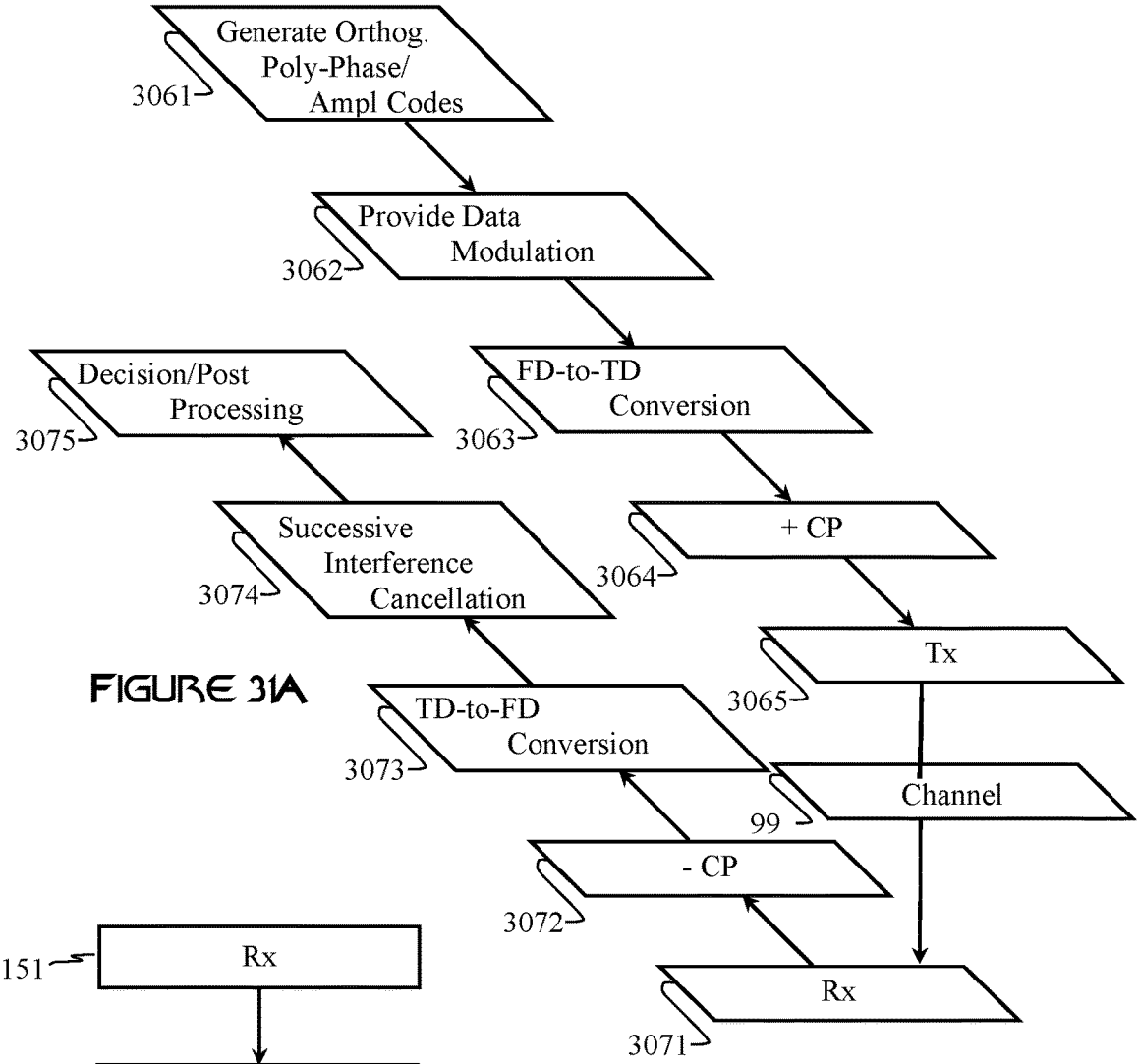

FIGURE 31A

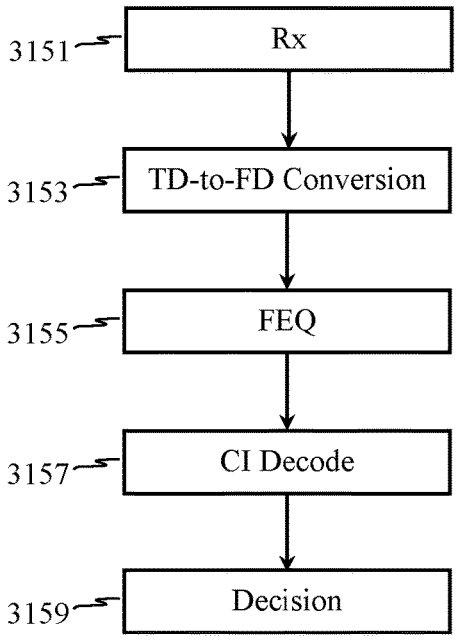

FIGURE 31B

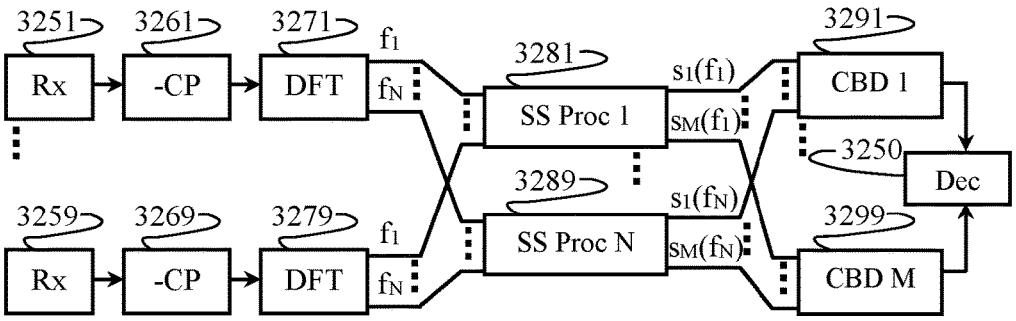

FIGURE 32

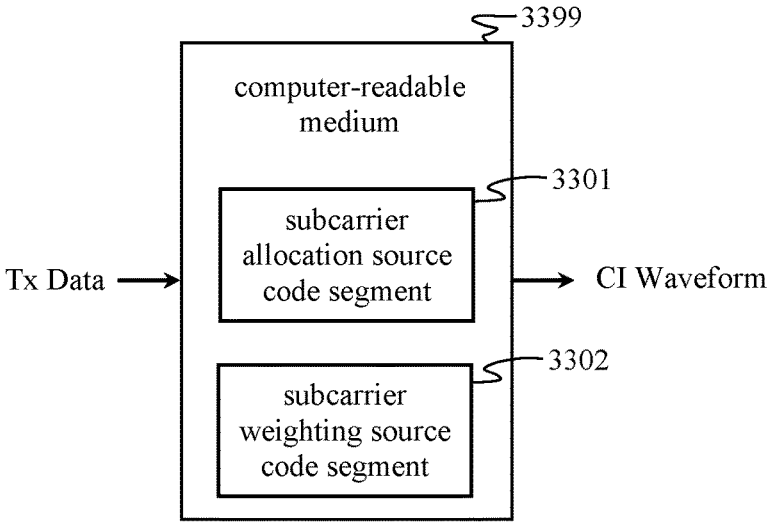

FIGURE 33A

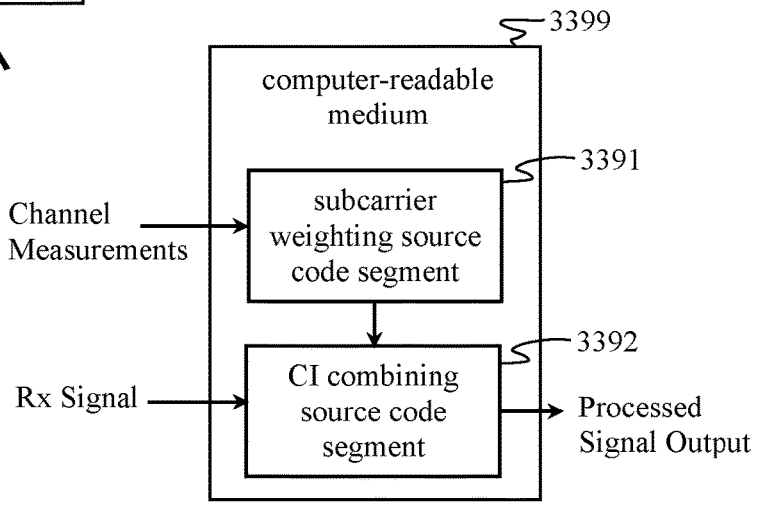

FIGURE 33B

TRANSMIT PRE-CODING

RELATED APPLICATIONS

This application is a Continuation of U.S. patent application Ser. No. 14/727,769, filed Jun. 1, 2015, which is a Continuation of U.S. patent application Ser. No. 14/276,309, filed May 13, 2014, now U.S. Pat. No. 9,048,897, which is a Continuation of U.S. patent application Ser. No. 12/545,572, filed Aug. 21, 2009, now U.S. Pat. No. 8,750,264, which is a Divisional of U.S. patent application Ser. No. 11/187,107, filed on Jul. 22, 2005, now U.S. Pat. No. 8,670,390, which claims priority to Provisional Appl. No. 60/598,187, filed Aug. 2, 2004, all of which are incorporated by reference in their entireties.

BACKGROUND

I. Field

Disclosed aspects relate generally to antenna-array processing and ad-hoc networking, and particularly to providing cooperative signal processing between a plurality of wireless terminal devices, such as to improve network access.

II. Background

Wireless data service is an emerging market with high growth potential. However, market growth requires higher bandwidth and better coverage than cellular technologies can provide. Furthermore, state-of-the-art wireless network technologies are mainly focused on the server side, rather than using mobile wireless terminals to extend the network infrastructure.

A peer-to-peer mode of communication is expected to offer distinct performance benefits over the conventional cellular model, including better spatial-reuse characteristics, lower energy consumption, and extended coverage areas. The key advantage of the peer-to-peer network model is the increase in spatial reuse due to its short-range transmissions. Although peer-to-peer networking shows some promise, there are significant drawbacks that prevent conventional peer-to-peer networks from being a technically and commercially viable solution.

Recent analyses of multi-hop networks compared to cellular networks have indicated that the spatial reuse improvement in the peer-to-peer network model does not translate into greater throughput. Rather, the throughput is lower than that observed in the cellular network model. This observation is explained in three parts:

Multi-hop Routes: Although the spatial reuse is increased, since a flow traverses multiple hops in the peer-to-peer network model, the end-to-end throughput of a flow, while directly proportional to the spatial reuse, is also inversely proportional to the hop-length. Moreover, since the expected hop-length in a dense network is of the order of $O(\sqrt{n})$, a tighter bound on the expected per-flow throughput is $O(1/\sqrt{n})$. While this bound is still higher than that of the dense cellular network model ($O(1/n)$), the following two reasons degrade the performance even more.

Base-Station Bottleneck: The degree of spatial reuse and expected per-flow throughput of the peer-to-peer network model is valid for a network where all flows have destinations within the same cell. In this case, the base station is the destination for all flows (e.g., it is the destination of the wireless path). Thus, any increase in spatial reuse cannot be fully realized as the channel around the base-station becomes a bottleneck and has to be shared by all the flows in the network. Note that this is not an artifact of the single-channel model. As long as the resources around the base-station are shared by all the flows in the network (irrespective of the number of channels), the performance of the flows will be limited to that of the cellular network model.

Protocol Inefficiencies: The protocols used in the cellular network model are both simple and centralized, with the base station performing most of the coordination. Cellular protocols operate over a single hop, leading to very minimal performance degradation because of protocol inefficiencies. However, in the peer-to-peer network model, the protocols (such as IEEE 802.11 and DSR) are distributed, and they operate over multiple hops. The multi-hop path results in more variation in latency, losses, and throughput for TCP. These inefficiencies (which arise because of the distributed operation of the medium access and routing layers) and the multi-hop operation at the transport layer translate into a further degraded performance.

Similarly, antenna-array processing has demonstrated impressive improvements in coverage and spatial reuse. Array-processing systems typically employ multiple antennas at base stations to focus transmitted and received radio energy and thereby improve signal quality. In cellular communications, improvements in signal quality lead to system-wide benefits with respect to coverage, service quality and, ultimately, the economics of cellular service. Furthermore, the implementation of antenna arrays at both ends of a communication link can greatly increase the capacity and performance benefits via Multiple Input Multiple Output (MIMO) processing. However, power, cost, and size constraints typically make the implementation of antenna arrays on mobile wireless terminals, such as handsets or PDAs, impractical.

In cooperative diversity, each wireless terminal is assigned an orthogonal signal space relative to the other terminals for transmission and/or reception. In particular, both multiplexing and multiple access in cooperative diversity are orthogonal. In antenna-array processing, either or both multiplexing and multiple access are non-orthogonal. Specifically, some form of interference cancellation is required to separate signals in an array-processing system because transmitted and/or received information occupies the same signal space.

Applications and embodiments relate to ad-hoc networking and antenna-array processing. Embodiments may address general and/or specific needs that are not adequately serviced by the prior art, including (but not limited to) improving network access (e.g., enhancing range, coverage, throughput, connectivity, and/or reliability). Applications of certain embodiments may include tactical, emergency response, and consumer wireless communications. Due to the breadth and scope of the present invention, embodiments may be provided for achieving a large number of objectives and applications, which are too numerous to list herein. Therefore, only some of the objects and advantages of specific embodiments are discussed in the Summary and in the Detailed Description.

SUMMARY

Some of the exemplary embodiments of the disclosure are summarized as follows. Embodiments include beam-form-

ing systems configured to enable spatially separated wireless terminals (WTs) to perform beam-forming operations in a wireless wide area network (WWAN). A wireless local area network (WLAN) couples together the WTs, which may be configured to share WWAN data, access, and control information. A beam-forming system may comprise the WTs, which function as elements of an antenna array. WWAN network access functions (such as monitoring control channels and exchanging control messages with the WWAN) may be provided in a centralized or a distributed manner with respect to the WTs.

Embodiments also include systems and methods configured for allocating network resources among the WTs, load balancing, distributed computing, antenna-switching diversity, WWAN diversity, interference mitigation, hand off, power control, authentication, session management, ad-hoc network control, error correction coding, and interference mitigation. Other embodiments and variations thereof are described in the Detailed Description.

In one embodiment, a computer program comprises a beam-forming weight calculation source code segment adapted to calculate at least one set of beam-forming weights for signaling between at least one group of WTs and at least one WWAN, and a WLAN information-distribution source code segment adapted to distribute at least one of a set of signals between the at least one group of WTs, the set of signals including a plurality of received WWAN signals, a plurality of WWAN transmission data, and the at least one set of beam-forming weights.

In another embodiment, a computer program comprises a beam-forming weight source code segment adapted to calculate at least one set of beam-forming weights for signaling between at least one group of WTs and at least one WWAN, and a MIMO combining source code segment adapted to combine a plurality of weighted received WWAN signals, at least one of the beam-forming weight source code segment and the MIMO combining source code segment including WLAN information-distribution source code adapted to distribute at least one of a set of signals between the at least one group of wireless terminals, the set of signals including a plurality of received WWAN signals, a plurality of WWAN transmission data, at least one channel estimate, and the at least one set of beam-forming weights.

A receiver embodiment of the invention comprises a plurality of WWAN interfaces, wherein each WWAN interface is adapted to receive at least one transmitted WWAN signal; a plurality of baseband processors wherein each baseband processor is coupled to at least one WWAN interface in the plurality of WWAN interfaces, the plurality of baseband processors adapted to generate a plurality of WWAN baseband signals; at least one WLAN coupled to the plurality of baseband processors; and at least one MIMO combiner adapted to receive at least one WWAN baseband signal from the WLAN, the at least one MIMO combiner adapted to perform MIMO combining of a plurality of WWAN baseband signals.

A transmitter embodiment of the invention comprises a plurality of WWAN interfaces wherein each WWAN interface is adapted to transmit at least one WWAN signal; at least one data source adapted to generate at least one data signal for transmission into at least one WWAN; at least one WLAN adapted to couple the at least one data signal to the plurality of WWAN interfaces for generating a plurality of WWAN data signals; and at least one MIMO processor adapted to generate a plurality of complex weights for weighting the plurality of WWAN data signals.

A wireless terminal according to one aspect of the invention comprises at least one WWAN interface; at least one WLAN interface; and at least one cooperative beam-forming system coupled between the WWAN interface and the WLAN interface and adapted to perform beamforming with information received from the WLAN interface.

Receivers and cancellation systems described herein may be employed in subscriber-side devices (e.g., cellular handsets, wireless modems, and consumer premises equipment) and/or server-side devices (e.g., cellular base stations, wireless access points, wireless routers, wireless relays, and repeaters). Chipsets for subscriber-side and/or server-side devices may be configured to perform at least some of the receiver and/or cancellation functionality of the embodiments described herein.

Additional embodiments, objects, and advantages are described and inferred from the following detailed descriptions and figures. Although particular embodiments are described herein, many variations and permutations of these embodiments fall within the scope and spirit of the invention. Although some benefits and advantages of the preferred embodiments are mentioned, the scope of the invention is not intended to be limited to particular benefits, uses, or objectives. Rather, embodiments of the invention are intended to be broadly applicable to different wireless technologies, system configurations, networks, and transmission protocols, some of which are illustrated by way of example in the figures and in the following detailed description. The detailed description and drawings are merely illustrative of the invention rather than limiting, the scope of the invention being defined by the appended claims and equivalents thereof.

BRIEF DESCRIPTION OF THE DRAWINGS

FIG. **1**A illustrates an application of various embodiments of the invention to a cellular network.

FIG. **1**B illustrates an embodiment of the invention in which transmitted and/or received data between a WLAN group and a WWAN terminal occupies parallel, redundant channels c_n.

FIG. **1**C illustrates an embodiment of the invention in which a WLAN group comprising a plurality of Wireless Terminals (WTs) is adapted to communicate with at least one WWAN node.

FIG. **1**D illustrates an embodiment of the invention in which communications between a WWAN node and a plurality of WTs are characterized by different, yet complementary, code spaces c_1, c_2, and c_3.

FIG. **1**E illustrates an embodiment of the invention in which a first WLAN group is adapted to communicate with a second WLAN group via at least one WWAN channel or network.

FIG. **1**F shows an embodiment of the invention wherein a WLAN group includes a plurality of WWAN-active WTs and at least one WWAN-inactive WT.

FIG. **1**G illustrates a cooperative beam-forming embodiment of the invention that functions in the presence of a desired WWAN terminal and a jamming source.

FIG. **1**H illustrates a cooperative beam-forming embodiment of the invention that functions in the presence of a plurality of desired WWAN terminals.

FIG. **1**I illustrates an embodiment of the invention adapted to provide a plurality of WTs in a WLAN group with access to a plurality of WWAN services.

FIG. 1J illustrates an embodiment of the invention in which a WLAN group includes at least one WWAN terminal.

FIG. 2A illustrates a functional receiver embodiment of the invention that may be realized in both method and apparatus embodiments.

FIG. 2B illustrates a functional receiver embodiment of the invention that may be realized in both method and apparatus embodiments.

FIG. 3A illustrates an embodiment of the invention in which a WLAN controller for a WLAN group allocates processing resources based on WWAN-link performance.

FIG. 3B illustrates an alternative embodiment of the invention in which a WLAN controller for a WLAN group allocates processing resources based on WWAN-link performance.

FIG. 4A illustrates a MIMO receiver embodiment of the invention.

FIG. 4B illustrates a functional embodiment of the invention in which MIMO processing operations are distributed over two or more WTs.

FIG. 4C illustrates a functional embodiment of the invention for transmission and reception of WWAN signals in a distributed network of WTs.

FIG. 4D illustrates a functional embodiment of the invention adapted to perform cooperative beamforming.

FIG. 5A illustrates a receiver embodiment of the invention that may be implemented by hardware and/or software.

FIG. 5B illustrates an alternative receiver embodiment of the invention.

FIG. 6A illustrates functional and apparatus embodiments of the present invention pertaining to one or more WTs coupled to at least one WWAN and at least one WLAN.

FIG. 6B illustrates a preferred embodiment of the invention that may be employed as either or both apparatus and functional embodiments of one or more WTs.

FIG. 7A illustrates a functional embodiment of the invention related to calculating MIMO weights in a cooperative-beamforming network.

FIG. 7B illustrates a functional embodiment of the invention adapted to calculate transmitted data symbols received by a cooperative-beamforming network.

FIG. 8A illustrates a preferred transmitter embodiment of the invention.

FIG. 8B illustrates a preferred receiver embodiment of the invention.

FIG. 8C illustrates an embodiment of the invention in which a plurality of WTs is adapted to perform time-domain processing.

FIG. 9A illustrates an optional transmission embodiment of the present invention.

FIG. 9B illustrates a functional flow chart that pertains to transmitter apparatus and method embodiments of the invention.

FIG. 10A illustrates software components of a transmission embodiment of the invention residing on a computer-readable memory.

FIG. 10B illustrates software components of a receiver embodiment of the invention residing on a computer-readable memory.

FIG. 11 shows a WWAN comprising a WWAN access point (e.g., a base station) and a local group comprising a plurality of wireless terminals communicatively coupled together via a WLAN. A network-management operator is configured to handle WWAN-control operations within the local group.

FIG. 12 is a block diagram of a communication system comprising a WLAN for communicatively coupling a plurality of mobile wireless terminals to a WLAN controller, and a network-management operator for cooperatively processing WWAN-control messages for the mobile wireless terminals.

FIG. 13 is a block diagram of a mobile wireless terminal in accordance with an aspect of the invention in which a WWAN network management operator module is communicatively coupled to at least one other mobile wireless terminal via a WLAN and communicatively coupled to the WWAN.

FIG. 14 illustrates a method in accordance with an aspect of the invention in which WWAN communications for a group of wireless terminals are cooperatively processed.

FIG. 15 is a plot of a plurality of CI carriers and a superposition of the carriers.

FIG. 16A is a plot of the relative frequency-versus-amplitude profile of a plurality of CI carriers that are combined to produce a time-domain pulse train, such as a DS-CDMA chip sequence.

FIG. 16B is a time-domain representation of a modulated pulse train produced by providing time offsets to a plurality of modulated pulses, or equivalently, from a superposition of the CI carriers represented in FIG. 2A.

FIG. 17A illustrates a plurality of CI pulse waveforms modulated with code and/or information symbols .beta..sub.n and positioned orthogonally in time.

FIG. 17B illustrates a CI pulse train of orthogonally time-offset pulses.

FIG. 18A illustrates CI signal generation.

FIG. 18B illustrates a CI transmitter.

FIGS. 19 and 20 each illustrates a system and method of generating CI signals.

FIG. 21 illustrates basic components of CI signal generation software residing on a computer-readable medium.

FIG. 22A is a time-domain plot of a plurality of pulses generated from a superposition of equally spaced carriers, and shows a set of carrier phases corresponding to each of the pulses.

FIG. 22B represents basic components and characteristics of a CI waveform.

FIG. 23A is a functional flow chart of a CI receiver.

FIG. 23B illustrates a CI receiver method and apparatus including a phase-space decoder.

FIG. 24A shows an embodiment of a CI receiver.

FIG. 24B shows an alternative embodiment of a CI receiver.

FIG. 25A illustrates an aspect of a CI reception method and apparatus.

FIG. 25B illustrates a CI receiver method and system of the present invention.

FIG. 26A illustrates a CI receiver apparatus and method of the invention.

FIG. 26B is a flow diagram for a receiver that receives a CI signal and samples the signal in multiple phase spaces.

FIG. 26C illustrates basic components of a computer program on a computer-readable medium adapted to control a receiver and optimize performance.

FIG. 27A illustrates a CI receiver configured as a multi-element receiver. Such receiver configurations may be employed in multiple-input, multiple-output (MIMO) communications.

FIG. 27B illustrates three pulse-waveform blocks wherein each block includes four pulse waveforms of duration T.sub.s.

FIG. **28**A illustrates a CI transmitter.

FIG. **28**B illustrates a CI reception method and apparatus.

FIG. **28**C shows a CI receiver adapted to project a received signal onto at least one orthonormal basis, such as an orthonormal basis corresponding to at least one transmitted signal.

FIG. **29**A illustrates a block waveform including a set of orthogonal CI pulse waveforms.

FIG. **29**B illustrates a method for generating sub-carrier weights from a set of data symbols and a CI code matrix.

FIG. **30**A illustrates a transmitter apparatus and method configured to generate multiple transmission waveforms.

FIG. **30**B shows a receiver apparatus and method adapted to process a wide range of single-carrier and/or multi-carrier transmissions.

FIG. **31**A illustrates a communication method.

FIG. **31**B shows CI processing of received single-carrier and/or multi-carrier signals.

FIG. **32** illustrates a sub-space/sub-carrier processor receiver.

FIG. **33**A illustrates basic components of CI signal generation software residing on a computer-readable medium.

FIG. **33**B illustrates basic components of CI receiver software residing on a computer-readable medium.

DETAILED DESCRIPTION

While the invention is susceptible to various modifications and alternative forms, specific embodiments thereof are shown by way of example in the drawings and are herein described in detail. It should be understood, however, that the exemplary embodiments are not intended to limit the invention to the particular forms disclosed. Instead, the invention is to cover all modifications, equivalents, and alternatives falling within the spirit and scope of the invention as defined by the claims.

FIG. **1**A illustrates how some embodiments of the invention may be employed in a cellular network. Each wireless terminal (WT) of a plurality of WTs **101-103** is in radio contact with at least one wireless wide area network (WWAN) terminal, which may also be referred to as a WWAN node, such as cellular base station **119**. The cellular base station **119** may include one or more antennas (e.g., an antenna array). WWAN signals transmitted between the base station **119** and the WTs **101-103** propagate through a WWAN channel **99**, which is typically characterized by AWGN, multipath effects, and may include external interference.

The WTs **101-103** represent a wireless local area network (WLAN) group **110** (or local group) if they are currently connected or are capable of being connected via a WLAN **109**. Accordingly, the WTs may be adapted to connect to at least one WWAN and to at least one WLAN. The WLAN group **110** may consist of two or more WTs in close enough proximity to each other to maintain WLAN communications. A given WWAN may include one or more WLAN groups, such as WLAN group **110**.

In an exemplary embodiment of the present invention, the WTs **101-103** may be configured to transmit data $d_t(n)$ over a WWAN channel to the base station **119**. The WTs **101-103** may also be configured to receive data $d_r(n)$ on a WWAN channel from the base station **119**. The received data $d_r(n)$ is shared by the WTs **101-103** via the WLAN **109**. Similarly, the transmitted data $d_t(n)$ may be distributed to the WTs **101-103** via the WLAN **109**. The WLAN **109** typically comprises the wireless-communication resource between the WTs **101-103** and the associated physical-layer interface hardware. The WLAN **109** is differentiated from a WWAN by its relatively shorter range. For example, a Bluetooth or UWB system functioning within an IEEE 802.11 network would be referred to as a WLAN, whereas the 802.11 network would be referred to as a WWAN. A WLAN may operate in a different frequency band than the WWAN. Alternatively, other orthogonalizing techniques may be employed for separating WLAN and WWAN signals from each other. WLANs and WWANs, as defined herein, may employ any type of free-space transmissions, including, but not limited to, ultra-low frequency, RF, microwave, infrared, optical, and acoustic transmissions. WLANs and WWANs may employ any type of transmission modality, including, but not limited to, wideband, UWB, spread-spectrum, multi-band, narrowband, or dynamic-spectrum communications.

The WLAN **109** may also comprise the WLAN network-control functionality commonly associated with a WLAN, and the WWAN-access control functionality required to distribute necessary WWAN-access parameters (e.g., node addresses, multiple-access codes, channel assignments, authentication codes, etc.) between active WTs **101-103**. The distribution of WWAN-access parameters between multiple WTs **101-103** enables each WT **101-103** to be responsive to transmissions intended for a particular WT in the local group and/or it enables a plurality of WTs **101-103** to function as a single WT when transmitting signals into the WWAN channel **99**.

Particular embodiments of the invention provide for adapting either or both the transmitted data $d_t(n)$ and the received data $d_r(n)$ in order to perform beamforming. Specifically, the group of WTs **110** may be adapted to perform antenna-array processing by linking the individual WTs together via WLAN links **109** and employing appropriate antenna-array processing on the transmitted and/or the received data, $d_t(n)$ and $d_r(n)$, respectively.

Ad-hoc wireless networks (e.g., multi-hop and peer-to-peer networks) may employ intermediate relay nodes to convey transmissions from a source to a destination. Relays reduce the transmission power requirements for sending information over a given distance. This indirectly increases the spatial-reuse factor, thus enhancing system-wide bandwidth efficiency. For this reason, ad-hoc wireless networking works particularly well with unlicensed spectrum, which is characterized by restrictive power limitations and high path loss compared to cellular bands. Similarly, for certain embodiments of the invention, it may be preferable to employ high-loss (e.g., high-frequency) channels for the WLAN connections **109**.

The capacity of wireless ad-hoc networks is constrained by interference caused by the neighboring nodes, such as shown in P. Gupta and P. R. Kumar, "The Capacity of Wireless Networks," IEEE Trans. Info. Theory, vol. IT-46, no. 2, March 2000, pp. 388-404 and in A. Agarwal and P. R. Kumar, "Improved capacity bounds for wireless networks." Wireless Communications and Mobile Computing, vol. 4, pp. 251-261, 2004, both of which are incorporated by reference herein. Using directional antennas (such as antenna arrays) reduces the interference area caused by each node, which increases the capacity of the network. However, the use of directional antennas and antenna arrays on the WTs **101-103** is often not feasible, especially when there are size constraints, power restrictions, cost constraints, and/or mobility needs. Thus, some embodiments of the present invention may provide for enabling WTs to form groups that cooperate in network-access functions. This provides each member of a given WLAN group with greater network access, as well as other benefits.

Antenna-array processing is generally categorized as multiple-input, single-output (MISO), single-input, multiple-output (SIMO) or multiple input, multiple output (MIMO). Array processing often employs beam forming in at least one predetermined signal space or signal sub-space. For example, phased-array processing involves coherent beamforming of at least one transmitted signal frequency. Sub-space processing often employs some form of baseband interference cancellation or multi-user detection. Other variations of phased-array and sub-space processing also exist and may be implemented in embodiments of the present invention.

Sub-space processing is commonly employed via space-time processing (e.g., Rake receivers are employed in a frequency-selective channel) and/or space-frequency processing (e.g., frequency-domain processing is employed to provide for multiple flat-fading channels). Similarly, sub-space processing may employ other diversity parameters and combinations thereof, including (but not limited to) polarization processing and code-space processing.

MIMO systems have been shown to significantly increase the bandwidth efficiency while retaining the same transmit power budget and bit-error-rate (BER) performance relative to a single input, single output (SISO) system. Similarly, for a given throughput requirement, MIMO systems require less transmission power than SISO systems. MIMO technology is useful for enabling exceptionally high bandwidth efficiency. However, many spatial-multiplexing techniques require rich scattering. Increased path loss and poor scattering are major problems for MIMO systems operating above 2.4 GHz. For these reasons, lower (e.g., cellular) frequencies are often preferred for MIMO applications. However, some MIMO benefits can also be achieved at higher frequencies.

FIG. **1**B illustrates an embodiment of the present invention in which transmitted and/or received data between the WLAN group **110** and the WWAN terminal **119** occupies parallel, redundant channels c_n. This approach is distinct from typical cooperative-diversity implementations in which WWAN data transmissions are conveyed over a plurality of orthogonal channels. Rather, each of the WTs **101-103** transmits and/or receives on a common channel c_n. This enables many well-known types of array processing to be performed.

The WLAN group **110** may function as either or both a transmitting array and a receiving array. The signal received at an antenna array is a noisy superposition of the n transmitted signals:

$$y(n) = \sqrt{\frac{E_s}{M_t}}\, Hs(n) + v(n)$$

where $\{s(n)\}_{n=0}^{N-1}$ is a sequence of transmitted vectors, E_s corresponds to the transmit energy assuming that $E_{sn\|Sn\|}=1$ for n=1, . . . , M_t, v(n) represents AWGN with zero mean and variance, and H is an $M_r \times M_t$ matrix channel (where M_r is the number of receiver elements and M_t is the number of transmitter elements), which is assumed constant over N symbol periods. The nominal rank of a rational matrix H is the order of the largest minor of H that is not identically zero, such as shown in T. Kailath, Linear Systems, Prentice-Hall, Inc., 1980, (especially Sec. 6.5), which is incorporated by reference.

Channel characterization involves finding a set of channel realizations (e.g., functions) that indicate channel quality with respect to some performance metric (e.g., error probability or asymptotic criteria). In the MIMO channel, several variables contribute to the channel quality (and thus, to the optimization of channel quality), including the choice of space-time codes, receiver-terminal selection, and receiver algorithm(s) employed.

In one embodiment of the invention, a subset of WTs in a WLAN group may be selected such as to provide optimal WWAN transmission and/or reception within at least one predetermined constraint, such as an optimal or maximum number of active WWAN transceivers within the WLAN group. Such predetermined constraints may be established to optimize some combination of WWAN link performance and resource use within the WLAN group. In one embodiment, WTs experiencing the best WWAN channel conditions may be selected. Techniques employing antenna selection, such as may be used for diversity processing with antenna arrays, may be used in embodiments of the present invention. In one aspect of the invention, resource conservation may focus on WT battery power, MIMO processing complexity, and/or WLAN bandwidth.

Certain embodiments of the invention may distinguish between circuit power (e.g., power used to perform signal processing) versus transmission power. Other embodiments of the invention may provide consideration for the total battery power (e.g., processing power plus transmission power) budget, such as to provide power (e.g., battery usage) load balancing between WTs. Thus, embodiments of the invention may optimize a balance of signaling parameters, including (but not limited to) transmission power, channel-coding (and decoding) complexity, modulation, signal processing and the complexity associated with cooperative array processing parameters (e.g., number of active array elements, number of channels, number of WTs employed to perform signal processing, number of WTs in a WLAN group, type of array-processing operations, etc.).

Any combination of various channel-characterization functions may be employed as a measure of link performance. Example functions including, but not limited to, the following may be employed. Possible functions include the average signal strength:

$$P(H) = \frac{1}{N}\sum_{n=0}^{N-1} \|H^{(n)}\|_F^2$$

the average mutual information:

$$\bar{I}(H) = \frac{1}{N}\sum_{n=0}^{N-1} \log\det\left(I_{M_r} + \frac{E_s}{N_o M_t} H^{(n)} H^{(n)H}\right)$$

and the normalized average mutual information:

$$\bar{I}(H) = \frac{1}{N}\sum_{n=0}^{N-1} \log\det\left(I_{M_r} + \frac{E_s}{N_o}\frac{1}{\alpha} H^{(n)} H^{(n)H}\right)$$

where

$$\alpha = \frac{1}{NM_tM_r}\sum_{n=0}^{N-1}\|H^{(n)}\|_F^2$$

is an estimate of the path loss.

Theoretical capacity in a MIMO channel is typically expressed as:

$$C=\log_d \det[I_{M_r}+\rho/M_tHH^*]$$

where ρ is the average SNR.

A preferred embodiment of the invention may employ error-correcting codes to add structured redundancy to the information bits. This can be done to provide diversity, such as temporal diversity, spatial diversity, and/or frequency diversity. Embodiments of the invention may employ spreading codes, which are well known in the art. In addition to collaborative MIMO operations, the WTs may engage in collaborative decoding. In particular, a WLAN group may be provided with functionality that directs the WTs to coordinate WWAN information exchange and decoding via the WLAN.

In yet another embodiment of the invention, a WWAN terminal may be adapted to receive channel information (and/or even received data) from WTs, perform array-processing (e.g., MIMO) computations, and then upload the resulting array-processing weights to the WTs. The WTs may simply apply the weights to their transmitted and/or received WWAN signals, and perform any other related operations, such as combining.

FIG. **1**C illustrates a WLAN group **110** comprising a plurality of WTs **101-103** adapted to communicate with at least one WWAN node **119**. A WWAN channel **99** expresses distortions, interference, and noise that affect WWAN transmissions between the WTs **101-103** and the WWAN node **119**. Channel estimation characterizes propagation characteristics (e.g., multipath, shadowing, path loss, noise, and interference) in the WWAN channel.

In one embodiment of the invention, a given WWAN transmission is separated into spectral components (such as denoted by f_1, f_2, and f_3) by the WLAN group **110**. For example, each of the WTs **101-103** may be adapted to receive predetermined spectral components f_1, f_2, and f_3 of a given transmission intended for a particular WT. Alternatively, each of the WTs **101-103** may be adapted to transmit one or more associated predetermined spectral components to the WWAN node **119**.

The selection of spectral components f_1, f_2, and f_3 and their association with particular WTs **101-103** is typically performed to optimize WWAN system performance relative to the current WWAN channel **99**. For example, since the frequency-dependent fading profile in a scattering-rich environment tends to be unique for each spatially separated WT **101-103** channel, the spectral components f_1, f_2, and f_3 are preferably selected to minimize the effects of deep fades and/or interference. Spectral-component selection may be selected and/or adapted to optimize one or more WWAN link-performance metrics, including, but not limited to, SNR, BER, PER, and throughput. Spectral-component selection may be performed to achieve other objectives, such as to distribute processing loads across the WLAN group **110**.

The spectral components f_1, f_2, and f_3 may be characterized by overlapping or non-overlapping frequency bands. Spectral components f_1, f_2, and f_3 may each include continuous or discontinuous (e.g., frequency interleaved) frequency-band components. Spectral components f_1, f_2, and f_3 may comprise similar or different bandwidths. Furthermore, the spectral components f_1, f_2, and f_3 may include gaps or notches, such as to notch out interference or deep fades. Accordingly, an aggregate signal derived from combining the spectral components f_1, f_2, and f_3 may include gaps or notches.

WWAN communication signals may include multicarrier (e.g., OFDM) or single-carrier signals. In the case of single-carrier signals, the WTs **101-103** can be adapted to perform frequency-domain synthesis and/or decomposition, such as described in published patent appl. nos. 20040086027 and 20030147655, which are hereby incorporated by reference in their entireties.

FIG. **1**D illustrates a similar communication-system embodiment to that shown in FIG. **1**C, except that the transmissions between the WWAN node **119** and the WTs **101-103** are characterized by different, yet complementary, code spaces c_1, c_2, and c_3. In this case, the term complementary means that the coded transmissions corresponding to the code spaces c_1, c_2, and c_3 can sum to produce at least one predetermined WWAN coded data sequence. This may be a weighted sum due to the given channel conditions. A predetermined WWAN coded data sequence may employ a code that would ordinarily (in view of the prior art) be employed in whole. That is, it would not ordinarily be partitioned into sub-codes to be transmitted by different transmitters or received by different receivers.

In one embodiment of the invention, the code spaces c_1, c_2, and c_3 correspond to direct-sequence codes, such as may be used to provide for spreading and/or multiple access. A superposition of signals transmitted across the code spaces c_1, c_2, and c_3 may provide at least one predetermined WWAN coded data sequence received by at least one WWAN node **119**. Similarly, a superposition of signals received by the WTs **101-103** and mapped onto the code spaces c_1, c_2, and c_3 may provide at least one predetermined WWAN coded data sequence that would ordinarily (in view of the prior art) be intended for a single WT. Preferred embodiments of the invention may provide for channel corrections (e.g., pre-distortion and/or receiver-side channel compensation) by either or both the WLAN group **110** and the WWAN node **119**. Accordingly, the code spaces c_1, c_2, and c_3 may be adapted to account for channel conditions.

In another embodiment of the invention, the code spaces c_1, c_2, and c_3 may correspond to direct-sequence codes having predetermined spectral characteristics. It is well known that different time-domain data sequences may be characterized by different spectral distributions. Accordingly, embodiments of the invention may provide for selecting complementary codes c_1, c_2, and c_3 having predetermined spectral characteristics with respect to WWAN channel conditions affecting the links between the WTs **101-103** and the WWAN node **119**. Thus, the codes c_1, c_2, and c_3 may be selected according to the same criteria employed for selecting the spectral components f_1, f_2, and f_3.

FIG. **1**E illustrates an embodiment of the invention in which a first WLAN group **110** (such as comprising WTs **101-103** connected via WLAN **109**) is adapted to communicate with a second WLAN group **120** (such as comprising WTs **111-113** connected via WLAN **118**) via WWAN channel **99**. Applications of this embodiment may be directed toward peer-to-peer and multi-hop networks. Specifically, antenna-array processing (e.g., MIMO operations) may be performed by both WLAN groups **110** and **120**. Each WLAN group (such as WLAN groups **110** and **120**) may

function as a single node in an ad-hoc network, a peer-to-peer network, or a multi-hop network. For example, any communication addressed to (or routed through) a particular node (such as one of the WTs **101-103**) may be advantageously processed by one or more of the WTs **101-103** in the WLAN group **110**. In one embodiment, each active WT **101-103** in the WLAN group **110** may be responsive to communications addressed to itself and to at least one other WT **101-103** in the WLAN group **110**.

The WLAN **109** may be used to inform individual WTs **101-103** which node address(es) (or multiple-access channel assignments) to be responsive to. Similarly, the WLAN **109** may convey information to WTs **101-103** in order to spoof node addresses and/or multiple-access information and otherwise help WTs **101-103** assume channelization information related to a particular WT identity prior to transmitting signals into the WWAN. Thus, the WLAN **109** can be used to assist in synchronizing WT interactions with the WWAN. The functionality of providing for sharing WWAN-access information between WTs **101-103** may be coordinated and controlled with respect to cooperative-array (e.g., MIMO) processing.

FIG. **1**F shows an embodiment of the invention wherein a WLAN group **110** includes a plurality of WWAN-active WTs **101-103** and at least one WWAN-inactive WT, such as WTs **104-106**. The WWAN-active WTs **101-103** may be configured to directly transmit and/or receive WWAN communication signals **129**. WWAN-inactive WTs **104-106** are defined as WLAN-connected terminals that do not directly communicate with the WWAN. Rather, the WWAN-inactive WTs **104-106** may be in a sleep or standby mode.

In a preferred embodiment of the invention, signals routed to and from a particular WT **101-103** may be provided with beam-forming weights that allow for phased-array and/or sub-space processing. Calculation of the weights may be facilitated via distributed computing (e.g., as a load-balancing measure) across a plurality of the WTs (**101-106**). This allows the WLAN group **110** to scale the effective throughput of the WWAN link and coordinate system throughput with local area load balancing. In particular, the efficiency of the WWAN link is proportional to the smaller of the number of array elements at the WWAN terminal (not shown) and the number of WWAN-active transceiver antennas linked by the WLAN **109**. When an equal number N of antennas is employed on both sides of the link, up to an N-fold increase in the link throughput is possible. Channel coding can be employed to exchange this increase for improved probability-of-error performance, increased range, and/or lower transmission power.

Although the capacity of a MIMO channel increases with the number of antennas employed at both ends of the link, the complexity of the transmission and reception algorithms increases accordingly. For example, the sphere decoder has a typical complexity of $O(M_T^6)$, where M_T is the number of transmitting antennas, and V-Blast has a typical complexity of $O((M_R M_T)^3)$, where M_R and M_T are respectively the number of receiving and transmitting antennas. However, the computational power increases only linearly with respect to the number of WTs (assuming each WT has identical processing capability). Thus, the aggregate processing power of the WTs may determine the maximum number of active antennas that a WLAN group **110** can support.

One solution to the disparity between required processing power and the number of WT processors in a given WLAN group **110** is to ensure that the total number of WTs exceeds the number of MIMO channels in the group **110**. This approach enables at least two significant processing advantages:

1) The processing load may be spread over a larger number of mobile-terminal processors, and
2) A form of antenna-switching diversity can be used to optimize performance and throughput in the MIMO channel.

Antenna switching is a well-known technique that switches between various antennas and selects ones having the best signal outputs. This can be done to reduce correlation between antennas, thereby improving MIMO performance. Antenna switching is described in G. J. Foschini, M. J. Gans, "On limits of wireless communication in a fading environment when using multiple antennas," *Wireless Personal Communications*, vol. 6, no. 3, pp. 311-335, March 1998, which is incorporated by reference. In some embodiments of the invention, WTs having the most favorable WWAN channel characteristics may be selected to improve MIMO performance without any increase in processing complexity.

In some embodiments of the invention, one or more WWAN-inactive WTs **104-106** may be employed for WLAN-based functions, such as (but not limited to) WLAN network control, distributed-computing applications, and WWAN-interface control. For example, WLAN network control may include any of the well-known network-control functions, such as terminal identification, authentication, error correction, routing, synchronization, multiple-access control, resource allocation, load balancing, power control, terminal-state management, hand-offs, etc.

The WLAN **109** may employ distributed computing across a plurality of the WTs. Distributed computing may be employed simply to achieve increased processing power. Alternatively, distributed computing may include other objectives, such as balancing computational processing loads or balancing power consumption across the WTs **101-106** in the WLAN group **110**. Computational loads on the WLAN group can potentially include any WWAN-related computations, such as WWAN channel estimation, WWAN channel compensation, diversity combining, WWAN channel coding/decoding, and cooperative array processing (e.g., MIMO weight calculation, interference cancellation, multi-user detection, matrix operations, and other smart antenna array processing operations).

WWAN-interface control may include distributing WWAN data and control information between the WTs **101-106**. In one exemplary embodiment of the invention, at least one of the WTs **101-106** comprises a data source that distributes its data to at least one other WT **101-106** for transmission into the WWAN. In a similar embodiment of the invention, received WWAN signals intended for a particular WT **101-106** are received by a plurality of WWAN-active WTs **101-103**. The received WWAN signals may optionally be processed by one or more WTs **101-106** prior to being routed to the intended WT **101-106**. Accordingly, WWAN channel-access information may be routed to a plurality of WWAN-active WTs **101-103** such that they function together as a single WT **101-106**.

The determination of which WTs **101-106** are active is typically performed by decision processing within the WLAN group **110** that determines which WTs **101-106** have the highest quality WWAN channel(s). The number of WWAN-active WTs (such as WTs **101-103**) may be determined by one or more factors, including WT channel quality, array-processing complexity, available computational resources within the WLAN group **110**, load balancing, and information-bandwidth requirements. In an alternative

embodiment of the invention, the WWAN assigns cooperative channel-access information to the WTs **101-103** and may optionally determine which WTs **101-106** are active.

Some embodiments of the invention may take into consideration not only the MIMO complexity at the WTs, but also the added complexity associated with distributing the computational loads over WTs in a given WLAN group. Both MIMO and distributed computing overheads can be characterized as a function of the number of WTs in a WLAN group. Furthermore, the information bandwidth of a given WLAN channel limits the rate of information exchange between WTs. Accordingly, local channel conditions within the WLAN may affect throughput and range, and thus limit the number of WTs within the WLAN group. Either the WLAN capacity or the computational capability of each WT may set a practical limit on the number of WTs in a WLAN group and the overall frequency-reuse factor.

Another important factor that can impact the WLAN group size is the channel rate-of-change, which may be due to motion of the WTs and/or other objects in the WWAN environment. In particular, rapidly changing channel conditions may necessitate frequent updates to the MIMO computations, thus increasing the computational load on WLAN group and potentially increasing the required data transfer across the WLAN. Similarly, local channel conditions may dictate the flow of data if distributed computing is employed.

MIMO systems experience substantial degradation in data transfer rates in mobile channels. Time-varying multipath-fading profiles commonly experienced in a mobile wireless network exhibit deep fades that often exceed 30 dB. Commercial viability of some embodiments of the present invention requires the ability to tolerate a rapidly changing channel. A promising approach to this problem is to employ diversity to reduce the channel rate-of-change. In a wide-band system, or equivalently, in a system comprised of a number of narrowband subcarriers distributed (e.g., interleaved) over a wide frequency band, deep fades affect only a portion of the total channel bandwidth. Therefore, frequency and/or spatial diversity may be employed to reduce the likelihood of deep fades in a multipath environment. Similarly, alternative forms of diversity may be employed. In a mobile environment, this translates into reducing the channel rate-of-change.

FIG. **1**G illustrates a cooperative beam-forming embodiment of the invention that functions in the presence of a desired WWAN terminal **119** and an external interference source (or jammer) **118**. WTs **101-103** in a WLAN group **110** may coordinate their received aggregate beam pattern(s) to null out a jamming signal **115**. Array-processing operations performed on signals received from the WTs **101-103** may take the form of phased-array processing, which minimizes the array's sensitivity to signals arriving from one or more angles. Alternatively, array processing may employ baseband (or intermediate-frequency) interference cancellation. Similarly, beam-forming operations may be employed to cancel emissions transmitted toward one or more terminals (such as jammer **118**).

FIG. **1**H illustrates a cooperative beam-forming embodiment of the invention configured to function in the presence of a plurality of desired WWAN terminals **119** and **127**. In one embodiment of the invention, the WWAN terminals **119** and **127** may be common to a particular WWAN, and the configuration illustrated in FIG. **1**H may include a soft hand-off in which redundant transmissions are transmitted between the WLAN group **110** and the WWAN terminals **119** and **127**. In this case, the WLAN group may be distributed geographically over a plurality of WWAN sectors or cells. In one aspect of the invention, the WLAN group **110** may adapt its connectivity with the WWAN to transition to the cell or sector offering the optimal aggregate WWAN channel quality. Accordingly, the WLAN group may adapt its selection of WWAN-active WTs in response to a hand off.

In another embodiment of the invention, the WLAN group **110** may employ a first WWAN connection (such as illustrated by a connection between WTs **101** and **102**, and WWAN terminal **119**) and a second WWAN connection (such as illustrated by a connection between WT **103** and WWAN terminal **127**) to transmit and/or receive one or more data streams. The WLAN group **110** may employ a plurality of WWAN user channels in a given WWAN. Similarly, the WLAN group **110** may employ connections to a plurality of different WWANs.

FIG. **1**I illustrates an embodiment of the invention that provides a plurality of WTs **101-106** in a WLAN group **110** with access to a plurality of WWAN services (i.e., WWANs). For example, WT **101** is provided with a communication link with an IEEE 802.16 access-point terminal **116** in an IEEE 802.16 network, WT **102** maintains access capabilities to a 3G-cellular terminal **119**, and WT **103** has connectivity to an IEEE 802.11 access point **117**. WLAN connectivity **109** is adapted to enable any of the WTs **101-106** in the WLAN group **110** to access any of the plurality of WWAN (802.16, 3G, and 802.11) services.

The WLAN **109** may include a WWAN-access controller (not shown), which may take the form of WLAN-control software residing on a physical device, such as one or more WTs **101-106**. Connectivity of the WTs **101-106** to the available WWAN services may be performed with respect to a combination of technical rules and business rules. For example, WWAN access is typically managed using technical rules, such as network load balancing, power conservation, and minimizing computational processing loads. However, WWAN access can also be influenced by business rules, such as enabling a predetermined cost/service ratio for individual WTs **101-106**. For example, the WWAN-access controller (not shown) can anticipate the economic cost of particular WWAN services to the user, as well as user communication needs, when assigning WWAN access to individual WTs **101-106**. Each WT **101-106** may provide the WWAN-access controller (not shown) with a cost tolerance, which can be updated relative to the type of communication link desired. For example, high-priority communication needs (such as particular voice communications or bidding on an online auction) may include permissions to access more expensive WWAN connections in order to ensure better reliability.

The overall goal of WWAN access may be to achieve optimal connectivity with minimum cost. Accordingly, WWAN-access algorithms may include optimization techniques, including stochastic search algorithms (like multi-objective genetic algorithms). Multi-objective optimization are well known in the art, such as described in E. Zitzler and L. Thiele, "Multiobjective evolutionary algorithms: A comparative case study and the strength pareto approach," *IEEE Tran. on Evol. Comput*, vol. 3, no. 4, November 1999, pp. 257-271 and J. D. Schaffer, "Multiple objective optimization with vector evaluated genetic algorithms," *Proceedings of 1st International Conference on Genetic Algorithms,* 1991, pp. 93-100, both of which are incorporated by reference.

A WWAN-access controller (not shown) preferably ensures an uninterrupted session when transitioning from one WWAN to another. In particular, the transition between different WWANs should be invisible to the user. This requires that the WWAN-access controller (not shown) be

adapted to store user state information (e.g., save browser pages or buffer multimedia data streams). Furthermore, back-end systems may preferably be employed to manage cooperative WWAN access in order to consolidate different WWAN-access charges into a single bill for the user.

In FIG. **1**J, a plurality of WTs **101-106** in a WLAN group **110** includes at least one WWAN terminal **106**. The WTs **101-105** may contribute beam-forming capabilities to the WWAN terminal **106**, such as to increase range, increase spatial reuse, reduce transmission power, and/or achieve any of other various beamforming objectives.

In one embodiment of the invention the WTs **101-105** function as lens for WWAN signals transmitted and received by the WWAN terminal **106**. For example, the WTs **101-106** may collect received WWAN signals and then focus retransmitted WWAN signals at the WWAN terminal **106**. Similarly, the WTs **101-105** may assist in the transmission of WWAN signals from the WWAN terminal **106** to one or more remote sources. In essence, the WTs **101-105** may function like a radio relay, but with directionality and focusing capabilities. In this embodiment, the WLAN connectivity of WTs **101-105** with the WWAN terminal **106** may not be necessary.

In another embodiment of the invention, one or more of the WTs **101-106**, such as WWAN terminal **106**, may be adapted to process the majority (or entirety) of necessary beam-forming computations. In this case, WT **106** is designated as a computer-processing terminal. The computer-processing terminal **106** is adapted to include specific computational resources for processing WWAN signals received by other WTs (such as WTs **101-103**), which are then relayed via the WLAN **109** to the computer-processing terminal **106**. Similarly, the computer-processing terminal **106** may be adapted to perform signal-processing operations associated with WWAN transmission. Computational operations associated with other WWAN signal-processing operations (e.g., coding, decoding, channel estimation, network-access control, etc.) may be provided by the computer-processing terminal **106**.

FIG. **2**A illustrates a functional embodiment of the invention that may be realized in both method and apparatus embodiments. A plurality M of WWAN Interfaces **1101.1-1101**.M is provided for coupling WWAN signals to and/or from at least one WWAN. In one functional embodiment, WWAN Interfaces **1101.1-1101**.M may include WWAN transceivers adapted to convert received WWAN signals into received baseband signals. A plurality of WWAN baseband processors **1102.1-1102**.M are optionally provided for performing baseband processing (such as, but not limited to, channel compensation, A/D conversion, frequency conversion, filtering, and demultiplexing) on the received baseband signals. Alternatively, the function of the WWAN baseband processors **1102.1-1102**.M may be performed by the WWAN Interfaces **1101.1-1101**.M.

Baseband outputs from the WWAN baseband processors **1102.1-1102**.M are coupled into a plurality of array processors, such as MIMO combiners **1103.1-1103**.M. In a MIMO channel, the received WWAN signals (and thus, the baseband outputs) are characterized by a plurality of overlapping (i.e., interfering) signals. Although MIMO combiners **1103.1-1103**.M are shown, any type of array processor may be employed. The number of array processors may be less than, equal to, or greater than the number M of WWAN Interfaces **1101.1-1101**.M. Baseband outputs may also be coupled into a WLAN **1105**, which is coupled to the plurality of MIMO combiners **1103.1-1103**.M. Each MIMO combiner **1103.1-1103**.M may be adapted to receive baseband outputs from two or more baseband processors **1102.1-1102**.M wherein at least one of those baseband outputs is coupled to the MIMO combiner **1103.1-1103**.M via the WLAN **1105**.

A particular m^{th} MIMO combiner **1103**.*m* need not process data from a corresponding (m^{th}) WWAN Interface **1101**.*m*. Rather, the mth MIMO combiner **1103**.*m* may process baseband signal outputs from a plurality of WWAN Interfaces **1101**.*p* {p=1, . . . M, where p≠m}.

The WLAN **1105** comprises at least one WLAN channel between at least one baseband output (e.g., baseband processor **1102.1-1102**.M outputs) and at least one array processor, such as the MIMO combiners **1103.1-1103**.M. The WLAN **1105** may include WLAN interfaces (not shown) and associated WLAN-control hardware and/or software (not shown).

The MIMO combiners **1103.1-1103**.M may be adapted to separate the overlapping signals and output at least one desired transmission therefrom. Outputs of the MIMO combiners **1103.1-1103**.M are optionally processed by secondary data processors **1104.1-1104**.M, which may provide coupling into the WLAN **1105**. The secondary data processors **1104.1-1104**.M may be adapted to perform demodulation, error-correction decoding, data formatting, and/or other related baseband-processing functions.

In some embodiments of the invention, MIMO combiner **1103.1-1103**.M outputs may be coupled via the WLAN **1105** to other MIMO combiners **1103.1-1103**.M and/or secondary data processors **1104.1-1104**.M. For example, embodiments of the invention may employ an iterative cancellation process, such as successive interference cancellation (which is well-known in the art), involving the use of strongest-signal estimates, and then next-strongest-signal estimates to cancel known interference in weaker signals. Alternatively, embodiments may employ parallel cancellation.

FIG. **2**B illustrates an embodiment of the invention including a plurality M of WTs **1109.1-1109**.M, each comprising a corresponding combination of a WWAN Interface **1101.1-1101**.M, an optional WWAN baseband processor **1102.1-1102**.M, a combiner (such as a MIMO combiner **1103.1-1103**.M), and a secondary data processor **1104.1-1104**.M. The WTs **1109.1-1109**.M are coupled together by a WLAN **1105**, which is configured to convey data between the WTs **1109.1-1109**.M in order to enable cooperative antenna-array processing.

A WT, such as any of the WTs **1109.1-1109**.M, includes any system or device provided with communicative connectivity means to a WLAN **1105**. Two or more WTs **1109.1-1109**.M are preferably provided with WWAN interfaces, such as WWAN Interface **1101.1-1101**.M. A plurality of WTs **1109.1-1109**.M may share at least one WLAN **1105**. In one embodiment of the invention, individual WTs **1109.1-1109**.M may share the same WWAN service. This enables the WLAN group **110** to perform either or both transmit beam-forming and receive beam-forming (i.e., combining) operations.

In another embodiment of the invention, WTs **1109.1-1109**.M may have connections to different WWANs and/or WWAN services. This enables the WLAN group **110** to achieve WWAN-service diversity. One or more WTs **1109.1-1109**.M may optionally be capable of accessing multiple WWAN services. For example, many cellular handsets are provided with multi-mode capabilities, which give them the ability to access multiple WWANs. Some of the WTs **1109.1-1109**.M may have no WWAN service. For example, one or more WTs **1109.1-1109**.M may be out of range, in a WWAN dead spot, in an inactive WWAN state, or configured only to communicate via the WLAN **1105**. WTs

1109.1-1109.M include, but are not limited to, cell phones, radio handsets, pagers, PDAs, wireless sensors, RFID devices, vehicle radio communication devices, laptop computers with wireless modems, wireless network access points, wireless routers, wireless switches, radio repeaters, transponders, and devices adapted to include satellite modems.

A WLAN group **110** may be adapted to perform any of various types and combinations of diversity and MIMO beam-forming. Three commonly used linear diversity-combining techniques include switched (or selection) combining, maximal ration combining (MRC), and equal gain combining (EGC). Other combining techniques may be employed. The impact of using diversity may be expressed by a probability distribution p(γ) of the SNR γ at the output of a combining network. For switched diversity, wherein the combiner switches to the diversity branches (e.g., WTs) having the strongest signal, p(γ) is given by:

$$p(\gamma) = \frac{L}{\Gamma} e^{-\gamma/\Gamma}[1 - e^{-\gamma/\Gamma}]^{L-1}$$

where Γ is the average SNR for each diversity branch and L is the number of diversity branches. MRC weights branches (e.g., WT signals received from the WWAN) having better SNR more heavily (i.e., with greater-magnitude weights) than branches having poorer SNR. The p(γ) for MRC is given by:

$$p(\gamma) = \frac{\gamma^{l-1} e^{-\gamma/\Gamma}}{\Gamma^{L}(l-1)!}$$

For EGC, p(γ) is given by:

$$p(\gamma) = \frac{L}{a\Gamma} e^{-\gamma/a\Gamma}[1 - e^{-\gamma/a\Gamma}]^{L-1}$$

where $a=\sqrt{L/1.25}$ for L≥2, and 1 otherwise.
These diversity techniques provide the greatest improvements when the branches are uncorrelated.

Adaptive arrays (or smart antennas) may include antenna systems that automatically adjust to achieve some predetermined performance criterion, such as maximizing the signal to interference (S/I) ratio, SINR, or link margin. Adaptive antenna techniques include switched beam, beam steering, and optimum combining (e.g., a linear spatial filtering approach that employs adaptation to closely match an output signal with a reference signal). A filtering process typically suppresses any artifacts that are not part of the desired incoming signal, including noise and interference.

In an optimum combining system, signals from each WT are down converted to baseband and converted to digital signals in an ADC. Noise associated with the front end of the down converter and other sources is naturally added to the signal. The resulting signal $x_m(k)$ is multiplied by a complex weighting function $w_m(k)$ and summed with similar signals from other WT antenna elements. The resulting sum signal $\Sigma w_m(k)x_m(k)$ is compared with a previously derived (and updated) reference signal (e.g., a training sequence). An error signal e(k) is generated and used to adjust the weight values in order to minimize e(k). The objective is to derive the weighting function $w_m(k)$ that enables the best match between an estimated received signal and the actual transmitted signal. Alternatively, an adaptive WT array may be configured as an analog array wherein amplitude and phase adjustments (i.e., weighting functions) are performed at RF or IF.

In a MIMO communication system, signals transmitted from M_T transmit sources interfere with each other at a receiver comprising the WTs **1109.1-1109**.M. Thus, interference cancellation (such as matrix inversion, channel transfer function inversion, and adaptive filtering) may be employed by one or more MIMO combiners **1103.1-1103**.M to separate the signals. The received signal is expressed by:

$$y=Hx+n$$

where the received signal, y, is a vector with M_R terms $\{y_i, i=1, \ldots, N_R\}$ corresponding to signals received by M_R (where M_R may have a value of 2 to M) receiver elements (i.e., WTs); x represents the transmitted signal, which is a vector having M_T terms $\{x_i, i=1, \ldots, M_T\}$ corresponding to signals transmitted by M_T transmitter elements; His an $M_R \times M_T$ channel-response matrix that characterizes the complex gains (i.e., transfer function, or spatial gain distribution) from the M_T transmission elements to the M_R receive elements; and n represents AWGN having zero mean and zero variance.

In the case where the channel is characterized by flat fading, such as when a narrowband signal is employed (e.g., a sub-carrier of a multi-carrier signal), the elements in matrix H are scalars. The channel-response matrix H may be diagonalized by performing an eigenvalue decomposition of the $M_T \times M_T$ correlation matrix R, where $R=H^H H$. Eigenvalue decomposition is expressed by:

$$R=EDE^H$$

where E is an $M_T \times M_T$ unitary matrix with columns corresponding to the eigenvectors e_i of R, and D is an $M_T \times M_T$ diagonal matrix wherein the diagonal elements are eigenvalues λ_i of R. The diagonal elements of D indicate the channel gain for each of the independent MIMO channels. Alternatively, other eigenvalue-decomposition approaches, such as singular value decomposition, may be employed.

The process for diagonalizing the MIMO channel response is initiated by multiplying a data vector d with the unitary matrix E to produce the transmitted vector x: x=Es. This requires the transmitter to have some information corresponding to the channel-response matrix H, or related information thereof. The received vector y is then multiplied with $E^H H^H$ to provide an estimate of data vector s, which is expressed by:

$$\hat{s}=E^H H^H y=E^H H^H HEs+E^H H^H n=Ds+\hat{n}$$

where $\hat{n}$ is AWGN having a mean vector of 0 and a covariance matrix of $\Lambda_n=\sigma^2 D$.

The data vector s is transformed by an effective channel response represented by the diagonal matrix D. Thus, there are N_s non-interfering subchannels wherein each subchannel i has a power gain of λ_i^2 and a noise power of $\sigma^2\lambda_i$.

In the case where MIMO processing is performed on a multicarrier signal, or some other wideband signal that is spectrally decomposed into narrowband components, eigenmode decomposition may be performed for each frequency bin f_n.

If multicarrier spreading codes are employed (e.g., orthogonal DFT, or CI, codes), the channel-response matrix H can cause inter-symbol interference between spread data symbols, even in a SISO arrangement. Accordingly, the eigenmode decomposition technique described previously is

applicable to multicarrier spreading and despreading. In one embodiment of the invention, eigenmode decomposition may be applied across two or more dimensions (e.g., both spatial and frequency dimensions). In another embodiment of the invention, eigenmode decomposition may be applied across a single dimension (e.g., spatial or frequency dimensions). For example, multicarrier spreading codes (for example, orthogonal codes for data multiplexing in a given multiple-access channel) may be generated and processed via eigenmode decomposition.

Any of various water-filling or water-pouring schemes may be employed to optimally distribute the total transmission power over the available transmission channels, such as to maximize spectral efficiency. For example, water-filling can be used to adapt individual WT transmission powers such that channels with higher SNRs are provided with correspondingly greater portions of the total transmit power. A transmission channel, as defined herein, may include a spatial (e.g., a sub-space) channel, a space-frequency channel, or some other channel defined by a set of orthogonalizing properties. Similarly, water filling may be used at a physically connected (i.e., wired) antenna array. The transmit power allocated to a particular transmission channel is typically determined by some predetermined channel-quality measurement, such as SNR, SINR, BER, packet error rate, frame error rate, probability of error, etc. However, different or additional criteria may be employed with respect to power allocation, including, but not limited to, WT battery life, load balancing, spatial reuse, power-control instructions, and near-far interference.

In conventional water filling, power allocation is performed such that the total transmission power P_T is some predetermined constant:

$$P_T = \sum_{j \in K} \sum_{k \in L} P_j(k)$$

where $L=\{1, \ldots, N_s\}$ signifies the available subspaces and $K=\{1, \ldots, N_f\}$ represents the available sub-carrier frequencies f_n. The received SNR (expressed by $\psi_j(k)$) for each transmission channel is expressed by:

$$\psi_j(k) = \frac{P_j(k)\lambda_j(k)}{\sigma^2}$$

for $j=\{1, \ldots, N_s\}$ and $k=\{1, \ldots, N_f\}$

The aggregate spectral efficiency for the $N_s N_f$ transmission channels is expressed by:

$$C = \sum_{j=1}^{N_s} \sum_{k=1}^{N_f} \log_2(1 + \psi_j(k))$$

The modulation and channel coding for each transmission channel may be adapted with respect to the corresponding SNR. Alternatively, transmission channels may be grouped with respect to their data-carrying capability. Thus, groups of transmission channels may share common modulation/coding characteristics. Furthermore, transmission channels having particular SNRs may be used for particular communication needs. For example, voice communications may be allocated to channels having low SNRs, and thus, data-carrying capabilities. In some cases, transmission channels that fail to achieve a predetermined threshold SNR may be eliminated. In one embodiment of the invention, water filling is employed such that the total transmission power is distributed over selected transmission channels such that the received SNR is approximately equal for all of the selected channels.

An embodiment of the invention may employ reliability assessment for determining required processing and virtual-array size (i.e., the number of active WTs functioning as WWAN receiver elements). Received bits or symbols that have low reliability need more processing. Bits or symbols with high reliability may be processed with fewer elements (WTs) or provided with lower processing requirements. More information typically needs to be combined for data streams having less reliability and less information may need to be combined for data streams having more reliability. Also, nodes (WTs) with good channel quality may share more information via the WLAN than nodes having poor channel quality. Optimization algorithms, such as water-filling algorithms may be employed in the reliability domain.

FIG. **3**A illustrates an embodiment of the invention in which a WLAN controller for a WLAN group of WTs first identifies received data streams that have the least reliability (e.g., reliability that is below a predetermined threshold) **301**. Then the WLAN controller increases allocated processing (e.g., increases the number of receiver nodes, increases the number of processing nodes, employs a processing approach having higher computational complexity, etc.) **302** to those data streams. Data symbols may be combined from the smallest number of nodes such that the reliability of the sum is maximized, or at least exceeds a predetermined threshold reliability. The processes **301** and **302** may be repeated **303** until a predetermined result is achieved or until there is no more data left for processing.

FIG. **3**B illustrates an embodiment of the invention in which a WLAN controller identifies received data streams that have the most reliability, or data streams having reliability that exceeds a predetermined reliability threshold **311**. The WLAN controller may decrease allocated processing (e.g., decrease the number of receiver nodes, decrease the number of processing nodes, employ a processing approach having lower computational complexity, etc.) **312** to those data streams. The processes **301** and **302** may be repeated **303** until a predetermined result is achieved or until there is no more data left for processing. Embodiments of the invention may provide for encoding information across channels having a wide range of reliability.

Embodiments of the invention may be configured to perform blind signal separation (BSS), such as independent component analysis. For example, A. Jourjine, S. Rickard, and O. Yilmaz, "Blind Separation of Disjoint Orthogonal Signals: Demixing N Sources from 2 Mixtures," in *Proceedings of the* 2000 *IEEE International Conference on Acoustics, Speech, and Signal Processing*, Istanbul, Turkey, June 2000, vol. 5, pp. 2985-88, which is included herein by reference, describes a blind source separation technique that allows the separation of an arbitrary number of sources from just two mixtures, provided the time-frequency representations of the sources do not overlap. The key observation in the technique is that for mixtures of such sources, each time-frequency point depends on at most one source and its associated mixing parameters.

In multi-user wireless communication systems that employ multiple transmit and receive antennas, the transmission of user information through a dispersive channel

produces an instantaneous mixture between user transmissions. BSS may be used in such instances to separate received transmissions, particularly when training sequences and channel estimation are absent. In an exemplary embodiment of the invention, an OFDM-MIMO protocol may be provided across multiple independent WTs. Multiple transmissions are provided on at least one frequency channel, and frequency-domain techniques of BSS may be employed to recover received signals.

In one embodiment of the invention, at least one data transmission source may be adapted to convey its data across the WLAN to a plurality of WTs for transmission into the WWAN. In another embodiment of the invention, a plurality of WTs are adapted to receive data transmissions from a WWAN and couple said received data transmissions into a WLAN (with or without baseband processing) wherein centralized or distributed signal-processing means are provided for separating the data transmissions. Said signal-processing means includes any MIMO-processing techniques, including multi-user detection, space-time processing, space-frequency processing, phased-array processing, optimal combining, and blind source separation, as well as others.

In one embodiment of the invention, a vector of binary data symbols b (n) are encoded with a convolutional encoder to produce a coded signal:

$$s_i(n)=b_i(n)*c(n)$$

where c(n) represents a convolutional code of length L'. A cluster of N coded symbols corresponding to an ith user, data source, or data stream is represented by:

$$s_{n,i}=[s_i(n), \ldots, s_i(n+N-1)]^T$$

The transmit signal is generated by performing an N-point IDFT to $s_{n,i}$ to produce:

$$S_{n,i}=[S_i(n,0), \ldots, S_i(n,N-1)]^T.$$

where

$$S_i(n,k)=\sum_{m=0}^{N-1} s_i(n+m)e^{i2\pi km/N}$$

The values $S_i(n,k)$ are transmitted via at least one of N_t transmit antennas.

On the receive side, N_r receive antennas (typically, $N_r \geq N_t$) are employed. The signal received by a jth antenna is expressed by:

$$R_j(n)=\sum_{i=1}^{N_t} S_i(n)*h_{ij}+n_j(n)$$

where $n_j(n)$ represents the zero-mean AWGN introduced by the channel, and h_{ij} is the channel impulse-response of the ith transmit antenna to the jth receive antenna. The received signal can be interpreted as a convolutive mixture of the coded signals, where the channel matrix h represents the mixing system. An N-point DFT is applied to the received signals $R_j(n)$ to produce:

$$r_j=[r_j(n), \ldots, r_j(n+N-1)]^T$$

where

$$r_j(n)=\sum_{m=0}^{N-1} R_j(n+m)e^{-i2\pi km/N}$$

Typically, a sufficient guard interval or cyclic prefix is employed to eliminate inter-symbol interference.

The signals from the N_r receiver antennas are grouped with respect to frequency bin. An observation at a kth frequency bin are expressed by:

$$r_n(k)=[r_1(n+k), r_2(n+k), \ldots, r_{N_r}(n+k))]^T$$

$$=H(k)s(k)+n(k)$$

Thus, the observations $r_n(k)\{k=0, \ldots, N-1\}$ can be interpreted as an instantaneous mixture of the transmitted signals s(k), where H(k) represents the mixing system.

There are many approaches for estimating the transmitted signals s(k) from the received signals $r_n(k)$ that may be employed by the current invention. An exemplary embodiment of the invention employs BSS techniques. One class of BSS produces an output vector having the following form:

$$y(k)=W^H(k)r_n(k)$$

where W(k) is an $N_r \times N_t$ matrix that groups the coefficients of the separating system. The output y(k) can also be expressed by:

$$y(k)=G(k)s(k)+W^H(k)n(k)$$

where $G(k)=W^H(k)H(k)$ represents the mixing/separating system. The goal of the separation process is to calculate the matrices W(k) so that the G(k) matrices are diagonal and the effects of noise $W^H(k)n(k)$ are minimized. Many different approaches are applicable for achieving these goals.

A BSS algorithm (such as the one described in J. F. Cardoso, A. Souloumiac, "Blind Beamforming for non-Gaussian Signals," *IEEE-Proceedings-F*, vol. 140, no. 6, pp. 362-370, December 1993, which is incorporated by reference herein) may be employed to separate the instantaneous mixture in each frequency bin. Each output at frequency bin k' can be regarded as corresponding to a single source at bin k' multiplied by a particular gain introduce by the algorithm. The outputs y(k') are then used as reference signals in order to recover the sources at frequencies k'±1. For example, the separation matrices W(k) are determined by minimizing the mean-square error between the outputs $y(k)=W^H(k)r_n(k)$ and reference signals y(k'). For a given frequency bin k:

$$W_o(k)=\arg\min_{W(k)} E\lfloor |y(k)-\alpha y(k')|^2 \rfloor$$

where α is a real constant, which is selected with respect to the convolutional code:

$$\alpha=\frac{\sum_{p=0}^{L-1} c^2(p)}{\sum_{p=0}^{L-2} c(p)c(p+1)}$$

This is done to ensure G(k)=G(k'). The solution to the optimization problem is given by:

$$W_o(k)=\alpha R_{r_n}^{-1}(k)R_{r_n y}(k,k')$$

where

$$R_{r_n}(k)=E[r_n(k)x^H(k)] \text{ and}$$

$$R_{r_n y}(k,k')=E[r_n(k)y^H(k')]$$

FIG. **4**A illustrates an embodiment of the invention wherein a plurality M of WTs **1109.1-1109**.M is coupled to a MIMO processor **1103** via a WLAN **1105**. In this particular embodiment, a computer-processing terminal **1119** may include the MIMO processor **1103**. The computer processing terminal **1119** may be provided with WLAN-interface functionality, and may optionally include WWAN-interface functionality.

The computer-processing terminal **1119** may include any of a plurality WLAN-connected devices with signal-processing capability. For example, the computer-processing terminal **1119** may include one of the WTs **1109.1-1109**.M. In one aspect of the invention, the computer-processing terminal **1119** comprises a WLAN controller. In another aspect of the invention, the computer processing terminal **1119** comprises a network gateway, router, or access point including a CPU adapted to process signals received from the plurality of WTs **1109.1-1109**.M. Applications of embodiments of the invention include (but are not limited to) sensor networks, micro-networks, RFID systems, cellular networks, and satellite networks.

Each WT **1109.1-1109**.M may include a baseband processor **1102.1-1102**.M adapted to provide WWAN baseband (or IF) signals to the MIMO processor **1103** via the WLAN **1105**. The MIMO processor **1103** may be configured to separate interfering WWAN data symbols in the WWAN baseband signals. The separated WWAN data symbols are then coupled back to data processors **1104.1-1104**.M in the WTs **1109.1-1109**.M.

FIG. **4**B illustrates a functional embodiment of the invention in which MIMO processing operations (represented by MIMO processors **1103.1-1103**.M) may be distributed over two or more WTs **1109.1-1109**.M. Baseband processors **1102.1-1102**.M provide WWAN baseband signals to a WLAN controller **1106**, which may distribute the signals (and signal-processing instructions) to the MIMO processors **1103.1-1103**.M. The separated WWAN data symbols are then coupled back to data processors **1104.1-1104**.M.

FIG. **4**C represents a functional embodiment of the invention. At least one WT may provide WWAN access information **1140** to a WLAN controller. The WWAN access information typically includes necessary information (such as at least one WWAN channel assignment, authentication codes, etc.) to access at least one particular WWAN channel. The WWAN access information may optionally include performance information, such as WWAN channel estimates, link-bandwidth demand, link priority, and/or WWAN channel-quality measurements (e.g., SNR, SINR, BER, PER, latency etc.). This information is typically provided to the WLAN controller by one or more WTs.

The WLAN controller determines which WTs to activate **1141** for a particular WWAN communication link. This may be performed for either or both transmission and reception. The determination of which WTs will be active **1141** in a given WWAN link typically depends on a combination of factors, including (but not limited to) the number M of WTs required to achieve predetermined channel characteristics or access parameters, which WTs have the best WWAN channel quality, load balancing, power-consumption balancing, computational overhead, latency, and WLAN-access capabilities. Accordingly, the WLAN controller may send control information via the WLAN to the WTs that includes state information (e.g., operating-mode assignments, such as active, standby, sleep, and awake).

The WLAN controller may convey WWAN information to the active WTs **1142**. The WWAN information may be derived from the WWAN access information and provided to the WTs to establish and/or maintain at least one WWAN link. Accordingly, the WWAN information may include WWAN channel assignments. The WWAN information may include beam-forming weights and/or space-time codes. Accordingly, the step of conveying WWAN information to the WTs **1142** may optionally include a preliminary signal-processing step (not shown), such as blind adaptive or deterministic weight calculation. This preliminary signal-processing step (not shown) may be distributed among a plurality of the WTs, or it may be performed in a centralized mode, such as by a single computing terminal. A distributed-computing mode may take various forms. In one mode, each of a plurality of WTs takes its turn functioning as a computing terminal. In another mode, multiple WTs function as computing terminals simultaneously.

Communications in the WWAN link are coordinated between the WTs in order to synchronize the transmitted and/or received WWAN signals **1143**. A receiver embodiment of the invention may provide for synchronizing the received WWAN signals, such as to provide for coherent combining. A transmitter embodiment of the invention may provide for synchronizing the transmitted WWAN signals from the WTs such as to enable coherent combining at some predetermined WWAN terminal.

An optional transmitter embodiment of the invention may employ synchronization to deliberately time-offset signals arriving at one or more WWAN terminals in order to provide for transmit diversity by the WTs. In such embodiments, one or more of the WT transmissions may be provided with time-varying complex weights (e.g., amplitudes and/or phases), such as described in S. A. Zekavat, C. R. Nassar and S. Shattil, "Combined Directionality and Transmit Diversity via Smart Antenna Spatial Sweeping," proceedings of 38th *Annual Allerton Conference on Communication, Control, and Computing, University of Illinois in Urbana-Champaign*, pp. 203-211, Urbana-Champaign, Ill., USA, October 2000, S. A. Zekavat, C. R. Nassar and S. Shattil, "Smart antenna spatial sweeping for combined directionality and transmit diversity," *Journal of Communications and Networks* (*JCN*), *Special Issue on Adaptive Antennas for Wireless Communications*, Vol. 2, No. 4, pp. 325-330, December 2000, and S. A. Zekavat, C. R. Nassar and S. Shattil, "Merging multi-carrier CDMA and oscillating-beam smart antenna arrays: Exploiting directionality, transmit diversity and frequency diversity," *IEEE Transactions on Communications*, Vol. 52, No. 1, pp. 110-119, January 2004, which are incorporated by reference herein.

In an alternative embodiment of the invention, providing WWAN access information **1140** may include providing WWAN channel-performance information from the WTs to at least one WWAN terminal. Thus, conveying WWAN information to the WTs **1142** may be performed by at least one WWAN terminal. An optional embodiment of the invention may provide for at least one WWAN terminal determining which WTs in a WLAN group will operate in a given WWAN link and conveying that WWAN information **1142** to the WLAN group. Embodiments of the invention may

provide capabilities to WWAN terminals to set up and adapt the formation of WLAN groups and determine which WTs are assigned to which WLAN groups. Such control capabilities may employ GPS positions of WTs to assist in assigning WTs to a WLAN group. Some embodiments of the invention may provide for collaboration between a WWAN and a WLAN group for activating WTs and/or assigning WTs to the WLAN group.

In one embodiment of the invention, step **1142** may include a preliminary signal-processing step (not shown) in which at least one WWAN terminal calculates cooperative-beamforming weights for the WTs based on channel-performance information provided by the WTs. Accordingly, the WWAN information may include cooperative-beamforming weights derived by at least one WWAN terminal and conveyed to at least one WT. Synchronization **1143** of the transmitted and/or received WWAN signals by the WTs may optionally be performed by at least one WWAN terminal. Similarly, embodiments of the invention may provide for applying time-varying weights to WWAN-terminal transmissions (such as described previously).

FIG. **4**D illustrates a functional embodiment of the invention adapted to perform cooperative beamforming. WWAN channel information is provided **1144** for assigning subchannels **1145** and calculating cooperative beamforming (i.e., WT) weights **1146**. The beamforming weights are then distributed to the appropriate WTs **1147**.

Sub-channel assignments **1145** are typically performed with respect to a predetermined subchannel-quality threshold, such as SNR, SINR, or BER. Subchannels having the required minimum performance may be assigned for transmission and/or reception. Sub-channel assignments **1145** may also provide for bit loading. Alternatively, sub-channel assignments **1145** may be performed without regard to sub-channel quality. In such cases, spreading or channel coding may be performed to mitigate the effects of lost and compromised subchannels.

Weight calculations **1146** may be achieved by either deterministic or blind adaptive techniques. The calculations may be performed by one or more WTs, or alternatively, by at least one WWAN terminal. Cooperative beamforming weights may be provided to achieve at least one form of array processing benefit, including diversity combining, interference cancellation, and spatial reuse.

FIG. **5**A illustrates a functional embodiment of the invention that may be implemented by hardware and/or software. A plurality of transmitted WWAN signals are received **1150** by a plurality of WTs. Baseband (or IF) WWAN information is derived 1151 from the received WWAN signals. For example, in an OFDM system, a baseband WWAN signal s_k received by a kth WT can be represented by a linear superposition of up to M transmitted data symbols d_i $\{i=1, \ldots, M\}$ weighted by complex channel weights α_{ik}:

$$s_k = \sum_{i=1}^{M} \alpha_{ik} d_i + \eta_k$$

Baseband WWAN signals (which typically include the complex channel weights α_{ik}), are optionally transmitted **1158** into a WLAN for distribution to one or more other WTs. Accordingly, data (including baseband WWAN signals s_k, complex channel weights α_{ik}, and/or MIMO weights β_{il}) from the one or more other WTs is received **1152** from the WLAN. MIMO processing **1153** may be performed to produce at least one set of MIMO weights β_{il} and/or estimated transmitted data symbols d_i, which may optionally be transmitted **1159** to at least one other WT via the WLAN. Baseband information recovery **1154** may optionally be performed on the estimated transmitted data symbols d_i. For example, baseband operations may include despreading, demodulation, error correction (e.g., channel decoding), demultiplexing, de-interleaving, data formatting, etc.

FIG. **5**B illustrates an alternative functional embodiment of the invention that may be implemented by hardware and/or software. In this case, WWAN baseband information that does not include MIMO weights may be received **1155** from at least one other WT via the WLAN. Thus, MIMO processing **1153** includes generating MIMO weights, which may be transmitted **1159** to one or more WTs via the WLAN. The functional embodiment illustrated in FIG. **5**B is particularly applicable to a WT functioning as a computer-processing terminal in a WLAN group. In the case where the subject WT functions as the only MIMO-processing terminal in a given WLAN group, the functional embodiment may be characterized solely by steps **1155**, **1153**, **1154**, and optional step **1159**. Furthermore, the functional embodiments described herein may be adapted to perform other array-processing operations in addition to, or instead of, MIMO.

FIG. **6**A illustrates functional and apparatus embodiments of the present invention pertaining to one or more WTs, such as WT **1109**. In particular, a WWAN interface **1161** may be coupled to a beam-forming system **1162**, which is coupled to a WLAN interface **1163**. The beam-forming system **1162** may employ data received from the WLAN interface **1163** (and optionally, from data received from the WWAN interface **1161**) to perform beam-forming operations. The WLAN interface **1163** is adapted to provide WLAN data communications with at least one other WT (not shown). The beam-forming system **1162** may be adapted to provide either or both WWAN transmission beam-forming and reception beam-forming operations.

FIG. **6**B illustrates a preferred embodiment of the invention that may be employed as either or both apparatus and functional embodiments. A WWAN interface **1161** includes an RF front-end **1611**, a DAC/ADC module **1612**, a pulse-shaping filter **1613**, a modulator/demodulator module **1614**, an equalizer modulator **1615** that optionally employs pre-equalization means, a multiplexer/demultiplexer module **1616**, and a baseband-processing module **1617**. The WWAN interface may also include a network-control module **1618** that may be responsive to both WWAN control signaling and WLAN-control signals configured to convey WWAN control information to the WWAN interface **1161**.

A WLAN interface **1163** includes an RF front-end **1631**, a DAC/ADC module **1632**, a pulse-shaping filter **1633**, a modulator/demodulator module **1634**, an equalizer modulator **1635** that optionally employs pre-equalization means, a multiplexer/demultiplexer module **1636**, and a baseband-processing module **1637**. A beam-forming module **1162** is adapted to process signals from either or both baseband modules **1617** and **1637**. The beam-forming module **1162** may be adapted to process local data symbols generated by a local data source **1160**.

As described previously, the beam-forming module **1162** may be adapted to perform beam-forming operations on baseband WWAN signals received from either or both the WWAN interface **1161** and the WLAN interface **1163**. Specifically, the beam-forming module **1162** may be adapted to perform beam forming by utilizing baseband WWAN signals, channel weights (or other channel-characterization

information), beam-forming weights (such as MIMO weights), and/or baseband data symbols. Baseband data symbols may be received from the local data source **1160**, from local data sources on other WTs, and/or from estimated data generated by one or more external beam-forming modules (e.g., beam-forming modules on other WTs). Optionally, the beam-forming module **1162** may be configured to adjust equalization and/or pre-equalization **1615**.

In an exemplary embodiment of the invention, the beam-forming module **1162** is configured to process baseband WWAN signals received from the baseband-processing module **1617** and the WLAN interface **1163**. Information output from the beam-forming module **1162** is conveyed to at least one of the WLAN interface **1163** and a local data sink **1169**. Estimated WWAN data symbols output by the beam-forming module **1162** may optionally be processed by the baseband-processing module **1617** or the local data sink **1169**. For example, the baseband-processing module **1617** may be configured to perform various types of signal processing, including error correction (such as Viterbi decoding), constellation mapping, and data formatting on data output by the beam-forming module **1162**. The resulting processed data may then be coupled to the local data sink **1169** and/or the WLAN interface **1163**. Alternatively, the local data sink **1169** may perform the previously described signal-processing types.

Beam forming is performed cooperatively with other WTs to provide predetermined WWAN spatial processing for transmitted and/or received WWAN signals. Thus, a network-function adapter **1165** may be employed to provide WWAN channel-access information to one or more WTs. For example, some embodiments of the invention require multiple WTs to function as a single WT. In this case, each WT is provided with WWAN-access information corresponding to the single WT it is configured to spoof. The network function adapter **1165** may be configured to generate WWAN-access information to be distributed to at least one other WT and/or it may be configured to receive WWAN-access information from the WLAN interface **1163** and convey it to the network-control module **1618** in the WWAN interface **1161**.

WWAN-access information typically includes channelization (or some other form of multiple access) information used to transmit and/or receive data from the WWAN. For example, WWAN-access information may take the form of user identification sequences, assigned time slots, frequency band assignments, and/or multiple-access code assignment.

In some embodiments of the invention, a particular WT may be required to function as multiple WTs. In this case, WWAN-access information is conveyed to the network-control module **1618** and data is configured to be appropriately multiplexed and/or demultiplexed relative to a plurality of multiple-access channels.

The network-function adapter **1165** may be used to convey other WWAN control information to WTs, including (but not limited to) power-control commands, timing and synchronization information, key-exchange messages, WWAN routing tables, acknowledgements, requests for retransmission, probing signals, and paging messages. The network-function adapted **1165** may be configured to alter or adapt the WWAN-control information that it receives from either or both the WWAN interface **1161** and the WLAN interface **1163**. For example, WWAN power-control commands received by one or more WTs may be adapted by the network-function adapter **1165** prior to being conveyed to network-control modules (such as network-control module **1618**) on multiple WTs. Power control may be adapted by one or more network-function adapters **1165** for particular WTs depending on their WWAN channel quality and power. Alternatively, the network-function adapter **1165** may adapt the number M of WTs servicing a given link in response to WWAN control information.

In some embodiments of the invention, it may be advantageous to employ a single decision system for network-function adaptation **1165**. In one mode of operation, the network-function adapter **1165** of only one of a plurality of WTs assigned to a particular WWAN channel is adapted to convey WWAN control information to the other WTs. In each of the other WTs, the associated network-function adapter **1165** identifies the WWAN control information received from the WLAN and couples it to the network-control module **1618**. Thus, the network-function adapter **1165** may instruct the network-control module **1618** to disregard one or more types of WWAN control information received from the WWAN interface **1161**. One or more network-function adapters (such as network-function adapter **1165**) may synchronize WT responses to WWAN control information.

In another embodiment of the invention, each WT may be responsive to WWAN control information that it receives. In yet another embodiment, each of a plurality of WWAN multiple-access channels is preferably controlled by a separate network-function adapter **1165**. These and other adaptations and permutations of network function may be embodied by functional aspects of the network-function adapter **1165**.

One embodiment of the invention employs the functionality of a group of WTs corresponding to FIG. **1**C with respect to the transceiver embodiment shown in FIG. **6**B. In a transmission configuration, a serial data stream s(n) from the local data source **1160** of a particular WT is channel coded to produce coded data stream u(n), which is grouped in blocks of size N: $u(i)=[u(iN), u(iN+1), \ldots, u(iN+N-1)]^T$. In this case, Nis chosen to equal the number M of WTs employed as antenna elements. The N−1 coded data symbols u(n) are distributed to the other N−1 WTs via the WLAN interface **1163**.

At each WT's Mux/DeMux block **1615**, a particular data symbol u(n) is mapped into a frequency bin vector. In one aspect of the invention, each data symbol u(n) is provided with both a unique frequency bin and a unique WT, such as to achieve optimal diversity benefits. This takes the form of a frequency-bin vector having all zeros except for one bin corresponding to u(n). This scheme can be used to achieve low transmitted PAPR, as well as other benefits. In other embodiments, alternative WT/frequency-bin combinations may be employed. For example, multiple serial data streams s(n) may be provided to the frequency-bin vector. Redundant symbols may be provided.

Alternatively, the data s(n) may be spread across frequencies and/or WTs.

At each Mod/DeMod block **1614**, an IFFT is applied to each data block to produce:

$$u(i)=F^H u(i)$$

where F is the N×N FFT matrix with $F_{nm}=N^{-1/2}\exp(-j2\pi nm/N)$. A cyclic prefix of length N_{CP} may be inserted in $\tilde{u}(i)$ to produce $\tilde{u}_{CP}(i)=\beta T_{CP}\tilde{u}(i)$, which has length $N_T=N+N_{CP}$. The term $T_{CP}=[I_{CP}{}^T I_N{}^T]^T$ represents the cyclic prefix insertion in which the last N_{CP} rows of the N×N identity matrix I_N (denoted by I_{CP}) are concatenated with identity matrix I_N. The term β is the power loss factor, $\beta=\sqrt{N/N_T}$.

The block $\tilde{u}_{CP}(i)$ is serialized to yield $\tilde{u}_{CP}(n)$, which is then pulse shaped **1613**, carrier modulated **1612**, amplified,

and transmitted **1611** via multiple antenna elements through a channel. The channel impulse response h(n) includes the effects of pulse shaping, channel effects, receiver filtering, and sampling.

In a receiver configuration of the invention, each of a plurality of WTs is adapted to receive a different transmitted symbol on a different orthogonal carrier frequency. For a WT employing a square-root Nyquist receive filter, the received samples are expressed by:

$$x(n)=\tilde{u}_{CP}(n)*h(n)+v(n)$$

where v(n) is additive white Gaussian noise (AWGN). The received samples are grouped into blocks of size N_T:$x_{CP}(i)=[x(iN_T), x(iN_T+1), \ldots, x(iN_T+N_T-1)]^T$. The first N_{CP} values of $x_{CP}(i)$ corresponding to the cyclic prefix are discarded, which leaves N-length blocks expressed by: $x(i)=[x(iN_T+N_{CP}), x(iN_T+N_{CP}+1), \ldots, x(iN_T+N_T-1)]^T$. H is defined as an N×N circulant matrix with $\tilde{H}_{n,m}=h((n-m)_{mod\ N})$. The block input-output relationship is expressed as: $\tilde{x}(i)=\beta\tilde{H}\tilde{u}(i)+\tilde{\eta}(i)$, where $\tilde{\eta}(i)=[v(iN_T+N_{CP}), v(iN_T+N_{CP}+1), \ldots, v(iN_T+N_T-1)]^T$ is the AWGN block. Applying the FFT to $\tilde{x}(i)$ yields:

$$x(i)=F\tilde{x}(i)=\beta F\tilde{H}F^H u(i)+\tilde{\eta}(i)$$

$$=\beta D_H u(i)+\eta(i)$$

where

$$D_H=\mathrm{diag}[H(e^{j0}),H(e^{j(2\pi/N)}), \ldots H(e^{j(2\pi(N-1)/N)})]=F\tilde{H}F^H$$

and $H(e^{j2\pi f})$ is the frequency response of the ISI channel;

$$H(e^{j2\pi f})=\sum_{n=0}^{N_{CP}} h(n)e^{-j2\pi fn}.$$

An equalizer followed by a decoder uses x(i) to estimate the data symbols encoded on u(i).

Preferred embodiment of the invention may employ Spread-OFDM, which involves multiplying each data block s(n) by a spreading matrix A:

$$u(n)=As(n)$$

In the case where CI spreading codes are employed, $A_{nm}=\exp(-j2\pi nm/N)$. This maps the data symbols to pulse waveforms positioned orthogonally in time. This choice of spreading codes also gives the appearance of reversing the IFFT. However, the resulting set of pulse waveforms is a block, rather than a sequence, wherein each waveform represents a cyclic shift within the block duration T_s, such as described in U.S. Pat. Appl. Pubs. 20030147655 and 20040086027, which are both incorporated by reference.

FIG. **7**A illustrates a functional embodiment of the invention related to calculating MIMO weights in a cooperative-beamforming network. A plurality of WTs provide received baseband information from a WWAN channel **1701** that includes a training sequence and/or a data sequence having a predetermined constellation of values. WWAN MIMO processing is performed **1702** on the received baseband information to derive a plurality of array-processing weights β_i, which are then distributed **1703** via the WLAN to a predetermined plurality of WTs.

FIG. **7**B illustrates a functional embodiment of the invention adapted to calculate transmitted data symbols received by a cooperative-beamforming network. A plurality of WTs provide received baseband information from a WWAN channel **1701** that includes a data sequence having a predetermined constellation of values. WWAN MIMO processing may be performed **1704** on the received baseband information to derive a plurality of estimated data symbols d_i, which are then conveyed **1705** via the WLAN to at least one destination WT. The WWAN MIMO processing **1704** may optionally include providing for any of a set of signal-processing operations, including filtering, demodulation, demultiplexing, error correction, and data formatting.

FIG. **8**A illustrates a functional embodiment for a method and apparatus of the invention. Specifically, a data source **1800** is adapted to distribute a plurality of data symbols via a WLAN channel **199** to a plurality N_t of WTs **1806.1-1806**.N_t, which are adapted to transmit the data symbols into at least one WWAN channel **99**. Although the functional embodiment shown in FIG. **8**A is illustrated with respect to uplink WWAN functionality, the functional blocks may alternatively be inverted to provide for downlink WWAN functionality.

The data source and the WTs **1806.1-1806**.N_t include appropriate WLAN-interface equipment to support distribution of the data symbols to the WTs **1806.1-1806**.N_t. For example, the WTs **1806.1-1806**.N_t are shown including WLAN-interface modules **1801.1-1801**.N_t. The WLAN channel **199** may optionally include additional network devices that are not shown, such as routers, access points, bridges, switches, relays, gateways, and the like. Similarly, the data source **1800** and/or the WTs **1806.1-1806**.N_t may include one or more said additional network devices. The data source **1800** may include at least one of the WTs **1806.1-1806**.N_t.

A coder **1803.1-1803**.N_t in each of the WTs **1806.1-1806**.N_t is adapted to receive a baseband data sequence from the associated WLAN-interface module **1801.1-1801**.N_t and provide coding, such as channel coding, spreading, and/or multiple-access coding. A coded data sequence output from each coder **1803.1-1803**.N_t is mapped into frequency bins of multicarrier generators, such as IDFTs **1804.1-1804**N_t. This embodiment may be employed to produce multicarrier signals or to synthesis single-carrier signals from a plurality of spectral components. Alternatively, other types of multicarrier generators may be employed, such as quadrature-mirror filters or DSPs configured to perform other transform operations, including Hadamard transforms. The resulting multicarrier signals are coupled into the WWAN channel **99** by associated WWAN-interface modules **1805.1-1805**.N_t.

For each flat-fading subcarrier frequency channel, the WWAN channel may be characterized by channel responses 1890.1-1890-N_t and 1899.1-1899-N_t of a mixing system. The channel responses 1890.1-1890-N_t and 1899.1-1899-N_t represent elements of H, an $N_r \times N_t$ channel-response matrix that characterizes the complex gains (i.e., transfer function, or spatial gain distribution) from the N_t transmission elements to the N_r receive elements; and $n_i(n)$ represents an AWGN contribution having zero mean and zero variance.

There are N_r receiver elements comprising WWAN-interface modules **1815.1-1815**.N_r and filter banks, such as DFTs **1814.1-1814**.N_r, coupled to at least one MIMO combiner **1810**. The MIMO combiner **1810** is adapted to perform any number of signal-processing operations, including decoding received data symbols. In one embodiment of the invention, the MIMO combiner **1810** is adapted to perform diversity combining. In another embodiment of the invention, the MIMO combiner **1810** is adapted to perform spatial (e.g., sub-space) processing. Furthermore, many other applica-

tions and embodiments of the invention may be achieved using the functional description (or minor variations thereof) depicted in FIG. **8**A.

FIG. **8**B illustrates a functional embodiment of the invention that may be incorporated into specific apparatus and method embodiments. In particular, WWAN signals received from a WWAN channel **99** by a plurality N_r of WTs **1836.1-1836**.N_r are conveyed via a WLAN channel **199** to a MIMO combiner **1830**.

In this case, WWAN data symbols are encoded by one or more coders (such as coders **1821.1-1821**.N_t), impressed on a plurality of subcarriers by IDFTs **1822.1-1822**.N_t, and coupled into the WWAN channel **99** by a plurality of WWAN-interface modules **1825.1-1825**.N_t. Received WWAN signals may be coupled from the WWAN channel **99** by a plurality N_r of WTs **1836.1-1836**.N_r. Each WT **1836.1-1836**.N_r includes at least one WWAN-interface module (such as WWAN-interface modules **1831.1-1831**.N_r), a filter bank (such as DFTs **1834.1-1834**.N_r), and a WLAN-interface module (such as **1835.1-1835**.N_r).

WWAN signals received by each WT **1836.1-1836**.N_r are converted to a baseband data sequence, separated into frequency components (by the DFTs **1834.1-1834**.N_r), and then adapted for transmission into the WLAN channel **99**. A MIMO combiner **1830** may be configured to receive WLAN transmissions, recover the frequency components, and perform MIMO processing to generate estimates of the transmitted WWAN data symbols. The MIMO combiner **1830** and/or the WTs **1836.1-1836**.N_r may be adapted to perform decoding. In one embodiment of the invention, the MIMO combiner **1830** may include one or more of the WTs **1836.1-1836**.N_r.

FIG. **8**C illustrates an embodiment of the invention in which WTs **1836.1-1836**.N_r are adapted to perform time-domain (e.g., Rake) processing. Specifically, each WT **1836.1-1836**.N_r includes a Rake receiver **1854.1-1854**.N_r. The embodiment illustrated in FIG. **8**C is particularly suited to performing MIMO operations on received direct-sequence signals, such as direct sequence CDMA (DS-CDMA) signals.

Particular embodiments of the invention may be directed toward transmitting and/or receiving any of the well-known types of spread signals. Spread signals include spread-spectrum signals in which a transmitted signal is spread over a frequency band much wider than the minimum bandwidth needed to transmit the information being sent. Spread spectrum includes direct-sequence modulation commonly used in CDMA systems (e.g., cdmaOne, cdma2000, 1×RTT, cdma 1×EV-DO, cdma 1×EV-DV, cdma2000 3×, W-CDMA, Broadband CDMA, and GPS), as well as frequency-domain spreading techniques, such as spread-OFDM, multi-carrier CDMA, and multi-tone CDMA.

In a DS-CDMA system, a kth WWAN transmission signal $s^k(t)$ that includes N code bits $\{b^k[n]\}_{n=1}^{N}$ is given by:

$$s^k(t) = \sum_{n=0}^{N-1} b^k[n] g_{T_b}(t - nT_b) g_\tau(t) a^k(t - iT_b) \cos(2\pi f_c t)$$

where

$$a^k(t) = \sum_{i=0}^{G-1} C_i^k g_{T_c}(t - iT_c),\ C_i^k \in \{-1, 1\}$$

is the DS spreading signal, G represents processing gain, T_c is the chip duration, T_b is the bit duration, and $g_{T_c}(t)$, $g_{T_b}(t)$, and $g_\tau(t)$ represent the chip, bit, and transmitted pulse shapes, respectively.

A plurality M of WTs linked together by a WLAN comprises elements of an M-element antenna array capable of receiving K≤M transmission channels. In a frequency-selective channel, the received signal at the array is:

$$r(t) = \sum_{k=1}^{K} \sum_{l=0}^{L^k-1} \sum_{n=0}^{N-1} \alpha_l^k \vec{V}(\vartheta_l^k) b_k[n] g(t - \tau_l^k - nT_b) \cos(2\pi f_c t + \varphi_l^k) + \upsilon(t)$$

where $\vec{V}(\varepsilon)$ is an array-response vector, K is the number of received transmission channels, L^k is the number of distinct fading paths corresponding to the kth user, α_l^k is the fade amplitude associated with path l and user k, φ_l^k=U[0,2π] represents the associated fade phase, τ_l^k is the path time-delay (which occurs below a predetermined duration threshold T_{max}), and ϑ_l^k denotes angle of arrival. The array response vector $\vec{V}(\vartheta)$ is expressed by:

$$\vec{V}(\vartheta) = [1\ e^{-2\pi d_1 \cos\theta/\lambda} \ldots e^{-2\pi d_{M-1} \cos\theta/\lambda}]$$

where d_m is the antenna separation, and λ is the wavelength corresponding to carrier frequency f_c. For a jth user's l^{th} path, the nth bit at the beamformer output is given by:

$$z_l^j[n] = W^{\#H}(\varepsilon_l^k) \int_{+(n-1)T_b}^{+nT_b} r(t) \cos(2\pi f_c t + \varphi_l^j) a^j (t - \tau_l^j - (n-1)T_b) dt$$

where $W(\vartheta_l^k)$ is the weighting vector of the beamforming system. $z_l^k[n]$ can be expressed by four components:

$$z_l^k[n] = S_l^j[n] + ISI_l^j[n] + IXI_l^j[n] + \upsilon_l^j[n]$$

where S is the desired signal, ISI is inter-symbol interference, IXI is cross interference (i.e., multiple-access interference), and ν is the AWGN contribution. These components can be expressed as follows:

$$S_l^k[n] = \alpha_l^j W^{\#H}(\vartheta_l^j) \vec{V}(\vartheta_l^j) b^j[n] G$$

$$ISI_l^j[n] = \sum_{\substack{h=0 \\ h \neq l}}^{L^k-1} \sum_{n=0}^{N-1} \alpha_l^k W^H(\vartheta_h^j) \vec{V}(\vartheta_l^k) b^j[n] \cos(\varphi_h^j - \varphi_l^j) R_{jj}(\tau_h^j - \tau_l^j - nT_b)$$

$$IXI_l^j[n] = \sum_{\substack{k=1 \\ k \neq j}}^{K} \sum_{\substack{h=0 \\ h \neq l}}^{L^k-1} \sum_{n=0}^{N-1} \alpha_l^k W^H(\vartheta_h^k) \vec{V}(\vartheta_l^j) b^j[n] \cos(\varphi_h^k - \varphi_l^j) R_{kj}(\tau_l^j - \tau_h^k - nT_b)$$

$$\upsilon_l^j[n] = \int_{+(n-1)T_b}^{+nT_b} W^{\#H}(\vartheta_l^j) n(t) a^j(t - \tau_l^j) \cos(2\pi f_c t + \varphi_l^j) dt$$

where $W^H(\vartheta_l^j)\vec{V}(\vartheta_l^j)$ represents the spatial correlation, φ_l^j and τ_l^j are the random phase and time delay for the jth user's l^{th} path, G is the processing gain, and R_{jj} and R_{kj} are the partial auto-correlation and cross-correlation of the direct sequence code(s):

$$R_{kj}(\tau) = \int_\tau^T a^k(t) a^j(t - \tau) dt$$

Maximal ratio combining produces an output:

$$z^j[n] = \sum_{l=0}^{L-1} \alpha_l^j z_l^j[n]$$

which can be processed by a decision processor. In this case, the BER is given by:

$$P_e = \int_0^\infty Q(2r_o) f(r_o|\bar{r}_o) dr_o$$

where $\bar{r}_o$ is the mean value of the instantaneous SINR, r_o, and Q( ) represents the complementary error function.

It should be appreciated that the WTs may be adapted to perform either or both time-domain (e.g., Rake) or frequency-domain processing as part of a receiver operation. Signals received by a plurality of WTs may be combined with respect to any combining technique, including EGC, MRC, Minimum Mean Squared Error Combining, other types of optimal combining, Successive Interference Cancellation, and other matrix-reduction/matrix diagonalization techniques. Array-processing operations may include combinations of local and global processing. For example, diversity combining may be performed at each multi-element WT. Then signals from each WT may be combined (e.g., in a central processor) to perform sub-space (e.g., directional) processing. Other combinations of local and global processing may be employed. Similarly, combinations of sub-space processing (i.e., capacity enhancement) and diversity combining (i.e., signal-quality enhancement) may be performed. It should also be appreciated that the WTs may be adapted to perform either or both time-domain and frequency-domain processing for transmission. Thus, appropriate delays or complex weights may be provided to WT transmissions to produce a coherent phase front that converges at a predetermined WWAN destination node.

FIG. **9**A illustrates an optional transmission embodiment of the present invention. That is, method and apparatus configurations can be inferred from the following descriptions. A data source **1900** is adapted to provide data for processing by an array processor, such as MIMO processor **1902**. Optionally, other types of array processors may be provided. A physical (e.g., wired) connection **1902** and/or a wireless connection **1901** couple the data between the data source **1900** and the MIMO processor **1902**. The wireless connection **1901** is enabled by a WLAN **1999**. The MIMO processor **1902** is adapted to provide MIMO processing to the data, such as providing complex channel weights, providing spreading weights, and/or providing channel coding.

In one exemplary embodiment of the invention, MIMO processor **1902** provides convolutional or block channel coding to the data, which effectively spreads each data bit over multiple coded data bits. The resulting coded data bits are then grouped in serial blocks by the MIMO processor **1902**. Signal-block outputs from the MIMO processor **1902** are provided with serial-to-parallel conversion by the WLAN **1999** (which is denoted by S/P **1914**) and distributed to a plurality of WTs **1906**.**1**-**1906**.M.

Each WT **1906**.**1**-**1906**.M has a WLAN interface **1907**.**1**-**1907**.M adapted to receive and demodulate the data received from the MIMO processor **1902**. The MIMO processor **1902** is accordingly equipped with a WLAN interface that is not shown. The MIMO processor **1902** is typically comprised of one or more WTs **1906**.**1**-**1906**.M. In some embodiments of the invention, MIMO processor **1902** may include at least one computer-processing terminal that does have a WWAN interface.

Data received from the MIMO processor **1902** is then modulated **1908**.**1**-**1908**.M by each WT **1906**.**1**-**1906**.M for transmission into a WWAN channel by a corresponding WWAN interface **1909**.**1**-**1909**.M. Modulation **1908**.**1**-**1908**.M typically includes mapping blocks of data bits to data symbols, which are then mapped to a modulation constellation. Modulation **1908**.**1**-**1908**.M may also include channel coding and/or data interleaving. In an exemplary embodiment of the invention, modulation **1908**.**1**-**1908**.M includes the application of complex WWAN channel weights. Such channel weights may optionally be provided by the MIMO processor **1902**. In alternative embodiment of the invention, modulators **1908**.**1**-**1908**.M provide a predetermined delay profile (provided by the MIMO processor **1902**) to the data to be transmitted into the WWAN channel.

FIG. **9**B illustrates a functional flow chart that pertains to transmitter apparatus and method embodiments of the invention. One or more data sources **1920**.**1**-**1920**.K are coupled via a WLAN **1999** to a plurality M of WTs **1926**.**1**-**1926**.M. Each WT **1926**.**1**-**1926**.M includes a WLAN interface **1927**.**1**-**1927**.M, an array processor (such as a MIMO processor **1926**.**1**-**1926**.M), and a WWAN interface **1929**.**1**-**1929**.M.

The data sources **1920**.**1**-**1920**.K optionally include baseband-processing capabilities, such as channel coding, interleaving, spreading, multiplexing, multiple-access processing, etc. The data sources **1920**.**1**-**1920**.K include WLAN interfaces (not shown). The data sources **1920**.**1**-**1920**.K may include one or more WTs **1926**.**1**-**1926**.M.

The WLAN interfaces **1927**.**1**-**1927**.M include apparatus and means for converting received signals that were formatted for transmission in the WLAN **1999** into baseband data signals. The MIMO processors **1926**.**1**-**1926**.M are adapted to provide for frequency-domain and/or time-domain MIMO operations on the baseband data signals received from the WLAN interfaces **1927**.**1**-**1927**.M. Alternatively, the MIMO processors **1926**.**1**-**1926**.M may be adapted to perform phase operations at WWAN carrier frequencies transmitted by the WWAN interfaces **1929**.**1**-**1929**.M. The WWAN interfaces **1929**.**1**-**1929**.M provide any necessary baseband, IF, and RF operations necessary for transmitting data in a WWAN channel.

FIG. **10**A illustrates software components of a transmission embodiment of the invention residing on a computer-readable memory **1950**. An array-processing weighting source-code segment **1951** is adapted to generate a plurality of array-element weights for an antenna array comprised of a plurality of WTs coupled to at least one WWAN. The array-element weights may include at least one of frequency-domain weights (e.g., complex sub-carrier weights) and time-domain weights (e.g., weighted Rake taps). The array-processing weighting source-code segment **1951** is adapted to accept as input at least one of a set of information inputs, including data signals for transmission into the WWAN, training signals (e.g., known transmission symbols) received from the WWAN, data signals (e.g., unknown transmission symbols) received from the WWAN, WWAN channel estimates, and WWAN-control information.

The array-processing weighting source-code segment **1951** is adapted to provide as output at least one of a set of information signals, including WWAN weights and weighted data for transmission into the WWAN (i.e., weighted WWAN data). A WLAN distribution source code segment **1952** is provided for distributing either or both WWAN weights and weighted WWAN data received from source-code segment **1951** to a plurality of WTs via at least one WLAN. The WLAN distribution source code segment

1952 may optionally function to couple at least one of a set of information inputs to the source-code segment 1951, including data signals for transmission into the WWAN (such as generated by other WTs), training signals received from the WWAN, data signals received from the WWAN, WWAN channel estimates, and WWAN-control information.

FIG. 10B illustrates software components of a receiver embodiment of the invention residing on a computer-readable memory 1960. An array-processing weighting source-code segment 1961 is adapted to generate a plurality of array-element weights for an antenna array comprised of a plurality of WTs coupled to at least one WWAN. The array-element weights may include at least one of frequency-domain weights (e.g., complex sub-carrier weights) and time-domain weights (e.g., weighted Rake taps). The array-processing weighting source-code segment 1961 is adapted to accept as input at least one of a set of information inputs, including training signals (e.g., known transmission symbols) received from the WWAN, data signals (e.g., unknown transmission symbols) received from the WWAN, WWAN channel estimates, and WWAN-control information.

The array-processing weighting source-code segment 1961 is adapted to provide as output at least one of a set of information signals, including WWAN weights, weighted received WWAN data for transmission into the WLAN (i.e., weighted received WWAN data), weighted WWAN data received from a plurality of WTs connected by the WLAN and then combined (i.e., combined weighted WWAN data), and estimates of said combined weighted WWAN data. A WLAN distribution source code segment 1962 is provided for distributing at least one of a set of signals (including the WWAN weights, the weighted received WWAN data, the combined weighted WWAN data, and the estimates said combined weighted WWAN data) to a plurality of WTs via at least one WLAN. The WLAN distribution source code segment 1962 may optionally function to couple at least one of a set of information inputs to the source-code segment 1961, including WWAN data signals received by other WTs, training signals received from the WWAN by other WTs, WWAN channel estimates (either of both locally generated and received from other WTs), WWAN-control information, weights received from at least one other WT, and weighted WWAN data received from at least one other WT.

Since software embodiments of the invention may reside on one or more computer-readable memories, the term computer-readable memory is meant to include more than one memory residing on more than one WT. Thus, embodiments of the invention may employ one or more distributed-computing methods. In one embodiment of the invention, the computer-readable memory 1950 and/or 1960 further includes a distributed-computing source-code segment (not shown). It will be appreciated that many different types of distributed computing, which are well known in the art, may be performed. The WLAN distribution source code segment 1952 and/or 1962 may be adapted to provide for synchronizing transmitted and/or received WWAN signals.

Embodiments of the invention described herein disclose array-processing methods (including software implementations) and apparatus embodiments employed in a WWAN and coordinated between a plurality of WTs connected via at least one WWAN. WTs in a WLAN group typically share the same WWAN access. However, some embodiments of the invention provide for WTs with access to different WWANs. Furthermore, one or more WTs may have access to a plurality of WWANs and WWAN services. In some cases, one or more WTs may not be configured to access any WWAN.

In some embodiments of the invention, the computer-readable memory 1950 and/or 1960 further includes a WLAN setup source-code segment (not shown) capable of establishing and/or dynamically reconfiguring at least one WLAN group. For example, WTs may convey location information (e.g., GPS) and/or signal-strength information (e.g., in response to a WLAN probing signal) to the WLAN setup source-code segment (not shown). The WLAN setup source-code segment (not shown) may reside on one or more of the WTs and/or at least one WWAN terminal, such as a cellular base station.

The WLAN setup source-code segment (not shown) may provide one or more WLAN group configuration functions, including determining the number of WWAN-enabled WTs, the total number of WTs in the WLAN group, which WTs are active (and inactive), which WTs are in the WLAN group, and selecting which WT(s) has (have) network-control functionality. The WLAN setup source-code segment (not shown) may be adapted to perform WWAN channel quality analysis functions, including determining WWAN link performance (relative to one or more WTs) from training sequences or pilot signals, performing WWAN-channel estimation, receiving link performance or channel estimates from the WWAN, and performing channel-quality calculations (e.g., SNR, BER, PER, etc.).

The WLAN setup source-code segment (not shown) may select which WTs are WWAN-enabled based on one or more criteria points, including WWAN link performance, WLAN link performance, required transmission and/or reception needs (e.g., the number of WLAN-group WTs requesting WWAN services, the types of WWAN services required, individual and total throughput, required signal-quality threshold, and WWAN bandwidth available to the WLAN group), computational load, WLAN capacity, power-consumption load, diversity gain, and interference mitigation.

The WLAN distribution source code segments 1952 and 1962 may be adapted to route WWAN channel-access information to the WTs. For example, WWAN channel-access information can include multiple-access information (e.g., multiple-access codes, frequency bands, time slots, spatial (or sub-space) channels, etc.), power control commands, timing and synchronization information, channel coding, modulation, channel pre-coding, and/or spread-spectrum coding.

FIG. 11 shows a WWAN comprising a WWAN access point (e.g., a base station) 2120 and a local group 2100 comprising a plurality of wireless terminals (WTs) 2101-2104 communicatively coupled together via a WLAN 2105. A network-management operator 2106 is configured to handle WWAN-control operations within the local group 2100. In an exemplary embodiment, the network-management operator 2106 is coupled to at least one of the WTs 2101-2104 (e.g., WT 2103). One or more of the WTs 2101-2104 may be configured to transmit and/or receive WWAN communication signals, such as WWAN traffic channels 2110 and WWAN control messages 2111. Signals in the WWAN traffic channels 2110 may be processed by one or more of the WTs 2101-2104, which may include at least one local area network controller (e.g., 2103). The WWAN control messages 2111 are processed by the network-management operator 2106.

In an exemplary embodiment of the invention, a target WT (e.g., WT 2104) communicates with one or more WTs in the local group 2100 via the WLAN 2105, and the local

group **2100** is configured to communicate with the base station **2120** via the WWAN. More specifically, one or more of the WTs **2101-2104** may be configured to participate in WWAN communications at any particular time. The target WT **2104** may communicate with the network controller (e.g., WT **2103**), which is configured to communicate with other WTs in the local group **2100**. The network controller **2103** typically oversees network control functions in the local area network. Alternatively, the target WT **2104** may function as a local area network controller. A particular WT may determine which WTs to use for transmitting and/or receiving signals in the WWAN based on local area network criteria, as well as WWAN-related criteria. Local area network control and/or WWAN control functionality may be distributed between one or more WTs in the local group.

In FIG. **12**, a communication system comprises a plurality M of WTs **2209.1-2209**.M communicatively coupled together in a WLAN, which comprises a WLAN controller **2206**. A WWAN network-management operator **2210** is communicatively coupled to the WLAN controller **2206**. WWAN network-management operator **2210** is configured for cooperatively processing WWAN-control messages for the WTs **2209.1-2209**.M, each of which comprises at least one WWAN interface **2201.1-2201**.M, respectively.

According to one aspect of the invention, the WWAN interfaces **2201.1-2201**.M receive WWAN control messages from the WLAN that were processed by the WWAN network-management operator **2210** and transmit those messages into the WWAN. According to another aspect of the invention, the WWAN interfaces **2201.1-2201**.M receive WWAN control messages from the WWAN and couple those messages through the WLAN to the WWAN network-management operator **2210**. According to yet another aspect of the invention, one or more WTs functions as the WWAN network-management operator **2210**. Thus, the WWAN network-management operator **2210** may comprise one or more WWAN interfaces and be configured to transmit WWAN control messages into the WWAN.

For the purpose of the present disclosure, a WWAN comprising a plurality of wireless terminals communicatively coupled together via a WLAN may be defined as one or more of the following system configurations:

A plurality of WTs in a local group configured to receive from a base station a signal intended for at least one WT.

A plurality of WTs in a local group configured to receive from a base station a plurality of signals modulated on interfering (e.g., common) channels and intended for at least one WT.

A plurality of WTs in a local group configured to receive from a base station a plurality of signals modulated on different non-interfering channels and intended for at least one WT.

A plurality of WTs in a local group configured to receive from a plurality of base stations a signal modulated on a common channel intended for at least one WT.

A plurality of WTs in a local group configured to receive from a plurality of base stations a signal redundantly modulated on a plurality of different channels intended for at least one WT.

A plurality of WTs in a local group configured to receive from a plurality of base stations a plurality of signals modulated on interfering channels and intended for at least one WT.

A plurality of WTs in a local group configured to receive from a plurality of base stations a plurality of signals modulated on different non-interfering channels and intended for at least one WT.

A plurality of WTs in a local group configured to transmit to a base station a signal originating from at least one WT.

A plurality of WTs in a local group configured to transmit to a base station a plurality of signals modulated on interfering (e.g., common) channels originating from at least one WT.

A plurality of WTs in a local group configured to transmit to a base station a plurality of signals modulated on different non-interfering channels originating from at least one WT.

A plurality of WTs in a local group configured to transmit to a plurality of base stations a signal modulated on a common channel originating from at least one WT.

A plurality of WTs in a local group configured to transmit to a plurality of base stations a signal redundantly modulated on a plurality of different channels originating from at least one WT.

A plurality of WTs in a local group configured to transmit to a plurality of base stations a plurality of signals modulated on interfering channels originating from at least one WT.

A plurality of WTs in a local group configured to transmit to a plurality of base stations a plurality of signals modulated on different non-interfering channels and originating from at least one WT.

A plurality of WTs in a first local group configured to receive from a second local group a signal intended for at least one WT in the first local group.

A plurality of WTs in a first local group configured to receive from a second local group a plurality of signals modulated on interfering channels and intended for at least one WT in the first local group.

A plurality of WTs in a first local group configured to receive from second local group a plurality of signals modulated on different non-interfering channels and intended for at least one WT in the first local group.

A plurality of WTs in a first local group configured to transmit to a second local group a signal originating from at least one WT in the first local group.

A plurality of WTs in a first local group configured to transmit to a second local group a plurality of signals modulated on interfering channels and originating from at least one WT in the first local group.

A plurality of WTs in a first local group configured to transmit to a second local group a plurality of signals modulated on different non-interfering channels and originating from at least one WT in the first local group.

A base station comprising a plurality of WTs in a base station local group configured to transmit a signal intended for at least one subscriber WT not in the base station local group.

A base station comprising a plurality of WTs in a base station local group configured to transmit a plurality of signals modulated on interfering (e.g., common) channels and intended for at least one subscriber WT not in the base station local group.

A base station comprising a plurality of WTs in a base station local group configured to transmit a plurality of signals modulated on different non-interfering channels and intended for at least one subscriber WT not in the base station local group.

Multiple base stations comprising at least one base station local group configured to transmit a signal modulated on a common channel intended for at least one WT.

Multiple base stations comprising at least one base station local group configured to transmit to a plurality of WTs a signal redundantly modulated on a plurality of different channels intended for at least one WT.

Multiple base stations comprising at least one base station local group configured to transmit to a plurality of WTs a plurality of signals modulated on interfering channels and intended for at least one WT.

Multiple base stations comprising at least one base station local group configured to transmit to a plurality of WTs a plurality of signals modulated on different non-interfering channels and intended for at least one WT.

A base station comprising a plurality of WTs in a base station local group configured to receive a signal originating from at least one WT.

A base station comprising a plurality of WTs in a base station local group configured to receive a plurality of signals originating from at least one WT and modulated on interfering channels.

A base station comprising a plurality of WTs in a base station local group configured to receive a plurality of signals modulated on different non-interfering channels and originating from at least one WT.

Multiple base stations comprising at least one base station local group configured to receive a signal modulated on a common channel originating from at least one WT.

Multiple base stations comprising at least one base station local group configured to receive a signal redundantly modulated on a plurality of different channels originating from at least one WT.

Multiple base stations comprising at least one base station local group configured to receive a plurality of signals modulated on interfering channels and originating from at least one WT.

Multiple base stations comprising at least one base station local group configured to receive a plurality of signals modulated on different non-interfering channels and originating from at least one WT.

A WWAN network-management operator may include a single WT or a plurality of WTs. In one embodiment, the WWAN network-management operator includes a single WT communicatively coupled to the WWAN and configured to perform WWAN-control operations for one or more WTs in the local group. For example, a block diagram of a WT **2300** shown in FIG. **13** comprises a WWAN network-management operator module **2302** communicatively coupled to a WWAN interface **2301** and a WLAN interface **2303**. In another embodiment, the WWAN network-management operator may comprise WWAN network-management operator modules residing in a plurality of WTs. Thus, the WWAN network-management operator may be configured to transmit and/or receive WWAN-control parameters in the WWAN on behalf of one or more WTs in the local group. A local area network controller may also include a WWAN network-management operator module and may perform WWAN network management for one or more WTs in the group.

Each WT may function as its own network-management operator. For example, a WT functioning as its own network-management operator may be communicatively coupled to the WWAN and configured to transmit and receive WWAN control information directly with the WWAN, whereas traffic-channel processing may be performed in cooperation with one or more other WTs in the local group. In another exemplary configuration, WWAN control information may be coupled from a target WT (e.g., a source or destination WT relative to the subject information, i.e., the WWAN control information) to a relay WT communicatively coupled to the WWAN and configured to transmit and receive the target WT's WWAN control information. While the target WT functions as its own network-management operator, it may employ other WTs in the local group to transmit and receive WWAN control messages. Thus, the relay WT may merely function as a pass through having optional added physical-layer adjustments for the WWAN control information. The physical-layer adjustments may be used to condition the WWAN control messages for the WWAN channel and/or the WLAN channel. Similarly, a WT functioning as a network-management operator for itself and/or at least one other WT may employ one or more WTs in the local group for transmitting and receiving WWAN control messages in the WWAN.

In another embodiment, a WT may function as a network-management operator for one or more other WTs. For example, a network controller may function as a network-management operator for at least one other WT. In another embodiment, at least one WT that is neither a network controller nor a target WT may function as the network-management operator. For example, a WT having the best WWAN channel (such as may be determined by any of a variety of signal quality criteria that are well known in the art) may be selected as the network-management operator. Various criteria for selecting WTs for network-management operator responsibilities may be implemented, including load balancing.

In another embodiment of the invention, a plurality of WTs in a local group may simultaneously function as a network-management operator. The network-management operator may comprise multiple WTs including a target WT, multiple WTs including a network controller, multiple WTs not including a network controller, or multiple WTs not including a target WT. A plurality of WTs may redundantly process WWAN control messages. Alternatively, each of a plurality of WTs configured to perform WWAN-control operations may be configured to perform a predetermined subset of the WWAN-control operations.

A network-management operator may participate in any combination of various WWAN-control operations, including power control, data-rate control, session control, authentication, key exchange, paging, control-channel monitoring, traffic channel request, channel assignment, error detection, acknowledgement, request for retransmission, identification, reconnects, synchronization, flow control, request for service from a particular sector or access point, hand-off.

FIG. **14** is a flow diagram of a communication method configured in accordance with an aspect of the invention. A WLAN is employed for sharing WWAN control information between a group of WTs **2401**. WWAN control information is coordinated between the group of WTs and the WWAN **2402**, and WWAN control information is cooperatively processed by the group **2403**.

The Open Systems Interconnection Reference Model (OSI Reference Model) may be used to describe the function of a WWAN comprising a local group of a plurality of WTs communicatively coupled together via a WLAN.

In the Application Layer, each WT typically employs its own user applications for accessing network services (e.g., login, data upload, data download, multi-media processing). Thus, each WT handles its own application-layer network access, flow control, and error processing. Each WT controls its own user interface for access to services that support user applications. These applications typically are not subject to cooperative access (e.g., sharing). However, certain network resources (e.g., printers, faxes) may be shared. Some appli-

cations, such as computational processing applications, may provide for distributed computing processes between WTs in a network. However, such distributed-computing applications have not been employed in the prior art for receiving and decoding wireless communications.

In the Presentation Layer, each WT may translate data from an application format to a network format and vice-versa. Different data formats from different applications are processed to produce a common data format. Each WT may manage its own protocol conversion, character conversion, data encryption/decryption, and data compression/expansion. Alternatively, a network controller that serves multiple WT may perform one or more presentation-layer functions. For example, data-processing intelligence may be handled by a network controller, and individual WTs may function as dumb terminals. In some multimedia applications, a network controller may function essentially as a media server configured to deliver predetermined data formats to each WT functioning as a media device. Furthermore, there are various degrees of how presentation-layer processing may be shared between WTs and a network controller.

In the Session Layer, each WT may be responsible for identification so only designated parties can participate in a session. Session setup, reconnects, and synchronization processes may be managed by the target WT (e.g., a subscriber, an access point, or a base station), which functions as its own network-management operator for session-layer processing. Alternatively, a network controller may manage session-layer activities for each of one or more WTs in the local group. The network controller may store identities for each WT and manage sessions and the flow of information for each WT.

In another embodiment, multiple WTs may participate in session management. Some centralized decision-processing (such as by the target WT or a network controller) may be employed to direct one or more WTs to perform specific session-layer activities. Multiple responsibilities may be divided among the WTs. For example, one WT may conduct synchronization processes and another WT may perform session setup. The WTs assigned to perform particular functions may change with respect to signal quality with the WWAN, load balancing criteria, and/or other considerations.

In the Transport Layer, each WT may convert data streams into packets or predetermined segments. Each WT may also process received packets to reassemble messages. Thus, each WT may perform its own error handling, flow control, acknowledgement, and request for retransmission.

Alternatively, a network controller may manage transport-layer operations for each of one or more WTs in a local group. The network controller may be configured to convert data streams received from the WTs into packets. Similarly, the WT may convert data packets received from the WWAN into data streams that are routed to the appropriate WTs. The network controller may perform common network-management operator functions, including error handling, flow control, acknowledgement, and request for retransmission for each of the WTs.

In yet another embodiment, multiple WTs may be used to convert data streams into packets and/or process received packets to reassemble messages for a particular target WT. Each of a plurality of WTs may process only a portion of the received data stream and perform error handling, flow control, acknowledgement, and request for retransmission for the data it processes. Alternatively, multiple WTs may handle the same data. For example, redundant transport-layer processing may be performed by different WTs having uncorrelated WWAN channels in order to reduce errors, and thus, requests for retransmission. In another embodiment, only one WT may handle transport-layer processing at any given time. For example, a particular WT may be assigned to handle transport-layer processing if it has favorable WWAN-channel conditions. Other criteria, such as load balancing, may be used to select and transfer transport-layer processing responsibilities between WTs.

In the Network Layer, WTs may perform their own network-layer processing, such as addressing and routing. A WT, such as a router, a base station, a switch, or a relay may perform network-layer processes, including managing data congestion, adjusting data frames, packet switching, and routing. In addition to managing network-layer control within its local group, a network controller may perform network-layer processes for the WWAN.

The Data Link layer includes a Media Access Control (MAC) sub-layer and the Logical Link Control (LLC) sub-layer. Each WT may perform Data-link processing, such as converting received raw data bits into packets and managing error detection for other WTs. Similarly, each WT may convert data packets into raw data bits for one or more other WTs. In one embodiment, a target WT may perform its own data-link processing. Alternatively, a network controller may perform data-link processing for one or more WTs.

A Physical layer embodiment may provide for performing all physical-layer processes by a target WT. For example, a target WT distributes spread, scrambled baseband data to the other WTs, which then up convert and transmit the target's transmission signal as specified by the target WT. Similarly, each WT may receive and down convert WWAN transmissions and direct the down-converted signal via the WLAN for processing (e.g., descrambling and despreading) by a target WT.

In one embodiment, physical-layer processes may be divided between a target WT and other WTs in a local group. For example, the target WT may convey baseband data and control parameters to other WTs, which then spread and scramble the baseband data with respect to the control parameters. Additional control parameters, such as power control, and data rate control may be specified. Similarly, WTs in a local group may descramble and despread received data for further processing by a target WT. WTs may monitor control channels for signals addressed to any of a plurality of WTs in a local group.

In yet another embodiment, a network controller may perform some or all physical-layer processes corresponding to a target WT. A network controller may perform all physical-layer processes for a target WT (and other WTs in the corresponding local group if it performs higher-layer processes for the target WT). Alternatively, some of the higher-layer processes may be performed by the network controller and/or other WTs as part of a distributed computing procedure regardless of how the physical-layer processes are performed.

Several aspects of physical-layer processing include WWAN-control operations. Other WWAN-control operations may fall within any of a plurality of the OSI reference model layers. Embodiments and interpretations of the invention should not be constrained to the limitations of the OSI reference model. The OSI reference model is a generalization that may not be suitable for expressing the implementation of all WWAN-control operations.

In one aspect of the invention, a cellular base station may transmit a probe signal (e.g., a predetermined signal that is ramped in signal power) to a plurality of subscriber WTs. A network-management operator in a local group of WTs may be responsive to the probe signal for indicating a signal

power level capable of being received from the base station. Similarly, the signal power level may be used as an indicator for transmit power and/or data rate.

Functions of the network-management operator may be distributed over a plurality of WTs in the local group, and network-management responsibilities may be shared by more than one WT and/or dynamically assigned to particular WTs. For example, a WT that first detects the probe signal may be assigned subsequent network-management responsibilities, such as predicting forward-link SINR and an associated achievable data rate, sending an acknowledgement to the base station, or requesting a particular data rate (e.g., sending a dynamic rate control signal to the base station). In another embodiment of the invention, WWAN signals received by a group of WTs may be combined before being processed by a network-management operator.

In one embodiment of the invention, a network-management operator in a local group performs open loop estimation to adjust reverse link (i.e., local group) transmit power. Alternatively, closed-loop power corrections may involve both the network-management operator and the base station. The network-management operator may send an access probe sequence and wait for an acknowledgement from a base station. Initial probe power is typically determined via power control.

A WT in the local group is typically denoted as being in an inactive state relative to the WWAN when it is not assigned a forward traffic channel. However, the network-management operator may assign one or more WWAN traffic channels to WTs that the WWAN considers inactive. In such cases, inactive WTs may help transmit and/or receive WWAN communications intended for active WTs in the local group. Similarly, active WTs may be assigned additional traffic channels by the network-management operator for transmitting and/or receiving WWAN communications intended for other active WTs in the group. Such assignments may be invisible to the WWAN, since so-called inactive WTs are used for connecting active WTs to the WWAN. In other embodiments of the invention, complex assignments, including sharing traffic channels between WTs, may be implemented.

A network-management operator may service one or more WTs in a variable-rate state. For example, a forward traffic channel is transmitted at a variable rate determined by the network-management operator's data rate control value. The network-management operator may determine the maximum data rate using any of a variety of well-known techniques. The network-management operator uses a data rate control channel to instruct the WWAN what data rate to serve to a particular WT in the local group. In response, the base station selects modulation, channel coding, power and/or number of multiple-access slots.

The network-management operator may direct its instructions to the best base station (i.e., the base station having the best channel relative to the local group) in its active set via addressing (e.g., a covering code). Alternatively, the network-management operator may instruct multiple base stations to serve the local group. This may occur when WTs can access more than one WWAN. This may also occur when some WTs are better served by one base station or sector while other WTs in the same local group are better served by a different base station or sector.

A WT enters a fixed-rate state when its network-management operator signals a request for a specific fixed rate from a base station or sector. The WT may transition to a variable rate if it cannot receive packets at the previously requested fixed rate. A network-management operator may select a fixed rate if there is an imbalance (e.g., different channel conditions) between the forward and reverse links.

In one aspect of the invention, a network-management operator is configured to perform connection-layer protocols that are typically conducted between a target WT and the base station. For example, the network-management operator may participate in acquisition and initialization state protocols, air link management protocols, connection state protocols, route updates, and/or idle state protocols.

A WT in an inactive state typically awakes from a sleep state periodically to monitor a control channel to receive overhead parameter messages and paging messages. In one aspect of the invention, a network-management operator may wait for an activate command from a default air link management protocol. A network-management operator may monitor a WWAN control channel for multiple WTs in a local group. In an alternative embodiment, WTs in the local group may take turns monitoring the WWAN control channel. In this case, responsibilities of the network-management operator are transferred betweens WTs in the local group. In another embodiment, a plurality of WTs may monitor the WWAN control channel, wherein each WT is configured to monitor the channel for only a subset of WTs in the local group.

In a network determination state, the network-management operator selects a channel on which to acquire a base station for a WT in the local group. After selecting a channel, the network-management operator enters a pilot acquisition state in which the network-management operator tunes to a particular channel and searches for the strongest pilot signal. Upon acquiring a pilot, the network-management operator enters a synchronization state. At this point, the network-management operator may transfer synchronization responsibilities to the target WT. If the network-management operator (or the target WT) is unable to obtain a pilot, it reverts back to the network determination state.

In the synchronization state, the network-management operator or the target WT looks for a sync message on the control channel and sets its clock to the time specified in the sync message. Failure to receive the sync message or similar failures may result in returning to the network determination state.

The base station undergoes various state transitions in the process of serving the WTs. In an initialization state, the base station activates an initialization state protocol, overhead message protocol, and a control channel MAC protocol. A network-management operator may selectively route certain messages through WTs in a local group comprising the base station while reserving other messages for WWAN transmission only by the base station.

An idle state occurs after the network is acquired, but before an open connection is established. The base station initiates an idle state protocol, overhead messages protocol, route update protocol, control channel MAC protocol, access channel MAC protocol, and forward and reverse channel MAC protocols. In the connected state, base station and the target WT have an open connection until the connection is closed (i.e., goes to the idle state) or network redirection (goes to the initialization state). The base station activates a connected state protocol, overhead messages protocol, route update, control channel MAC protocol, and forward and reverse channel MAC protocols.

A network-management operator may be configured to direct hand offs between WWAN sectors, base stations, and/or networks. In one embodiment, a network-management operator in a local group may measure the SINR on each pilot in an active set (e.g., a set of base stations that

actively serve the local group) and request data from the sector having the highest SINR. The network-management operator predicts the SINR for the next packet and request a higher data rate if it can decode it at that SINR. The rate request (which may include data rate, format, and modulation type) is sent by the network-management operator to the appropriate sector using a data rate control channel.

Generally, the network-management operator requests data from only one sector at a time. However, different WTs in a local group serving a particular target WT may request WWAN channels from multiple sectors at a time on identical or different WWAN channels. The network-management operator may coordinate requests for channels from different sectors. Multiple sectors (or base stations) may be configured to serve the same WWAN channel simultaneously. Alternatively, multiple WWAN channels may be used to serve one WT in the group. Although the target WT may have a better connection with a particular base station, the local group as a whole may have a better connection with a different base station. Thus, the network-management operator may dictate that the link be established and maintained relative to the group's connection rather than the target WT's connection.

A base-station scheduler may allocate physical channels for WTs. However, a network-management operator in a local group may provide logical channel assignments to the WTs that are invisible to the physical channel operation of the WWAN. Multiple WTs in a local group may utilize a single WT channel, such as for packet switched data communications. Each WT may utilize multiple physical channels, such as when higher data rates are required. The network-management operator may assign logical channels to various physical WWAN channels, and thus, effectively hand off those data channels to other sectors, base stations, or WWAN networks serving those physical WWAN channels.

Data rates requested by WTs may follow a channel fading process, wherein higher data requests occur when channel conditions are favorable and lower rates are requested as the channel degrades. It is well known that when a base station serves a large number of WTs, that diversity of multiple units can mitigate system-wide variations in data rate due to changing channel conditions. Multi-user diversity teaches that the opportunity for serving good channels increases with the number of users, which increases total network throughput.

One embodiment of the invention may provide for a network-management operator that dynamically selects one WT in a local group to communicate with a WWAN at a particular time, even though one or more channels may be served between the base station and the local group. The selection of which WT in the group communicates with the WWAN may change with changing channel conditions between the local group and the base station(s). Thus, the update rate for the dynamic selection may be based on the rate of change of WWAN channel conditions. This embodiment may be adapted for simultaneous communication by multiple WTs and/or the use of multiple base stations and/or WWANs. In another exemplary embodiment, the network-management operator may interleave communications (e.g., packets) across multiple WWAN channels undergoing uncorrelated channel distortions. Similarly, a WWAN specifically configured to interact with a local group may interleave messages across multiple WWAN channels transmitted to the local group. Different WWAN channels may be transmitted and received by one base station or a plurality of base stations. This type of interleaving (at either the local group and the base station) may be determined by a network-management operator.

In another embodiment, a network-management operator may be configured to redundantly transmit data symbols over multiple slots or physical channels to reduce transmission power or to allocate more power to data.

A network-management operator may employ an authentication protocol to authenticate traffic between a base station and a MT. For example, a network-management operator may identify a particular WT in a local group to a base station. The base station may then verify that the WT has a legitimate subscription record with a service provider that utilizes the WWAN. Upon verification, the base station allows access to the air interface and the network-management operator (whose responsibilities may be transferred to the WT) signs access channel packets to prove it is the true owner of the session. In one exemplary embodiment of the invention, the WT and/or the network-management operator may use IS-856 Air Interface Authentication.

In one embodiment of the invention, a target WT includes a network-management operator that employs other WTs in its local group to interact with a WWAN. In this case, authentication may be performed only with the target WT. In an alternative embodiment, the network-management operator resides in at least one other WT, such as a network controller. Thus, authentication may be performed with a network-management operator in a single terminal that is configured to perform authentication for more than one WT.

A network-management operator may employ a key exchange protocol (e.g., a Diffie-Hellman algorithm) for exchanging security keys between a WT and a WWAN for authentication and encryption. Typically, there is some predetermined key exchange algorithm used within a particular WWAN. Public values are exchanged and then messages are exchanged between the WT and the WWAN to indicate that the session keys have been correctly calculated. The keys may be used by the WT and the WWAN in an encryption protocol to encrypt traffic.

In one embodiment of the invention, a network-management operator resides on a target WT that accesses the WWAN via multiple WTs in a local group. The network-management operator may be configured to encrypt and decrypt WWAN traffic for the target WT without vital security information being made available to WTs other than the target WT. In another embodiment, the network-management operator may reside in a network controller. In this case, the network-management operator may be configured to engage in security protocols for more than one WT in the local group. Network-management operators according to various embodiments of the invention may be configured to participate in security protocols used to provide crypto sync, time stamps, and other elements used in authentication and encryption protocols.

Some aspects provide a multicarrier protocol that controls interference relationships between the carriers. This control enables time domain signal shaping, which provides for low PAPR and adaptability to single-carrier waveforms. Disclosed aspects include Carrier Interferometry (CI).

In CI, subcarrier frequencies are selected to provide a predetermined spectral response. Polyphase codes are applied to each subcarrier to control the time-domain characteristics of the superposition signal, as well as provide for orthogonality between data symbols and/or users. In one aspect, a pulse (i.e., a constructive interference resulting from a zero-phase relationship between the subcarriers) is generated from a superposition of the coded signals. Time-

offset replicas of the pulse are used to construct waveforms having a predetermined frequency-domain profile.

An objective may be to enable a communication protocol that provides frequency-diversity benefits of multicarrier modulation to single-carrier systems and provides the low-PAPR benefits of single-carrier modulation to multicarrier communication systems, and the ability to provide the benefits of both systems simultaneously.

FIG. **15** illustrates a CI pulse shape characterized by an in-phase alignment (e.g., mode locking) of harmonic sub-carriers **1505** at a specific time ti. A composite signal **1530** results from a superposition (i.e., summation) of the carriers **1505**. The composite signal **1530** shows a pulse envelope centered at a predetermined time instant ti. In the case where there is no amplitude tapering (i.e., a rectangular window) and a plurality N of carriers have a uniform frequency separation fs, a composite CI signal is:

$$e(t) = \sum_{n=1}^{N} e^{i[(\omega_C + n\omega_s)t + n\Delta\phi]}$$

which is characterized by an envelope-magnitude function:

$$|e(t)| = \left|\frac{\sin(N(\omega_s t + \Delta\phi)/2)}{\sin((\omega_s t + \Delta\phi)/2)}\right|$$

where ω_c is related to a carrier frequency f_c (or equivalently, an offset frequency $f_o=f_c$) by the relationship $\omega_c=2\pi f_c$. Similarly, ω_s is related to the separation frequency f_s by the relationship $\omega_s=2\pi f_s$.

The phase offsets $\Delta\phi$ typically correspond to any of N orthogonal time offsets corresponding to N orthogonal pulse positions. A kth bit or data symbol ak in a user's transmission s(t) modulated onto a particular CI pulse, or phase space is expressed as:

$$s_k(t)=e(t-kT_b)$$

where T_b is a time offset corresponding to the particular CI pulse. Orthogonal pulses are centered at intervals of $T_b=T_s/N$. A burst of bits or symbols may be transmitted onto a contiguous train of pulses, such as shown in FIG. **16**B. In this case, a transmission corresponding to a particular user is characterized by the following relationship:

$$s(t) = \sum_{k=1}^{N} a_k e(t - kT_b)$$

The time-shifted pulses are orthogonal to each other even though the pulses overlap in time:

$$\int_0^{T_s} e(t-kT_b)e(t-nT_b)\delta t(k\neq n)$$

FIG. **16**A illustrates an amplitude distribution of the CI carriers corresponding to the pulse train shown in FIG. **16**B. In some applications of the invention, carriers may be provided with complex weights to generate superposition signals corresponding to a predetermined sequence of code chips or data symbols.

FIG. **17**A illustrates individual CI pulses provided with code chips or data symbols, such as symbols $\beta_0(k)$ to $\beta_{14}(k)$. A pulse train **1795** shown in FIG. **17**B corresponds to the modulated pulses shown in FIG. **17**A.

In time-division multiplexing (e.g., in TDMA), the symbols modulated onto the pulses are typically data symbols corresponding to a particular user. In frequency-division multiplexing (e.g., in OFDM), data symbols corresponding to a particular user are modulated onto a pulse train (such as the pulse train shown in FIG. **16**B) constructed from a predetermined set of carrier frequencies allocated to that user. In direct sequence code division multiplexing (e.g., DS-CDMA) or direct sequence spread spectrum, data-bearing code symbols are modulated onto the pulse train. In coded multicarrier spreading (e.g., MC-CDMA or Spread OFDM), data-bearing code symbols are modulated directly onto the carriers.

The function e(t) is also characterized by an in-phase carrier component $\cos(\omega_c t)$ and a quadrature-phase component $\sin(\omega_c t)$. The in-phase and quadrature-phase components can correspond to N orthogonal pulse positions (i.e., phase spaces) and N pseudo-orthogonal pulse positions, respectively.

The CI signals are periodic with period $T_s=1/f_s$ for an odd number of carriers N and with period $2/f_s$ for an even number of carriers N. In either case, data symbols of duration T_s are typically modulated onto the carriers (or pulses). The main lobe has duration $2/Nf_s$ and each of the N−2 side lobes has a duration $1/Nf_s$.

In FIG. **16**A, 20 carrier frequencies are allocated to a particular user and provided with complex weights to generate a train of CI pulse waveforms that convey information. FIG. **16**B shows 20 pulses orthogonally (and equally) positioned in time corresponding to data transmitted by (or to) that user. Each pulse waveform is a superposition of the 20 carriers provided with phases relative to the orthogonal positions in time. Predetermined sets of phase offsets are provided to the carriers to position the pulses orthogonally in time.

The cross correlation between the real parts of the pulse waveforms is illustrated by the following equation:

$$R_{k,j}(\tau) = \frac{1}{2f_s}\frac{\sin(2\pi N f_s \tau/2)}{\sin(2\pi f_s \tau/2)}\cos\left(\frac{(N-1)}{2}2\pi f_s \tau\right)$$

N equally spaced zeros occur over the time interval $T_s=1/f_s$ as a result of the sinc-like term in the cross-correlation equation. This corresponds to each pulse waveform being centered at a particular time instant corresponding to a zero crossing (i.e., zero value) of all of the other orthogonal pulse waveforms.

The cross-correlation equation expresses the Nyquist zero inter-symbol interference criteria. The Nyquist zero inter-symbol interference criteria requires a waveform to have zero crossings corresponding to positions of the other waveforms.

The spacing of the pulse positions (i.e., time instants) corresponds to zeroes in the cross-correlation function. The pulses are centered at equally spaced time instants k/Nf_s, where k=0, 1, . . . , N−1, N is the number of carriers, and $f_s=1/T_s$ is the frequency separation between the carriers. Thus, the time instants are defined by 0, T_s/N, . . . , $T_s(N-1)/N$.

CI waveforms may be implemented with contiguous or non-contiguous carriers. Contiguous carriers are defined as carriers allocated to one or more users characterized by a frequency separation fs and symbol duration $T_s=1/f_s$.

In the OFDM implementation of the invention, each user is provided with a unique set of carrier frequencies to

eliminate multiple access interference (MAI). Similar frequency-division multiplexing may be provided to other CI-based transmission protocols to reduce or eliminate MAI. The real part of each user's OFDM transmission is expressed by

$$s(t) = \sum_{k=1}^{N} \sum_{i=1}^{N} a_k \cos(2\pi(f_c + if_s)t + \mathrm{mi}2\pi/N)g(t)$$

where a_k is a kth data symbol (preferably a channel-coded data symbol) that is then spread over the N carriers allocated to the user. Since each data symbol is spread across all of the carriers, the full frequency diversity benefits of the channel can be achieved. Time interleaving may also be provided.

In one aspect, a received CI-OFDM signal for at least one user is separated into its orthogonal frequency components. Channel compensation (e.g., equalization) and combining are performed to provide estimates of the transmitted symbols. Inter-bit interference may be compensated via any combination of equalization and multi-user detection.

Carrier mixers or a carrier generator, as described herein, includes any type of system, method, or combination thereof adapted to perform at least one of a plurality of functions, including carrier generation, carrier selection, carrier allocation, and modulation. Carrier mixers imply the existence of a carrier generator (e.g., a multicarrier generator). Thus, carrier mixers and carrier generator can be equivalent terms as used herein. A carrier generator may include a carrier-mixer circuit. A carrier mixer may include any type of mixer, modulator, or equivalent device adapted to provide carrier selection and/or modulation. Carrier mixers/carrier generators may include local oscillators, harmonic signal generators, digital filters, invertible transform algorithms, quadratic mirror filters, sine wave look-up tables, etc. Carrier mixers may be interpreted as performing frequency-domain processes.

Carrier mixers or carrier generators may employ digital signal processing systems, such as microprocessors, may be employed. Consequently, Fourier transforms, such as DFT-based systems may be employed. For example, an IFFT or IDFT may be employed with one or more weight vectors applied to the frequency bins of the transform. A carrier mixer (or carrier generator) may include a weight-vector selector adapted to select predetermined frequency bins. A weight vector may include zero and non-zero values, such as to provide for carrier selection/allocation. Carrier mixers may include one or more carrier-allocation circuits. A carrier mixer allocates one or more carriers to one or more users. A carrier mixer may provide for modulation of data symbols onto the carriers. A carrier mixer may include a plurality of modulators or a modulator adapted to modulate at least one data symbol onto a plurality of carriers.

In this case, the frequencies of the CI carriers are incrementally spaced by a shift frequency f_s. However, non-uniform spacing of the frequencies may also be used to achieve certain benefits. The carrier frequencies are typically chosen to be orthogonal to each other:

$$\int_0^{T_C} \cos(\omega_i t + \phi_i)\cos(\omega_j t + \phi_j)dt = 0$$

where T_c is the chip duration, ω_i and ω_j are the ith and j^{th} carrier frequencies, and ϕ_i and ϕ_j are arbitrary phases. A signal in the jth frequency band does not cause interference in the ith frequency band.

The term carrier, as used herein with respect to a multi-carrier signal or system, is equivalent to the terms subcarrier and tone. Orthogonal carriers may be characterized by constant-frequency carriers with orthogonal frequencies. Alternatively, orthogonal carriers may employ dynamically varying carrier frequencies, such as chirped or hopped carriers. For example, the frequency separation between a set of orthogonal carriers with dynamic frequencies may be constant or limited to integer multiples of an orthogonal frequency spacing f_s.

An input data source includes any input port adapted to receive data bits and/or data symbols, such as coded data bits and/or symbols. An input data source may include any apparatus and/or algorithm adapted to generate data, such as coded or uncoded data bits and/or symbols. An input data source may include at least one coder and/or coding algorithm. Channel coding may include any combination of well known channel coding techniques, such as trellis, block, convolutional, parity check (e.g., Gallagher coding or any other type of low-density parity check coding), and iterative soft-decision feedback (e.g., turbo) coding.

The phase of each CI signal is set with respect to at least one predetermined receiver time interval (i.e., phase space) in which the carriers constructively combine when received by a CI receiver. A set of incremental phase offsets $e^{in\Delta\Phi_k}$ corresponding to at least one pulse position is applied to the CI carriers by one of a plurality N of interval delay (i.e., phase) systems. Each pulse's phase space is a set of carrier phases corresponding to the time instant at which the pulse is centered. Thus, each set of phase offsets maps a data symbol to a pulse centered at a particular instant in time.

Interval delay systems, or equivalently, phase-shift systems, include any type of phase shift module, delay module, temporal mapping module, polyphase code module, polyphase filter, etc., adapted to map data symbols to pulse positions. A pulse position is an instant in time at which a CI pulse is centered. A pulse, as used herein, typically refers to a single-pulse waveform generated from a superposition of selected carriers. Pulse waveforms may include a plurality of pulses, such as a pulse train. Delay systems are systems, algorithms, and/or devices adapted to provide time offsets (i.e., phase shifts) to individual carriers to generate carrier superpositions (pulse waveforms). Delay systems may provide phase offsets and/or time offsets to carriers and/or data symbols.

A delay system is typically configured to receive as input at least one of a data sequence and a set of carriers. The delay system directly maps data on modulated carriers to particular instants in time. The delay system may align carriers to produce pulse waveforms centered at one or more time instants and then modulation may be provided to the pulse waveforms. An interval delay system may include a polyphase coder adapted to provide polyphase codes to data symbols and/or carriers. A delay system may provide polyphase codes to frequency bins of an invertible transform, such as an IDFT or IFFT.

Although the apparatus diagrams illustrated herein illustrate the generation of CI transmission signals as step-by-step procedures, a preferred embodiment for accomplishing these processes may use digital signal-processing techniques, such as Discreet Fourier Transforms. The order of

some of these processes may be switched. For example, modulation of each carrier by the input data may be the final step before combining.

Disclosed aspects may provide for any of various forms of duplexing, such as frequency division duplexing, code division duplexing, and time division duplexing (TDD). TDD allows for a highly efficient and cost-effective architecture, since the same frequency is used for both transmission and reception and the channel characteristics in both directions are virtually identical. In array-processing applications, the beam-forming weights can be determined from a base station antenna array for the reverse link and the same weights can be used on the forward link without requiring multiple antennas at the remote unit. This allows the system to deliver the capacity and interference mitigation benefits of adaptive beam forming for both the uplink and the downlink while keeping the complexity and cost of the remote unit very low. Furthermore, the TDD approach eliminates expensive diplexing filters and permits the use of a single RF chain, further reducing subscriber-unit costs.

FIG. **18**A is a functional diagram of a CI transmitter. An allocation step **1814** is performed by carrier mixers, which allocate a plurality of carrier frequencies (i.e., tones) to a particular user. A mapping step **1816** is performed by phase-shift/delay systems, which map each data symbol from data source **1812** to a particular pulse position. A pulse-generation step **1820'** is performed by a combiner, which receives the allocated carriers as inputs and generates CI pulses at predetermined pulse positions. The resulting data-bearing CI waveform may be an analog or digital signal. If it is an analog signal, the waveform may optionally be sampled **1821**.

The plurality of carrier mixers performs the allocation step that provides carrier frequencies used to generate at least one superposition signal for a particular user. The plurality of phase-shift/delay systems provides the mapping **1816** of each data symbol from the data source to a predetermined instant in time (i.e., pulse position). Each set of phase shifts applied to the information-modulated carriers by the phase-shift/delay system produces a phase alignment of the carriers (i.e., an interference pulse) at the predetermined instant in time. Thus, the combination of the phase-shift/delay systems and the data source produces a discrete signal of the mapped data symbols. The data symbols are typically provided with polyphase codes and modulated onto the individual CI carriers. Each polyphase code maps its associated data symbol to a particular instant in time.

A combining system, or combiner, as described herein, is any system, device or algorithm adapted to combine a plurality of allocated carriers (for transmission or reception) to produce a time-domain waveform. A combiner may be interpreted as a frequency-domain to time-domain converter. A combiner may be referred to as an interpolation circuit because it generates a time-domain waveform from a plurality of frequency-domain components. A combiner may include an inverse-Fourier transform, such as an IDFT or IFFT circuit or algorithm. Thus, one way to implement carrier generation and combining is to provide an IDFT. Consequently, carrier selection and data-symbol mapping may be performed by a polyphase coder adapted to generate a vector of frequency-bin weights.

The combining system (which may equivalently be an interpolation circuit) is adapted to perform pulse generation, as it combines the phase shifted carriers to produce one or more information-modulated pulses centered at the predetermined instants in time. A plurality of information-modulated pulses may be positioned contiguously in time (such as shown in FIGS. **16**B and **17**B) to provide a substantially uniform (low PAPR) signal over a predetermined interval (e.g., symbol period Ts or some multiple thereof). The pulse waveforms are functions that span the symbol duration Ts. In this case, a pulse waveform may be a digital or analog signal. The frequency response of the pulses includes sinusoids provided by the carrier mixers (i.e., allocation circuit).

FIG. **18**B illustrates a CI transmitter that includes a subcarrier allocation module **1814**, a mapping module **1816**, and an interpolation module **1820**. The subcarrier allocation module **1816** performs the function of carrier mixers. Subcarrier allocation assigns a predetermined number N of carriers to one or more users wherein the carrier frequency spacing f_s and data symbol period T_s are selected to ensure orthogonality between the carriers. Orthogonality may be provided between the allocated carriers and unallocated carriers (e.g., carriers assigned to other users). For a number N of carriers, there are N orthogonal phase spaces (i.e., pulse positions). Thus, the number of users in an orthogonal CI system is less than or equal to the number N of carriers.

The carriers corresponding to each user may include contiguous carrier frequencies or uniformly spaced frequencies distributed over a broad frequency band. Each user may be allocated a unique set of carriers, thus providing for orthogonal frequency division multiple access. Alternatively, two or more users may share at least one set of carrier frequencies. Thus, CI may employ other multiple-access schemes, including time division and code division.

The mapping module **1816** is equivalently a multicarrier phase-shift module. The mapping module **1816** maps each data symbol from a data source to a predetermined instant in time. Incremental phase offsets applied to a plurality of carriers are equivalent to a time offset (e.g., delay) applied to a superposition of the carriers. Each set of phase offsets produces a phase alignment of the carriers (i.e., an interference pulse) at a predetermined instant in time, thus, mapping each data symbol to an instant in time.

The carriers are provided by the subcarrier allocation module **1814** (e.g., a plurality of carrier mixers) and modulated with one or more data symbols. Modulation may be performed at the carrier mixers. The combination of the phase-shift/delay systems and the data source produces a discrete signal consisting of the mapped data symbols.

The interpolation module **1820** can be expressed by a combining system. The interpolation module **1820** combines the phase-shifted carriers to produce one or more information-modulated pulses centered at the predetermined instants in time. The subcarrier allocation module **1814** provides the carriers from which the pulses are produced. Thus, the frequency response of the pulses may include only the sinusoids allocated by the subcarrier allocation module **1814** to a particular user. Since each user may be assigned a unique set of carriers, the pulse waveforms produced by the communication system can include non-zero sinusoids allocated to a particular user and zero-valued (i.e., an absence of) sinusoids allocated to other users.

The CI transmitter components illustrated in FIG. **18**B, as well as other components in the transmitter, may be implemented as digital signal processing components. Consequently, the information-modulated pulses generated by a CI transmitter may be a digital signal sample vector.

Since the CI pulses are positioned orthogonally in time if the phase offsets are appropriately selected, signal characteristics (e.g., phase, amplitude, frequency, etc.) of each pulse at the pulse maxima conveys the data symbol value assigned to the corresponding phase space (i.e., instant in time at which the pulse is centered).

FIG. **19** illustrates a CI transmitter. A set of carrier mixers **1914** (which typically includes a multicarrier signal generator) is adapted to allocate a set of carriers to a particular user. Thus, the carrier mixers **1914** perform the same function as a Discreet Fourier Transform (DFT) circuit combined with a zero-insertion circuit. For example, carriers corresponding to other users are removed, avoided, or otherwise set to zero.

A phase-shift/delay system **1916** is adapted to map each of a plurality of data symbols from a data source **1912** to a predetermined instant in time. The data source **1912** provides data symbols to any of the transmitter modules **1914**, **1916**, and/or **1920**. Data symbols may be modulated directly onto individual carriers, data-bearing polyphase codes may be generated, or CI pulse waveforms may be modulated with data. The phase-shift/delay system **1916** applies sets of phase offsets to a plurality of carriers, which are provided by the carrier mixers **1914** and optionally modulated with one or more data symbols. Each set of phase offsets produces a phase alignment of the carriers (i.e., an interference pulse) at a predetermined instant in time, and thus, maps each data symbol to an instant in time. The combination of the phase-shift/delay systems **1916** and the data source **1912** produces a discrete signal of the mapped data symbols.

A combining system **1920** combines the modulated, phase-shifted carriers to produce information-modulated pulse waveforms. These pulse waveforms are inverse Fourier transforms of the carriers represented in the frequency domain. Thus, the combining system **1920** performs the same function as an Inverse-DFT circuit. Although not shown, a gain adjustment module or system (e.g., a pulse-shaping filter) may optionally be included in the transmitter.

CI signal generator systems may include a transmission system, such as is known in the art with respect to single carrier and multicarrier communications. For example, a transmitter may include analog and/or digital components typically used to process a baseband signal for transmission into a communication channel.

FIG. **20** illustrates a specific embodiment of a CI transmitter. A carrier generator/mixer circuit **2014** includes a pulse generator **2001** and a carrier-selection filter **2002**. The pulse generator **2001** is adapted to generate pulse having a predetermined pulse-repetition frequency to provide a predetermined multicarrier output. Other pulse-generation parameters, such as pulse shape, may be selected and/or adapted to provide for desirable spectral characteristics.

A subcarrier processing module **2016** may be adapted to provide phase offsets to the selected carriers, provide polyphase coding to the carriers, modulate data (or coded data) symbols onto the carriers, and/or provide for carrier gain adjustments (e.g., pulse shaping, channel compensation, carrier selection, etc.). Accordingly, the subcarrier processing module **816** may include any combination of digital filters, modulators, coders, phase shifters, and channel-compensation circuits.

A combiner **2020** is optionally provided to generate a superposition of the carriers. A transmission module **2022** processes the baseband multicarrier signal and couples the processed signal into a communication channel. Although the combiner **2020** is shown coupled between the subcarrier processing module **816** and the transmission module **2022**, in-channel combining may be provided. Accordingly, transmitter components (not shown), such as amplifiers, frequency converters, and guard-interval modules may be provided separately to each subcarrier.

A data source **2012** is coupled to at least one of the modules **2014**, **2016**, and **2020**. The pulse generator **2014** may be modulated with data or otherwise adapted to generate information-modulated pulses. Alternatively, the subcarrier processing module **2016** may be adapted to modulate data onto the pulses or the selected individual carriers. In another embodiment of the invention, the combiner **2020** includes a modulator (not shown) adapted to modulate data symbols from data source **2012** onto the superposition signal.

Some aspects may employ any of a number of techniques for providing channel estimating. For many of these methods, a block of pilot chips, tones, or other known signals may be inserted into the transmitted waveform. Known symbols may be mapped to CI phase spaces. Training symbols may be provided to individual subcarriers. In other embodiments, various types of coded training symbols may be transmitted. Blind adaptive estimation and equalization may be employed.

FIG. **22**A illustrates a plurality of CI pulse waveforms **2201** to **2209** orthogonally positioned in time. A plurality N of equally spaced carriers $f_1, f_2, \ldots, f_N$ are combined to generate the pulses **2201** to **2209**. A set of carrier phases **2211**, **2212**, . . . , **2219** corresponds to each of the pulses **2201**, **2202**, . . . , **2209**, respectively. Each set of carrier phases **2211**, **2212**, . . . , **2219** is an orthogonal polyphase CI code (or phase space) applied to the carriers to center a given pulse waveform at a corresponding instant in time.

A complex-valued data symbol (not shown) impressed onto a pulse (such as pulse **2201**) may be characterized by an in-phase (e.g., real) part modulated onto pulse **2201** and a quadrature-phase (e.g., imaginary) part modulated onto a pulse waveform (not shown) centered equidistantly between pulses **2201** and **2202**. Similarly, a first set of N real data symbols may be impressed onto a first set of N 9 orthogonal pulses (such as the pulses **2201** to **2209**). A second set of real data symbols may be impressed onto a quadrature-phase set of orthogonal pulses (not shown) centered equidistantly between adjacent pairs of the pulses **2201** to **2209**.

Complex carrier weights corresponding to each of the carriers $f_1, f_2, \ldots, f_N$, represent a sum of the phase spaces **2211**, **2212**, . . . , **2219** multiplied by their corresponding data symbols. In particular, an nth (n=1, 2, . . . , N) carrier's complex weight equals the sum of each complex data symbol in the nth row of each phase space **2211**, **2212**, . . . , **2219** multiplied by the data symbol value (not shown) associated with that phase space **2211**, **2212**, . . . , **2219** (i.e., pulse position **2201**, **2202**, . . . , **2209**).

FIG. **22**B represents a CI waveform of the present invention. A plurality N of subcarriers **2221** to **2229** (e.g., sinusoids, or tones) are characterized by at least one predetermined set of complex subcarrier weights **2210**. These weights **2210** align the sinusoids **2221** to **2229** to produce a train or sequence of information-modulated pulses **2201** to **2209** in the time domain. These pulses **2201** to **2209** may be generated by applying the subcarrier weights **2210** to subcarriers (such as subcarriers **2221** to **2229**) allocated to at least one user in a network.

A network may be characterized by various types of communication architectures having two or more users, or nodes, including point-to-point, point-to-multipoint, broadcast, multipoint-to-multipoint, multipoint-to-point, hierarchical, ad-hoc, peer-to-peer, multi-hop, and cellular. The invention is independent of the type of network. Accordingly, other network configurations may be employed. Similarly, the invention is independent of the propagation medium (i.e., communication channel) connecting the nodes.

Alternatively, multiple time-offset pulses are combined wherein each pulse **2201** to **2209** is generated from a

superposition of predetermined subcarriers **2221** to **2229** and modulated with a corresponding data symbol. In some cases, time-domain waveforms are provided with frequency-domain processing (e.g., pulse-rate control, rise-time and roll-off control, pulse shaping, pulse-width control, frequency-selective filtering, windowing, and/or frequency masking) to generate pulse waveforms having predetermined spectral characteristics.

Variations of the disclosed pulse-generation techniques and/or multicarrier-generation techniques, as well as other techniques, may be employed in generating CI pulse waveforms. Pulse generators include circuits, systems, software, etc., adapted to generate pulse waveforms. Pulse generators can also include carrier-generation circuits, systems, software, etc. having some carrier-weighting apparatus or algorithm (e.g., CI coder, phase shifter, delay device, mode-locking system, etc.) adapted to produce a plurality of carriers having complex weights that shape a superposition of the carriers into one or more pulse waveforms. Since there are many techniques for generating CI waveforms, the invention is not limited to any specific embodiment for generating CI waveforms disclosed herein. Other techniques for generating CI waveforms will be evident to persons skilled in the art.

CI waveforms are typically impressed onto one or more carriers. CI subcarriers may be impressed onto multiple transmission carrier signals, such as carriers corresponding to different frequency bands. CI waveforms may be conveyed as analog waveforms (such as generated by a D/A converter or a bank of oscillators). CI waveforms may be digital signals (such as a digital output generated by an IDFT or other transform). Digital CI waveforms may be generated from an A/D conversion of at least one analog CI waveform. Digital CI waveforms may be generated by appropriately weighting and summing a predetermined set of digital sinusoids that are dynamically generated or stored in memory. Digital CI waveforms may include binary or M-ary (i.e., higher order) signals. Digital CI signals may be expressed as discreet or continuous modulation symbols, including, but not limited to, QAM, PSK, CPM, FSK, AM, FM, PAM, and TOM. The digital signals may be transmitted in any order.

Various interleaving and/or channel-coding techniques may be employed in the transmission of digital signals associated with CI waveforms. In one aspect of the invention, coding (which is not necessarily limited to channel coding) and/or interleaving are applied to data symbols prior to generating the CI waveforms. In another aspect of the invention, coding and/or interleaving are applied to digitized CI signals. In yet another embodiment, modulation symbols may be interleaved.

The offset frequency f_o represents the carrier frequency. In some applications, CI waveforms may be conveyed in their baseband form (i.e., a carrier frequency, or offset frequency f_o, having zero frequency). For example, baseband CI waveforms may be conveyed inside a digital signal processor or equivalent device, between storage devices (physical and/or virtual memory) and signal-processing devices (e.g., DSPs, microprocessors, CPUs), inside transmitter components, inside receiver components, and/or between transmitter and receiver components. CI waveforms may be conveyed in an intermediate-frequency (IF) form. For example, the multicarrier CI signal may be impressed on an IF carrier. Carriers having other frequencies, including optical, infra-red, and microwave, may be employed.

Complex subcarrier weights convey phase space (e.g., CI codes, phase-shift sets, carrier delays, pulse (time-) offset, or any other interpretation of carrier superposition signals resulting from carrier phase alignments at predetermined times) and information (e.g., data symbol) values. Complex subcarrier weights may be generated from a product of a vector or matrix of data symbols with a vector or matrix of phase space (i.e., CI code) values. Complex subcarrier weights may be generated from sums of information-modulated phase spaces. Complex subcarrier weights may be generated from a sum of products of each of a plurality of phase-shift sets corresponding to a particular phase space with data symbols corresponding to that particular phase space. Carrier weights may be generated by calculating or measuring subcarrier amplitudes and phases resulting from combining a plurality of information-modulated, time-offset pulse waveforms.

Subcarrier weights may optionally include channel compensation weights, array-processing weights, and/or coding (e.g., channel coding, multiple-access coding, spread-spectrum coding, etc.). The subcarrier weights may optionally provide for data interleaving.

In some aspects of the invention, subcarrier weights may be provided with at least one code (e.g., a complex-valued or real code) adapted to de-orthogonalize (e.g., provide time-domain spreading, and thus, overlapping of) the transmitted pulses. Upon reception, an appropriate derivative of the code (e.g., a complex-conjugate code) can be applied to the appropriate frequency-domain components to re-orthogonalize the pulse waveforms.

FIG. **21** illustrates basic components of CI signal generation software residing on a computer-readable medium **2199**. CI signal generation software is typically configured to control the function and transmission-signal output of a single carrier or multicarrier transmitter. In some cases, a CI transmission may be characterized as a single-carrier signal in the time domain having a plurality of predetermined frequency-domain (or spectral) components.

A subcarrier allocation source code segment **2191** is adapted to generate a plurality of subcarriers allocated to at least one user or allocate a plurality of input subcarriers (not shown) to a particular user. A subcarrier weighting source code segment **2192** is adapted to provide complex weights (e.g., CI codes) to a plurality of the allocated subcarriers. The weights are configured to map one or more input data symbols into one or more phase spaces.

The computer-readable medium **2199** may include any item of manufacture adapted to store or convey software and/or firmware. The source-code segments **2191** and **2192** may reside on a physical memory storage device, such as any magnetic, electrical, or optical device adapted to store data and/or computer command instructions. The source-code segments **2191** and **2192** may be implemented as gate configurations on a programmable or integrated circuit. Other means for arranging physical devices and/or electromagnetic phenomena may be employed to convey the function of the source-code segments **2191** and **2192**. Accordingly, the computer-readable medium **2199** may include any combination of FPGAs, ASICs, transient memory, and persistent memory.

Subcarrier allocation may include generating subcarriers, providing for receiving input subcarriers, retrieving subcarriers or superposition waveforms from memory (e.g., a look-up table), or selecting non-zero (or equivalently, zero) valued input bin weights of an invertible transform, such as a DFT. In some applications, subcarrier allocation can include pulse shaping, controlling symbol durations, and/or selecting subcarrier frequency spacing. Some frequencies

may be selected or avoided relative to channel conditions, bandwidth requirements, and/or interference.

The subcarrier allocation source code segment **2191** and subcarrier weighting source code segment **2192** may be implemented in one program. Similarly, other processing operations typically performed in a communication system transmitter may be implemented in, or in addition to, the source-code segments **2191** and **2192**. It should be appreciated that subcarrier allocation, selection, and assignment can include providing subcarriers for system control and/or monitoring. Subcarrier allocation, as described throughout the specification may include providing for pilot tones, training sequences, and/or other subcarriers allocated to other system-control functions. Subcarrier weighting may include channel coding, source coding, spread-spectrum coding, formatting, multiple-access coding, multiplexing, encryption, array processing, and/or modulation. Systems and methods illustrated herein and described throughout the specification may be implemented as source-code segments residing on one or more computer-readable mediums.

Network control in CI communications may be adapted to enable users to share network resources (e.g., bandwidth). For example, channel resources in the form of phase spaces and/or subcarriers may be allocated to each user relative to their level of service. Bandwidth may be allocated to users relative to any combination of individual throughput requirements, purchased level of service, and availability of bandwidth. Circuit-switched processes may be implemented with respect to subcarrier allocations. Packet-switched processes may be implemented with respect to phase spaces. CI communications provides for the concurrent implementation of circuit switching and packet switching.

FIG. **23**A is a functional flow chart of a CI receiver. A receiver process **2301** couples at least one transmitted signal from a communication channel and converts it to an IF or baseband signal. Multicarrier receivers typically include various combinations of signal-processing components, such as amplifiers, filters, down converters, A/D converters, cyclic prefix removers, beam forming circuits, as well as other components. The receiver process **2301** may generate analog or digital signals.

A filtering process **2302** performs a time-domain to frequency-domain conversion of the received signal to produce a plurality of frequency-domain components. Filtering may remove one or more frequency components, or otherwise provide frequency-domain constraints such that the resulting frequency-domain components correspond to components of at least one desired transmit signal. The frequency-domain components may include subcarriers or complex weights corresponding to the magnitude and phase of each subcarrier. Time-domain to frequency-domain processes and frequency-domain to time-domain processes are commonly performed using Fourier transforms or cosine transforms.

An optional frequency domain equalization (FEQ) step **2303** may be provided. The FEQ step **2303** typically involves applying complex channel-compensation weights to the frequency-domain components. An equalizer, as used herein, is a digital hardware/software apparatus adapted to correct for the inter-symbol interference, fading, and/or other distortions of the received digitally-encoded signals so that the initial data can be recovered. Typically, an equalizer compensates for inter-symbol interference via several processes, such as linear equalization or decision feedback equalization. In linear equalization, the incoming signals are multiplied by the inverse of the inter-symbol interference, generally removing inter-symbol interference from the incoming signals. A drawback of linear equalization is that noise inherent in the data transmission is undesirably simultaneously amplified. Decision feedback equalization avoids the noise amplification problems of linear equalization, but runs the risk of error propagation since any decision errors that are made are fed back. Other types of equalization that may be included in the invention include maximum likelihood sequence estimation, iterative equalization, inter-symbol interference cancellation, and/or turbo equalization.

A combining process **2304** combines the selected frequency-domain components to produce a time-domain signal (e.g., a superposition signal or a sequence of data symbols). Thus, the combining process **2304** is equivalent to other frequency-domain to time-domain conversion processes. Combining **2304** may be followed by an optional time-domain equalization (TEQ) step **2305** and/or an optional multi-user detection (MUD) step **2306**. A decision process **2307** is adapted to estimate the received data in order to recover transmitted data symbols. Various types of decision processing **2307** may be employed. An integration step (not shown) is typically provided with combining **2304** and/or decision processing **2307** to combine samples, or otherwise process the received signal, over one or more symbol durations T_s.

A decision system, as used herein, describes any combination of devices and/or algorithms adapted to process an input signal to provide at least one estimate of the input signal's value. Hard and/or soft decisions may be employed. A decision system may provide for various signal-processing techniques (e.g., decoding, feedback, as well as various adaptive routines), such as are typically associated with receivers and reception techniques. A decision system may employ some reference, such as a reference symbol constellation.

FIG. **23**B illustrates a receiver method and apparatus similar to that shown in FIG. **23**A with the addition of a CI phase space decoder step **2310**. A plurality of CI phase spaces (i.e., time intervals) can be selected by the same transversal filter described with respect to the TEQ **2305**. In this case, data symbols impressed onto different phase spaces are separated by applying the appropriate incremental delays (i.e., phase offsets) to the individual carriers prior to combining **2304**. If the components are complex values (e.g., output-bin values of a discreet Fourier transform), a complex conjugate of each CI code used to map a data symbol to a particular phase space may be employed to recover the corresponding mapped symbol.

FIG. **24**A shows an embodiment of a CI receiver that includes a receiving module **2301**, a filter bank **2302**, a delay system (or phase-shifter bank) **2310**, a combiner **2304**, and a decision module **2307**. Received signals are processed by the receiving module **2301** prior to processing at the filter bank **2302**. The filter bank **2302** may include a plurality of filters, such as a plurality of analysis filters. The filter bank **2302** is typically a complementary system with respect to a carrier synthesizer (not shown) employed on the transmit side to generate CI signals. Alternatively, the filter bank **2302** may include a transform operation that is complementary (e.g., inverted) relative to an associated transform function in a corresponding CI transmission process. For example, the filter bank **2302** may be adapted to perform a Fourier transform operation (e.g., a DFT implemented with a fast transform algorithm, such as a fast Fourier transform). Alternatively, the filter bank **2302** may be adapted to perform matched filtering. In any of these cases, the function of the filter bank **2302** is to convert an input time-domain signal into a plurality of frequency-domain components.

The delay system **2310** is adapted to provide incremental delays to a plurality of subcarrier waveforms generated by the filter bank **2302**. Equivalently, the delay system **2310** may provide incremental phase offsets to frequency-bin values or equivalent complex values corresponding to carrier magnitudes and phases. It is well known that there is a linear relationship between carrier time offsets τ and carrier phase offsets ϕ related to a given carrier frequency f_n:$\phi=2\pi f_n\tau$. The delay system **2310** typically provides a complementary or inverse set of delays (or equivalently, phase shifts) to the component waveforms. Accordingly, the delay system **2310** is adapted to provide complementary phase offsets (or time offsets) that are complex conjugates of terms corresponding to each predetermined phase space, such as the phase spaces **2211**, **2212**, . . . , **2219** shown in FIG. **22**A.

The combiner **2304** is adapted to combine one or more sets of the delayed (or phase offset) carrier components. Combining may include equalization, such as frequency-domain equalization. Similarly, some form of time-domain equalization and/or multi-user detection may be performed after combining. Consequently, the combiner **2304** may include at least one equalizer (not shown).

The combiner **2304** combines the frequency-domain components to generate a time-domain sequence, such as a reconstructed CI pulse waveform or a sequence of symbol values corresponding to the transmitted data. A CI pulse waveform typically includes a plurality of orthogonally positioned CI pulses (i.e., a pulse train, such as illustrated in FIGS. **16**B and **17**B) wherein each pulse conveys (e.g., is modulated with) a data symbol. Thus, the combiner **2304** generates signal values from data symbols that were mapped to predetermined instants in time (i.e., phase spaces, or pulse positions centered at equally spaced time instants) by at least one transmitter.

The decision module **2307** processes the signal values to generate estimated data symbols. Methods of formatting information symbols, such as mapping a constellation of data symbols to a constellation of modulation levels, and the reverse operation, are typically understood to be a process within a symbol-estimation step or decision step. Such as in which information symbols are converted to waveform symbols at a transmitter and the reverse conversion is performed at a receiver. A decoder may perform symbol-to-bit mapping. Digital data may be mapped into a signal point sequence with respect to a predetermined code, and an inverse mapping produces an estimated data sequence from a received signal point sequence. An inverse-mapping device (not shown), which may be part of the decision module **2307**, produces an estimated data sequence from a received signal point sequence. Receivers may employ channel estimation. Channel estimation in multicarrier systems is typically regarded as part of an equalization process.

FIG. **24**B illustrates a CI receiver. A DFT **2302** functions as a filter bank. A delay system **2310** is implemented as a plurality M of phase-space modules **2310.1** to **2310**.M. Each phase-space module **2310.1** to **2310**.M, such as phase-space module **2310.1**, is adapted to generate a plurality N of phase offsets, such as **2310.11** to **2310.1**N corresponding to a particular phase space. Phase-shifted values or time-offset carriers generated by each phase-space module **2310.1** to **2310**.M are coupled to a corresponding combiner of a plurality M of combiners **2304.1** to **2304**.M. A decision module **2307** is adapted to process combined symbols or waveforms to generate at least one data estimate. A decision module or a delay system may include at least one decoder (not shown) adapted to perform any necessary decoding, such as channel decoding, multiple-access decoding, demultiplexing, de-spreading, decryption, etc.

FIG. **25**A illustrates a CI reception method and functional components of a CI receiver. A receiver module **2501** is adapted to process transmissions from a communication channel to generate one or more received signals for baseband or IF processing. A projection module **2502** is adapted to project the received signals onto at least one orthonormal basis corresponding to at least one user's transmissions. A combining module **2504** is adapted to combine the projections and optionally perform equalization. Combined signals are processed in a decision module **2507** adapted to generate one or more estimated data symbol values.

In particular, the steps of performing time-domain to frequency-domain conversion and filtering the frequency-domain signal may be achieved by projecting the received signal onto the orthonormal basis of the transmitted signals (such as indicated by the projection module **2502**). Projecting a received multicarrier signal onto an orthonormal basis of a particular user's transmitted signal produces frequency-domain signal components $r=(r_0, r_1, \ldots, r_{N-1})$ corresponding to that user's assigned carriers. Equivalently, the projection of a received signal onto an orthonormal basis excludes signals (e.g., carriers and/or phase spaces) that do not correspond to that orthonormal basis.

FIG. **25**B illustrates a CI receiver method and system. A receiver module **2501** is adapted to process and couple one or more transmitted signals from a communication channel to a matched filter **2502**. The receiver module **2501** is adapted to perform various types of signal processing (e.g., amplification, filtering, down conversion, A/D conversion, guard-interval removal, beam forming, and/or other types of signal processing) to modify a received signal into an appropriate format for baseband or IF signal processing. The modified signal may include an analog or digital signal.

The matched filter **2502** is typically matched to one or more signal characteristics (e.g., subcarriers, phase spaces, time intervals, codes, etc.) of at least one user or data stream. Different users and/or transmitted data symbols are typically characterized by at least one set of unique diversity parameter values, such as carrier frequencies, phase spaces, time intervals, codes, subspaces, polarizations, or combinations thereof. Other diversity parameters may be used to characterize different users and/or data streams. The matched filter **2502** may include one or more matched-filter elements.

The output(s) of the matched filter **2502** typically characterizes the degree of matching (e.g., correlation) of the filter **2502** with the received signal(s). Measured variations in the degree of matching can indicate the transmitted symbol values. Thus, these measurements may be mapped to a predetermined symbol constellation. The temporal characteristics (e.g., synchronization and duration) of these measurements are typically selected in an integrator **2504**. The integrator's **2504** function is typically optimized relative to the probability of error (or BER) of the symbol estimates generated by a decision module **2507**.

Integration represents combining in the time domain. Consequently, integration may be part of a combining process (not shown). Frequency-domain combining is typically performed in the matched filter **2502**. For example, matching of a particular phase space includes carrier selection, and accordingly, a combining of the appropriately phase-shifted carriers. Alternatively, the matched filter **2502** simply matches components of a signal space corresponding to a particular user or data channel. In this case, the integrator **2504** produces values corresponding to the components over a predetermined time interval, and the decision module **2507**

combines the component values to generate symbol estimates. Thus, the matched filter **2502** may employ polyphase codes corresponding to CI phase spaces as part of its matching function. Similarly, the decision module **2507** may employ polyphase CI codes as part of a combining process.

The decision module **2507** may be adapted to perform any of various functions related to data-symbol processing. For example, the decision module **2507** may perform any combination of channel decoding, demodulation, spread-spectrum decoding, de-interleaving, demultiplexing, multiple-access decoding, and formatting. Equalization may be performed by one or more receiver modules **2502**, **2504**, and/or **2507**.

FIG. **26**A illustrates a CI receiver apparatus and method of the invention. A receiver module or system **2501** is adapted to receive and process at least one transmitted signal to provide a digital or analog time-domain signal to a first software module **2502**. The first software module **2502** is adapted to project the received signal onto the orthonormal basis of the transmitted signals. This achieves a combined time-domain to frequency-domain transform and tone filtering.

The first software module **2502** includes a plurality N of multipliers **2511**.**1** to **2511**.N adapted to multiply the received signal by reference signals having orthogonal carrier frequencies $f_n=f_o+nf_s$ (n=0, . . . , N−1) and at least one predetermined phase relationship $n\Delta\Phi_k$. Software module **2502** also includes a plurality N of integrators **2504**.**1** to **2501**.N adapted to integrate the products over each symbol interval T_s. The outputs of the first module **2502** are frequency-domain signal components $r=(r_0, r_1, \ldots, r_{N-1})$ corresponding to a particular user's assigned carriers. The first module **2502** is typically adapted to generate phase offsets $\Delta\Phi$ corresponding to a plurality of phase spaces (i.e., time offsets).

A second software module **2514** takes the form of a combiner, which performs a frequency-domain to time-domain transform. Equalization (not shown) may be performed by either or both first and second modules **2502** and **2514**, respectively. Time-domain equalization and/or frequency-domain equalization may be employed. Various combining techniques, such as any appropriate optimal-combining technique may be employed. The combined frequency-domain components produce a time-domain signal, such as shown in FIGS. **1**, **2**B, and **3**B. The time-domain signal may include an analog or digital waveform. Alternatively, a time-domain signal may include a sequence of digital symbol values.

Each set of phase offsets $\Delta\Phi$ corresponds to a particular phase space or time offset. Each received data symbol is characterized by a data-modulated pulse centered at a particular time instant. The inclusion of phase selection in the reference signals used in the multipliers **2511**.**1** to **2511**.N of the first software module **2502** provides for selection of signal values at predetermined instants in time. Thus, the process of combining **2514** the phase-offset signals generated in the first module **2502** is part of a time-instant to symbol-mapping process. Decision processing **2507** provides for estimation of the received data. Decision processing **2507** is a mapping process that maps received signal values corresponding to each pulse (i.e., equally spaced instants in time used to transmit symbol values) into decision variables (i.e., estimated signal values).

FIG. **26**B illustrates a CI receiver, including a receiver module **2501**, a matched filter or projection module **2502**, a plurality M of integrators **2504**.**1** to **2504**.M, and a decision device **2507**. The projection module **2502** includes a discreet Fourier transform (e.g., FFT **2512**). Equivalently, other types of filters may be included, such as to select one or more subcarrier components allocated to a particular user. N frequency-domain components generated by the FFT **2512** are phase shifted by a plurality M of phase-shift systems (e.g., interval delay systems) **2510**.**1**-**2510**.M. The N signal components corresponding to each phase-shift system **2510**.**1**-**2510**.M are combined in an associated combiner **2514**.**1** to **2514**.M to generate a time-domain signal.

A plurality M of time-domain signals is output from the projection module **2502**. Each of the M time-domain signals is integrated over each symbol interval T_s by the integrators **2504**.**1** to **2504**.M. Signal values generated by the integrators **2504**.**1** to **2504**.M are processed by the decision module **2507** to generate a sequence of estimated data symbols.

Various embodiments may include variations in system configurations and the order of steps in which methods are provided. For example, the order of frequency-domain combining (illustrated by the combiners **2514**.**1** to **2514**.M) and time-domain combining (illustrated by the integrators **2504**.**1** to **2504**.M) may be switched. Multiple steps and/or multiple components may be consolidated.

FIG. **26**C illustrates a subcarrier weighting source code segment **2591** and a CI combining source code segment **2592** residing on a computer-readable medium **2599**. Source code segment **2591** is adapted to process one or more received channel measurements (such as frequency-domain or time-domain measurements) for generating a plurality of subcarrier weights. These weights are adapted to compensate for one or more channel effects, including, but not limited to, multipath, dispersion, and co-channel interference. The weights may be adapted to provide CI decoding. The weights may be adapted relative to one or more channel and/or data-quality measurements. The weights may be configured relative to data-processing measurements, such as hard-decision, soft-decision, and/or iterative feedback decision processing. The weights are typically applied to a plurality of subcarriers, such as frequency components produced by a filter bank or an FFT. Subcarrier weighting may include filtering, such as providing for acquiring subcarrier frequencies allocated to at least one predetermined user. Consequently, subcarrier weights may include both zero and non-zero values. Subcarrier weighting may include channel decoding, source decoding, spread-spectrum decoding, formatting, multiple-access decoding, demultiplexing, decryption, array processing, and/or modulation.

Source-code segment **2592** is adapted to combine the received and weighted carriers to generate a processed signal output, which is typically a sequence of symbols. At least one type of optimal combining may be provided. Code segment **2592** is adapted to receive as input at least one received signal, such as a sequence of data symbols. The received signal may be impressed onto the weights, weighted subcarriers, or waveforms generated from one or more superpositions of the weighted subcarriers. The weights are configured to map one or more input data symbols into one or more phase spaces. In some applications, data-modulated weights may be generated in source-code segment **2591**. In this case, source-code segment **2591** is adapted to process the received signal to generate at least one set of information-bearing weights.

FIG. **27**A illustrates a number M of CI receiver branches. A plurality of input couplers (e.g., antenna elements) **2701**.**1** to **2701**.M couple signals from a communications medium (e.g., a free-space channel, a waveguide, etc.) and process the signals. The input couplers **2701**.**1** to **2701**.M are typically adapted to perform any combination of front-end

receiver-side processing, including amplification, filtering, frequency conversion, and/or A/D conversion. Other types of processing may be performed. For example, a plurality of optional guard interval (e.g., cyclic prefix) removal circuits **2702.1** to **2702**.M may be incorporated in the input couplers **2701.1** to **2701**.M. Similarly, each of a plurality M of serial-to-parallel converters **2703.1** to **2703**.M may be included in the input couplers **2701.1** to **2701**.M or in each of a plurality M of invertible-transform (e.g., FFT) circuits **2704.1** to **2704**.M.

Each of the invertible-transform circuits **2704.1** to **2704**.M transforms an input time-domain signal into a plurality N of frequency-domain components. The components are weighted with at least one set of CI combining weights $\alpha_m(n)$, where m=1, . . . ,M and n=1, . . . , N, by a plurality M of component-weighting modules **2705.1** to **2705**.M. In the case where MMSE combining is employed, the weights am(n) are expressed by:

$$\alpha_m(n)=h_m^*(n)/(N|h_m(n)|^2+\sigma^2)$$

where $h_m(n)$ is the channel response for the nth frequency channel of the mth spatial subchannel, and σ^2 is the noise power. Other types and combinations of combining may be employed.

A plurality M of combiners, such as IFFTs **2706.1** to **2706**.M, combine the weighted frequency-domain components to generate a plurality of time-domain signals. Time-domain outputs of the IFFTs **2706.1** to **2706**.M are coupled to beam-forming modules **2707.1** to **2707**.M, which are adapted to provide beam-forming weights that cancel co-channel interference in a plurality of combiners **2708.1** to **2708**.M. Each combiner **2708.1** to **2708**.M may include a summing circuit, an adder, an accumulator, an integrator, or any appropriate invertible transform.

The beam-forming modules **2707.1** to **2707**.M and the combiners **2708.1** to **2708**.M may be adapted to perform any of various types and combinations of adaptive combining. In some applications, maximal ratio combining may be employed. Other combining schemes may be employed. Combining may include interference cancellation, multi-user detection, null steering, spatial interferometry multiplexing, etc. In some cases, space-time processing may be employed. Successive interference cancellation, as well as other multi-level cancellation techniques, can be used. In other cases, space-frequency processing may be provided. Channel decoding weights may be provided by either or both the component-weighting modules **2705.1** to **2705**.M and the beam-forming modules **2707.1** to **2707**.M. Symbols output by the combiners **2708.1** to **2708**.M are converted to a data stream by a parallel-to-serial converter **2709** prior to being demodulated and decoded **2710**.

In some disclosed aspects, the subcarriers may be selected for a particular user, such as in an orthogonal frequency division multiple access system. Subcarriers allocated to a particular user may be interleaved in frequency with subcarriers allocated to one or more other users. In another aspect of the invention, a different set of subcarriers is selected for each of a plurality of data symbols or data symbol groups transmitted by and/or to a particular user. A plurality of users may share a common set of subcarriers, yet share the channel via time division multiple access (TDMA), code division multiple access (CDMA), and/or space division multiple access (SDMA). Other multiple-access schemes may be employed. Similarly, different data symbols corresponding to a particular user may share the channel relative to the previously mentioned multiple-access schemes.

In one aspect, a signal generator or transmitter includes a subcarrier allocator, a pulse generator, a modulator, and a sequential pulse positioner. The subcarrier allocator assigns a predetermined set of subcarriers to a particular data symbol, user, or group of users. The pulse generator produces a plurality of pulses wherein the spectrum of each pulse or group of pulses is characterized by the set of subcarriers. The modulator modulates the pulses or subcarriers with at least one data symbol. The pulse positioner sequentially positions the modulated pulses.

A transmitter may include a polyphase, poly-amplitude code generator, a subcarrier allocator, a subcarrier weighting module, and a subcarrier combiner. The code generator produces at least one of a set of polyphase, poly-amplitude codes configured to produce a predetermined time-domain signal, such as a direct sequence coded signal. The transmitter may include a modulator adapted to modulate data onto the codes, the subcarriers, or the time-domain signal. The subcarrier weighting module impresses the polyphase, poly-amplitude codes onto a predetermined set of orthogonal subcarriers selected by the subcarrier allocator. The combiner combines the subcarriers to produce the time-domain signal.

A CI decoder may include receiver components illustrated in the figures and described throughout the specification and incorporated references. For example, a CI decoder may include an equalizer (such as a time-domain equalizer and/or a frequency-domain equalizer), a de-mapper, a de-interleaver, a decoder, a de-scrambler, a filter (such as a matched filter), an integrator, and/or a decision module.

CI receivers may be adapted to process either or both single-carrier and multicarrier signals. Frequency-domain analysis and processing of single-carrier signals may be performed relative to pulse characteristics. For example, number of subcarriers, subcarrier spacing, and window durations in receiver processing may be selected relative to physical signal parameters, such as pulse width, pulse shape, and pulse spacing.

In one aspect, a received signal is separated into a plurality of orthogonal subcarrier components by a time-domain to frequency-domain converter. The output of the converter is characterized by orthogonal poly-amplitude (and polyphase) coded data. The converter may be adapted to perform a Fourier transform, such as an FFT or a DFT. A combiner performs frequency-domain equalization and provides CI decoding of the coded data.

Functional aspects are described with respect to signal-waveform illustrations and corresponding descriptions. For example, FIG. **27**B illustrates a block transmission characterized by symbol duration T_s, and includes four orthogonal sinc-like pulse waveforms **341**, **342**, **343**, and **344**. Each pulse waveform (such as pulses **341**, **342**, **343**, and **344**) may be impressed with a unique data symbol.

A preceding block transmission includes orthogonal pulse waveforms **331**, **332**, **333**, and **334** and a following block transmission includes orthogonal pulse waveforms **351**, **352**, **353**, and **354**. Block transmissions are characteristic of multicarrier operation. For example, OFDM employs subcarrier blocks defined by uniform start and end times for each subcarrier, the difference in times typically being equal to the symbol duration T_s, or the symbol duration T_s plus a cyclic prefix. Cyclic prefixes, cyclic "post-fixes", or some other guard interval may be included in the signal plots, such as between the blocks shown in FIG. **27**B.

Since the pulse waveforms **341**, **342**, **343**, and **344** have the same starting and ending times, the waveform shapes **341**, **342**, **343**, and **344** are different from each other. For

example, waveform **341** has all of its sidelobes to the right of its main lobe, whereas all of the sidelobes of waveform **344** occur to the left of the main lobe. This tends to increase the interference in systems that perform time-domain equalization and Rake reception. In particular, inter-pulse interference is not limited to nearby pulses because the side-lobe structure is periodic, or cyclic, over the symbol duration Ts. For example, the side-lobe amplitude (and thus, interference) of waveform **341** diminishes across pulse **342** and increases across pulse **344**. In this particular example, the pulse waveforms may be generated from four orthogonal subcarrier frequencies, which are not shown.

FIG. **28**A illustrates a CI transmitter that includes a CI coder **2802**, an IDFT (such as IFFT **2804**), a polyphase filter **2809**, and a transmission system **2807**. The CI coder **2802** is adapted to map multiple input data symbols onto a plurality of subcarriers. This is achieved via CI coding. The IFFT **2804** is adapted to receive the plural sub-channel signals and transform them into plural time-domain signals. The polyphase filter **2809** receives the time-domain signals and outputs a plurality of filtered signals. The polyphase filter **2809** may be adapted to provide the filtered signals with a predetermined spectral profile of selected subcarriers. Polyphase filters operate by multiplying selected phases, or samples, of a filter impulse response with samples of one or more input signals.

FIG. **28**B illustrates a CI reception method that implies an apparatus for carrying out the method. A receiver step **2851** processes transmissions from a communication channel to generate received signals. Time-domain to frequency-domain conversion and filtering the resulting frequency-domain signal is achieved by projecting the received signal onto an orthonormal basis of the transmitted signals (such as indicated by a projection step **2852**). Projecting a received multicarrier signal onto an orthonormal basis of a particular user's transmitted signal produces frequency-domain signal components $r=(r_0, r_1, \ldots, r_{N-1})$ corresponding to that user's assigned subcarriers. Equivalently, the projection of a received signal onto an orthonormal basis excludes signals (e.g., carriers and/or phase spaces) that do not correspond to that orthonormal basis.

Frequency-domain to time-domain conversion is achieved by combining **2854** the received frequency-domain components produced by either band-pass filtering or projection onto a predetermined orthonormal basis. The combined frequency-domain components produce a time-domain signal. The step of recovering symbols is provided in the decision process **2857**.

FIG. **28**C illustrates a CI receiver including a receiver module **2861**, a matched filter or projection module **2862**, a plurality M of integrators **2864.1** to **2864**.M, and a decision device or module **2867**. The projection module **2862** includes a DFT, such as an FFT **2872**. Equivalently, other types of filters may be included, such as to select one or more subcarrier components allocated to a particular user. N frequency-domain components generated by the FFT **2872** are phase shifted by a plurality M of phase-shift systems (e.g., interval-delay systems) **2870.1** to **2870**.M. The N signal components corresponding to each phase-shift system **2870.1** to **2870**.M are combined in an associated combiner **2874.1** to **2874**.M to generate a time-domain signal.

A plurality M of time-domain signals is output from the projection module **2862**. Each of the M time-domain signals is integrated over each symbol interval T_s, by the integrators **2864.1** to **2864**.M. Signal values generated by the integrators **2864.1** to **2864**.M are processed by the decision module **2867** to generate a sequence of estimated data symbols.

Various embodiments of the invention may include variations in system configurations and the order of steps in which methods are provided. Multiple steps and/or multiple components may be consolidated.

FIG. **29**A illustrates a block waveform including a set of N orthogonal CI pulse waveforms **2941** to **2949** having a duration of T_s. CI pulse waveforms (such as pulse **2941** to **2949**) may be generated from a superposition of orthogonal subcarriers. Each of the pulse waveforms **2941** to **2949**, which represents a CI phase space, is modulated with one of a plurality of data symbols d_1 to d_N, respectively. In one aspect of the invention, each data symbol d_1 to d_N includes a code chip of an orthogonal code, such as Hadamard-Walsh (Walsh) code or a Walsh code multiplied by a long code. Pseudo-orthogonal coding may be employed. Other codes, including Gold codes, Barker codes, Kasami codes, CI codes, and/or DeBot codes, may be modulated onto the pulses **2941** to **2949**. The subcarrier weights resulting from the application of these time-domain codes provide orthogonal or pseudo-orthogonal CI codes expressed as frequency-domain codes, which are characterized by low PAPR in multicarrier synthesis.

FIG. **29**B illustrates a plurality of CI subcarrier weights w_1 to w_N generated from a set of data symbols d_1 to d_N mapped to a number N of orthogonal CI phase spaces. A CI code matrix of dimension N×N containing polyphase code chips is multiplied by a set of data vectors or a data matrix. In particular, each column of the CI code matrix (such as column **2951**) is multiplied by a corresponding data symbol (such as symbol d_2). In some cases, the CI code matrix and an N×N data matrix (not shown) may be provided with an element-by-element multiplication. Each row of a product matrix resulting from the product of the data symbols d_1 to d_N with the CI code matrix are summed to produce the subcarrier weights w_1 to w_N. For example, elements in row **2953**, after multiplication by the data symbols d_1 to d_N, are summed to generate weight w_2. Since rows and columns of the basic CI code matrix resemble the vectors of complex values used in DFTs, the subcarrier weights w_1 to w_N can be calculated using a fast transform algorithm.

FIG. **30**A illustrates transmitter apparatus and method embodiments of the present invention. An input data stream is serial-to-parallel converted and processed in a subcarrier-weighting module **3002**. The weighting module **3002** provides one or more orthogonal poly-amplitude codes to the subcarriers. The codes may also be characterized by polyphase values. The codes are typically indicative of the data and are used as subcarrier weights. In this case, block codes are provided. The weights may be used to synthesize at least one predetermined direct-sequence (e.g., DSSS or DS-CDMA) waveform. The weights are converted to at least one time-domain waveform in a frequency-domain to time-domain converter **3004**, such as an inverse Fourier transform.

The time-domain output of the converter **3004** is processed in a transmission system **3006**, which may optionally provide a guard interval or cyclic prefix (and/or postfix), perform digital-to-analog conversion, up convert the signal, provide amplification, optionally filter the signal, and provide for coupling the signal into a communication channel. Other transmitter-side signal-processing operations may be provided, including MIMO (e.g., array) processing. This transmitter embodiment may be adapted to generate multicarrier signals configured to appear as a single-carrier signal in the time domain.

FIG. **30**B shows a receiver apparatus and method of the invention. A receiver system **3001** couples single-carrier

and/or multicarrier transmissions from a communication channel, and adapts the received signals for baseband or IF processing. In particular, the receiver system **3001** may perform filtering, amplification, down conversion, analog-to-digital conversion, cyclic-prefix removal, and/or other receiver processing operations that are well known in the art. The receiver system **3001** may be adapted to perform MIMO (e.g., array) processing. A received signal is separated into a plurality of orthogonal subcarrier components by a time-domain to frequency-domain converter **3003**, such as a Fourier transform. Frequency-domain equalization and decoding of the orthogonal poly-amplitude codes is performed in a combiner **3005**. The combiner **3005** multiplies the frequency bin values output by the converter **3003** with a complex conjugate of at least one of poly-amplitude code. A decision module **3007** is adapted to process the combined signal values using any combination of hard-decision and soft-decision processing.

In one aspect, a received signal for at least one user is separated into orthogonal frequency components. Channel compensation (e.g., equalization) and combining are performed to provide estimates of the transmitted symbols. ISI may be compensated via any combination of equalization and multi-user detection.

Embodiments may employ any of a number of techniques for providing channel estimating. For many of these methods, a block of pilot chips, tones, or other known signals may be inserted into the transmitted waveform. Known symbols may be mapped to CI phase spaces. Training symbols may be provided to individual subcarriers. In other embodiments, various types of coded training symbols may be transmitted. Blind adaptive estimation and equalization may be employed.

FIG. **31**A illustrates a communication method of the invention. A plurality of orthogonal polyphase/poly-amplitude codes are generated **3061** in a transmitter. The codes are modulated **3062** with different data symbols. A-frequency-domain to time-domain conversion **3063** of the modulated codes is provided to generate a time-domain output. A cyclic prefix or guard interval is optionally prepended **3064** to the time-domain output, followed by transmission processing **3065** adapted to process the signal for transmission into a communication channel **99**.

A receiver process **3071** couples the transmission from the channel **99** and performs receiver system processes typically performed to convert a received signal to a digital or analog baseband or IF signal. An optional cyclic-prefix removal **3072** may be performed as necessary prior to time-domain to frequency-domain conversion **3073**. Interfering frequency-domain signals are separated in an interference-cancellation process **3074**, which may optionally employ frequency-domain and/or time-domain equalization. Separated signal values are then post processed, which may include decision processing **3075**.

FIG. **31**B illustrates a method of receiving single-carrier or multicarrier signals, including providing for receiver-system processing **3151** of received signals, performing a time-domain to frequency-domain conversion **3153** of the received signals to produce a plurality of orthogonal subcarrier values, providing for frequency-domain-equalization of the subcarrier values, providing for CI decoding **3157** (which includes combining), and providing for decision processing **3159**.

FIG. **32** illustrates a sub-space/subcarrier processor receiver of the invention. A plurality M of receiver systems **3251** to **3259** is adapted to couple a plurality of interfering single-carrier or multicarrier signals from a communication channel. M receiver branches are provided for frequency-domain analysis of received signals. Optional cyclic prefix removal modules **3261** may be provided. A set of M time-domain to frequency-domain converters, such as DFTs **3271** to **3279**, separate received signals in each branch into a plurality N of subcarrier values. Each of a plurality of sub-space processors **3281** to **3289** processes the subcarrier values. For example, N sub-space processors **3281** to **3289** can process M signals at a time that were mapped into each of the N subcarrier frequencies.

The output of each sub-space processor **3281** to **3289** is characterized by up to M sub-space values. Each of a plurality of CI decoders **3291** to **3299**, such as CI block decoders or CI sliding window decoders, combine subcarrier values corresponding to a particular subspace.

FIG. **33**A illustrates basic components of CI signal generation software residing on a computer-readable medium **3399**. CI signal generation software is typically configured to control the function and transmission-signal output of a single carrier or multicarrier transmitter. In some cases, a CI transmission may be characterized as a single-carrier signal in the time domain having a plurality of predetermined frequency-domain (or spectral) components.

A subcarrier allocation source code segment **3301** is adapted to generate a plurality of subcarriers allocated to at least one user or allocate a plurality of input subcarriers (not shown) to a particular user. A subcarrier weighting source code segment **3302** is adapted to provide complex weights (e.g., CI codes) to a plurality of the allocated subcarriers. The weights are configured to map one or more input data symbols into one or more phase spaces.

The computer-readable medium **3399** may include any item of manufacture adapted to store or convey software and/or firmware. The source-code segments **3301** and **3302** may reside on a physical memory storage device, such as any magnetic, electrical, or optical device adapted to store data and/or computer command instructions. The source-code segments **3301** and **3302** may be implemented as gate configurations on a programmable or integrated circuit. Other means for arranging physical devices and/or electromagnetic phenomena may be employed to convey the function of the source-code segments **3301** and **3302**. Accordingly, the computer-readable medium **3399** may include any combination of FPGAs, ASICs, transient memory, and persistent memory.

Subcarrier allocation may include generating subcarriers, providing for receiving input subcarriers, retrieving subcarriers or superposition waveforms from memory (e.g., a look-up table), or selecting non-zero (or equivalently, zero) valued input bin weights of an invertible transform, such as a DFT. In some applications, subcarrier allocation can include pulse shaping, controlling symbol durations, and/or selecting subcarrier frequency spacing. Some frequencies may be selected or avoided relative to channel conditions, bandwidth requirements, and/or interference.

The subcarrier allocation source code segment **3301** and subcarrier weighting source code segment **3302** may be implemented in one program. Similarly, other processing operations typically performed in a communication system transmitter may be implemented in, or in addition to, the source-code segments **3301** and **3302**. It should be appreciated that subcarrier allocation, selection, and assignment can include providing subcarriers for system control and/or monitoring. Subcarrier allocation, as described throughout the specification may include providing for pilot tones, training sequences, and/or other subcarriers allocated to other system-control functions. Subcarrier weighting may

include channel coding, source coding, spread-spectrum coding, formatting, multiple-access coding, multiplexing, encryption, modulation, and/or array processing. Systems and methods illustrated herein and described throughout the specification may be implemented as source-code segments residing on one or more computer-readable mediums.

Network control in CI communications may be adapted to enable users to share network resources (e.g., bandwidth). For example, channel resources in the form of phase spaces and/or subcarriers may be allocated to each user relative to their level of service. Bandwidth may be allocated to users relative-to any combination of individual throughput requirements, purchased level of service, and availability of bandwidth.

FIG. **33**B illustrates a subcarrier weighting source code segment **3391** and a CI combining source code segment **3392** residing on a computer-readable medium **3399**. Source code segment **3391** is adapted to process one or more received channel measurements (such as frequency-domain or time-domain measurements) for generating a plurality of subcarrier weights. These weights are adapted to compensate for one or more channel effects, including, but not limited to, multipath, dispersion, and co-channel interference. The weights may be adapted to provide CI decoding. The weights may be adapted relative to one or more channel and/or data-quality measurements. The weights may be configured relative to data-processing measurements, such as hard-decision, soft-decision, and/or iterative feedback decision processing. The weights are typically applied to a plurality of subcarriers, such as frequency components produced by a filter bank or an FFT. Subcarrier weighting may include filtering, such as providing for acquiring subcarrier frequencies allocated to at least one predetermined user. Consequently, subcarrier weights may include both zero and non-zero values. Subcarrier weighting may include channel decoding, source decoding, spread-spectrum decoding, formatting, multiple-access decoding, demultiplexing, decryption, array processing, and/or modulation.

Source-code segment **3392** is adapted to combine the received and weighted carriers to generate a processed signal output, which is typically a sequence of symbols. At least one type of optimal combining may be provided. Code segment **3392** is adapted to receive as input at least one received signal, such as a sequence of data symbols. The received signal may be impressed onto the weights, weighted subcarriers, or waveforms generated from one or more superpositions of the weighted subcarriers. The weights are configured to map one or more input data symbols into one or more phase spaces. In some applications, data-modulated weights may be generated in source-code segment **3391**. In this case, source-code segment **3391** is adapted to process the received signal to generate at least one set of information-bearing weights.

All publications and patent applications mentioned in this specification are herein incorporated by reference to the same extent as if each individual publication or patent application was specifically and individually incorporated by reference.

Various embodiments of the invention may include variations in system configurations and the order of steps in which methods are provided. In many cases, multiple steps and/or multiple components may be consolidated.

The method and system embodiments described herein merely illustrate the principles of the invention. It should be appreciated that those skilled in the art will be able to devise various arrangements, which, although not explicitly described or shown herein, embody the principles of the invention and are included within its spirit and scope. Furthermore, all examples and conditional language recited herein are intended to be only for pedagogical purposes to aid the reader in understanding the principles of the invention. This disclosure and its associated references are to be construed as being without limitation to such specifically recited examples and conditions. Moreover, all statements herein reciting principles, aspects, and embodiments of the invention, as well as specific examples thereof, are intended to encompass both structural and functional equivalents thereof. Additionally, it is intended that such equivalents include both currently known equivalents as well as equivalents developed in the future, i.e., any elements developed that perform the same function, regardless of structure.

It should be appreciated by those skilled in the art that the block diagrams herein represent conceptual views of illustrative circuitry, algorithms, and functional steps embodying the principles of the invention. Similarly, it should be appreciated that any flow charts, flow diagrams, signal diagrams, system diagrams, codes, and the like represent various processes which may be substantially represented in computer-readable medium and so executed by a computer or processor, whether or not such computer or processor is explicitly shown.

The functions of the various elements shown in the drawings, including functional blocks labeled as "processors" or "systems," may be provided through the use of dedicated hardware as well as hardware capable of executing software in association with appropriate software. When provided by a processor, the functions may be provided by a single dedicated processor, by a shared processor, or by a plurality of individual processors, some of which may be shared. Moreover, explicit use of the term "processor" or "controller" should not be construed to refer exclusively to hardware capable of executing software, and may implicitly include, without limitation, digital signal processor (DSP) hardware, read-only memory (ROM) for storing software, random access memory (RAM), and non-volatile storage. Other hardware, conventional and/or custom, may also be included. Similarly, the function of any component or device described herein may be carried out through the operation of program logic, through dedicated logic, through the interaction of program control and dedicated logic, or even manually, the particular technique being selectable by the implementer as more specifically understood from the context.

Any element expressed herein as a means for performing a specified function is intended to encompass any way of performing that function including, for example, a combination of circuit elements which performs that function or software in any form, including, therefore, firmware, microcode or the like, combined with appropriate circuitry for executing that software to perform the function. The invention as defined herein resides in the fact that the functionalities provided by the various recited means are combined and brought together in the manner which the operational descriptions call for. Applicant regards any means which can provide those functionalities as equivalent as those shown herein.

The invention claimed is:

1. A method for receiving an Orthogonal Frequency Division Multiplexing (OFDM) signal transmitted by a user device in a wireless network, the method comprising:

determining a plurality of subcarrier frequencies allocated to the user device;

converting the OFDM signal to a plurality of frequency-domain values corresponding to the plurality of subcarrier frequencies; and

decoding the plurality of frequency-domain values to recover a plurality of data symbols encoded by the user device on the plurality of subcarrier frequencies;

wherein decoding employs a plurality of codes that are inverse to, complex-conjugate of, or complementary to a set of complex-valued codes that the user device employs to shape the OFDM signal into a superposition of cyclic-shifted pulse waveforms that each has one of the plurality of data symbols modulated thereon.

2. The method of claim **1**, wherein each of the plurality of codes employed for decoding comprises a different vector of linear phase offsets.

3. The method of claim **1**, wherein the cyclic-shifted waveforms have cyclic shifts that cause the cyclic-shifted waveforms to be orthogonal, and each of the plurality of codes employed for decoding comprises a set of linear phase offsets that corresponds to one of the cyclic shifts.

4. The method of claim **1**, wherein the complex-valued codes cause the cyclic-shifted waveforms to be Sinc waveforms, and the plurality of codes is configured to decode the Sinc waveforms.

5. The method of claim **1**, wherein the plurality of subcarrier frequencies has a frequency spacing f_s, and the plurality of cyclic-shifted waveforms are periodic over a symbol interval $T_s=1/f_s$.

6. The method of claim **1**, wherein converting the OFDM signal to a plurality of frequency-domain values uses a discrete Fourier transform.

7. The method of claim **1**, further comprising removing at least one of a guard interval, a cyclic prefix, and a cyclic postfix from the OFDM signal before converting the OFDM signal to the plurality of frequency-domain values.

8. The method of claim **1**, wherein converting the OFDM signal to the plurality of frequency-domain values provides for orthogonal frequency division multiple access for the user device and at least one other user device.

9. The method of claim **1**, wherein an mth one of the plurality of codes is expressed as a set of N code chips for a set of integers $n=\{0, \ldots, N-1\}$, wherein each code chip is expressed by $e^{i2\pi nm/N}$, wherein i is the square root of −1, and π is Pi.

10. An apparatus for receiving an Orthogonal Frequency Division Multiplexing (OFDM) signal transmitted by a user device in a wireless network, the apparatus comprising:

at least one processor; and

a non-transitory computer-readable memory communicatively coupled to the at least one processor, the non-transitory computer-readable memory including a set of instructions stored thereon and executable by the at least one processor for:

determining a plurality of subcarrier frequencies allocated to the user device;

converting the OFDM signal to a plurality of frequency-domain values corresponding to the plurality of subcarrier frequencies; and

decoding the plurality of frequency-domain values to recover a plurality of data symbols encoded by the user device on the plurality of subcarrier frequencies;

wherein decoding employs a plurality of codes that are inverse to, complex-conjugate of, or complementary to a set of complex-valued codes that the user device employs to shape the OFDM signal into a superposition of cyclic-shifted pulse waveforms that each has one of the plurality of data symbols modulated thereon.

11. The apparatus of claim **10**, wherein each of the plurality of codes employed for decoding comprises a different vector of linear phase offsets.

12. The apparatus of claim **10**, wherein the cyclic-shifted waveforms have cyclic shifts that cause the cyclic-shifted waveforms to be orthogonal, and each of the plurality of codes employed for decoding comprises a set of linear phase offsets that corresponds to one of the cyclic shifts.

13. The apparatus of claim **10**, wherein the complex-valued codes cause the cyclic-shifted waveforms to be Sinc waveforms, and the plurality of codes is configured to decode the Sinc waveforms.

14. The apparatus of claim **10**, wherein the plurality of subcarrier frequencies has a frequency spacing f_s, and the plurality of cyclic-shifted waveforms are periodic over a symbol interval $T_s=1/f_s$.

15. The apparatus of claim **10**, wherein converting the OFDM signal to a plurality of frequency-domain values uses a discrete Fourier transform.

16. The apparatus of claim **10**, wherein the non-transitory computer-readable memory further includes instructions stored thereon and executable by the at least one processor for removing at least one of a guard interval, a cyclic prefix, and a cyclic postfix from the OFDM signal before converting the OFDM signal to the plurality of frequency-domain values.

17. The apparatus of claim **10**, wherein converting the OFDM signal to the plurality of frequency-domain values provides for orthogonal frequency division multiple access for the user device and at least one other user device.

18. The apparatus of claim **10**, wherein an mth one of the plurality of codes is expressed as a set of N code chips for a set of integers $n=\{0, \ldots, N-1\}$, wherein each code chip is expressed by $e^{i2\pi nm/N}$, wherein i is the square root of −1, and π is Pi.

19. A computer program product for receiving an Orthogonal Frequency Division Multiplexing (OFDM) signal transmitted by a user device in a wireless network, the computer program product comprising a non-transitory computer readable storage device having computer readable program code stored therein, said program code containing instructions executable by one or more processors of a computer system for:

determining a plurality of subcarrier frequencies allocated to the user device;

converting the OFDM signal to a plurality of frequency-domain values corresponding to the plurality of subcarrier frequencies; and

decoding the plurality of frequency-domain values to recover a plurality of data symbols encoded by the user device on the plurality of subcarrier frequencies;

wherein decoding employs a plurality of codes that are inverse to, complex-conjugate of, or complementary to a set of complex-valued codes that the user device employs to shape the OFDM signal into a superposition of cyclic-shifted pulse waveforms that each has one of the plurality of data symbols modulated thereon.

20. The computer program product of claim **19**, wherein each of the plurality of codes employed for decoding comprises a different vector of linear phase offsets.

21. The computer program product of claim **19**, wherein the cyclic-shifted waveforms have cyclic shifts that cause the cyclic-shifted waveforms to be orthogonal, and each of the plurality of codes employed for decoding comprises a set of linear phase offsets that corresponds to one of the cyclic shifts.

22. The computer program product of claim **19**, wherein the complex-valued codes cause the cyclic-shifted waveforms to be Sinc waveforms, and the plurality of codes is configured to decode the Sinc waveforms.

23. The computer program product of claim **19**, wherein the plurality of subcarrier frequencies has a frequency spacing f_s, and the plurality of cyclic-shifted waveforms are periodic over a symbol interval $T_s=1/f_s$.

24. The computer program product of claim **19**, wherein converting the OFDM signal to a plurality of frequency-domain values uses a discrete Fourier transform.

25. The computer program product of claim **19**, wherein the non-transitory computer-readable storage device further includes instructions stored therein and executable by the one or more processors for removing at least one of a guard interval, a cyclic prefix, and a cyclic postfix from the OFDM signal before converting the OFDM signal to the plurality of frequency-domain values.

26. The computer program product of claim **19**, wherein converting the OFDM signal to the plurality of frequency-domain values provides for orthogonal frequency division multiple access for the user device and at least one other user device.

27. The computer program product of claim **19**, wherein an mth one of the plurality of codes is expressed as a set of N code chips for a set of integers $n=\{0, \ldots, N-1\}$, wherein each code chip is expressed by $e^{i2\pi nm/N}$, wherein i is the square root of −1, and π is Pi.

* * * * *