SCORE Placeholder Sheet for IFW Content

Application Number: 16544348 Document Date: 07/29/2021

The presence of this form in the IFW record indicates that the following document type was received in electronic format on the date identified above. This content is stored in the SCORE database.

Since this was an electronic submission, there is no physical artifact folder, no artifact folder is recorded in PALM, and no paper documents or physical media exist. The TIFF images in the IFW record were created from the original documents that are stored in SCORE.

- Drawing

At the time of document entry (noted above):

- USPTO employees may access SCORE content via DAV or via the SCORE web page.
- External customers may access SCORE content via PAIR using the Supplemental Content tab.

Amended Clean Drawing Sheet

	$s_0(\,)$	$s_1(\,)$	$s_2(\,)$	$s_{N-1}(\,)$
$w_1 = \Sigma(\,)$:	$e^{i2\pi(0)(0)/N}$	$e^{i2\pi(1)(0)/N}$	$e^{i2\pi(2)(0)/N}$	$e^{i2\pi(N-1)(0)/N}$
$w_2 = \Sigma(\,)$:	$e^{i2\pi(0)(1)/N}$	$e^{i2\pi(1)(1)/N}$	$e^{i2\pi(2)(1)/N}$	$e^{i2\pi(N-1)(1)/N}$
$w_3 = \Sigma(\,)$:	$e^{i2\pi(0)(2)/N}$	$e^{i2\pi(1)(2)/N}$	$e^{i2\pi(2)(2)/N}$	$e^{i2\pi(N-1)(2)/N}$
$w_N = \Sigma(\,)$:	$e^{i2\pi(0)(N-1)/N}$	$e^{i2\pi(1)(N-1)/N}$	$e^{i2\pi(2)(N-1)/N}$	$e^{i2\pi(N-1)(N-1)/N}$

701

703

FIG. 7

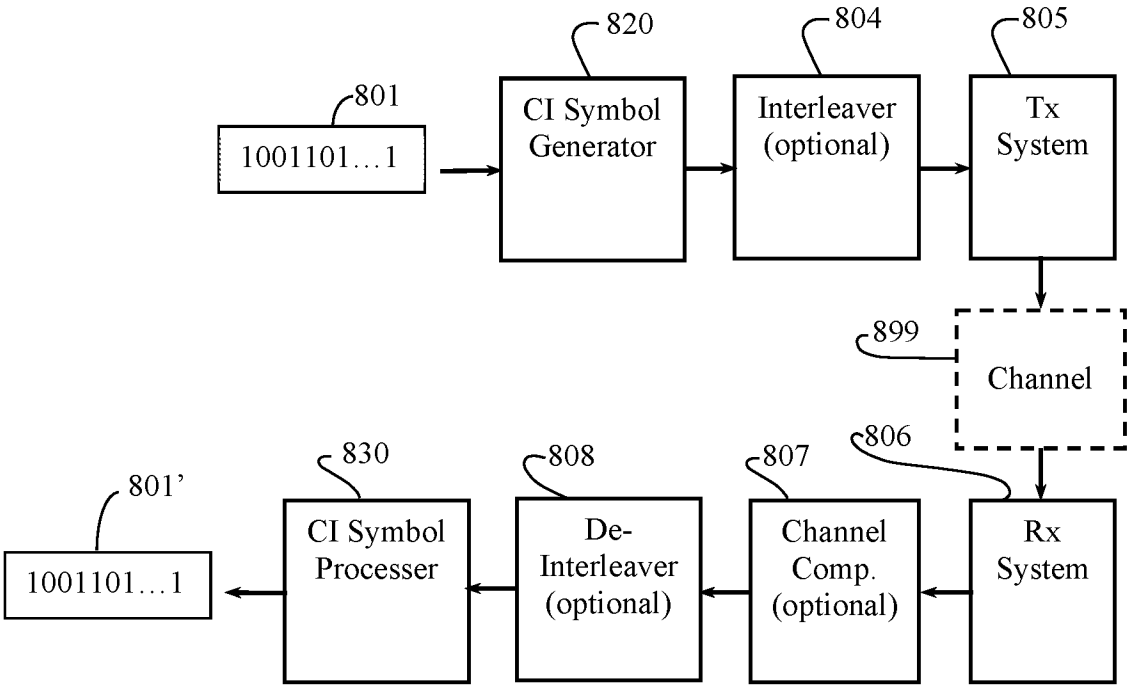

FIG. 8A

Amended Marked Up

	s_0 ( )	s_1 ( ) 701	s_2 ( )	s_{N-1} ( )
$w_1 = \Sigma(\,)$:	$e^{i2\pi(0)(0)/\cancel{(N-1)}\,N}$	$e^{i2\pi(1)(0)/\cancel{(N-1)}\,N}$	$e^{i2\pi(2)(0)/\cancel{(N-1)}\,N}$	$e^{i2\pi(N-1)(0)/\cancel{(N-1)}\,N}$
$w_2 = \Sigma(\,)$:	$e^{i2\pi(0)(1)/\cancel{(N-1)}\,N}$	$e^{i2\pi(1)(1)/\cancel{(N-1)}\,N}$	$e^{i2\pi(2)(1)/\cancel{(N-1)}\,N}$	$e^{i2\pi(N-1)(1)/\cancel{(N-1)}\,N}$
$w_3 = \Sigma(\,)$:	$e^{i2\pi(0)(2)/\cancel{(N-1)}\,N}$	$e^{i2\pi(1)(2)/\cancel{(N-1)}\,N}$	$e^{i2\pi(2)(2)/\cancel{(N-1)}\,N}$ 703	$e^{i2\pi(N-1)(2)/\cancel{(N-1)}\,N}$
$w_N = \Sigma(\,)$:	$e^{i2\pi(0)(N-1)/\cancel{(N-1)}\,N}$	$e^{i2\pi(1)(N-1)/\cancel{(N-1)}\,N}$	$e^{i2\pi(2)(N-1)/\cancel{(N-1)}\,N}$	$e^{i2\pi(N-1)(N-1)/\cancel{(N-1)}\,N}$

FIG. 7 (Amended)

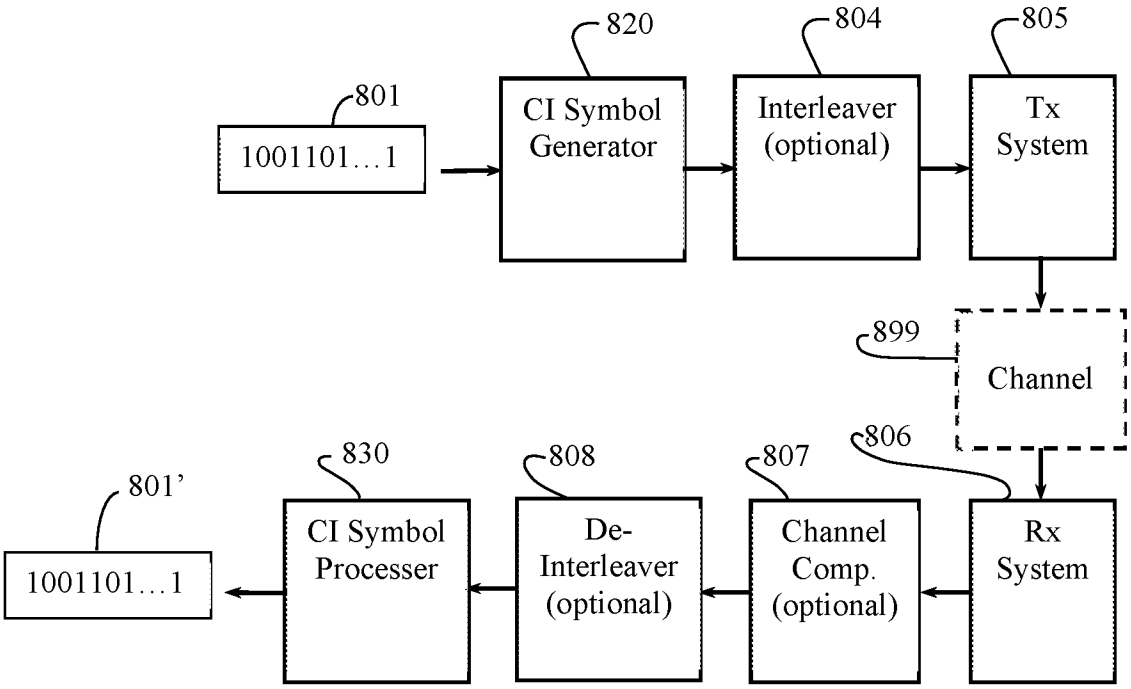

FIG. 8A

Electronic Patent Application Fee Transmittal

Application Number:	16544348
Filing Date:	19-Aug-2019
Title of Invention:	SINGLE CARRIER FREQUENCY DIVISION MULTIPLE ACCESS BASEBAND SIGNAL GENERATION
First Named Inventor/Applicant Name:	Steve Shattil
Filer:	Steven J Shattil
Attorney Docket Number:	CBF-000.C4.C2

Filed as Small Entity

Filing Fees for Utility under 35 USC 111(a)

Description	Fee Code	Quantity	Amount	Sub-Total in USD($)
Basic Filing:				
Pages:				
Claims:				
Miscellaneous-Filing:				
Petition:				
Patent-Appeals-and-Interference:				
Post-Allowance-and-Post-Issuance:				
CERTIFICATE OF CORRECTION	2811	1	160	160

Description	Fee Code	Quantity	Amount	Sub-Total in USD($)
Extension-of-Time:				
Miscellaneous:				
			Total in USD ($)	**160**

Electronic Acknowledgement Receipt

EFS ID:	43379509
Application Number:	16544348
International Application Number:	
Confirmation Number:	1045
Title of Invention:	SINGLE CARRIER FREQUENCY DIVISION MULTIPLE ACCESS BASEBAND SIGNAL GENERATION
First Named Inventor/Applicant Name:	Steve Shattil
Customer Number:	74284
Filer:	Steven J Shattil
Filer Authorized By:	
Attorney Docket Number:	CBF-000.C4.C2
Receipt Date:	29-JUL-2021
Filing Date:	19-AUG-2019
Time Stamp:	15:02:11
Application Type:	Utility under 35 USC 111(a)

Payment information:

Submitted with Payment	yes
Payment Type	EFT
Payment was successfully received in RAM	$160
RAM confirmation Number	E20217SF02440809
Deposit Account	603863
Authorized User	steven shattil

The Director of the USPTO is hereby authorized to charge indicated fees and credit any overpayment as follows:

37 CFR 1.16 (National application filing, search, and examination fees)

37 CFR 1.17 (Patent application and reexamination processing fees)

37 CFR 1.19 (Document supply fees)

37 CFR 1.20 (Post Issuance fees)

37 CFR 1.21 (Miscellaneous fees and charges)

File Listing:

Document Number	Document Description	File Name	File Size(Bytes)/ Message Digest	Multi Part /.zip	Pages (if appl.)
1	Request for Certificate of Correction	sb0044_CBF000C4C2_p1.pdf	187595 abe7394229db5142cb6d858602de214e845387a4	no	2
Warnings:					
Information:					
2	Request for Certificate of Correction	sb0044_CBF000C4C2_p2.pdf	180051 f4fe09b884488f183f10312c2ac12b47e2fdba5e	no	2
Warnings:					
Information:					
3	Drawings-only black and white line drawings	FIG07clean.pdf	118990 4eaec3b34a42eca9566ff920589d24743356c4a3	no	1
Warnings:					
Information:					
4	Drawings-other than black and white line drawings	FIG07markedup.pdf	173939 8848a85e23f77c36d3f38e7cb7cf97c80f4b53c3	no	1
Warnings:					
Information:					
5	Transmittal Letter	CBF000C4C2_CertificateofCorrectionTransmittal.pdf	97868 18e77fdd680bfe769a57e047b2c17b9e746ae044	no	2
Warnings:					
Information:					
6	Fee Worksheet (SB06)	fee-info.pdf	38013 173f2b8b69019b0d81294fffce811dec694ec310	no	2
Warnings:					
Information:					

Total Files Size (in bytes):	796456

This Acknowledgement Receipt evidences receipt on the noted date by the USPTO of the indicated documents, characterized by the applicant, and including page counts, where applicable. It serves as evidence of receipt similar to a Post Card, as described in MPEP 503.

New Applications Under 35 U.S.C. 111
If a new application is being filed and the application includes the necessary components for a filing date (see 37 CFR 1.53(b)-(d) and MPEP 506), a Filing Receipt (37 CFR 1.54) will be issued in due course and the date shown on this Acknowledgement Receipt will establish the filing date of the application.
National Stage of an International Application under 35 U.S.C. 371
If a timely submission to enter the national stage of an international application is compliant with the conditions of 35 U.S.C. 371 and other applicable requirements a Form PCT/DO/EO/903 indicating acceptance of the application as a national stage submission under 35 U.S.C. 371 will be issued in addition to the Filing Receipt, in due course.
New International Application Filed with the USPTO as a Receiving Office
If a new international application is being filed and the international application includes the necessary components for an international filing date (see PCT Article 11 and MPEP 1810), a Notification of the International Application Number and of the International Filing Date (Form PCT/RO/105) will be issued in due course, subject to prescriptions concerning national security, and the date shown on this Acknowledgement Receipt will establish the international filing date of the application.

IN THE UNITED STATES PATENT AND TRADEMARK OFFICE

In re Letters Patent of: Steve Shattil

Appl. No. 16/544,348

Patent No. 11,025,468

Issued 6/21/2021

For: SINGLE CARRIER FREQUENCY DIVISION MULTIPLE ACCESS BASEBAND SIGNAL GENERATION

REQUEST FOR CERTIFICATE OF CORRECTION PURSUANT TO 37 CFR 1.323

Attention: Certificate of Corrections Branch

Commissioner for Patents

P.O. Box 1450

Alexandria, VA 22313-1450

Dear Sir:

Upon reviewing the above-identified patent, Patentee noted typographical errors which should be corrected.

In the Drawings:

In FIG. 7, in the exponential of each matrix element, please amend the denominator "(N-1)" to read "N", as shown in the attached Replacement Drawing sheet 7 (clean and marked-up versions).

In the Specification:

Col. 14, line 57-58:

Please amend -- $f(\phi) = \{e^{j\theta 1}, e^{j\theta 2},\ldots,e^{j\theta N}\} = \{e^{j0}, e^{j2\pi k/N},\ldots, e^{j(N-1)\cdot 2\pi k/N}\}$ --

to read -- $f(\phi) = \{e^{j\phi 1}, e^{j\phi 2},\ldots,e^{j\phi N}\} = \{e^{j0}, e^{j2\pi k/N},\ldots, e^{j(N-1)\cdot 2\pi k/N}\}$ --

Col. 14, line 66:

Please amend -- $\{t_1, t_2, \ldots, t_{N-1}\} = \{1/f_s, 2/f_s, \ldots, (N-1)//f_s\}$. --

to read -- $\{t_1, t_2, \ldots, t_{N-1}\} = \{1/f_s, 2/f_s, \ldots, (N-1)/f_s\}$. --

Col. 15, line 4-5:

Please amend -- $\{t'_1, t'_2, \ldots, t'_{N-1}\} = \{1/f_s, 2/f_s, \ldots, (N-1)//f_s\}$. --

to read -- $\{t'_1, t'_2, \ldots, t'_{N-1}\} = 1/(2Nf_s) + \{1/f_s, 2/f_s, \ldots, (N-1)/f_s\}$. --

The errors were found in the application as filed by applicant. The fee set forth in 37 CFR 1.20(a) accompanies this letter.

The errors now sought to be corrected are inadvertent typographical errors of which does not involve new matter or require reexamination.

Transmitted herewith is a proposed Certificate of Correction effecting such amendment. Patentee respectfully solicits the granting of the requested Certificate of Correction.

Respectfully submitted,

/Steven J Shattil/

Steven J. Shattil, Reg. No. 40,170
P.O. Box 17355
Boulder, CO 80308-0355
(720) 234-4351

PTO/SB/44 (09-07)
Approved for use through 03/31/2023. OMB 0651-0033
U.S. Patent and Trademark Office; U.S. DEPARTMENT OF COMMERCE
Under the Paperwork Reduction Act of 1995, no persons are required to respond to a collection of information unless it displays a valid OMB control number.
(Also Form PTO-1050)

UNITED STATES PATENT AND TRADEMARK OFFICE
CERTIFICATE OF CORRECTION

PATENT NO. : 11,025,468

APPLICATION NO.: 16/544,348

ISSUE DATE : 6/21/2021

INVENTOR(S) : Steve Shattil

It is certified that an error appears or errors appear in the above-identified patent and that said Letters Patent is hereby corrected as shown below:

Col. 14, line 57-58:

Please amend -- $f(\phi) = \{e^{j\theta 1}, e^{j\theta 2}, \ldots, e^{j\theta N}\} = \{e^{j0}, e^{j2\pi k/N}, \ldots, e^{j(N-1)\cdot 2\pi k/N}\}$ --

to read -- $f(\phi) = \{e^{j\phi 1}, e^{j\phi 2}, \ldots, e^{j\phi N}\} = \{e^{j0}, e^{j2\pi k/N}, \ldots, e^{j(N-1)\cdot 2\pi k/N}\}$ --

Col. 14, line 66:

Please amend -- $\{t_1, t_2, \ldots, t_{N-1}\} = \{1/f_s, 2/f_s, \ldots, (N-1)//f_s\}$. --

to read -- $\{t_1, t_2, \ldots, t_{N-1}\} = \{1/f_s, 2/f_s, \ldots, (N-1)/f_s\}$. --

Col. 15, line 4-5:

Please amend -- $\{t'_1, t'_2, \ldots, t'_{N-1}\} = \{1/f_s, 2/f_s, \ldots, (N-1)//f_s\}$. --

to read -- $\{t'_1, t'_2, \ldots, t'_{N-1}\} = 1/(2Nf_s) + \{1/f_s, 2/f_s, \ldots, (N-1)/f_s\}$. --

MAILING ADDRESS OF SENDER (Please do not use Customer Number below):

Steven J Shattil
PO Box 17355, Boulder, CO 80308

This collection of information is required by 37 CFR 1.322, 1.323, and 1.324. The information is required to obtain or retain a benefit by the public which is to file (and by the USPTO to process) an application. Confidentiality is governed by 35 U.S.C. 122 and 37 CFR 1.14. This collection is estimated to take 1.0 hour to complete, including gathering, preparing, and submitting the completed application form to the USPTO. Time will vary depending upon the individual case. Any comments on the amount of time you require to complete this form and/or suggestions for reducing this burden, should be sent to the Chief Information Officer, U.S. Patent and Trademark Office, U.S. Department of Commerce, P.O. Box 1450, Alexandria, VA 22313-1450. DO NOT SEND FEES OR COMPLETED FORMS TO THIS ADDRESS. **SEND TO: Attention Certificate of Corrections Branch, Commissioner for Patents, P.O. Box 1450, Alexandria, VA 22313-1450.**

If you need assistance in completing the form, call 1-800-PTO-9199 and select option 2.

Privacy Act Statement

The **Privacy Act of 1974 (P.L. 93-579)** requires that you be given certain information in connection with your submission of the attached form related to a patent application or patent. Accordingly, pursuant to the requirements of the Act, please be advised that: (1) the general authority for the collection of this information is 35 U.S.C. 2(b)(2); (2) furnishing of the information solicited is voluntary; and (3) the principal purpose for which the information is used by the U.S. Patent and Trademark Office is to process and/or examine your submission related to a patent application or patent. If you do not furnish the requested information, the U.S. Patent and Trademark Office may not be able to process and/or examine your submission, which may result in termination of proceedings or abandonment of the application or expiration of the patent.

The information provided by you in this form will be subject to the following routine uses:

1. The information on this form will be treated confidentially to the extent allowed under the Freedom of Information Act (5 U.S.C. 552) and the Privacy Act (5 U.S.C 552a). Records from this system of records may be disclosed to the Department of Justice to determine whether disclosure of these records is required by the Freedom of Information Act.
2. A record from this system of records may be disclosed, as a routine use, in the course of presenting evidence to a court, magistrate, or administrative tribunal, including disclosures to opposing counsel in the course of settlement negotiations.
3. A record in this system of records may be disclosed, as a routine use, to a Member of Congress submitting a request involving an individual, to whom the record pertains, when the individual has requested assistance from the Member with respect to the subject matter of the record.
4. A record in this system of records may be disclosed, as a routine use, to a contractor of the Agency having need for the information in order to perform a contract. Recipients of information shall be required to comply with the requirements of the Privacy Act of 1974, as amended, pursuant to 5 U.S.C. 552a(m).
5. A record related to an International Application filed under the Patent Cooperation Treaty in this system of records may be disclosed, as a routine use, to the International Bureau of the World Intellectual Property Organization, pursuant to the Patent Cooperation Treaty.
6. A record in this system of records may be disclosed, as a routine use, to another federal agency for purposes of National Security review (35 U.S.C. 181) and for review pursuant to the Atomic Energy Act (42 U.S.C. 218(c)).
7. A record from this system of records may be disclosed, as a routine use, to the Administrator, General Services, or his/her designee, during an inspection of records conducted by GSA as part of that agency's responsibility to recommend improvements in records management practices and programs, under authority of 44 U.S.C. 2904 and 2906. Such disclosure shall be made in accordance with the GSA regulations governing inspection of records for this purpose, and any other relevant (*i.e.*, GSA or Commerce) directive. Such disclosure shall not be used to make determinations about individuals.
8. A record from this system of records may be disclosed, as a routine use, to the public after either publication of the application pursuant to 35 U.S.C. 122(b) or issuance of a patent pursuant to 35 U.S.C. 151. Further, a record may be disclosed, subject to the limitations of 37 CFR 1.14, as a routine use, to the public if the record was filed in an application which became abandoned or in which the proceedings were terminated and which application is referenced by either a published application, an application open to public inspection or an issued patent.
9. A record from this system of records may be disclosed, as a routine use, to a Federal, State, or local law enforcement agency, if the USPTO becomes aware of a violation or potential violation of law or regulation.

PTO/SB/44 (09-07)
Approved for use through 03/31/2023. OMB 0651-0033
U.S. Patent and Trademark Office; U.S. DEPARTMENT OF COMMERCE
Under the Paperwork Reduction Act of 1995, no persons are required to respond to a collection of information unless it displays a valid OMB control number.
(Also Form PTO-1050)

UNITED STATES PATENT AND TRADEMARK OFFICE
CERTIFICATE OF CORRECTION

PATENT NO. : 11,025,468

APPLICATION NO.: 16/544,348

ISSUE DATE : 6/21/2021

INVENTOR(S) : Steve Shattil

It is certified that an error appears or errors appear in the above-identified patent and that said Letters Patent is hereby corrected as shown below:

Drawings:

Please amend FIG. 7 as indicated in the attached clean and marked-up versions of Drawing Sheet 7.

MAILING ADDRESS OF SENDER (Please do not use Customer Number below):

Steven J Shattil
PO Box 17355, Boulder, CO 80308

This collection of information is required by 37 CFR 1.322, 1.323, and 1.324. The information is required to obtain or retain a benefit by the public which is to file (and by the USPTO to process) an application. Confidentiality is governed by 35 U.S.C. 122 and 37 CFR 1.14. This collection is estimated to take 1.0 hour to complete, including gathering, preparing, and submitting the completed application form to the USPTO. Time will vary depending upon the individual case. Any comments on the amount of time you require to complete this form and/or suggestions for reducing this burden, should be sent to the Chief Information Officer, U.S. Patent and Trademark Office, U.S. Department of Commerce, P.O. Box 1450, Alexandria, VA 22313-1450. DO NOT SEND FEES OR COMPLETED FORMS TO THIS ADDRESS. **SEND TO: Attention Certificate of Corrections Branch, Commissioner for Patents, P.O. Box 1450, Alexandria, VA 22313-1450.**

If you need assistance in completing the form, call 1-800-PTO-9199 and select option 2.

Privacy Act Statement

The **Privacy Act of 1974 (P.L. 93-579)** requires that you be given certain information in connection with your submission of the attached form related to a patent application or patent. Accordingly, pursuant to the requirements of the Act, please be advised that: (1) the general authority for the collection of this information is 35 U.S.C. 2(b)(2); (2) furnishing of the information solicited is voluntary; and (3) the principal purpose for which the information is used by the U.S. Patent and Trademark Office is to process and/or examine your submission related to a patent application or patent. If you do not furnish the requested information, the U.S. Patent and Trademark Office may not be able to process and/or examine your submission, which may result in termination of proceedings or abandonment of the application or expiration of the patent.

The information provided by you in this form will be subject to the following routine uses:

1. The information on this form will be treated confidentially to the extent allowed under the Freedom of Information Act (5 U.S.C. 552) and the Privacy Act (5 U.S.C 552a). Records from this system of records may be disclosed to the Department of Justice to determine whether disclosure of these records is required by the Freedom of Information Act.
2. A record from this system of records may be disclosed, as a routine use, in the course of presenting evidence to a court, magistrate, or administrative tribunal, including disclosures to opposing counsel in the course of settlement negotiations.
3. A record in this system of records may be disclosed, as a routine use, to a Member of Congress submitting a request involving an individual, to whom the record pertains, when the individual has requested assistance from the Member with respect to the subject matter of the record.
4. A record in this system of records may be disclosed, as a routine use, to a contractor of the Agency having need for the information in order to perform a contract. Recipients of information shall be required to comply with the requirements of the Privacy Act of 1974, as amended, pursuant to 5 U.S.C. 552a(m).
5. A record related to an International Application filed under the Patent Cooperation Treaty in this system of records may be disclosed, as a routine use, to the International Bureau of the World Intellectual Property Organization, pursuant to the Patent Cooperation Treaty.
6. A record in this system of records may be disclosed, as a routine use, to another federal agency for purposes of National Security review (35 U.S.C. 181) and for review pursuant to the Atomic Energy Act (42 U.S.C. 218(c)).
7. A record from this system of records may be disclosed, as a routine use, to the Administrator, General Services, or his/her designee, during an inspection of records conducted by GSA as part of that agency's responsibility to recommend improvements in records management practices and programs, under authority of 44 U.S.C. 2904 and 2906. Such disclosure shall be made in accordance with the GSA regulations governing inspection of records for this purpose, and any other relevant (*i.e.*, GSA or Commerce) directive. Such disclosure shall not be used to make determinations about individuals.
8. A record from this system of records may be disclosed, as a routine use, to the public after either publication of the application pursuant to 35 U.S.C. 122(b) or issuance of a patent pursuant to 35 U.S.C. 151. Further, a record may be disclosed, subject to the limitations of 37 CFR 1.14, as a routine use, to the public if the record was filed in an application which became abandoned or in which the proceedings were terminated and which application is referenced by either a published application, an application open to public inspection or an issued patent.
9. A record from this system of records may be disclosed, as a routine use, to a Federal, State, or local law enforcement agency, if the USPTO becomes aware of a violation or potential violation of law or regulation.