High-Performance, High-Capacity MC-CDMA via Carrier Interferometry+

Zhiqiang Wu, Balasubramaniam Natarajan, Carl R.Nassar and Steve Shattil
Department of ECE, Colorado State University
Fort Collins, CO 80523-1373

Abstract-This paper proposes a novel scheme which doubles capacity in MC-CDMA systems without any cost in bandwidth and with negligible cost in performance. Specifically: (1) complex spreading codes are used instead of conventional real value spreading codes, and (2) two groups of orthogonal complex spreading codes are used simultaneously, where minimum cross-correlation exists between the two groups. Simulations performed over Rayleigh fading channels using these novel codes demonstrate that the proposed scheme enables gains 100% in term of MC-CDMA capacity with negligible performance losses.

I. INTRODUCTION

Multi-carrier code division multiple access (MC-CDMA) [1] has emerged as a powerful alternative to conventional direct sequence CDMA (DS-CDMA) [2]. In MC-CDMA, each user's data bit is transmitted simultaneously over N narrowband subcarriers, with each subcarrier encoded with a -1 or $+1$ (selected from a predetermined spreading code). Multiple users are assigned orthogonal or pseudo-orthogonal codes to guarantee their separatablity at the receiver . It has been shown that MC-CDMA achieves significant performance benefits over DS-CDMA because it exploits frequency diversity instead of the usual path diversity, enabling a better combining of received signal energy. [1]

In MC-CDMA, given N carriers, N orthogonal users can be supported via Hadamard-Walsh codes. If more than N users are to be supported, pseudo-orthogonal codes must be employed during system design. When doing this, (1) the performance of system is notably degraded even when less than N users are present; and (2) because of cross-correlation between pseudo-orthogonal codes, when the number of users exceeds N, the total multi-user interference is very high, causing dramatic degradation in performance.

In our earlier work [3][4], we overcame the limitations of MC-CDMA by introducing Carrier Interferometry (CI) codes. Here, the usual $+1$ or -1 spreading codes are replaced by complex spreading codes. Specifically, user k's code corresponds to the linearly increasing phase offsets $\{e^{j0}, e^{j\theta_k}, \ldots, e^{j(N-1)\theta_k}\}$. In the time domain, this transmitted signal (prior to phase coding to reduce PAPR) corresponds to a carrier interferometry pattern, i.e., a periodic mainlobe (the first at time $\Delta t_k = \frac{\theta_k}{2\pi\Delta f}$) with sidelobe activity occurring at inbetween times. By careful selection of θ_k to create each user's spreading code, we demonstrated that, given N carriers, CI/MC-CDMA supports N orthogonal users, and, if capacity is to be increased further, an additional N pseudo-orthogonal users can be added. While our research demonstrated that CI/MC-CDMA (1) offers orthogonal performance below N users and (2) easily outperforms MC-CDMA for more than N users, performance still degrades severely as the number of users increases beyond N. [4]

In this work, we introduce an MC-CDMA system employing spreading codes corresponding to two groups of orthogonal carrier interfometry (CI) complex spreading codes. These codes are carefully selected to ensure minimum cross-correlation between the two groups. When the number of users in the system is less than N, one orthogonal group of spreading codes is used. When the number of users in the system exceeds N, the second orthogonal group of spreading codes is introduced. Performance of the system degrades negligibly from N to $2N$ users, indicating that these two sets of orthogonal codes a particularly well suited for use in high capacity MC-CDMA.

Section II briefly reviews CI/MC-CDMA and introduces the novel spreading codes used in this work. Section III presents system modeling and simulation results over Rayleigh fading channels, and an analysis and conclusion follow.

II. NOVEL SPREADING CODES FOR CI/MC-CDMA

In CI/MC-CDMA, user k's transmitted signal corresponds to that of traditional MC-CDMA with a novel spreading code. Specifically,

$$s_k(t) = b_k c_k(t) g(t) \qquad (1)$$

where $b_k \in \{-1, +1\}$ refers to user k's bit, $c_k(t)$ refers to user k's spreading code, and $g(t)$ is a rectangular pulse of height 1 for the bit duration. Now, in CI/MC-CDMA, as in traditional MC-CDMA, the spreading code corresponds to

+ Research supported by NSF grant ECS 9988665 "Ultra-Wideband Wireless Communication from Emerging Multiple Access Technology"

0-7803-7244-1/01/$10.00 ©2001 IEEE

GC0047709

Samsung Exhibit 1126, Page 1 of 6
Samsung Electronics Co., Ltd. et al. v. Genghiscomm Holdings LLC
IPR2025-00899

$$c_k(t) = \sum_{i=0}^{N-1} \cos(\ 2\pi f_c t + 2\pi i \Delta f t + \beta_i^{(k)}) \qquad (2)$$

where $\Delta f = \frac{1}{T_s}$ to ensure orthogonality between subcarriers. In MC-CDMA, $\beta_i^{(k)} = 0$ or π, whereas in CI/MC-CDMA, $\beta_i^{(k)} = i\theta_k$. That is, in MC-CDMA, the spreading code can be treated as a sequence made up of $+1$ or -1 applied to each carrier, whereas in CI/MC-CDMA, the spreading code applied to the N carriers corresponds to the phase offsets $\{e^{j0}, e^{j\theta_k}, \ldots, e^{j(N-1)\theta_k}\}$.

The envelope of the CI/MC-CDMA code, $c_k(t)$, in the time domain, corresponds to

$$E_k(t) = \left| \frac{\sin(\frac{1}{2} N 2\pi\Delta f t + \frac{N}{2}\theta_k)}{\sin(\frac{1}{2} 2\pi\Delta f t + \frac{1}{2}\theta_k)} \right| \qquad (3)$$

Figure 1 shows the envelope of user k' code in a CI/MC-CDMA system with $N=16$ carriers. The envelope of the code $c_k(t)$ is periodic with period $T_s = \frac{1}{\Delta f}$; demonstrates one mainlobe per period with a peak at time $\Delta t_k = \frac{\theta_k}{2\pi\Delta f}$ and a duration of $\frac{2}{N\Delta f}$; and the N-1 sidelobes per period each have duration $\frac{1}{N\Delta f}$.

A careful selection of θ_k for user k's code $c_k(t)$ and θ_j for user j's code $c_j(t)$ leads to orthogonality in time between users' codes. Specifically, for a given θ_k and θ_j, the codes' correlation corresponds to

$$R\ (\tau) = \frac{1}{2\Delta f} \sum_{i=0}^{N-1} \cos(\ i(2\pi\Delta f \tau)) \qquad (4)$$

$$R\ (\tau) = \frac{1}{2\Delta f} \cdot \cos(\ 2\pi\Delta f \tau) \cdot \frac{\sin(\frac{N}{2} 2\pi\Delta f \tau)}{\sin(\frac{1}{2} 2\pi\Delta f \tau)} \cdot \cos(\ \frac{(N-1)}{2} 2\pi\Delta f \tau) \qquad (5)$$

where $\tau = \frac{\theta_k - \theta_j}{2\pi\Delta f}$.

There exists N-1 equally spaced zeros at $\tau = \frac{k}{N\Delta f}, k = 1, 2, \ldots, N-1$. These N-1 zeros indicate that a CI/MC-CDMA system can simultaneously support N orthogonal users by selecting

$$\theta_k = \frac{2\pi}{N} k,\ k = 0, 1, \ldots,\ N-1 \qquad (6)$$

With all N orthogonal users on the system, the total transmitted signal considering all users is

$$s(t) = \sum_{k=0}^{N-1} s_k(t) = \sum_{k=0}^{N-1} b_k c_k(t) g(t)$$

$$= \sum_{k=0}^{N-1} b_k \sum_{i=0}^{N-1} \cos(\ 2\pi f_c t + 2\pi i \Delta f t + i\theta_k)\, g(t) \qquad (7)$$

where $\theta_k = \frac{2\pi}{N} k, k = 0, 1, \ldots, N-1$.

Now, if we introduce a fixed phase offset to all users' phases, i.e., replace θ_k by $\theta_k + \Delta\theta$ for all k values, all users remain orthogonal. That is, the cross correlation between the spreading codes remains zero, as is evident from (5), where τ depends only on the difference $\theta_k - \theta_j = (\theta_k + \Delta\theta) - (\theta_j + \Delta\theta)$.

Hence, there exist N orthogonal spreading codes for any selection of $\Delta\theta \in [0, 2\pi]$. These are $\{e^{j0}, e^{j\theta_k}, \ldots, e^{j(N-1)\theta_k}\}$, where $\theta_k = \frac{2\pi}{N} k + \Delta\theta,\ k = 0, 1, \ldots, N-1$. Of course, between one orthogonal set of N codes (constructed with $\Delta\theta = 0$) and another orthogonal set of N codes (constructed with $\Delta\theta = \Delta\theta'$) there exists a non-zero cross correlation.

We now determine the two sets of N orthogonal codes with a minimal cross-correlation between the sets. Let $R_{1,2}(j,k)$ refer to the cross correlation between the jth user in orthogonal code group 1 (constructed with $\Delta\theta = 0$) and the kth user in orthogonal code group 2 (constructed with $\Delta\theta = \Delta\theta'$). Also, let

$$R_{1,2} = [\frac{1}{N^2} \sum_{j=0}^{N-1} \sum_{k=0}^{N-1} (R_{1,2}(j,k))^2]^{\frac{1}{2}} \qquad (8)$$

represent the root mean square cross correlation that exists between users in group 1 and group 2. We seek to find the two set of codes (i.e., the $\Delta\theta'$) that minimize $R_{1,2}$. Now, it is easily shown that

$$R_{1,2}(j,k) = \frac{1}{2\Delta f} \sum_{i=0}^{N-1} \cos[\ i((\theta_j - (\theta_k + \Delta\theta'))]$$

$$= \frac{1}{2\Delta f} \sum_{i=0}^{N-1} \cos[\ i(\frac{2\pi}{N} j - \frac{2\pi}{N} k - \Delta\theta')] \qquad (9)$$

It is also easy to show that

GC0047710

Samsung Exhibit 1126, Page 2 of 6
Samsung Electronics Co., Ltd. et al. v. Genghiscomm Holdings LLC
IPR2025-00899

$$\sum_{j=0}^{N-1}(R_{1,2}(j,k))^2 = \sum_{j=0}^{N-1}(R_{1,2}(j,k'))^2 \qquad k \neq k' \qquad (10)$$

That is, the total cross-correlation between the kth user in orthogonal group 2 and all users in group 1 is identical to the cross-correlation between the kth user in orthogonal group 2 and all users in group 1. Using equation (10), we can rewrite equation (8) as

$$R_{1,2} = \{\frac{1}{N}\sum_{j=0}^{N-1}(R_{1,2}(j,0))^2\}^{\frac{1}{2}} \qquad (11)$$

and, using equation (9), this becomes

$$R_{1,2} = \{\frac{1}{N}\sum_{j=0}^{N-1}[\frac{1}{2\Delta f}\sum_{i=0}^{N-1}\cos[i(\frac{2\pi}{N}j - \Delta\theta')]]^2\}^{\frac{1}{2}} \qquad (12)$$

Let us now determine the selection of $\Delta\theta'$ for group 2 that minimizes the root mean square correlation between the two orthogonal groups. To do this, we select

$$\frac{\partial R_{1,2}}{\partial \Delta\theta'} = 0 \qquad (13)$$

Now,

$$\frac{\partial R_{1,2}}{\partial \Delta\theta'} = \frac{1}{2}\{\frac{1}{N}\sum_{j=0}^{N-1}(R_{1,2}(j,0))^2\}^{-\frac{1}{2}}\frac{1}{N}\frac{\partial[\sum_{j=0}^{N-1}(R_{1,2}(j,0))^2]}{\partial\Delta\theta'}$$

$$= \frac{1}{2}\{\frac{1}{N}\sum_{j=0}^{N-1}(R_{1,2}(j,0))^2\}^{-\frac{1}{2}}\frac{1}{N}\cdot I \qquad (14)$$

where

$$I = \frac{\partial[\sum_{j=0}^{N-1}(R_{1,2}(j,0))^2]}{\partial\Delta\theta'}$$

$$= \frac{\partial[\sum_{j=0}^{N-1}(\sum_{i=0}^{N-1}\cos[i(\frac{2\pi}{N}j - \Delta\theta')])^2]}{\partial\Delta\theta'} \qquad (15)$$

Now,

$$I = \sum_{j=0}^{N-1}2\left[\sum_{i=0}^{N-1}\cos[i(\frac{2\pi}{N}j - \Delta\theta')]\right]\cdot\left[\sum_{k=0}^{N-1}k\sin[k(\frac{2\pi}{N}j - \Delta\theta')]\right]$$

$$= \sum_{j=0}^{N-1}\sum_{i=0}^{N-1}\sum_{k=0}^{N-1}2k\cos[(\frac{2\pi}{N}j - \Delta\theta')]\sin[k(\frac{2\pi}{N}j - \Delta\theta')]$$

$$= \sum_{j=0}^{N-1}\sum_{i=0}^{N-1}\sum_{k=0}^{N-1}k\left\{\sin[(k+i)(\frac{2\pi}{N}j - \Delta\theta')] + \sin[(k-i)(\frac{2\pi}{N}j - \Delta\theta')]\right\}$$

$$= \mathrm{Im}(\sum_{j=0}^{N-1}\sum_{i=0}^{N-1}\sum_{k=0}^{N-1}k(e^{j(k+i)(\frac{2\pi}{N}j-\Delta\theta')} + e^{j(k-i)(\frac{2\pi}{N}j-\Delta\theta')}))$$

$$= \mathrm{Im}(\sum_{i=0}^{N-1}\sum_{k=0}^{N-1}ke^{-j(k+i)\Delta\theta'}\sum_{j=0}^{N-1}e^{j\frac{2\pi}{N}j(k+i)} + \sum_{i=0}^{N-1}\sum_{k=0}^{N-1}ke^{-j(k-i)\Delta\theta'}\sum_{j=0}^{N-1}e^{j\frac{2\pi}{N}j(k-i)})$$

$$= \mathrm{Im}(\sum_{i=0}^{N-1}\sum_{k=0}^{N-1}ke^{-j(k+i)\Delta\theta'}\delta(k+i-N)N + \sum_{i=0}^{N-1}\sum_{k=0}^{N-1}ke^{-j(k-i)\Delta\theta'}\delta(k-i)N)$$

$$= \mathrm{Im}(\sum_{i=0}^{N-1}(N-i)e^{-jN\Delta\theta} + \sum_{i=0}^{N-1}iN \qquad (16)$$

Hence, when $\Delta\theta' = \frac{k\pi}{N}, k = 0,1,2\ldots$, we have $I = 0$ and, therefore, from equation (14), $\frac{\partial R_{1,2}}{\partial\Delta\theta'} = 0$.

Seeking to determine which $\Delta\theta'$ are maxima and which are minima, we calculate the second order partial derivative at $\Delta\theta' = \frac{k\pi}{N}$ and determine:

$$\frac{\partial R^2}{\partial^2\Delta\theta'} > 0 \quad \text{when} \quad \Delta\theta' = \frac{(2k+1)\pi}{N}$$

$$\frac{\partial R^2}{\partial^2\Delta\theta'} < 0 \quad \text{when} \quad \Delta\theta' = \frac{2k\pi}{N} \qquad (17)$$

Hence, $\Delta\theta' = \frac{2k\pi}{N}$ corresponds to maxima and $\Delta\theta' = \frac{(2k+1)\pi}{N}$ provides minima. Selecting $k=0$, we choose $\Delta\theta' = \frac{\pi}{N}$ as our minima. Figure 2 plots the root mean square cross correlation $R_{1,2}$ between the two groups of codes as a function of $\Delta\theta'$, verifying our selection of $\Delta\theta'$.

Hence, if we have one set of N orthogonal users using CI codes, and we want to increase system capacity to $2N$ users, we

GC0047711

Samsung Exhibit 1126, Page 3 of 6
Samsung Electronics Co., Ltd. et al. v. Genghiscomm Holdings LLC
IPR2025-00899

can introduce a second set of N orthogonal users also using CI codes. To best do that, in a minimum interference sense, introduce a second set of CI with codes phase offset by $\Delta\theta'=\frac{\pi}{N}$ with respect to the first set of CI codes. That is, for $2N$ users on the system, numbered 0 to $2N-1$, each user should be assigned the spreading code $\{e^{j\theta_k}, e^{j3\theta_k}, \ldots, e^{j(N-1)\theta_k}\}$ where

$$\theta_k = k\frac{2\pi}{N} \qquad k = 0,1,\ldots,N-1$$

$$\theta_k = (k-N)\frac{2\pi}{N}+\frac{\pi}{N} \qquad k = N, N+1,\ldots,2N-1 \qquad (18)$$

The total transmitted signal, with a full $2N$ users , is then

$$s(t) = \sum_{k=0}^{2N-1} b_k \sum_{i=0}^{N-1} \cos(2\pi f_c t + 2\pi i\Delta f t + i\theta_k)g(t) \qquad (19)$$

where θ_k is selected as shown in (18).

III. SYSTEM MODEL AND PERFORMANCE RESULTS

Figure 3(a) shows the usual MC-CDMA transmitter for user k with the spreading code updated to correspond to CI/MC-CDMA. Figure 3(b) shows the corresponding CI/MC-CDMA receiver structure.

At the receiver side, the received signal is characterized by (as is typical of MC-CDMA)

$$r(t) = \sum_{k=0}^{K-1} b_k \sum_{i=0}^{N-1} \alpha_i \cos(2\pi f_c t + 2\pi i\Delta f t + i\theta_k + \phi_i)g(t) + \eta(t) \qquad (20)$$

where K is the number of users occupying the system and corresponds to a value between 1 and $2N$, α_i is the gain of the ith subcarrier and ϕ_i the phase offset of the ith subcarrier due to the channel, and $\eta(t)$ represents AWGN. To simplify the analysis, downlink communication and exact phase synchronization is assumed.

As is typical in MC-CDMA, the received signal is first projected onto the orthonormal basis of the transmitted signal and then despread, outputting $\vec{r} = (r_0, r_1, \ldots, r_{N-1})$ where

$$r_i = \alpha_i b_k + \sum_{\substack{j=0 \\ j\neq k}}^{K-1} \alpha_i b_j \cos[i(\theta_j - \theta_k)] + \eta_i \qquad (21)$$

Here, index i represents the carrier number, and η_i is a Gaussian random variable with mean 0 and variance $\frac{N_0}{2}$. Minimized mean square error combining is employed to combine the r_i's, as this has been shown to demonstrate the best performance, that is,

$$R_k = \sum_{i=0}^{N-1} \left[\frac{\alpha_i}{\alpha_i^2 KP_n + \frac{N_0}{2}}\right] \cdot r_i \qquad (22)$$

where $P_n = \begin{cases} \frac{1}{2}, & n \neq 0, \frac{N}{2} \\ 1, & n = 0, \frac{N}{2} \end{cases}$.

A hard decision device is then employed to create a final decision, $\hat{b}_k$.

The multipath fading channel models used to assess the performance of the double capacity CI/MC-CDMA system are the Hilly Terrain (HT) channel and Typical Urban (TU) channel taken from the COST-207 GSM standard [5]. This channel model is defined as a transversal filter with time varying coefficients whose average power is determined by the multipath power delay profile (PDP) given in [5]. In a CI/MC-CDMA system, the channel must be characterized in the frequency domain by $(\Delta f)_c$, the coherence bandwidth (defined here as the bandwidth over which the frequency correlation function is above 0.5). This can be computed from a multipath power delay profile by using the approximate relationship in [6]. This leads to the following coherence bandwidth result: for HT, $(\Delta f)_c$ = 39.72 kHz; for TU, $(\Delta f)_c$ = 178 kHz. This $(\Delta f)_c$ value satisfies

$$\Delta f << (\Delta f)_c < \textit{total bandwidth} \qquad (23)$$

for the usual GSM bandwidth and N=32 MC-CDMA carriers within that bandwidth. This indicates that the channels are frequency selective over the entire bandwidth, but not over each carrier [7]. Specifically, each carrier undergoes a flat fade, with the correlation between the ith subcarrier fade and the jth subcarrier fade characterized by [8]

$$\rho_{i,j} = \frac{1}{1+((f_i - f_j)/(\Delta f)_c)^2} \qquad (24)$$

where $(f_i - f_j)$ indicates the frequency separation between the ith and the jth subcarriers. Generation of fades with correlation has been discussed in [9].

Simulations are performed assuming that a total of $N=32$ carriers. Benchmark results are generated using the following systems: (1) a traditional MC-CDMA system receiver using

GC0047712

Samsung Exhibit 1126, Page 4 of 6
Samsung Electronics Co., Ltd. et al. v. Genghiscomm Holdings LLC
IPR2025-00899

N=32 Hadamard-Walsh codes and (2) traditional MC-CDMA using pseudo-orthogonal codes where the first *33* users use one set of Gold codes and next *32* users use a second set of Gold codes (for a total capacity of K=65 users). We assume a synchronous downlink channel.

Figure 4 presents bit error probability (BER) versus the number of users for SNR=10dB in the HT channel and Figure 5 presents these results in the TU channel at SNR=15dB. The curve marked with asterisks represents the performance of traditional MC-CDMA with Hadamard-Walsh codes, while the curves marked with circles represents the performance of CI/MC-CDMA, and the curves marked with dots represents the performance of traditional MC-CDMA with Gold codes (supporting up to *65* users). In CI/MC-CDMA, the first *32* users are supported using the first orthogonal group of spreading codes, and the next *32* users are supported using the second orthogonal group of spreading codes.

These curves demonstrate that the use of this novel scheme to increase capacity offers tremendous performance benefits over the use of traditional MC-CDMA system with pseudo-orthogonal codes for increased capacity. *Without any loss of performance*, capacity increases of 50% can be supported (Figure 4, Figure 5), and there are *negligible* performance losses even when capacity increases by 100%.

IV. CONCLUSIONS

In this work a novel method that involves carrier interferometry spreading codes is investigated and is shown to increase capacity in MC-CDMA systems. By introducing two groups of orthogonal complex spreading codes with minimum cross correlation between groups, we demonstrate increases in system capacity by 100% with no extra expense in bandwidth. Increases in capacity are achieved with only negligible performance loss relative to traditional MC-CDMA, and, moreover, *without any loss of performance*, capacity increases of 50% are supported.

REFERENCES

[1] S. Hara and R. Prasad, "Overview of Multicarrier CDMA", *IEEE Communications Magazine*, Dec. 1997, pp126-131

[2] A.J. Viterbi, *CDMA: Principles of Spread Spectrum Communication*, Addison-WeSley Publishing Company, 1995

[3] C.R.Nassar, B.Natarajan and S.Shattil,``Introduction of carrier interference to spread spectrum multiple access," *1999 IEEE Emerging Technologies Symposium Proceedings*, Section II, Richardson, TX, April 1999.

[4] B.Natarajan, C.R.Nassar, Z.Wu, S.Shattil, "Application of Carrier Interferometry to MC-CDMA," accepted by *IEEE Transactions on Vehicular Technology*.

[5] COST-207: "Digital land mobile radio communications", Final report of the COST-Project 207, Commission of the European Community, Brussels, 1989

[6] T.S. Rappaport, *Wireless Communications-Principles and Practice*. New Jersey: Prentice Hall, 1996

[7] J. Proakis, *Digital Communications*. New York: McGraw-Hill, 1995

[8] W. Xu and L.B. Milstein, "Performance of Multicarrier DS CDMA Systems in the presence of correlated fading", *IEEE 47th Vehicular Technology Conference*, Phoenix, AZ, May 4-7, 1997, pp. 2050-4

[9] B. Natarajan, C.R. Nassar and V. Chandrasekhar, "Generation of Correlated Rayleigh Fading envelops for spread spectrum applications", *IEEE Communication Letters*, Vol. 4. No.1. Jan, 2000, pp9-11

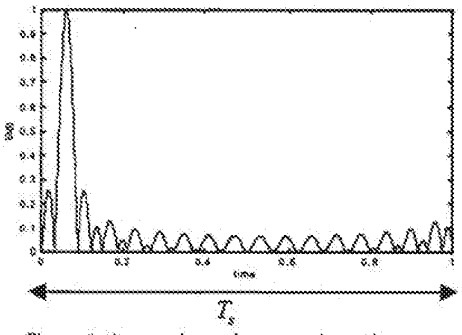

Figure 1: the envelope of one user' s code

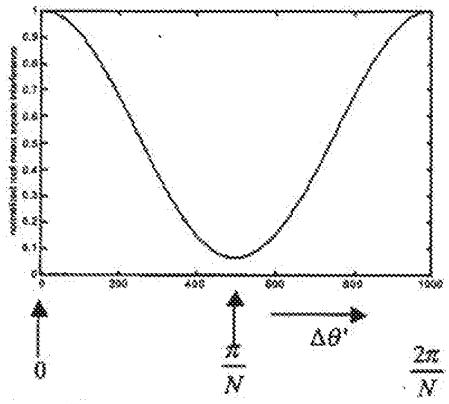

Figure 2: Root Mean Square Cross Correlation versus $\Delta\theta'$

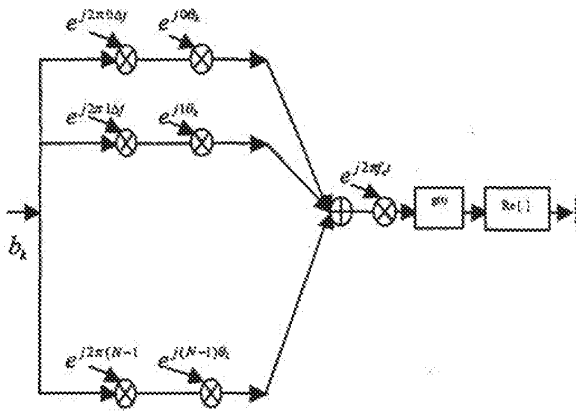

(a) transmitter for user k

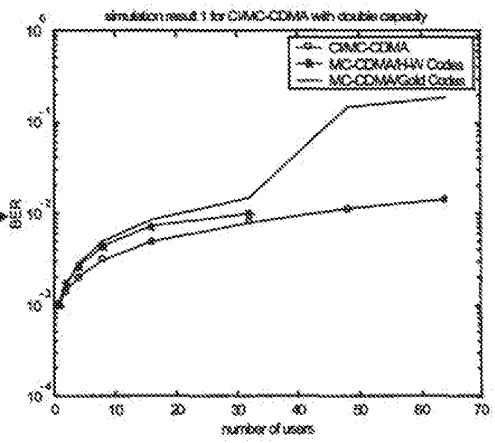

Figure 4: Simulation result 1, HT channel, SNR=10dB

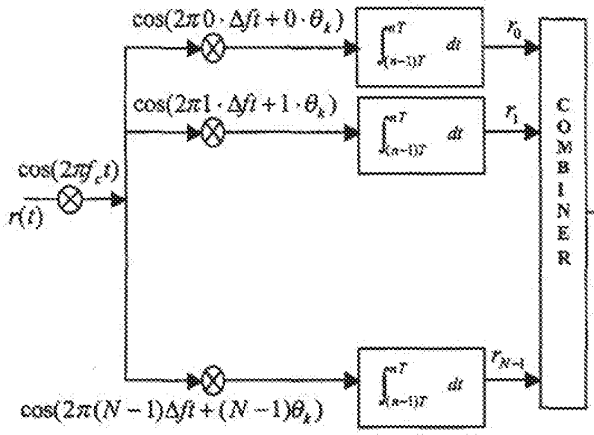

(b) receiver for user k

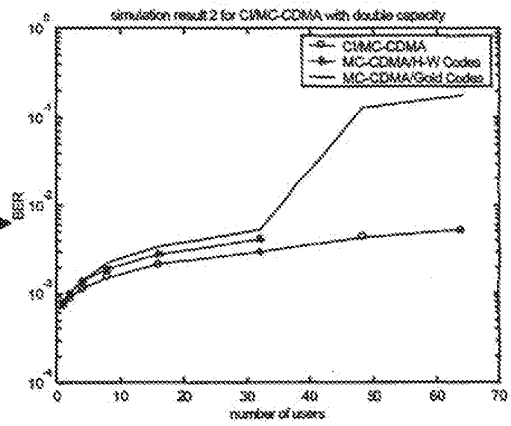

Figure 5: Simulation result 2, TU channel, SNR=15dB

Figure 3: transmitter and receiver structure

GC0047714

Samsung Exhibit 1126, Page 6 of 6
Samsung Electronics Co., Ltd. et al. v. Genghiscomm Holdings LLC
IPR2025-00899