**IN THE UNITED STATES DISTRICT COURT**
**FOR THE WESTERN DISTRICT OF TEXAS**
**WACO DIVISION**

| | | |
|---|---|---|
| **PARKERVISION, INC.,** *Plaintiff*, | § | |
| | § | **6:22-CV-01163-ADA** |
| **-v-** | § | |
| **MEDIATEK INC., MEDIATEK USA, INC.,** *Defendants*. | § | |

**CLAIM CONSTRUCTION ORDER AND MEMORANDUM IN SUPPORT THEREOF**

Before the Court are the Parties' claim construction briefs: Defendants MediaTek Inc. and MediaTek USA, Inc.'s Opening and Reply[1] briefs (ECF Nos. 45 and 53, respectively) and Plaintiff ParkerVision, Inc.'s Response and Sur-Reply briefs (ECF Nos. 50 and 58, respectively). The Court provided preliminary constructions for the disputed terms nine days before the hearing. The Court held the *Markman* hearing on January 26, 2024. ECF No. 63. During that hearing, the Court informed the Parties of the final constructions for the disputed terms. *Id.* This Order does not alter any of those constructions.

## I. DESCRIPTION OF THE ASSERTED PATENTS

Plaintiff asserts U.S. Patent Nos. 6,049,706, 6,266,518, 7,292,835, and 8,660,513. This Court previously construed terms from these patents. *ParkerVision, Inc. v. LG Elecs.*, No. 6-21-cv-00520, ECF No. 55 (W.D. Tex. June 21, 2022). The Court incorporates the Description of the Asserted Patents from that order, which is reproduced below.

[1] Defendants also filed a Notice of Supplementary Authority Regarding Reply Claim Construction Brief. ECF No. 57.

The Asserted Patents describe and claim systems for down-conversion of a modulated carrier signal. ’835 Patent at Abstract. Down conversion is the process of recovering the baseband (audio) signal from the carrier signal after it has been transmitted to and received by the receiver. This process is referred to as “down-conversion” because a high frequency signal is being down-converted to a low frequency signal.

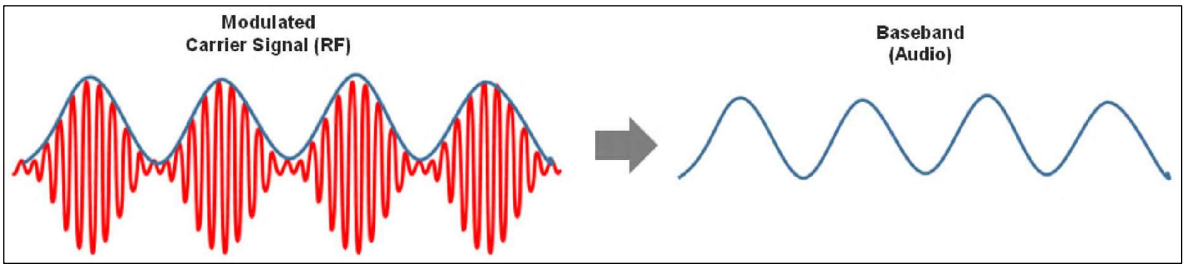


The Asserted Patents disclose at least two types of systems for down-conversion: (1) sample-and-hold (*i.e.*, voltage sampling) and (2) “energy transfer” (also known as “energy sampling”). The key difference between the two is that the former takes a small “sample” of the input signal while the latter takes a very large sample, *i.e.*, a large enough sample that a non-negligible amount of energy is transferred from the input signal. The following sub-sections describes each type of system, their respective operation, and compares them.

### A. Circuit configuration of down-sampling systems: sample-and-hold and energy transfer.

Figure 78B depicts an exemplary sample-and-hold system while Figure 82B depicts an exemplary energy transfer system. ’518 Patent at 63:19–26 (sample-and-hold) and 7:63–64 (energy transfer).

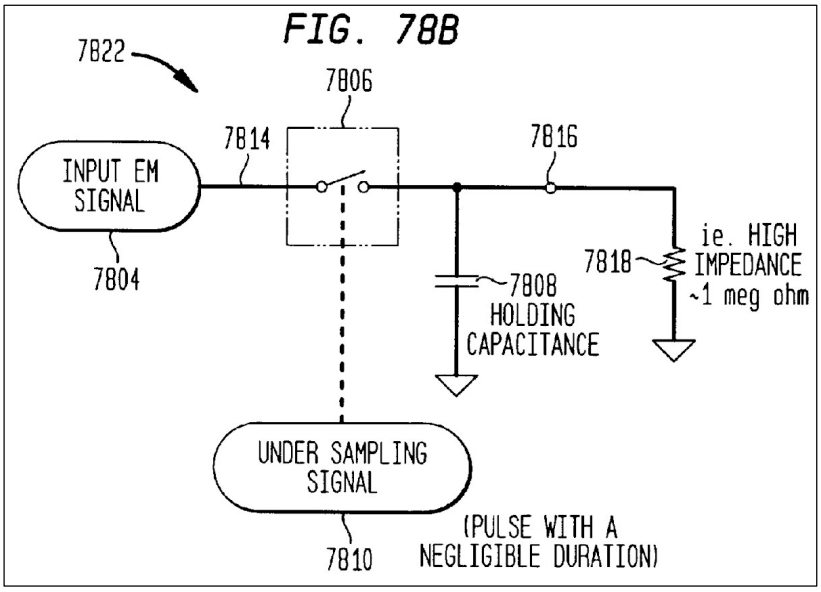


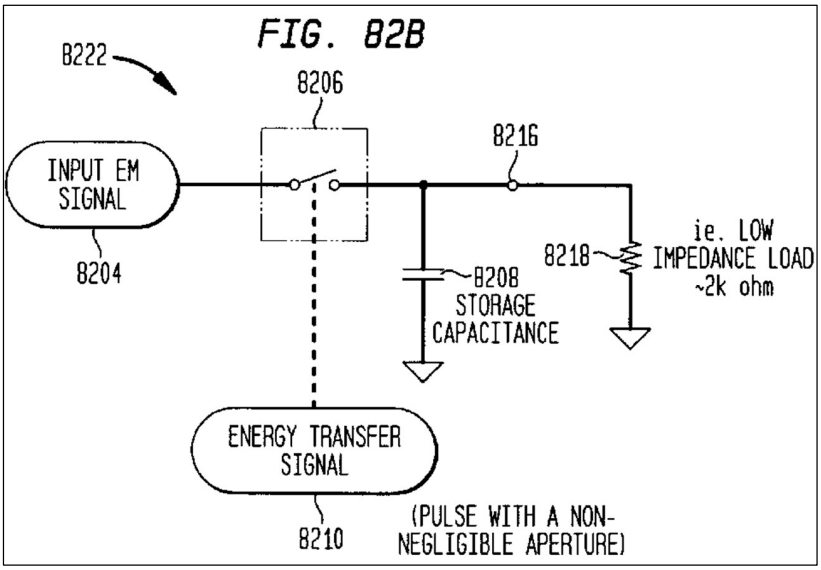


While Figs. 78B and 82B depict that the respective circuits have similar structure, their respective parameter values (*e.g.*, capacitor and load impedance values)—and concomitantly their respectively operation—are very different. It is important to note that the input signal, input EM signal, is the same in both figures.

The circuits in both figures include a switching module (7806 in Fig. 78B and 8206 in Fig. 82B). *Id.* at 62:65–66 (switching module 7806), 66:13–14 (switching module 8206). The switching module opens and closes (*i.e.*, turns off and on, respectively) based on under sampling

signal 7810 in Fig. 78B and energy transfer signal 8210 in Fig. 82B. *Id.* at 62:67–63:1 (under sampling signal 7810), 66:24–26 (energy transfer signal 8210). When the switching module is "closed," input EM signal 7804 and input EM signal 8204 can propagate across the switching module to holding capacitance 7808 and storage capacitance 8208, respectively, but when the switching module is "open," input EM signals 7804/8204 cannot propagate across the switching module. While both switching module 7806 and switching module 8206 open and close, the duration that each module is closed differs significantly. The specifications of the Asserted Patents describe that under sampling signal 7810 "includes a train of pulses having negligible apertures that tend towards zero time in duration." *Id.* at 63:1–3. The specification discloses an embodiment of the "negligible pulse width" as being "in the range of 1–10 p[ico]sec[onds] for under-sampling signal a 900 MHz signal." *Id.* at 63:3–5. By contrast, the specifications describe that energy transfer signal 8210 "includes a train of energy transfer pulses having <u>non-negligible</u> pulse widths that tend away from zero time in duration." *Id.* at 66:26–28 (emphasis added). The specification discloses an embodiment where the "non-negligible pulse" is approximately 550 picoseconds for a 900 MHz signal.

The specifications describe that holding capacitance 7808 and storage capacitance 8208 are capacitors that charge when switching module 7804 and switching module 8204, respectively, are closed. *Id.* at 63:10–13 (holding capacitance 7808), 66:38–42 (storage capacitance 8208). The specifications disclose that holding capacitance 7808 "preferably has a small capacitance value" and disclose an embodiment wherein holding capacitance 7808 has a value of 1 picoFarad ("pF"). *Id.* at 63:9–15. By contrast, the specifications disclose that storage capacitance 8208 "preferably has the capacity to handle the power being transferred" and disclose an embodiment wherein storage capacitance 8208 has a value "in the range of 18 pF." *Id.* at 66:38–49.

The specifications describe that holding capacitance 7808 and storage capacitance 8208 discharge through load 7812 and load 8212 when switching module 7804 and switching module 8204, respectively, are open. *See id.* at 63:19–26 (load 7812), 66:61–65 (load 8212). Fig. 78B depicts that "high impedance" load 7812 has an impedance of approximately 1 MΩ while Fig. 82B depicts that "low impedance" load 8212 has an impedance of approximately 2 KΩ. The specifications describe that "[a] high impedance load is one that is relatively insignificant to an output drive impedance of the system for a given output frequency. A low impedance load is one that is relatively significant." *Id.* at 66:58–61.

**B. Operation of down-converting systems**

At a very high level, both systems operate similarly. In particular, when the switching module (switching modules 7806 / 8206) is closed, the input signal (input EM signal 7804 / 8204) propagates to the capacitor (holding capacitance 7808 and storage capacitance 8208) and charge the voltage across the capacitor to the voltage of input signal. But when the switching module is open, the input signal cannot propagate to the capacitor, *i.e.*, cannot charge the voltage across the capacitor to the voltage of input signal. Rather, the charge on the capacitor discharges through the load impedance (load 7812 / 8212).

While both systems operate similarly at a high level, differences in (1) the width of the sampling aperture, (2) value of the capacitor, and (3) value of the load are what dictates whether the system operates as a sample-and-hold system or an energy transfer system.

**1. Operation of sample-and-hold system**

In a sample-and-hold system, the sampling aperture in under sampling signal 7810 is negligible which means only a small amount of charge from input EM signal 7804 propagates to the holding capacitance 7808 before switching module 7806 opens. *Id.* at 62:63–63:8. Because the sampling aperture has a negligible (*i.e.*, very small) width, there is only enough time take a

"sample" of input EM signal 7804, *i.e.*, only a small amount of charge is transferred to holding capacitor 7808. Given that only a small amount of charge is transferred to the capacitor, the value of holding capacitor 7808 needs to be relatively low in order for the voltage across holding capacitance 7808 change to the voltage of input EM signal 7804. More specifically, the relationship between charge (Q) and voltage (V) across a capacitor (with a capacitance of C) is Q = C * V, or Q / C = V. As such, if the capacitance C is large, more charge Q is needed to order to increase the voltage to V. For example, for the same amount of charge, if the capacitance is 2C in one case and C in other case, the voltage in the former case will be half the voltage of the voltage in the latter case. *Id.* at 65:29–35. Therefore, to ensure that the value of holding capacitance 7808 does not limit the voltage across the capacitor, the value of holding capacitance 7808 needs to be, as described above, low. *Id.* at 63:9–15.

When sampling module 7806 is open, the charge on holding capacitance 7808 discharges through load impedance 7812. *See id.* at 63:19–26. When value of load impedance 7812 is high, the charge on holding capacitance 7808 discharges very slowly as compared to when the load impedance is low. More specifically, the time to discharge a capacitor is related to R * C (also known as the time constant τ) where R is the value of the load impedance. Using the exemplary values depicted in Figs. 78B (1 MΩ) and 82B (2 KΩ), assuming that the capacitance is the same, it will take 500 times longer to discharge the capacitor with the 1 MΩ load impedance as compared to the circuit with the 2 KΩ load impedance. Because it takes significantly longer to discharge the capacitor using with a 1 MΩ load impedance (as compared to the 2 KΩ load impedance), the 1 MΩ load impedance in "holds" the charge.

To summarize, in a <u>sample-and-hold</u> down-sampling system, a negligible sampling aperture for switching module 7806 and a small value for holding capacitance 7808 only allows

for a "sample" of the voltage of the input EM signal 7804 when switching module 7806 is closed. And because of the high value of load impedance 7812, the capacitor "holds" that value when switching module 7806 is open.

**2. Operation of energy transfer system**

As described above, in an energy transfer system, the sampling aperture is non-negligible (*e.g.*, 550 picoseconds versus 1 picosecond for the sample-and-hold system for a 900 MHz input signal). Therefore, there is significantly more time to transfer charge from the input signal to storage capacitance. *Id.* at 66:42–44. Because significantly more charge is transferred to the capacitor, the value of storage capacitance 8208 can be larger, in spite of the fact that charge and voltage are inversely related (*i.e.*, V = Q / C). The fact that this system transfers a large amount of charge—or energy—to the capacitor gives rise to the name "energy transfer" system.

When sampling module 8206 is open, the charge on holding capacitance 8208 discharges through load impedance 8212. *See id.* at 66:61–65. Because the load impedance in an energy transfer system is "low," *e.g.*, 2 KΩ, the charge on storage capacitance 8208 discharges much faster than the charge on a capacitor in a sample-and-hold system, *e.g.*, 500 times faster as compared to using a 1 MΩ load impedance.

To summarize, in an energy transfer down-sampling system, a non-negligible sampling aperture for switching module 8206 and a high value for holding capacitance 8208 allows for a large amount of charge—or energy—to be transferred from the input signal.

**C. Comparison of sample-and-hold and energy transfer systems**

The following summarizes the key difference between sample-and-hold and energy transfer systems.

| Parameter | Sample-and-hold | Energy transfer |
|---|---|---|
| **Sampling aperture** | Negligible (*e.g.*, 1–10 picoseconds) | Non-negligible (*e.g.*, 550 picoseconds) |
| **Capacitor** | Holding capacitance (*e.g.*, 1 pF) | Storage capacitance (*e.g.*, 18 pF) |
| **Load impedance** | High (*e.g.*, ~1 MΩ) | Low (*e.g.*, ~2 KΩ) |

It is important to emphasize that differences in the set of parameter values is what determines whether a system functions as a sample-and-hold system or an energy transfer system. For example, there is nothing special in the structure of a holding capacitance as compared to the structure of a storage capacitance. A circuit designer could, in theory, swap the holding capacitance in a sample-and-hold system with the storage capacitance in an energy transfer system and still have a sample-and-hold system by appropriately adjusting the sampling aperture and load impedance to "match" the larger capacitor value of the holding capacitance.

It is important that changing one parameter without adjusting the other parameters will prevent each system from operating as intended or have other problems. For example, using a non-negligible sampling aperture in a sample-and-hold system is unnecessary as the holding capacitance can be fully charged (to the voltage of the input signal) with a negligible aperture, but using a non-negligible sampling aperture may distort or destroy the input EM signal by transferring to much of its energy to the holding capacitance. *Id.* at 62:30–39.

Even worse, using a high load impedance in an energy transfer system or a low load impedance in a sample-and-hold system could result in a system with poor performance. *See, e.g.*, *id.* at 65:52–55. More specifically, in the latter situation, the low value of the holding capacitance combined with a low load impedance means that its corresponding time constant $\tau$ is very low, which means that the holding capacitance may discharge significantly when the switching module

is open. As a result, the down-converted signal "cannot provide optimal voltage reproduction, and has relatively negligible power available at the output." *Id.* at 64:49–51.

In the former situation, the high value of the storage capacitance combined with a high load impedance means that its corresponding time constant τ is very high, which means it will take considerably more time (as compared to a low load impedance) to discharge the storage capacitance. This may result in less than optimal voltage reproduction, *e.g.*, when the voltage of the input EM signal is lower than the voltage across the capacitor. Furthermore, the down-converted signal could have substantially less power (*e.g.*: $V^2/R$; ~2 mV and 1 MΩ) than the energy transfer system with a low impedance load (*e.g.*: $V^2/R$; ~2 mV and 2 kΩ) or even the sample-and-hold system with a high impedance load (*e.g.*: $V^2/R$; ~5 mV and 1 MΩ). *See id.* at 67:28–33.

## II. LEGAL STANDARD

### A. General principles

The general rule is that claim terms are generally given their plain-and-ordinary meaning. *Phillips v. AWH Corp.*, 415 F.3d 1303, 1312 (Fed. Cir. 2005) (*en banc*); *Azure Networks, LLC v. CSR PLC*, 771 F.3d 1336, 1347 (Fed. Cir. 2014), *vacated on other grounds*, 575 U.S. 959, 959 (2015) ("There is a heavy presumption that claim terms carry their accustomed meaning in the relevant community at the relevant time.") (internal quotation omitted). The plain-and-ordinary meaning of a term is the "meaning that the term would have to a person of ordinary skill in the art in question at the time of the invention." *Phillips*, 415 F.3d at 1313.

The "only two exceptions to [the] general rule" that claim terms are construed according to their plain-and-ordinary meaning are when the patentee (1) acts as his/her own lexicographer or (2) disavows the full scope of the claim term either in the specification or during prosecution.

*Thorner v. Sony Computer Ent. Am. LLC*, 669 F.3d 1362, 1365 (Fed. Cir. 2012). The Federal Circuit has counseled that "[t]he standards for finding lexicography and disavowal are exacting." *Hill-Rom Servs., Inc. v. Stryker Corp.*, 755 F.3d 1367, 1371 (Fed. Cir. 2014). To act as his/her own lexicographer, the patentee must "clearly set forth a definition of the disputed claim term" and "'clearly express an intent' to [define] the term." *Thorner,* 669 F.3d at 1365.

"Like the specification, the prosecution history provides evidence of how the PTO and the inventor understood the patent." *Phillips*, 415 F.3d at 1317. "[D]istinguishing the claimed invention over the prior art, an applicant is indicating what a claim does not cover." *Spectrum Int'l, Inc. v. Sterilite Corp.*, 164 F.3d 1372, 1379 (Fed. Cir. 1998). The doctrine of prosecution disclaimer precludes a patentee from recapturing a specific meaning that was previously disclaimed during prosecution. *Omega Eng'g, Inc. v. Raytek Corp.*, 334 F.3d 1314, 1323 (Fed. Cir. 2003). "[F]or prosecution disclaimer to attach, our precedent requires that the alleged disavowing actions or statements made during prosecution be both clear and unmistakable." *Id.* at 1325–26. Accordingly, when "an applicant's statements are amenable to multiple reasonable interpretations, they cannot be deemed clear and unmistakable." *3M Innovative Props. Co. v. Tredegar Corp.*, 725 F.3d 1315, 1326 (Fed. Cir. 2013).

A construction of "plain and ordinary meaning" may be inadequate when a term has more than one "ordinary" meaning or when reliance on a term's "ordinary" meaning does not resolve the parties' dispute. *O2 Micro Int'l Ltd. v. Beyond Innovation Tech. Co*., 521 F.3d 1351, 1361 (Fed. Cir. 2008). In that case, the Court must describe what the plain-and-ordinary meaning is. *Id.*

"Although the specification may aid the court in interpreting the meaning of disputed claim language . . ., particular embodiments and examples appearing in the specification will not

generally be read into the claims." *Constant v. Advanced Micro-Devices, Inc.*, 848 F.2d 1560, 1571 (Fed. Cir. 1988). "[I]t is improper to read limitations from a preferred embodiment described in the specification—even if it is the only embodiment—into the claims absent a clear indication in the intrinsic record that the patentee intended the claims to be so limited." *Liebel-Flarsheim Co. v. Medrad, Inc.*, 358 F.3d 898, 913 (Fed. Cir. 2004).

Although extrinsic evidence can be useful, it is "less significant than the intrinsic record in determining 'the legally operative meaning of claim language.'" *Phillips*, 415 F.3d at 1317 (quoting *C.R. Bard, Inc. v. U.S. Surgical Corp.*, 388 F.3d 858, 862 (Fed. Cir. 2004)). Technical dictionaries may be helpful, but they may also provide definitions that are too broad or not indicative of how the term is used in the patent. *Id.* at 1318. Expert testimony may also be helpful, but an expert's conclusory or unsupported assertions as to the meaning of a term are not. *Id.*

**B. Claim differentiation**

Under the doctrine of claim differentiation, a court presumes that each claim in a patent has a different scope. *Phillips*, 415 F.3d at 1314–15. The presumption is rebutted when, for example, the "construction of an independent claim leads to a clear conclusion inconsistent with a dependent claim." *Id.* The presumption is also rebutted when there is a "contrary construction dictated by the written description or prosecution history." *Seachange Int'l., Inc. v. C-COR, Inc.*, 413 F.3d 1361, 1369 (Fed. Cir. 2005). The presumption does not apply if it serves to broaden the claims beyond their meaning in light of the specification. *Intellectual Ventures I LLC v. Motorola Mobility LLC*, 870 F.3d 1320, 1326 (Fed. Cir. 2017).

**C. Whether the Preamble is Limiting**

Courts presume that the preamble does not limit the claims. *Am. Med. Sys., Inc. v. Biolitec, Inc.*, 618 F.3d 1354, 1358 (Fed. Cir. 2010). But "[i]n general, a preamble limits the invention if it

recites essential structure or steps, or if it is 'necessary to give life, meaning, and vitality' to the claim." *Catalina Mktg. Int'l, Inc. v. Coolsavings.com, Inc.*, 289 F.3d 801, 808 (Fed. Cir. 2002) (quoting *Pitney Bowes, Inc. v. Hewlett-Packard Co.*, 182 F.3d 1298, 1305 (Fed. Cir. 1999)). "Conversely, a preamble is not limiting 'where a patentee defines a structurally complete invention in the claim body and uses the preamble only to state a purpose or intended use for the invention.'" *Catalina*, 289 F.3d at 808 (quoting *Rowe v. Dror*, 112 F.3d 473, 478 (Fed. Cir. 1997)). The Federal Circuit has provided some "guideposts" regarding whether the preamble is limiting: (1) preamble provides antecedent basis, (2) preamble is essential to understand limitations or terms in the claim body, (3) preamble recites "additional structure or steps underscored as important by the specification," and (4) "clear reliance on the preamble during prosecution to distinguish the claimed invention from the prior art." *Id.*

**D. Indefiniteness**

"[I]ndefiniteness is a question of law and in effect part of claim construction." *ePlus, Inc. v. Lawson Software, Inc.*, 700 F.3d 509, 517 (Fed. Cir. 2012). Patent claims must particularly point out and distinctly claim the subject matter regarded as the invention. 35 U.S.C. § 112, ¶ 2. A claim, when viewed in light of the intrinsic evidence, must "inform those skilled in the art about the scope of the invention with reasonable certainty." *Nautilus Inc. v. Biosig Instruments, Inc.*, 572 U.S. 898, 910 (2014). If it does not, the claim fails § 112, ¶ 2 and is therefore invalid as indefinite. *Id.* at 901. Whether a claim is indefinite is determined from the perspective of one of ordinary skill in the art as of the time the application was filed. *Id.* at 911.

In the context of a claim governed by § 112, ¶ 6, the claim is indefinite if the claim fails to disclose adequate corresponding structure to perform the claimed functions. *Williamson*, 792 F.3d at 1351–52. The disclosure is inadequate when one of ordinary skill in the art "would be unable

to recognize the structure in the specification and associate it with the corresponding function in the claim." *Id.* at 1352. Computer-implemented means-plus-function claims are indefinite unless the specification discloses an algorithm to perform the function associated with the limitation. *Noah Sys., Inc. v. Intuit Inc.*, 675 F.3d 1302, 1319 (Fed. Cir. 2012).

## III. LEGAL ANALYSIS

### A. Terms #1 to #5: Terms the Court Previously Construed

| Term | Plaintiff's Proposed Construction | Defendants' Proposed Construction |
|---|---|---|
| #1: "energy storage element" / "storage element" / "storage device" / "storage module"<br><br>U.S. Patent No. 7,292,835, Claims 1, 3, 4, 18, 20; U.S. Patent No. 6,266,518, Claim 16; U.S. Patent No. 8,660,513, Claim 19<br><br>Proposed by Both Sides | **Energy storage element** / **storage element**: "an element of an energy transfer system that stores non-negligible amounts of energy from an input electromagnetic signal"<br><br>**Storage device**: "a device of an energy transfer system that stores non-negligible amounts of energy from an input electromagnetic signal"<br><br>**Storage module**: "a module of an energy transfer system that stores non-negligible amounts of energy from an input electromagnetic signal" | "a [device / module / element] that stores non-negligible amounts of energy from an input electromagnetic signal" |
| #2: "switch"<br><br>U.S. Patent No. 6,049,706, Claims 86, 87, 88, 91, 93; U.S. Patent No. 7,292,835, Claims 18, 19, 20; U.S. Patent No. 8,660,513, Claim 19<br><br>Proposed by Plaintiff | Plain-and-ordinary meaning wherein the plain-and-ordinary meaning is "an electronic device for opening and closing a circuit as dictated by an independent control input" | "an electronic device for opening and closing a circuit" |

| | | |
|---|---|---|
| #3: "harmonic" / "harmonics"<br><br>U.S. Patent No. 6,049,706, Claims 8, 19; ; U.S. Patent No. 6,266,518, Claims 1, 2<br><br>Proposed by Both Sides | **Harmonic**: "A sinusoidal component of a periodic wave that has a frequency that is an integer multiple of the fundamental frequency of the periodic waveform and including the fundamental frequency as the first harmonic"<br><br>**Harmonics**: "A frequency or tone that, when compared to its fundamental or reference frequency or tone, is an integer multiple of it and including the fundamental frequency as the first harmonic" | **Harmonic**: "A sinusoidal component of a periodic wave that has a frequency that is an integer multiple of the fundamental frequency of the periodic wave"<br><br>**Harmonics**: "Sinusoidal components of a periodic wave each of which have a frequency that is an integer multiple of the fundamental frequency of the periodic wave" |
| #4: "under-sampling"<br><br>U.S. Patent No. 6,049,706, Claims 8, 9, 19<br><br>Proposed by Plaintiff | "sampling at an aliasing rate" or "sampling at less than or equal to twice the frequency of the input signal" | "sampling at less than or equal to twice the frequency of the input signal" |
| #5: "A cable modem for down-converting an electromagnetic signal having complex modulations"<br><br>U.S. Patent No. 7,292,835, Claim 1<br><br>Proposed by Both Sides | The preamble is limiting. | Only the portion of the preamble reciting "an electromagnetic signal having complex modulations" is limiting." |

This Court previously construed these five terms in prior cases. *ParkerVision, Inc. v. Intel Corp.*, No. 6:20-cv-00108, ECF No. 75, at 3, 4-5, 6 (W.D. Tex. Jan. 28, 2021); *ParkerVision, Inc. v. Intel Corp.*, No. 6:20-cv-00562, ECF No. 66 at 2, 5 (W.D. Tex. Oct. 22, 2021); *ParkerVision, Inc. v. LG Elecs., Inc.*, No. 6:21-cv-00520, ECF No. 55 at 28, 29, 30, 32 (W.D. Tex. June 21, 2022); *ParkerVision, Inc. v. Hisense Co., Ltd.*, No. 6:20-cv-00870, ECF No. 72 at 97, 103, 104,

107 (W.D. Tex. Aug. 29, 2022); *ParkerVision, Inc. v. TCL Indus. Holdings Co., Ltd.*, No. 6:20-cv-00945, ECF No. 68 at 97, 103, 104, 107 (W.D. Tex. Aug. 29, 2022).

With respect to Term #1, the Federal Circuit affirmed the PTAB's construction of "storage element" as "an element of a system that stores non-negligible amounts of energy from an input EM signal." *ParkerVision, Inc. v. Vidal*, 2022-1548 at 12 (Fed. Cir. Dec. 15, 2023). Accordingly, the Court adopts that construction for Term #1.

With respect to Terms #2 to #4, the Court has reviewed the parties' arguments and concluded that they have not presented any new arguments that would compel the Court to change or otherwise modify its previous construction.

With respect to Term #5, the preamble of independent Claim 1 recites "A cable modem for down-converting an electromagnetic signal having complex modulations, comprising[.]" Judge Gilliland previously construed that the preamble was partially limiting, namely, only the portion of the preamble reciting "an electromagnetic signal having complex modulations" is limiting. *ParkerVision v. LG*, No. 6:21-cv-00520, ECF No. 55 at 22–24, 29. In this case, Plaintiff proposed that "cable modem" in the preamble of independent Claim 1 is also limiting. As compared to the arguments it made in prior cases, Plaintiff only presents one new argument, namely:

> First, [Defendants] assert[] that [Plaintiff's] antecedent basis argument fails because "cable modem" does not provide antecedent basis for any term found in the body of claim 1. But such a position ignores Federal Circuit law. In *Pacing Techs., LLC v. Garmin Int'l, Inc.*, the Federal Circuit held the entire preamble of the independent claim was limiting where the term "user" in the preamble provided antecedent basis for a term in the body of the independent claim and the term "repetitive motion pacing system" (also in the preamble) provided antecedent basis for that term in a dependent claim. 778 F.3d 1021, 1024 (Fed. Cir. 2015). The facts in this case are similar to *Pacing*. Here, the term "an electromagnetic signal" provides antecedent basis for a term in the body of independent claim 1 and the term "cable modem" (also in the preamble) provides antecedent basis for a term in dependent claims 16 and 17. As such, the entire preamble is limiting.

Sur-Reply at 3–4 (some internal citations omitted).

The Court does not find this argument with respect to "cable modem" to be persuasive for the reasons that follow. ***First***, the presumption is that "cable modem" in the preamble is not limiting. *Am. Med. Sys., Inc. v. Biolitec, Inc.*, 618 F.3d 1354, 1358 (Fed. Cir. 2010).

***Second***, in *Pacing Techs.*, the Federal Circuit did not find that the preamble of the independent claim was limiting solely because it provided antecedent basis for the dependent claim. Rather, the Federal Circuit held that the preamble of independent Claim 25 was limiting because it provided antecedent basis for "the user" in the body of Claim 25. *Pacing Techs.*, 778 F.3d at 1024. In addition, the Federal Circuit also held that the preamble of the independent claim was limiting because "user" (and "repetitive motion pacing system") in the preamble "are necessary to understand positive limitations in the body of claims in the '843 patent[.]" *Id.*

***Third***, although the Federal Circuit held that the preamble of Claim 25 is limiting because it "similarly provides antecedent basis for the term 'repetitive motion pacing system' recited as a positive limitation in the body of claim 28, which depends from claim 25," this Court concludes that the claim-at-issue in *Pacing Techs* is distinguishable from Claim 1 in this case for at least two reasons. The first reason is that the Federal Circuit held that the preamble was limiting because, *inter alia*, the preamble in the independent claim provided antecedent basis for a term ("user") in the independent claim. Here, by contrast, the body of independent Claim 1 does not even recite the term "cable modem." As such, the Court concludes that it is incorrect to hold that the preamble of independent Claim 1 is limiting solely because it provides antecedent basis for a term in a dependent claim. The error of such a conclusion is manifest if there was no dependent claim. In that situation, a non-existent dependent claim plainly cannot cause the preamble of the independent claim to be limiting.

The second reason is that dependent claims expressly "incorporate" the limitation of the independent claim. 35 U.S.C. § Section 112(d) ("A claim in dependent form shall be construed to incorporate by reference all the limitations of the claim to which it refers."). For example, dependent Claim 16 could be rewritten as follow:

| | |
|---|---|
| Limitations incorporated from Claim 1 | A cable modem for down-converting an electromagnetic signal having complex modulations, comprising:<br>an oscillator to generate an in-phase oscillating signal;<br>a phase shifter to receive said in-phase oscillating signal and to create a quadrature-phase oscillating signal;<br>a first frequency down-conversion module to receive the electromagnetic signal and said in-phase oscillating signal;<br>a second frequency down-conversion module to receive the electromagnetic signal and said quadrature-phase oscillating signal; wherein<br>said first frequency down-conversion module further comprises a first frequency translation module and a first storage module, wherein said first frequency translation module samples the electromagnetic signal at a rate that is a function of said in-phase oscillating signal, thereby creating a first sampled signal; and<br>said second frequency down-conversion module further comprises a second frequency translation module and a second storage module, wherein said second frequency translation module samples the electromagnetic signal at a rate that is a function of said quadrature-phase oscillating signal, thereby creating a second sampled signal. |
| Limitation from Claim 16 | wherein the electromagnetic signal has been transmitted over a coaxial cable to the cable modem. |

Dependent Claim 17 could also be rewritten in a similar manner. Therefore, because the limitations of the independent claim are separately present in the dependent claim, the presence of "cable modem" in the body of dependent Claims 16 and 17 cannot cause "cable modem" in the preamble of independent Claim 1 to be limiting. Rather, it can only cause the preamble of

dependent Claims 16 or 17 to be limiting after they incorporate the limitations from independent Claim 1.[2]

For at least these reasons, the Court concludes that Plaintiff has not overcome the presumption that the preamble is not limiting and the Court declines to find that "cable modem" in the preamble of Claim 1 is limiting.

**B. Term #6: "delaying said down-converted input samples"**

| Term | Plaintiff's Proposed Construction | Defendants' Proposed Construction |
|---|---|---|
| #6: "delaying said down-converted input samples"<br><br>U.S. Patent No. 6,049,706, Claim 8<br><br>Proposed by Defendants | Plain-and-ordinary meaning | "holding said down-converted samples" |

**<u>The Parties' Positions:</u>**

Defendants contend that Claim 8 and its dependent claims "do not make clear what constitutes 'delaying' the down-converted input samples." Opening at 14. Defendants contend that a POSITA "would understand that the patent equates 'delay' to 'holding' down-converted input samples for a known amount of time" and "does not refer to any form of inherent delay caused by transmission of a down-converted sample through a circuit or circuit element." *Id.* at 14–15.

[2] In its Sur-Reply, Plaintiff requests that "[e]ven if the Court finds the term 'cable modem' non-limiting as to claim 1, the term should be limiting as to dependent claims 16 and 17." Sur-Reply at 4 n.2 (quoting *SEVEN Networks, LLC v. Apple Inc.*, 2020 U.S. Dist. LEXIS 55476, at *87 (E.D. Tex. Mar. 31, 2020)). But because Plaintiff appeared to raise this issue for the first time in its Sur-Reply, the Court declines to consider this argument. *Liberty Mut. Fire Ins. Co. v. Fowlkes Plumbing, L.L.C.*, 850 F. App'x 213, 217 (5th Cir. 2021) ("a new argument cannot be raised for the first time in a reply brief, let alone a sur-reply.").

Defendants contend that the '706 Patent "consistently equates 'delaying' a down-converted input sample with 'holding' it for a known amount of time." *Id.* at 15 (citing'706 Patent at Fig. 16 (step 1608), Fig. 18 (step 1808), Fig. 22 (step 2208), Fig. 24 (step 2412), 15:45, 16:24–25, 20:44–47, 20:54–56, 34:46–48). Defendants contend that the same is true for "delay module." *Id.* at 15 (citing '706 Patent at 32:57–29, 32:30–43). Defendants contend that, by contrast, the '706 Patent "never suggests that 'delay' of a down-converted input sample is caused by mere transmission through a circuit." *Id.* Rather, according to Defendant, "'delay' is always designed to impede or hold a signal for a known amount of time." *Id.* (citing '706 Patent at 35:19–27, 38:3–7).

Defendants contend that "where …a patent repeatedly and consistently characterizes a claim term in a particular way, it is proper to construe the claim term in accordance with that characterization." *Id.* at 15–16 (quoting *Wisconsin Alumni Rsch. Found. v. Apple Inc.*, 905 F.3d 1341, 1351 (Fed. Cir. 2018) (internal quotation marks omitted)).

In its Response, Plaintiff contends that the term does not require construction as the language of the claim term is "straightforward" and that Defendants do not allege it is unclear. Response at 16.

Plaintiff contends that Defendants' proposed construction "narrow[s] the step of 'delaying' to a particular type of delaying (i.e., holding) that is performed by a specific type of component (a capacitor)." *Id.* Plaintiff contends that Defendants' proposed construction improperly changes the meaning of the term and also excludes disclosed embodiments. *Id.*

With respect to Defendants' argument that the specification "consistently equates" "delaying" with "holding," Plaintiff contends that Defendants cherry pick some citations while ignoring others. *Id.* Plaintiff contends that the '706 Patent discloses that "discloses that delay modules can be (1) holding capacitors, or (2) analog delay lines," but that Defendants' proposed

construction excludes the latter embodiment as it does not hold a sample. *Id.* at 16–17 (citing '706 Patent at Fig. 34, 35:19–24 ("[t]he delay modules 1710, 1722 can also each be implemented using an analog delay line, such as the analog delay line 3404 in FIG. 34.")).

In its Reply, Defendants contend that the '706 Patent "consistently and repeatedly equates 'delaying' with 'holding' downconverted input samples for a known amount of time." Reply at 9. With respect to Plaintiff's argument that analog delay lines can perform the function of delaying samples, Defendants contend that the 706 Patent "never suggests that 'delay' of a down-converted input sample is caused by mere transmission through a circuit," thus excluding the analog delay lines from the scope of this claim term. *Id.* (citing Opening at 15).

In its Sur-Reply, Plaintiff contends that "holding" is one way to delay a signal and that the '706 Patent does not limit "delaying" to "holding" for multiple reasons. Sur-Reply at 5. Plaintiff first contends that "where the patentees wanted to limit the scope of the claims to a particular sample-and-hold embodiment, they explicitly used the term 'holding' in the claim language." *Id.* (citing'706 Patent, Claim 78). Plaintiff second contends that the passages Defendants' cites are "clearly" described as embodiments. *Id.* (citing '706 Patent at 34:63–67, 32:52–55). Plaintiff finally contends that the specification discloses embodiments that—contrary to Defendants' proposed construction—delay a sample of a signal without holding it.

With respect to Defendants' argument that the analog delay line embodiment is outside the scope of this term, Plaintiff contends that Defendants admitted that "delay" is "always designed to *impede* or hold a signal for a known amount of time." *Id.* (emphasis in Plaintiff's brief). Based on this statement, Plaintiff contends that Defendants acknowledge that analog delay lines can perform the delaying function by impeding, rather than holding, a sample. *Id.*

**The Court's Analysis:**

After reviewing the parties' arguments and considering the applicable law, the Court agrees with Plaintiff that this term should be construed according to its plain-and-ordinary meaning for the reasons that follow. ***First***, the "heavy presumption" is that terms should be construed according to their plain-and-ordinary meaning. *Azure Networks*, 771 F.3d at 1347. ***Second***, Defendants do not expressly allege lexicography or disclaimer, which are the only two exceptions to the general rule that a term should be construed as having its plain-and-ordinary meaning. *Thorner*, 669 F.3d at 1365.

***Third***, the Court disagrees with Defendants that the '706 Patent limits the scope of this term to "holding" embodiments. More specifically, the '706 Patent expressly describes that analog delay lines—which the parties agree do not "hold" a sample—delay a signal. '706 Patent at 35:23–24 ("The analog delay line 3404 operates to delay an input signal by a known amount."). As such, Defendants' proposed construction improperly excludes this embodiment. *Oatey Co. v. IPS Corp.*, 514 F.3d 1271, 1276 (Fed. Cir. 2008) ("We normally do not interpret claim terms in a way that excludes embodiments disclosed in the specification. . . . where claims can reasonably be interpreted to include a specific embodiment, it is incorrect to construe the claims to exclude that embodiment, absent probative evidence to the contrary.").

This embodiment—which does not hold a sample—also contradicts Defendants' argument that the '706 Patent "consistently and repeatedly equates 'delaying' with 'holding' downconverted input samples for a known amount of time" (Reply at 9). As such, this fact further bolsters the Court's conclusion that Defendants' proposed construction is incorrect.

Therefore, for the reasons described above, the Court finds that the term should be construed according to its plain-and-ordinary meaning.

### C. Term #7: "in an integrated manner"

| Term | Plaintiff's Proposed Construction | Defendants' Proposed Construction |
|---|---|---|
| #7: "in an integrated manner"<br><br>U.S. Patent No. 6,049,706, Claim 19<br><br>Proposed by Defendants | Plain-and-ordinary meaning | "in a single, unified manner" |

**<u>The Parties' Positions:</u>**

Defendants contend that the patentee acted as their own lexicographer. Opening at 16. More specifically, Defendants contend that the '706 Patent defines "integrated" as "single, unified." *Id.* (quoting '706 Patent at 10:31–33 ("According to the present invention, frequency selectivity and frequency translation are performed as a single unified (i.e., integrated) operation."), 14:40–43, 22:24–27).

Defendants contend that use of "i.e." is definitional. *Id.* at 16–17 (citing *Rembrandt Wireless Techs., LP v. Samsung Elecs. Co., Ltd.*, 853 F.3d 1370, 1376 (Fed. Cir. 2017)). Defendants further contend that "the specification provides no indication that 'i.e.' is not definitional." *Id.* at 17 (citing cases).

In its Response, Plaintiff contends that there is no lexicography and that Defendants ignore how the specification actually uses "integrated." Response at 17. Plaintiff contends that the specification actually uses "integrated" synonymously with "combined." *Id.* (citing '706 Patent at 13:53–58, 14:40–48).

With respect to "i.e.," Plaintiff contends that Defendants have it "backwards." *Id.* at 18. Namely, Plaintiff contends that "integrated" is used to define "single unified," and not the other way around. *Id.*

In its Reply, Defendants contend that Plaintiff's argument that the patentee did not act as their own lexicographer is mere attorney argument, rather than intrinsic evidence. Reply at 10.

In its Sur-Reply, Plaintiff contends that Defendants do not raise any new arguments in its Reply brief. Sur-Reply at 6.

**The Court's Analysis:**

After reviewing the parties' arguments and considering the applicable law, the Court agrees with Plaintiff that the patentee did not act as their own lexicographer and that this term should be construed according to its plain-and-ordinary meaning. With respect to lexicography, the Court agrees with Plaintiff that the "i.e." statement ("According to the present invention, frequency selectivity and frequency translation are performed as a single unified (i.e., integrated) operation.") is not definitional. '706 Patent at 10:31–33. Rather, the "i.e." statement provides further explanation as to the meaning of what "single unified" means. Typically, when "i.e." is used to define a term, the term appears before "i.e." and then the definition for that term appears after "i.e." In the '706 Patent, however, the alleged definition appears before "i.e." while the alleged term being defined "integrated" appears after the "i.e." Accordingly, the Court concludes that the patentee did not act as their own lexicographer to define "integrated" as it neither clearly expressed an intent to define the term nor provided a clear definition for said term. *Hill-Rom Servs.*, 755 F.3d at 1371.

Further bolstering the Court's conclusion that the patentee did not define "integrated" to mean "single, unified" is the fact that the specification recites that "frequency selectivity operation 1202 and the frequency translation operation 1204 are performed as an integrated and unified operation." '706 Patent at 16:4–7. If "integrated" were defined to mean "single, unified," then

"unified" in the this passage would be superfluous, which tends to indicate that the patentee did not act as their own lexicographer to define "integrated."

***Construction***: Because the "heavy presumption" is that terms should be construed according to their plain-and-ordinary meaning and because Defendants does not allege lexicography or disclaimer, which are the only two exceptions to the general rule that a term should be construed as having its plain-and-ordinary meaning, the Court concludes that the term should be construed as having its plain-and-ordinary meaning. *Azure Networks*, 771 F.3d at 1347; *Thorner*, 669 F.3d at 1365.

Therefore, for the reasons described above, the Court finds that the term should be construed according to its plain-and-ordinary meaning.

**D. Term #8: "wherein step (2) is at least partially integral with step (1)"**

| Term | Plaintiff's Proposed Construction | Defendants' Proposed Construction |
|---|---|---|
| #8: "wherein step (2) is at least partially integral with step (1)"<br><br>U.S. Patent No. 6,049,706, Claim 17<br><br>Proposed by Defendants | Plain-and-ordinary meaning | Indefinite |

**<u>The Parties' Positions:</u>**

Defendants contend that "partially integral" is "incoherent" because the dictionary definition of "integral" is "formed as a unit with another part," "partially integral" makes no sense because "either something is formed as a 'unit' or it is not." Opening at 18 (quoting Opening, Ex. 18 at 628).

Defendants contend that while the specification depicts that "separate delay steps may be performed by the same module performing the down-conversion," "the patent never shows a delay step being only partially 'formed as a unit' with down-conversion step." *Id.* at 18–19 (citing '706 Patent at Figs. 16, 19, 26). Defendants therefore contend that a POSITA would not understand the claim scope with reasonable certainty. *Id.* at 19 (citing *MONKEYmedia, Inc. v. Apple, Inc.*, No. A-10-CA-319-SS, 2015 WL 4758489, at *12-13 (W.D. Tex. Aug. 11, 2015)).

In its Response, Plaintiff contends that Defendants "improperly read[] the term out of context, isolated from the specification." *Id.* at 19. By contrast, Plaintiff contends that "partially integral" in the claim term simply means that "Step (2) can be performed concurrently with Step (1)." Response at 18, 19 (citing '706 Patent at 13:53–58 ("the input filtering operation performed by the UDF module 1102 is integrated with the frequency translation operation. The input filtering operation can be viewed as being performed concurrently with the frequency translation operation.").

In its Reply, with respect to Plaintiff's concurrent argument, Defendants contend that the passage that Plaintiff cites to in support of that argument uses "integrated" and not "partially integral" or "partially integrated. Reply at 11.

In its Sur-Reply, Plaintiff contends that Defendants improperly read the claim language in isolation from the specification and improperly rely on extrinsic evidence. Sur-Reply at 6. Plaintiff contends that Defendants ignore passages from the specification that explain that "the frequency translation operation (e.g., step 1 - under-sampling) and input filtering operation (e.g., step 2 - delaying) can be performed 'concurrently.'" *Id.* at 7 (citing '706 Patent at 13:53–58). Plaintiff contends that, as compared to the prior art which used separate components for frequency translation and input filtering, the specification describes using a single component to performs

the two functions concurrently. *Id.* (citing '706 Patent at Fig. 3, 14:32–36 (prior art); Fig. 13, 14:52–56).

**The Court's Analysis:**

After reviewing the parties' arguments and considering the applicable law, the Court agrees with Plaintiff that the term is not indefinite. The Court agrees with Plaintiff that a POSITA, reading the claim in light of the specification, would understand with reasonable certainty that "partially integrated" refers to a single component performing step (1) (under-sampling) concurrently with step (2) (delaying). More specifically, the specification recites that "[i]n practice, the input filtering operation performed by the UDF module 1102 is integrated with the frequency translation operation. The input filtering operation can be viewed as being performed concurrently with the frequency translation operation." '706 Patent at 13:52–58. A POSITA would understand that this passage describes that a single component performs both of these functions, *i.e.,*, performs these functions concurrently. Based on that, the Court concludes a POSITA would understand that "wherein step (2) is at least partially integral with step (1)" refers to concurrently performing these two steps. In light of this understanding, the Court concludes that Defendants have not provided clear and convincing evidence that this term is indefinite.

***Construction***: Because the "heavy presumption" is that terms should be construed according to their plain-and-ordinary meaning and because Defendants does not allege lexicography or disclaimer, which are the only two exceptions to the general rule that a term should be construed as having its plain-and-ordinary meaning, the Court concludes that the term should

be construed as having its plain-and-ordinary meaning. *Azure Networks*, 771 F.3d at 1347; *Thorner*, 669 F.3d at 1365.

Therefore, for the reasons described above, the Court finds that the term is not indefinite and should be construed according to its plain-and-ordinary meaning.

**E. Term #9: "pulse widths that are established to improve energy transfer from said input signal to said down-converted image"**

| Term | Plaintiff's Proposed Construction | Defendants' Proposed Construction |
|---|---|---|
| #9: "pulse widths that are established to improve energy transfer from said input signal to said down-converted image"<br><br>U.S. Patent No. 6,049,706, Claim 18<br><br>Proposed by Defendants | Plain-and-ordinary meaning | Indefinite |

**<u>The Parties' Positions:</u>**

Defendants contend that this term is indefinite because the '706 Patent "does not provide guidance as to how one of skill in the art should determine whether an 'improvement' in 'energy transfer' has occurred, including by failing to provide any baseline against which to measure the supposed 'improvement.'" Opening at 19. Defendants contend that "[a]t most, the patent describes that use of 'non-negligible apertures that tend away from zero' can 'also' indirectly 'improve energy transfer from the input signal 5304 to the down-converted output signal 5312' due to 'substantial[]' impedance matching." *Id.* (quoting '706 Patent at 32:9–18). Defendants contend that "the patent demonstrates that 'improv[ing] energy transfer' is not limited to 'impedance matching,' *see, e.g.*, claims 18 and 92, and the patent's disclosures provide no guidance about how to measure a supposed improvement other than from 'impedance matching,'

including the appropriate criteria for determining whether such an improvement has occurred." *Id.* at 19–20.

In its Response, Plaintiff contends that the Court has already considered this term in previous cases. Response at 19. Plaintiff contends that this claim term simply means that "pulses having *non*-negligible apertures are being used." *Id.* (emphasis in Plaintiff's brief). Plaintiff contends that the specification describes that non-negligible apertures "improve" energy transfer as compared to negligible apertures as the former increases the amount of time electrical charge (*i.e.*, energy) is transferred to a storage device. *Id.* at 19–21 (citing '706 Patent at Figs. 53A, 53D, 29:31–41, Fig. 43B, 32:9-18).

In its Reply, Defendants contend that Plaintiff does not dispute that "an improvement in energy transfer can result from something other than the supposed 'impedance matching' caused by use of 'non-negligible apertures.'" Reply at 11.

Defendants contend that Plaintiff is incorrect that this term refers to non-negligible apertures for three reasons. *Id.* Defendants first contend that some claims (Claims 88, 91, 106, 111) recite using "non-negligible apertures" to "increase energy transfer," which indicates that "improving energy transfer" must mean something else besides using non-negligible apertures. *Id.* at 11–12 (citing *Gonza, LLC v. Mission Competition Fitness Equip., LLC*, No. W-21-CV-00771-ADA, 2022 WL 1609437, at *5 (W.D. Tex. May 20, 2022)). Defendants also contend that the specification does not provide guidance as to "how to determine (i) whether non-negligible apertures tending away from zero time in duration are being used … and (ii) whether a supposed 'improvement' in energy transfer has occurred with the use of non-negligible apertures[.]" *Id.* at 12 (citing *JobDiva, Inc. v. Monster Worldwide, Inc.*, No. 13-cv-8229, 2014 WL 5034674, at *18

(S.D.N.Y. Oct. 3, 2014)). Defendants finally contend that the '706 Patent does not "describe how to measure an improvement in energy transfer other than from such 'impedance matching.'" *Id.*

In its Sur-Reply, Plaintiff contends that "[t]he claim term is straightforward–as pulse widths are increased (to non-negligible apertures), a switch controlled by those pulses will be ON (closed) for a longer period of time, and more energy is being transferred to e.g., a storage device (capacitor) from an input signal." Sur-Reply at 8. Plaintiff contends that Defendants do not substantively address this argument, but rather attempts to confuse the issue by focusing on the irrelevant issue of impedance matching. *Id.*

With respect to Defendants' claim differentiation argument (Claims 88, 91, 106, 111), Plaintiff contends that "a patentee is entitled to vary the scope of different claims by using different language to capture similar concepts." *Id.* at 8–9 (citing *Curtiss-Wright Flow Control Corp. v. Velan, Inc.*, 438 F.3d 1374, 1380 (Fed. Cir. 2006)). With respect to Defendants' argument that there is no guidance as to how to measure the claimed improvement, Plaintiff contends that "the claim has nothing to do with the amount of improvement[,]" but rather that there is an improvement. *Id.* at 9. Plaintiff further contends that the specification describes that energy transfer can be "improved" by using non-negligible apertures. *Id.*

**<u>The Court's Analysis:</u>**

After reviewing the parties' arguments and considering the applicable law, the Court agrees with Plaintiff that the term is not indefinite. The claim term requires that the improved energy transfer is due to the establishment of the pulse width, and not due to impedance matching. As such, Defendants' impedance matching-based arguments are misplaced.

The specification describes that non-negligible apertures, which have wider pulse widths, improve energy transfer. More specifically, the specification describes that "[t]he pulse aperture may also be referred to as the pulse width as will be understood by those skilled in the art(s)." '706 Patent at 30:38–40. The specification further describes that aperture may be negligible or non-negligible. *See, e.g.*, '706 Patent at 32:4–5, Fig. 53D (negligible); 32:9–11, Fig. 43B (non-negligible). When the aperture is non-negligible, the pulse width is wider than when the aperture is negligible. *Id.* Using Figure 53A as an example, the pulses control when switch 5308 is open or closed. *Id.* at 29:13–15. When the switch 5308 is closed, charge is transferred from the input signal 5304 to capacitor 5310. *Id.* at 29:18–21. Accordingly, the longer the switch is closed, the more energy is transferred from the input signal to the capacitor. *See, e.g.*, *id.* Therefore, when the aperture is non-negligible, the pulse width is wider (than when the aperture is negligible), which means the switch is closed for a longer period of time. And when the switch is closed for a longer period of time, more energy is transferred, *i.e.*, there is improved energy transfer. Based on that understanding, a POSITA would understand the scope of this claim term with reasonable certainty. *Nautilus*, 572 U.S. at 910.

With respect to Defendants' claim differentiation argument, the Court does not find it persuasive as the claims that recite "non-negligible aperture" (Claims 88, 91, 106, 109, 111) do not depend on Claim 18. As such, the Court concludes that the patentee simply chose to use "different terms to define the exact same subject matter." *Curtiss-Wright*, 438 F.3d at 1380.

For these reasons, the Court concludes that Defendants have not provided clear and convincing evidence that this term is indefinite.

***Construction***: Because the "heavy presumption" is that terms should be construed according to their plain-and-ordinary meaning and because Defendants does not allege lexicography or disclaimer, which are the only two exceptions to the general rule that a term should be construed as having its plain-and-ordinary meaning, the Court concludes that the term should be construed as having its plain-and-ordinary meaning. *Azure Networks*, 771 F.3d at 1347; *Thorner*, 669 F.3d at 1365.

Therefore, for the reasons described above, the Court finds that the term is not indefinite and should be construed according to its plain-and-ordinary meaning.

**F. Term #10: "wherein said down-converting operation is performed so as to improve energy transfer from said input signal to a down-converted image"**

| Term | Plaintiff's Proposed Construction | Defendants' Proposed Construction |
|---|---|---|
| #10: "wherein said down-converting operation is performed so as to improve energy transfer from said input signal to a down-converted image"<br><br>U.S. Patent No. 6,049,706, Claim 26<br><br>Proposed by Defendants | Plain-and-ordinary meaning | Indefinite |

**<u>The Parties' Positions:</u>**

Defendants contend that this term is indefinite for the same reasons that they provided for why Term #9 is indefinite. Opening at 20.

In its Response, Plaintiff contends that "[b]y using non-negligible apertures, more energy is transferred to a storage device (capacitor) from an input signal than would be transferred by

using negligible apertures–hence, the language 'so as to improve energy transfer.'" Response at 22.

In its Reply, Defendants again contend that this term is indefinite for the same reasons that they provided for why Term #9 is indefinite.

In its Sur-Reply, Plaintiff contends that Defendants do not make any new arguments in its Reply brief, so the term is not indefinite for the reasons set forth in Plaintiff's Response.

**The Court's Analysis:**

After reviewing the parties' arguments and considering the applicable law, the Court agrees with Plaintiff that the term is not indefinite and should be construed according to its plain-and-ordinary meaning for the same reasons that the Court explained in connection with Term #9.

### G. Term #11: "tend away from zero time in duration" / "tends away from zero time in duration"

| Term | Plaintiff's Proposed Construction | Defendants' Proposed Construction |
|---|---|---|
| #11: "tend away from zero time in duration" / "tends away from zero time in duration"<br><br>U.S. Patent No. 6,266,518, Claim 3; U.S. Patent No. 6,049,706, Claims 88, 91, 96<br><br>Proposed by Defendants | Plain-and-ordinary meaning | Indefinite. |

**The Parties' Positions:**

Defendants contend that this term "is indefinite because it is a subjective term of degree and the '706 and '518 patents fail to provide any 'objective boundaries' for measuring whether a particular time duration falls within its scope." Opening at 21. Defendants contend that "tends"

implies "movement in a particular direction, not a fixed duration, but the patents never disclose or discuss control signals whose aperture-width changes during the process of down-conversion." *Id.* at 21–22.

Defendants contend that the qualifiers "non-negligible" and "negligible" do not provide objective boundaries for at least two reasons. *Id.* at 22. Defendants first contend that both allow for energy transfer, with the latter "minimizing" the amount of energy transfer while the former allows for more time for energy transfer. *Id.* Defendants contend that "[r]eliance on 'negligible' and 'non-negligible' therefore 'just shifts the uncertainty' (to minimize / provide more time), and does not resolve it." *Id.* (quoting *Semcon IP Inc. v. Huawei Device USA Inc.*, No. 2:16-cv-00437-JRG-RSP, 2017 WL 2972193, at *25 (E.D. Tex. July 12, 2017)).

Defendants secondly contend that because the specification describes that "optimized apertures 5606 are non-negligible ***and*** tend away from zero," "non-negligible" cannot be coextensive with "pulse widths that tend away from zero time in duration." *Id.* (quoting'518 Patent at 83:2–3 (emphasis in Defendants' brief))

In its Response, Plaintiff contends that the "disputed term simply means that the widths of pulses controlling a switch are being made wider." Response at 22. Plaintiff contends that the specification describes that when the aperture is very short, only a negligible amount of energy is transferred to, *e.g.*, capacitor 5310. *Id.* at 23 (citing '706 Patent at Fig. 53D, 29:31–41). Plaintiff contends that "[b]ecause pulses with non-negligible apertures have a greater width than pulses with negligible apertures, the switch 5308 is ON (closed) longer than it would be if negligible apertures were used." *Id.* at 23–24 (citing '706 Patent at 43B).

In its Reply, Defendants contend that Plaintiff "never describes any objective boundaries for how much wider the widths of the pulse must be made" "does not provide an objective

boundary between 'tend toward zero time in duration' and 'tend away from zero time in duration,'" and "provides no guidance about the upper boundary, and there are at least two limits, impedance matching and mixing." Reply at 13.

Defendants contend that the '706 and '518 patents "never disclose or discuss control signals whose aperture-width changes during the process of down-conversion." *Id.*

In its Sur-Reply, Plaintiff contends that the legal standard only requires that the specification "provides *guidance* (and *objective boundaries*) to a skilled person[.]" Sur-Reply at 10 (emphasis in Plaintiff's brief). Plaintiff contends that "specification explains the size/width of the aperture can be selected so that the UFT module will have a lower input impedance that can substantially match a source impedance of an input signal and improve energy transfer and e.g., the signal to noise ratio." *Id.* (quoting '706 Patent at 32:9–18). Plaintiff contends that a POSITA "can apply their knowledge of circuits to determine, for a specific system, what aperture size/width will accomplish these goals." *Id.*

Plaintiff contends that, in contrast to the negligible apertures depicted in Figure 53D, Figure 43B depicts non-negligible apertures, which have a greater pulse width. *Id.* at 10–11. Plaintiff contends that "[b]ecause pulses with nonnegligible apertures have a greater width than pulses with negligible apertures, the switch 5308 is ON (closed) longer than it would be if negligible apertures were used. The switch being ON longer results in non-negligible energy being transferred to the capacitor 5310." *Id.* at 11.

**<u>The Court's Analysis:</u>**

After reviewing the parties' arguments and considering the applicable law, the Court agrees with Plaintiff that the term is not indefinite. The Court agrees with Plaintiff that the meaning of

this term describes that the width of the pulses controlling the switch are wider. The specification of the '706 Patent describes that the aperture may be non-negligible or negligible. *See, e.g.*, '706 Patent at 32:4–18. The negligible aperture, which tends towards zero, closes the switch for a very short period of time such that there is "minimal disturbance of the input signal." *Id.* at 32:7–8. By contrast, the pulse width of the non-negligible aperture is wider, so that more energy from the input signal is transferred, which may result in more than minimal disturbance of the input signal. *Id.* at 32:9–18. Based on this guidance, the Court concludes a POSITA would understand what the meaning of "tend away from zero time in duration" is with reasonable certainty. *Nautilus*, 572 U.S. at 910.

The Court believes that this level of guidance is sufficient as POSITAs will be able to use their knowledge of circuits to calculate (and/or use circuit simulators) whether widening the aperture for a given circuit configuration (*e.g.*, input impedance, switch switching speed, capacitor size, *etc.*) is by a non-negligible amount that tends away from zero time.

For these reasons, the Court concludes that Defendants have not provided clear and convincing evidence that this term is indefinite.

***Construction***: Because the "heavy presumption" is that terms should be construed according to their plain-and-ordinary meaning and because Defendants does not allege lexicography or disclaimer, which are the only two exceptions to the general rule that a term should be construed as having its plain-and-ordinary meaning, the Court concludes that the term should be construed as having its plain-and-ordinary meaning. *Azure Networks*, 771 F.3d at 1347; *Thorner*, 669 F.3d at 1365.

Therefore, for the reasons described above, the Court finds that the term is not indefinite and should be construed according to its plain-and-ordinary meaning.

### H. Term #12: "to extend the time that said switch is closed for a purpose of increasing energy transferred from said input signal"

| Term | Plaintiff's Proposed Construction | Defendants' Proposed Construction |
|---|---|---|
| #12: "to extend the time that said switch is closed for a purpose of increasing energy transferred from said input signal"<br><br>U.S. Patent No. 6,049,706, Claims 88, 91, 96<br><br>Proposed by Defendants | Plain-and-ordinary meaning | Indefinite |

**<u>The Parties' Positions:</u>**

Defendants contend that the term is indefinite for at least two reasons. Opening at 23. Defendants first contend that "the patent provides no guidance about how one of skill should determine whether an 'extension' other than for 'impedance matching' is done for 'a purpose of increasing energy transfer,' including by failing to provide a baseline against which a determination can be made[.]" *Id.* Defendants also contend that this term "incorporates an element of subjective intent ('for a purpose') and the patent provides no guidance about how to assess that intent." *Id.*

In its Response, Plaintiff contends that the claim term describes that "as the pulses controlling a switch are being made wider, the longer a switch is closed and the more energy is being transferred from an input signal through the switch." Response at 24. More specifically, Plaintiff contends that "[b]ecause pulses with non-negligible apertures have a greater width than pulses with negligible apertures, the switch 5308 is ON (closed) longer than it would be if

negligible apertures were used," which results in "non-negligible energy being transferred to the capacitor 5310." *Id.* at 25. Plaintiff contends that "[t]his is the way in which to 'extend the time that said switch is closed for a purpose of increasing energy transferred from said input signal.'" *Id.*

In its Reply, Defendants contend that this term is indefinite for the same reasons it argued with respect to Term #11 ("tend away from zero time in duration" / "tends away from zero time in duration"). Reply at 13.

In its Sur-Reply, Plaintiff contends that this term is not indefinite for the reasons indefinite for the same reasons it argued with respect to Terms #9 ("pulse widths that are established to improve energy transfer from said input signal to said down-converted image") and #11. Sur-Reply at 11.

**The Court's Analysis:**

After reviewing the parties' arguments and considering the applicable law, the Court agrees with Plaintiff that the term is not indefinite and should be construed according to its plain-and-ordinary meaning for the same reasons that the Court explained in connection with Terms #9 and #11.

***Construction***: Because the "heavy presumption" is that terms should be construed according to their plain-and-ordinary meaning and because Defendants does not allege lexicography or disclaimer, which are the only two exceptions to the general rule that a term should be construed as having its plain-and-ordinary meaning, the Court concludes that the term should

be construed as having its plain-and-ordinary meaning. *Azure Networks*, 771 F.3d at 1347; *Thorner*, 669 F.3d at 1365.

Therefore, for the reasons described above, the Court finds that the term is not indefinite and should be construed according to its plain-and-ordinary meaning.

### I. Term #13: "a relatively low input impedance path" / "a relatively low impedance load"

| Term | Plaintiff's Proposed Construction | Defendants' Proposed Construction |
|---|---|---|
| #13: "a relatively low input impedance path" / "a relatively low impedance load"<br><br>U.S. Patent No. 6,266,518, Claims 10, 13<br><br>Proposed by Defendants | Plain-and-ordinary meaning | Indefinite |

**<u>The Parties' Positions:</u>**

Defendants contend that this term is indefinite because the specification does not provide any objective boundaries as to the meaning of this term. Opening at 24. Defendants contend that, at best, the specification describes "relatively low impedance" and "low impedance" "exactly the same way." *Id.* Defendants contend that this "just shifts the uncertainty." *Id.* (quoting *Semcon*, No. 2:16-cv-00437-JRG-RSP, 2017 WL 2972193, at *25).

Defendants additionally contend that the term is indefinite because "impedance path" is not a term of art and the specification provides no guidance as to the meaning of this term. *Id.*

In its Response, with respect to "**a relatively low impedance load**," Plaintiff contends that the specification "provides guidance and a standard against which to measure 'relatively low': the 'relatively low impedance load' must be low enough to allow a path for discharge of 'nonnegligible

amounts of energy' from a storage capacitor." Response at 26. More specifically, Plaintiff contends that the specification describes the effect of lowering the load impedance in a sample-and-hold system depicted in Figure 78A. *Id.* at 26–27 (citing '518 Patent at 64:5–54). Plaintiff contends that unlike when using a high load impedance, a low load impedance "causes the capacitor to discharge the stored energy between the pulses of the energy transfer signal (i.e., when the switch is open)." *Id.* at 27. Plaintiff contends that Figure 79E depicts the voltage at node 7816 when a high load impedance is used while Figure 80D depicts the voltage at node 7816 when a low load impedance is used. *Id.* Plaintiff contends that the difference in the two waveforms in that when the low load impedance is used, the steps are no longer flat in Figure 80D, as they were in Figure 79E, but have a "discernible droop." *Id.*

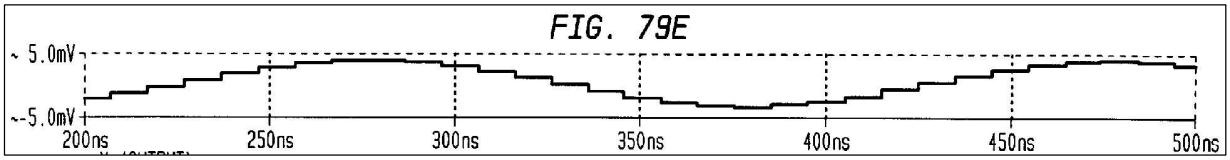


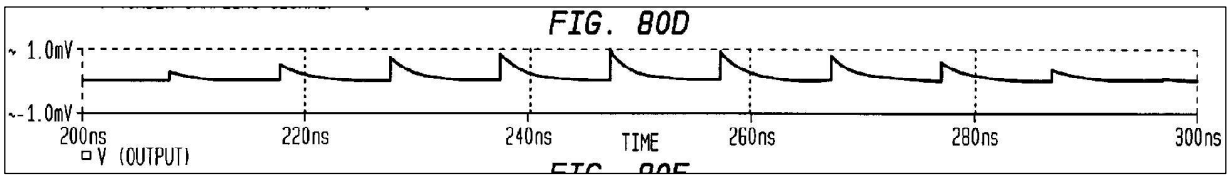


With respect to "**relatively low input impedance path**," Plaintiff contends that when the switch is open, the input impedance approaches infinity, but when the switch is closed, the input impedance is much lower (*i.e.*, not infinity). *Id.* at 28. Plaintiff contends that by increasing the pulse width of the control signal, the switch is closed for a higher percentage of the duty cycle, which reduces the average input impedance. *Id.* Based on that, Plaintiff contends that "[t]his is the way in which the carrier signal is received through a relatively low input impedance path." *Id.*

In its Reply, Defendants contend that Plaintiff "never rebuts the fact that the '518 patent describes 'low impedance load' and 'relatively low impedance load' the same way without

providing any guidance about objective boundaries between these two terms." Reply at 14. Defendants contend that Plaintiff "acknowledges that patent uses other terms of degree to define 'relatively low impedance load'," but that "only moves the uncertainty." *Id.*

Defendants contend that Plaintiff does not dispute that "relatively low input impedance path" has no ordinary meaning in the art. *Id.* Defendants contend that Plaintiff's citation of the specification that recites "the input impedance of the system is reduced" does not provide objective meaning as it also merely shifts the uncertainty. *Id.*

In its Sur-Reply, Plaintiff contends that Defendants' attempt to draw a distinction between "relatively low impedance load" and "low impedance load" is a "red herring" as the specification uses them interchangeably. Sur-Reply at 11 (citing '518 Patent at 64:8–12, 66:58–61).

With respect to "relatively low impedance load," Plaintiff contends that the specification describes that term as a load that is significant relative to the output drive impedance of the system for a given frequency. *Id.* at 12 (citing '518 Patent at 64:8–12, 66:58–61). Plaintiff contends that the specification provides numerical examples of what a high impedance load is (1MΩ) and what a load impedance load is (2KΩ). *Id.* (citing '518 Patent at Figs. 78B, 82B). Plaintiff contends that "[f]rom these figures and values, a POSITA would understand the load values to use that would constitute a 'relatively low' impedance load[.]" *Id.*

With respect to "relatively low input impedance path," Plaintiff contends that the specification describes that "the input impedance is generally defined by the duty cycle of the switch module, and the impedance of the storage module." *Id.* (citing '518 Patent at 104:51–55). Plaintiff contends that the specification explains "how controlling the pulse widths of the control signal, in conjunction with the aliasing rate, varies input impedance." *Id.* (citing '518 Patent at

106:65–107:12). Plaintiff contends that the specification "informs a POSITA that widening pulse widths will lower the input impedance of the system." *Id.* at 12–13.

**The Court's Analysis:**

After reviewing the parties' arguments and considering the applicable law, the Court agrees with Plaintiff that neither "a relatively low input impedance path" or "a relatively low impedance load" are indefinite. With respect to "a relatively low input impedance path," the Court agrees with Plaintiff that the specification provides guidance to a POSITA by describing that widening the control pulses from negligible apertures (which tend toward zero) to non-negligible apertures (which tend away from zero) decreases how often the switch is open, and thus decreases how often the impedance approaches infinity. In that situation, the average input impedance is relatively low.

With respect to "a relatively low impedance path," the Court agrees with Plaintiff that the specification provides guidance as to the scope of this term. More specifically, the specification describes that a "relatively low impedance load" is "one that is significant relative to the output drive impedance of the system for a given output frequency." '518 Patent at 64:10–12. (Conversely, the specification describes that a "relatively high impedance load" is "one that is relatively insignificant to the output drive impedance of the system for a given output frequency." '518 Patent at 63:21-23.) Furthermore, the specification provides numerical examples of what a high impedance load is and what a load impedance load is. '518 Patent at Figs. 78B (high impedance load of 1MΩ), 82B (low impedance load of 2KΩ)).

Finally, the Court agrees with Plaintiff that the specification describes "relatively low impedance load" and "low impedance load" in the same manner. More specifically, the specification describes the former as "one that is significant relative to the output drive impedance

of the system for a given output frequency." *Id.* at 64:10–12. The specification also describes the latter in the same way, namely, a load "that is relatively significant" as compared to the output drive impedance of the system for a given output frequency. *Id.* at 66:58–61. Therefore, based on these passages, the Court concludes that the patentee appeared to use "relatively low impedance load" and "low impedance load" synonymously.

For these reasons, the Court concludes that Defendants have not provided clear and convincing evidence that this term is indefinite.

***Construction***: Because the "heavy presumption" is that terms should be construed according to their plain-and-ordinary meaning and because Defendants does not allege lexicography or disclaimer, which are the only two exceptions to the general rule that a term should be construed as having its plain-and-ordinary meaning, the Court concludes that the term should be construed as having its plain-and-ordinary meaning. *Azure Networks*, 771 F.3d at 1347; *Thorner*, 669 F.3d at 1365.

Therefore, for the reasons described above, the Court finds that the term is not indefinite and should be construed according to its plain-and-ordinary meaning.

**J. Term #14: "a relatively efficient power transfer path"**

| Term | Plaintiff's Proposed Construction | Defendants' Proposed Construction |
|---|---|---|
| #14: "a relatively efficient power transfer path"<br><br>U.S. Patent No. 6,266,518, Claims 11, 14<br><br>Proposed by Defendants | Plain-and-ordinary meaning | Indefinite |

**The Parties' Positions:**

Defendants contend that this term is indefinite for the same reasons that they provided for why Term #13 is indefinite. Opening at 25. Defendants further contend that the specification does not provide objective guidance for these terms as it does not discuss "power transfer path" or a "relatively efficient power transfer path" outside of the claims. *Id.*

In its Response, Plaintiff contends that the specification describes that "in order to optimize power transfer through a receiver system, each component should be impedance matched with adjacent components," and that "a relatively efficient power transfer path is a path in which adjacent components are impedance matched." Response at 29 (citing '518 Patent at 24:9–11).

In its Reply, Defendants contend that Plaintiff concedes that this term does not appear in the specification outside of the claims. Reply at 14. Defendants further contend that Plaintiff's impedance matching argument is unsupported attorney argument. *Id.* Defendants further contend that Plaintiff's argument is incorrect because "impedance matching results in maximized power transfer, not merely "relatively efficient power transfer[.]" *Id.* at 14–15 (internal citations omitted).

In its Sur-Reply, Plaintiff contends that Defendants' Reply brief does not raise any new issues. Sur-Reply at 15.

**The Court's Analysis:**

After reviewing the parties' arguments and considering the applicable law, the Court agrees with Defendants that the term is indefinite. The Court agrees with Defendants that impedance matching maximizes the power transfer. While maximizing the power transfer certainly would fall within the scope of "relatively efficient power transfer," Plaintiff does not offer an explanation nor point any other passages in the specification that would indicate where the boundary is between

"relatively efficient power transfer" and not "relatively efficient power transfer." As such, the Court concludes that a POSITA would not understand with reasonable certainty the scope of this claim term, which renders it indefinite.

### K. Term #15: "wherein said frequency of said down-converted image is substantially equal to zero"

| Term | Plaintiff's Proposed Construction | Defendants' Proposed Construction |
|---|---|---|
| #15: "wherein said frequency of said down-converted image is substantially equal to zero"<br><br>U.S. Patent No. 6,049,706, Claim 84<br><br>Proposed by Defendants | Plain-and-ordinary meaning | Indefinite |

**<u>The Parties' Positions:</u>**

Defendants contend that while the specification makes references to "zero intermediate frequency" ("zero IF"), those references "fail to give any guidance about what constitutes a down-converted image frequency that is and is not 'substantially equal to zero.'" Opening at 25. More specifically, Defendants contend that the '706 patent does not provide any guidance to a POSITA "how to determine whether a frequency of a down-converted signal is 'substantially equal to zero,' as opposed to zero itself, including by failing to provide any examples of when such a frequency is no longer 'substantially equal to zero.'" *Id.* at 26.

In its Response, Plaintiff contends that the patentee used the word "substantially" to account for the fact that in cellular/wireless systems, signals are not perfect so a frequency may not be exactly zero. Response at 29–30. Plaintiff contends that the Federal Circuit has held that

"substantially" does not require a strict numerical boundary. *Id.* at 30. (citing cases). Plaintiff contends that in this case "substantially" means "approximately." *Id.*

In its Reply, Defendants contend that the general proposition that "substantially" does not require a strict numerical boundary is "irrelevant" and that Plaintiff's assertion that signals are not perfect is "beside the point" as the specification provides no guidance about what constitutes a down-converted image frequency that is and is not "substantially equal to zero." Reply at 15.

In its Sur-Reply, Plaintiff contends that '706 Patent relates to cellular/wireless systems and that a POSITA would understand that signals for those system are not perfect. Sur-Reply at 14. Plaintiff further contends that the specification describes that the "down-converted image" can be "a baseband signal with zero intermediate frequency (IF), and further informs a POSITA how to accomplish down-conversion to zero IF." *Id.* at 15 (citing '706 Patent at 30:51–55, 30:64–31:5, 31:13–32). Based on that, Plaintiff contends that a POSITA would understand that "substantially equal to zero" is "an approximation and the frequency of the down-converted image may not be exactly zero." *Id.*

**<u>The Court's Analysis:</u>**

After reviewing the parties' arguments and considering the applicable law, the Court agrees with Plaintiff that the term is not indefinite. More specifically, the Court agrees with Plaintiff that the outputs of cellular/wireless systems are not necessarily precise enough to achieve a zero IF, even if designed to do so. One reason is that the underlying electrical components, *e.g.*, resistors and capacitors, have tolerances, *e.g.*, ±10%. *See, e.g.*, *Practical Resistors: Manufacturing Tolerances, Common Values, and Color Codes*, ULTIMATE ELECTRONICS, https://ultimateelectronicsbook.com/resistor-tolerances-values-color-codes/, *Capacitor Codes:*

*Capacitor Markings and Tolerance Code Chart*, ARROW, https://www.arrow.com/en/research-and-events/articles/guide-to-capacitor-codes-and-tolerance-code-chart; *see also* Response, Ex. 7 at ¶ 6. While components with tighter tolerances may be available, they also may have a higher cost. *Practical Resistors: Manufacturing Tolerances, Common Values, and Color Codes*, ULTIMATE ELECTRONICS, https://ultimateelectronicsbook.com/resistor-tolerances-values-color-codes/. Therefore, even when designers attempt to design for a specific goal, *e.g.*, a zero IF, due to differences in the values of electronic components, a POSITA would understand "substantially equal to zero" is an approximation such that the frequency may not be exactly zero.

For these reasons, the Court concludes that Defendants have not provided clear and convincing evidence that this term is indefinite.

***Construction***: Because the "heavy presumption" is that terms should be construed according to their plain-and-ordinary meaning and because Defendants does not allege lexicography or disclaimer, which are the only two exceptions to the general rule that a term should be construed as having its plain-and-ordinary meaning, the Court concludes that the term should be construed as having its plain-and-ordinary meaning. *Azure Networks*, 771 F.3d at 1347; *Thorner*, 669 F.3d at 1365.

Therefore, for the reasons described above, the Court finds that the term is not indefinite and should be construed according to its plain-and-ordinary meaning.

### L. Term #16: "a substantially impedance matched input path"

| Term | Plaintiff's Proposed Construction | Defendants' Proposed Construction |
|---|---|---|
| #16: "a substantially impedance matched input path"<br><br>U.S. Patent No. 6,266,518, Claims 12, 15<br><br>Proposed by Defendants | Plain-and-ordinary meaning | Indefinite |

**<u>The Parties' Positions:</u>**

Defendants contend that the specification "never mentions 'substantial' impedance matching outside of the claims, including by providing no examples of 'substantial' impedance matching." Opening at 27. Defendants contend that, by contrast, the specification "teaches that impedance 'mismatches' are a drawback to be avoided and that to maximize power, components 'should be impedance matched[.]'" *Id.* Defendants contend that "several claims recite 'impedance matching' a signal, further suggesting 'impedance matching' and 'substantial[] impedance match[ing]' have separate and distinct meanings." *Id.* at 27–28.

In its Response, Plaintiff contends that this term is not indefinite for the same reasons that it provided for why Term #15 is not indefinite. Response at 30.

In its Reply, Defendants contend that this term is indefinite for the same reasons that they provided for why Term #15 is indefinite. Reply at 15.

In its Sur-Reply, Plaintiff contends that Defendants' Reply brief does not raise any new issues. Sur-Reply at 15.

**The Court's Analysis:**

After reviewing the parties' arguments and considering the applicable law, the Court agrees with Plaintiff that the term is not indefinite and should be construed according to its plain-and-ordinary meaning for the same reasons that the Court explained in connection with Term #16. Furthermore, with respect to Defendants' argument that some claims use "impedance matching" while others use "substantially impedance matched," the Court concludes that this fact does not help Defendants carry their clear and convincing burden necessary for indefiniteness as the scope of the former claims could be construed to be limited to exact impedance matching while the latter allows for approximate impedance matching.

## IV. CONCLUSION

In conclusion, for the reasons described herein, the Court adopts the below constructions as its final constructions.

**SIGNED** this 29th day of April, 2024.

ALAN D ALBRIGHT
UNITED STATES DISTRICT JUDGE

| Term | Plaintiff's Proposed Construction | Defendants' Proposed Construction | Court's Final Construction |
|---|---|---|---|
| #1: "energy storage element" / "storage element" / "storage device" / "storage module"<br><br>U.S. Patent No. 7,292,835, Claims 1, 3, 4, 18, 20; U.S. Patent No. 6,266,518, Claim 16; U.S. Patent No. 8,660,513, Claim 19<br><br>Proposed by Both Sides | Energy storage element / storage element: "an element of an energy transfer system that stores non-negligible amounts of energy from an input electromagnetic signal"<br><br>Storage device: "a device of an energy transfer system that stores non-negligible amounts of energy from an input electromagnetic signal"<br><br>Storage module: "a module of an energy transfer system that stores non-negligible amounts of energy from an input electromagnetic signal" | "a [device / module / element] that stores non-negligible amounts of energy from an input electromagnetic signal" | "an element of a system that stores non-negligible amounts of energy from an input EM signal." |
| #2: "switch"<br><br>U.S. Patent No. 6,049,706, Claims 86, 87, 88, 91, 93; U.S. Patent No. 7,292,835, Claims 18, 19, 20; U.S. Patent No. 8,660,513, Claim 19<br><br>Proposed by Plaintiff | Plain-and-ordinary meaning wherein the plain-and-ordinary meaning is "an electronic device for opening and closing a circuit as dictated by an independent control input" | "an electronic device for opening and closing a circuit" | Plain-and-ordinary meaning wherein the plain-and-ordinary meaning is "an electronic device for opening and closing a circuit as dictated by an independent control input" |

| Term | Plaintiff's Proposed Construction | Defendants' Proposed Construction | Court's Final Construction |
|---|---|---|---|
| #3: "harmonic" / "harmonics"<br><br>U.S. Patent No. 6,049,706, Claims 8, 19; ; U.S. Patent No. 6,266,518, Claims 1, 2<br><br>Proposed by Both Sides | Harmonic: "A sinusoidal component of a periodic wave that has a frequency that is an integer multiple of the fundamental frequency of the periodic waveform and including the fundamental frequency as the first harmonic"<br><br>Harmonics: "A frequency or tone that, when compared to its fundamental or reference frequency or tone, is an integer multiple of it and including the fundamental frequency as the first harmonic" | Harmonic: "A sinusoidal component of a periodic wave that has a frequency that is an integer multiple of the fundamental frequency of the periodic wave"<br><br>Harmonics: "Sinusoidal components of a periodic wave each of which have a frequency that is an integer multiple of the fundamental frequency of the periodic wave" | Plain-and-ordinary meanings:<br>● Harmonic: "A sinusoidal component of a periodic wave that has a frequency that is an integer multiple of the fundamental frequency of the periodic waveform and including the fundamental frequency as the first harmonic"<br>● Harmonics: "A frequency or tone that, when compared to its fundamental or reference frequency or tone, is an integer multiple of it and including the fundamental frequency as the first harmonic" |
| #4: "under-sampling"<br><br>U.S. Patent No. 6,049,706, Claims 8, 9, 19<br><br>Proposed by Plaintiff | "sampling at an aliasing rate" or "sampling at less than or equal to twice the frequency of the input signal" | "sampling at less than or equal to twice the frequency of the input signal" | "sampling at an aliasing rate" or "sampling at less than or equal to twice the frequency of the input signal" |

| Term | Plaintiff's Proposed Construction | Defendants' Proposed Construction | Court's Final Construction |
|---|---|---|---|
| #5: "A cable modem for down-converting an electromagnetic signal having complex modulations"<br><br>U.S. Patent No. 7,292,835, Claim 1<br><br>Proposed by Both Sides | The preamble is limiting. | Only the portion of the preamble reciting "an electromagnetic signal having complex modulations" is limiting." | Only the portion of the preamble reciting "an electromagnetic signal having complex modulations" is limiting. |
| #6: "delaying said down-converted input samples"<br><br>U.S. Patent No. 6,049,706, Claim 8<br><br>Proposed by Defendant | Plain-and-ordinary meaning | "holding said down-converted samples" | Plain-and-ordinary meaning. |
| #7: "in an integrated manner"<br><br>U.S. Patent No. 6,049,706, Claim 19<br><br>Proposed by Defendants | Plain-and-ordinary meaning | "in a single, unified manner" | Plain-and-ordinary meaning. |

| Term | Plaintiff's Proposed Construction | Defendants' Proposed Construction | Court's Final Construction |
|---|---|---|---|
| #8: "wherein step (2) is at least partially integral with step (1)"<br><br>U.S. Patent No. 6,049,706, Claim 17<br><br>Proposed by Defendants | Plain-and-ordinary meaning | Indefinite | Not indefinite. Plain-and-ordinary meaning. |
| #9: "pulse widths that are established to improve energy transfer from said input signal to said down-converted image"<br><br>U.S. Patent No. 6,049,706, Claim 18<br><br>Proposed by Defendants | Plain-and-ordinary meaning | Indefinite | Not indefinite. Plain-and-ordinary meaning. |
| #10: "wherein said down-converting operation is performed so as to improve energy transfer from said input signal to a down-converted image"<br><br>U.S. Patent No. 6,049,706, Claim 26<br><br>Proposed by Defendants | Plain-and-ordinary meaning | Indefinite | Not indefinite. Plain-and-ordinary meaning. |

| Term | Plaintiff's Proposed Construction | Defendants' Proposed Construction | Court's Final Construction |
|---|---|---|---|
| #11: "tend away from zero time in duration" / "tends away from zero time in duration"<br><br>U.S. Patent No. 6,266,518, Claim 3; U.S. Patent No. 6,049,706, Claims 88, 91, 96<br><br>Proposed by Defendants | Plain-and-ordinary meaning | Indefinite. | Not indefinite. Plain-and-ordinary meaning. |
| #12: "to extend the time that said switch is closed for a purpose of increasing energy transferred from said input signal"<br><br>U.S. Patent No. 6,049,706, Claims 88, 91, 96<br><br>Proposed by Defendants | Plain-and-ordinary meaning | Indefinite | Not indefinite. Plain-and-ordinary meaning. |
| #13: "a relatively low input impedance path" / "a relatively low impedance load"<br><br>U.S. Patent No. 6,266,518, Claims 10, 13<br><br>Proposed by Defendants | Plain-and-ordinary meaning | Indefinite | Not indefinite. Plain-and-ordinary meaning. |

| Term | Plaintiff's Proposed Construction | Defendants' Proposed Construction | Court's Final Construction |
|---|---|---|---|
| #14: "a relatively efficient power transfer path"<br><br>U.S. Patent No. 6,266,518, Claims 11, 14<br><br>Proposed by Defendants | Plain-and-ordinary meaning | Indefinite | Indefinite. |
| #15: "wherein said frequency of said down-converted image is substantially equal to zero"<br><br>U.S. Patent No. 6,049,706, Claim 84<br><br>Proposed by Defendants | Plain-and-ordinary meaning | Indefinite | Not indefinite. Plain-and-ordinary meaning. |
| #16: "a substantially impedance matched input path"<br><br>U.S. Patent No. 6,266,518, Claims 12, 15<br><br>Proposed by Defendants | Plain-and-ordinary meaning | Indefinite | Not indefinite. Plain-and-ordinary meaning. |