US 20190053294A1

(19) United States

(12) Patent Application Publication

(10) Pub. No.: US 2019/0053294 A1

(43) Pub. Date: Feb. 14, 2019

Xia et al.

(54) **BEAM FAILURE RECOVERY REQUEST**

(71) Applicant: **Futurewei Technologies, Inc.**, Plano, TX (US)

(72) Inventors: **Pengfei Xia**, San Diego, CA (US); **Young Hoon Kwon**, San Diego, CA (US); **Bin Liu**, San Diego, CA (US)

(73) Assignee: **Futurewei Technologies, Inc.**, Plano, TX (US)

(21) Appl. No.: **15/814,372**

(22) Filed: **Nov. 15, 2017**

Related U.S. Application Data

(60) Provisional application No. 62/543,765, filed on Aug. 10, 2017.

Publication Classification

(51) **Int. Cl.**

H04W 76/02	(2006.01)
H04W 76/04	(2006.01)
H04W 72/12	(2006.01)
H04W 74/08	(2006.01)

(52) **U.S. Cl.**

CPC ***H04W 76/028*** (2013.01); ***H04W 76/046*** (2013.01); *H04W 72/0433* (2013.01); ***H04W 74/0833*** (2013.01); ***H04W 72/1289*** (2013.01)

(57) **ABSTRACT**

The disclosure relates to technology for beam failure recovery in user equipment, comprising detecting a beam failure event between the user equipment and a base station, sending a first beam failure recovery request (BFRQ) to the base station upon detection of the beam failure and searching for a beam failure recovery response (BFRP) within a first response window.

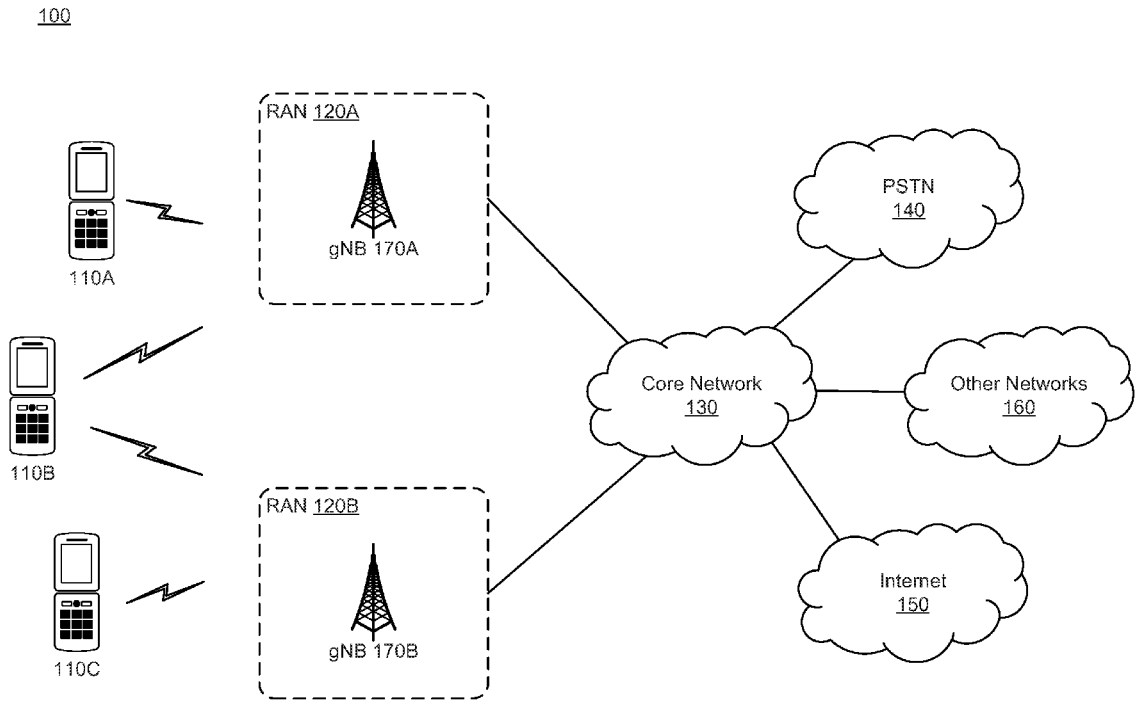

APPLE 1004

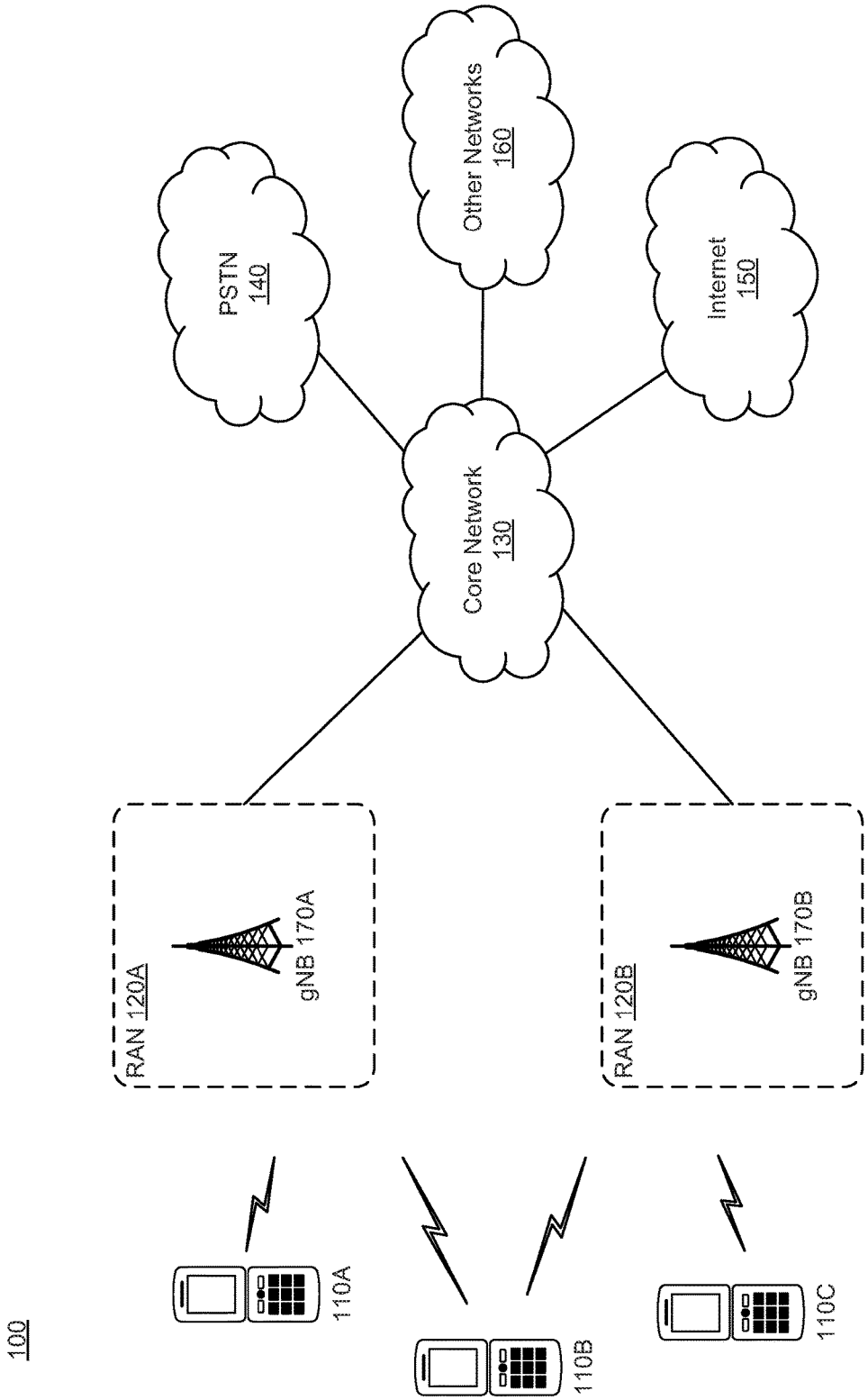
100
PSTN
140
Other Networks
160
Internet
150
Core Network
130
RAN 120A
gNB 170A
RAN 120B
gNB 170B
110A
110B
110C

FIG. 1

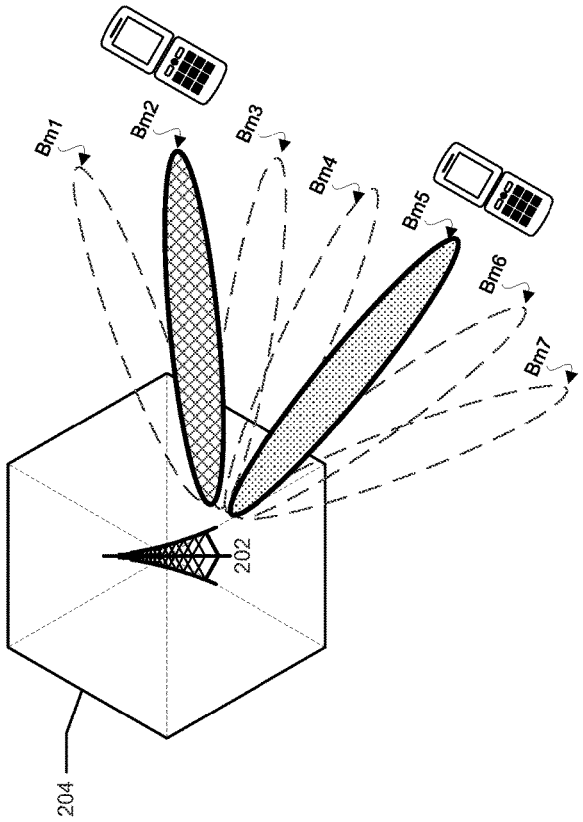
Bm1
Bm2
Bm3
Bm4
Bm5
Bm6
Bm7
202
204

FIG. 2

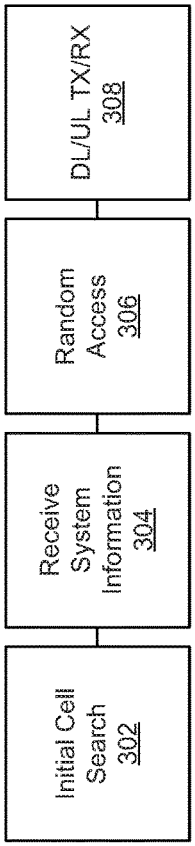
Initial Cell Search 302
Receive System Information 304
Random Access 306
DL/UL TX/RX 308

FIG. 3

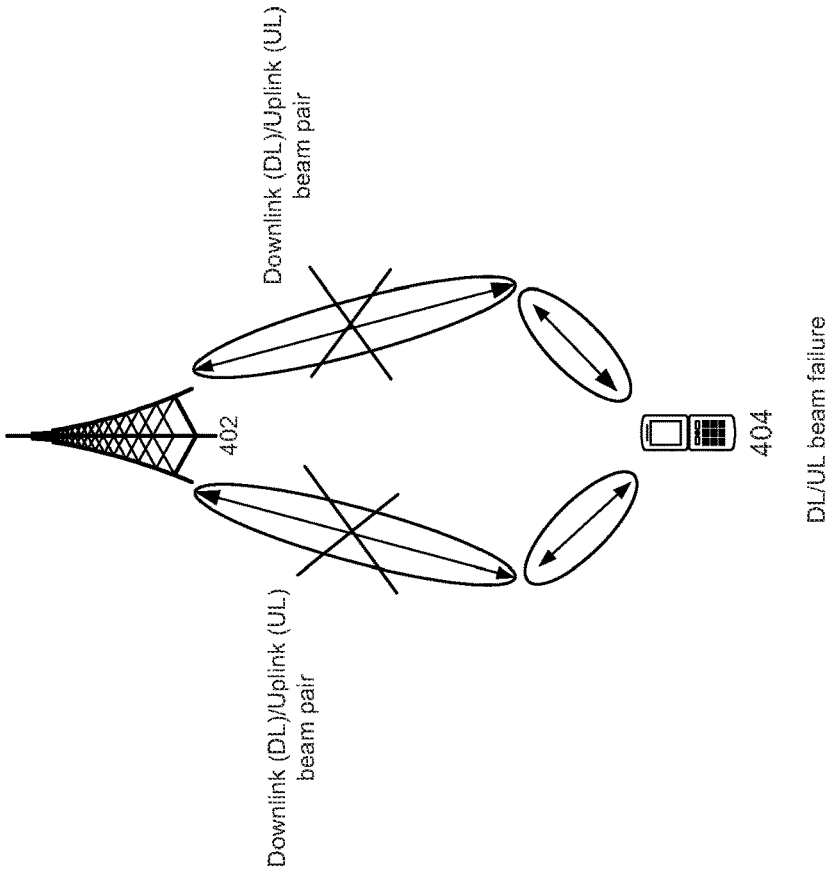
Downlink (DL)/Uplink (UL) beam pair
402
404
Downlink (DL)/Uplink (UL) beam pair
DL/UL beam failure

FIG. 4B

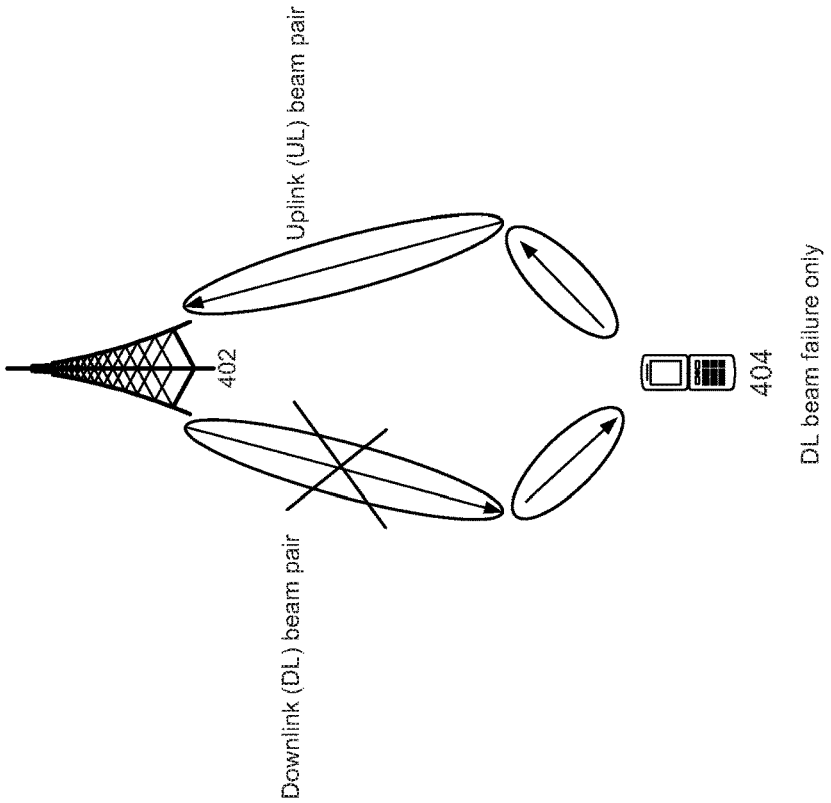
Uplink (UL) beam pair
402
404
Downlink (DL) beam pair
DL beam failure only

FIG. 4A

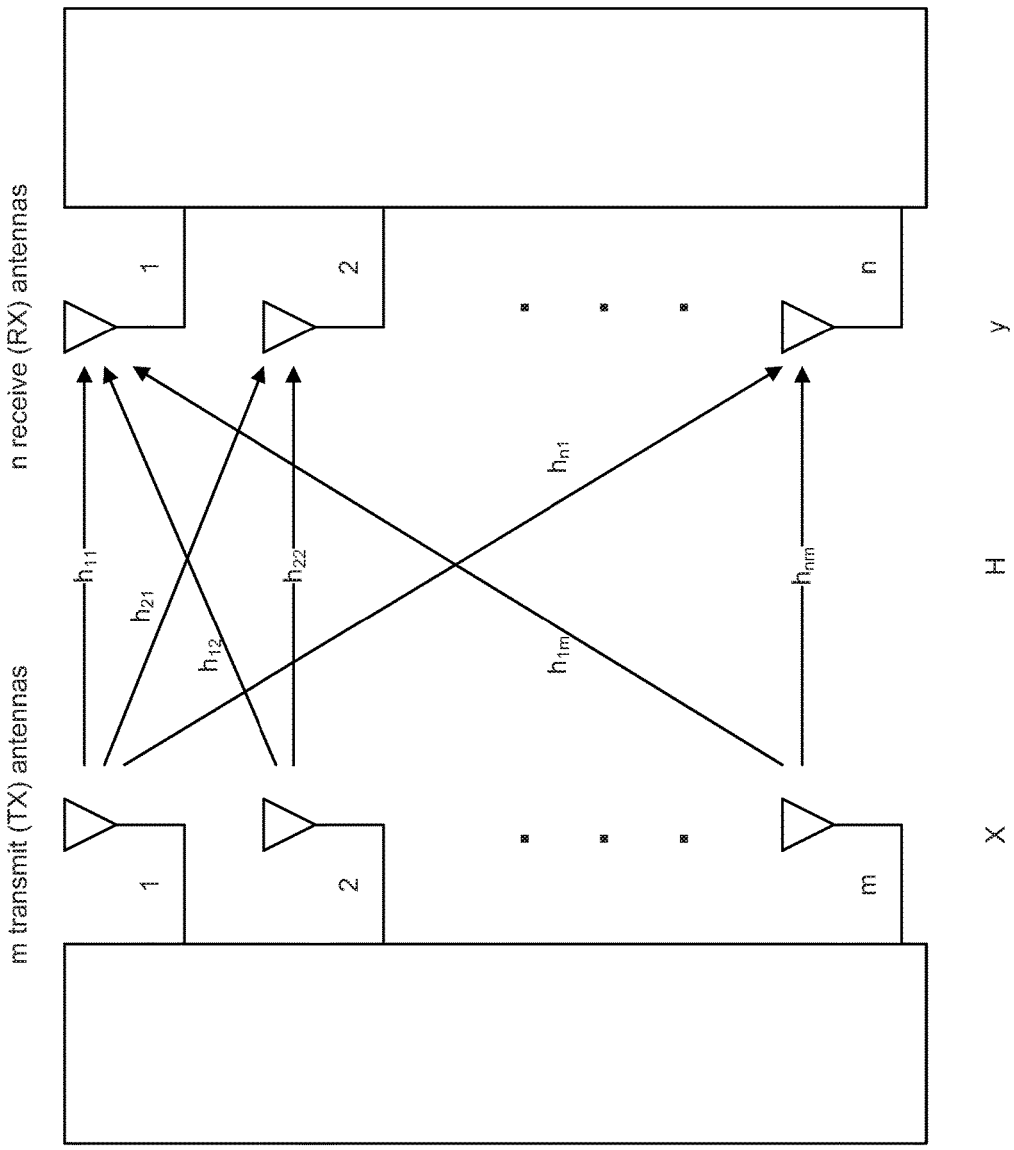
m transmit (TX) antennas
n receive (RX) antennas
1
2
m
1
2
n
h_{11}
h_{21}
h_{12}
h_{22}
h_{1m}
h_{n1}
h_{nm}
X
H
y

FIG. 4C

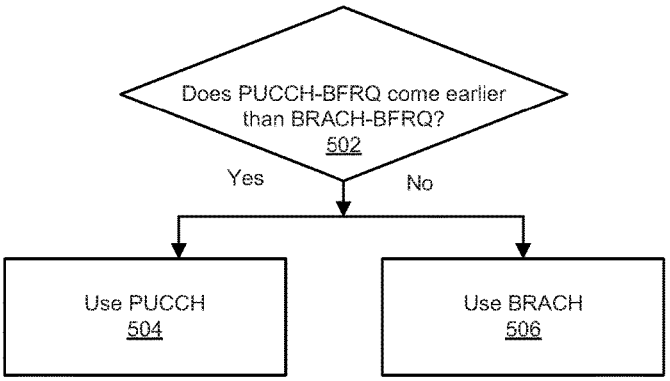

FIG. 5A

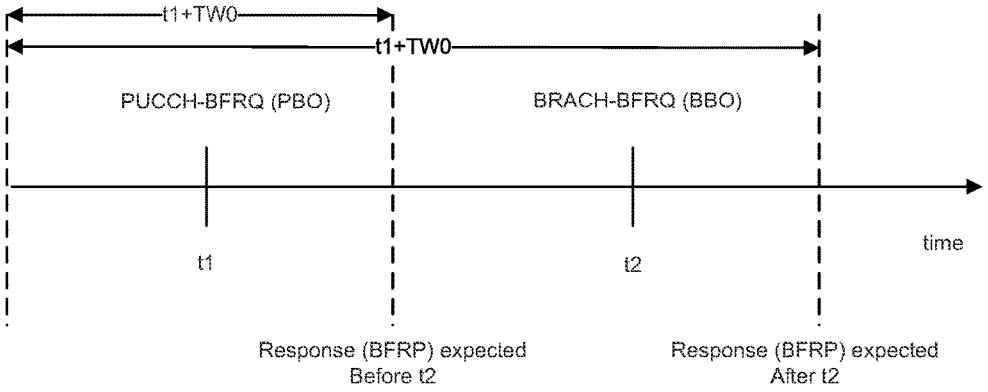

FIG. 5B

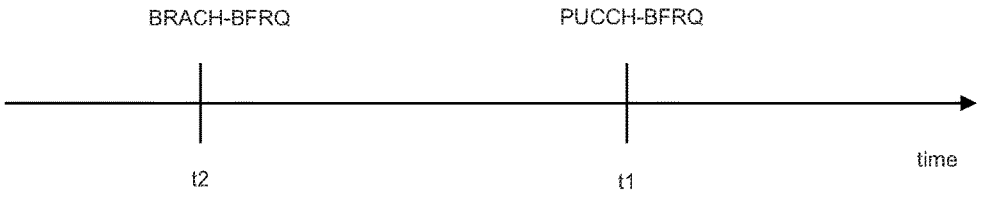

FIG. 5C

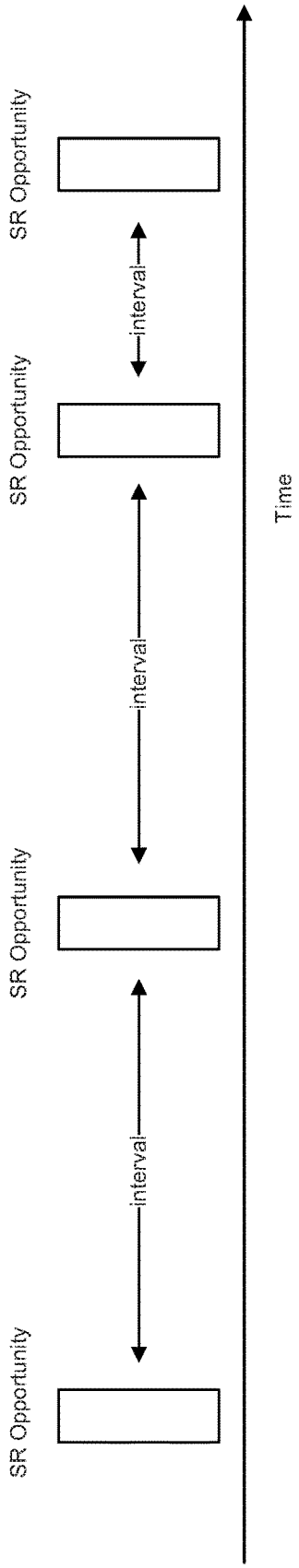
SR Opportunity
interval
SR Opportunity
interval
SR Opportunity
interval
SR Opportunity
Time

FIG. 5D

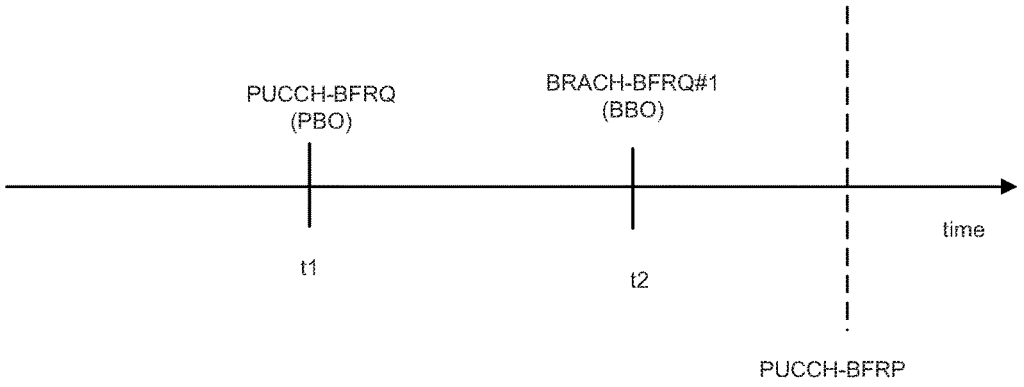
PUCCH-BFRQ
(PBO)
BRACH-BFRQ#1
(BBO)
time
t1
t2
PUCCH-BFRP

FIG. 6A

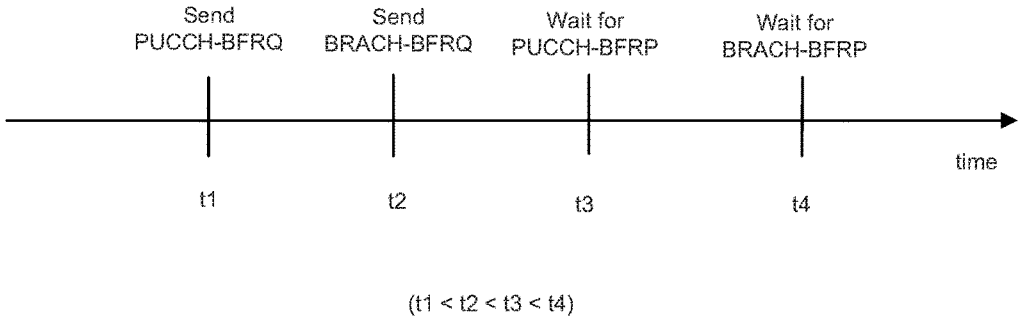
Send
PUCCH-BFRQ
Send
BRACH-BFRQ
Wait for
PUCCH-BFRP
Wait for
BRACH-BFRP
time
t1
t2
t3
t4
(t1 < t2 < t3 < t4)

FIG. 6B

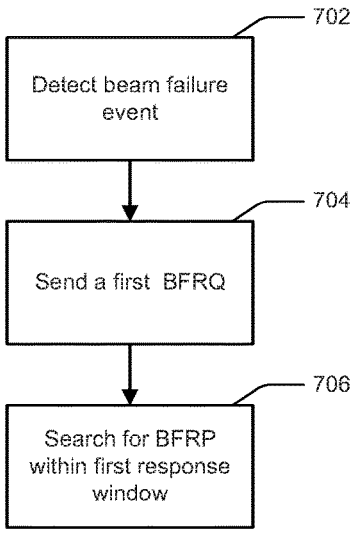
702
Detect beam failure event
704
Send a first BFRQ
706
Search for BFRP within first response window

FIG. 7A

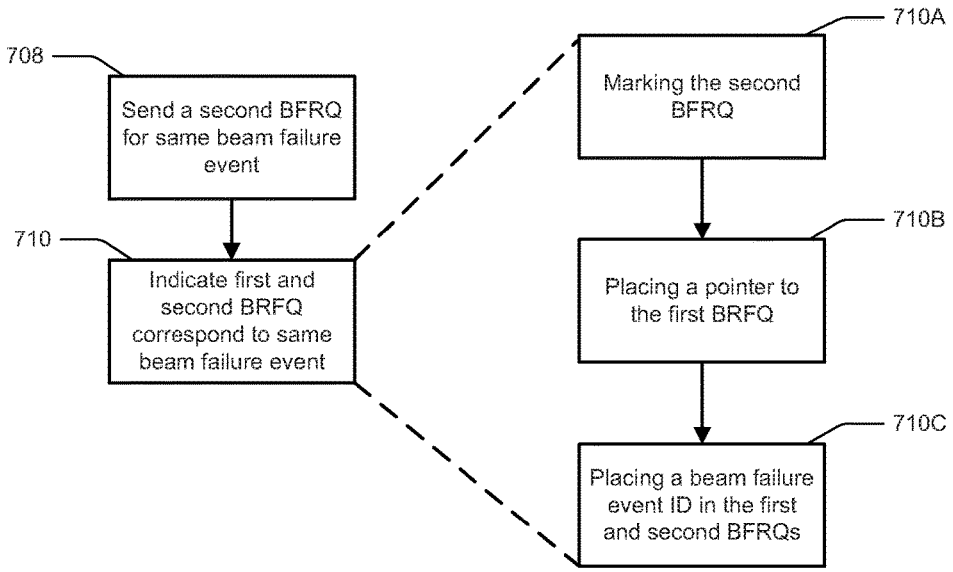
708
Send a second BFRQ for same beam failure event
710
Indicate first and second BRFQ correspond to same beam failure event
710A
Marking the second BFRQ
710B
Placing a pointer to the first BRFQ
710C
Placing a beam failure event ID in the first and second BFRQs

FIG. 7B

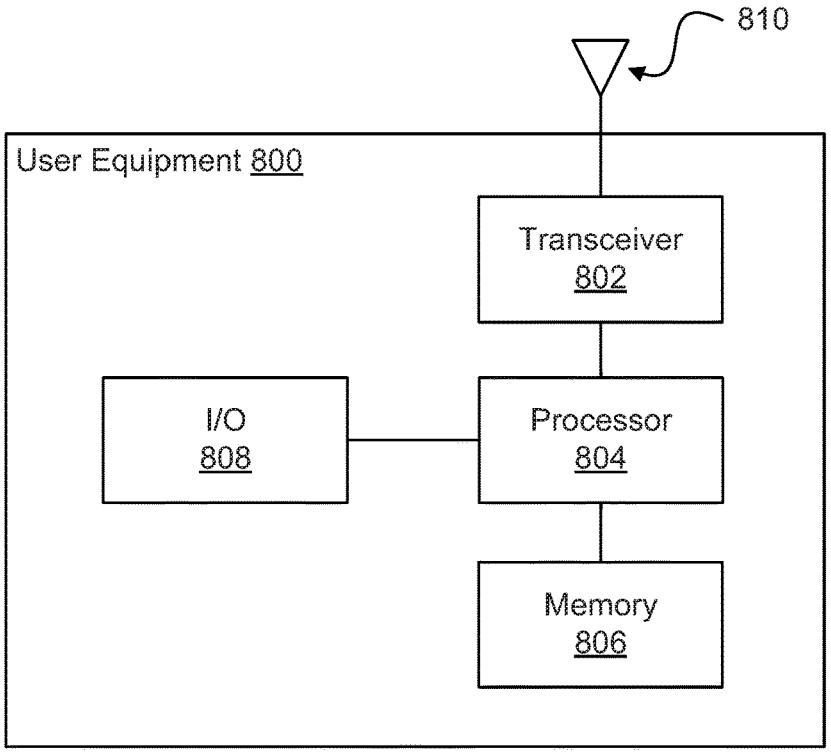
810
User Equipment 800
Transceiver
802
I/O
808
Processor
804
Memory
806

FIG. 8A

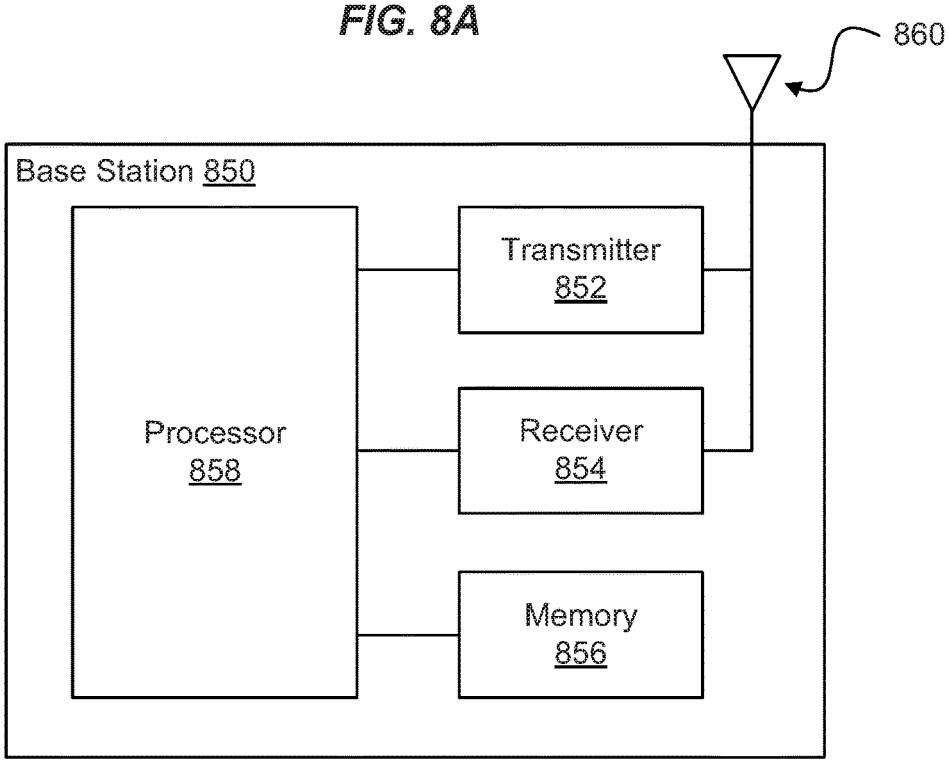
860
Base Station 850
Processor
858
Transmitter
852
Receiver
854
Memory
856

FIG. 8B

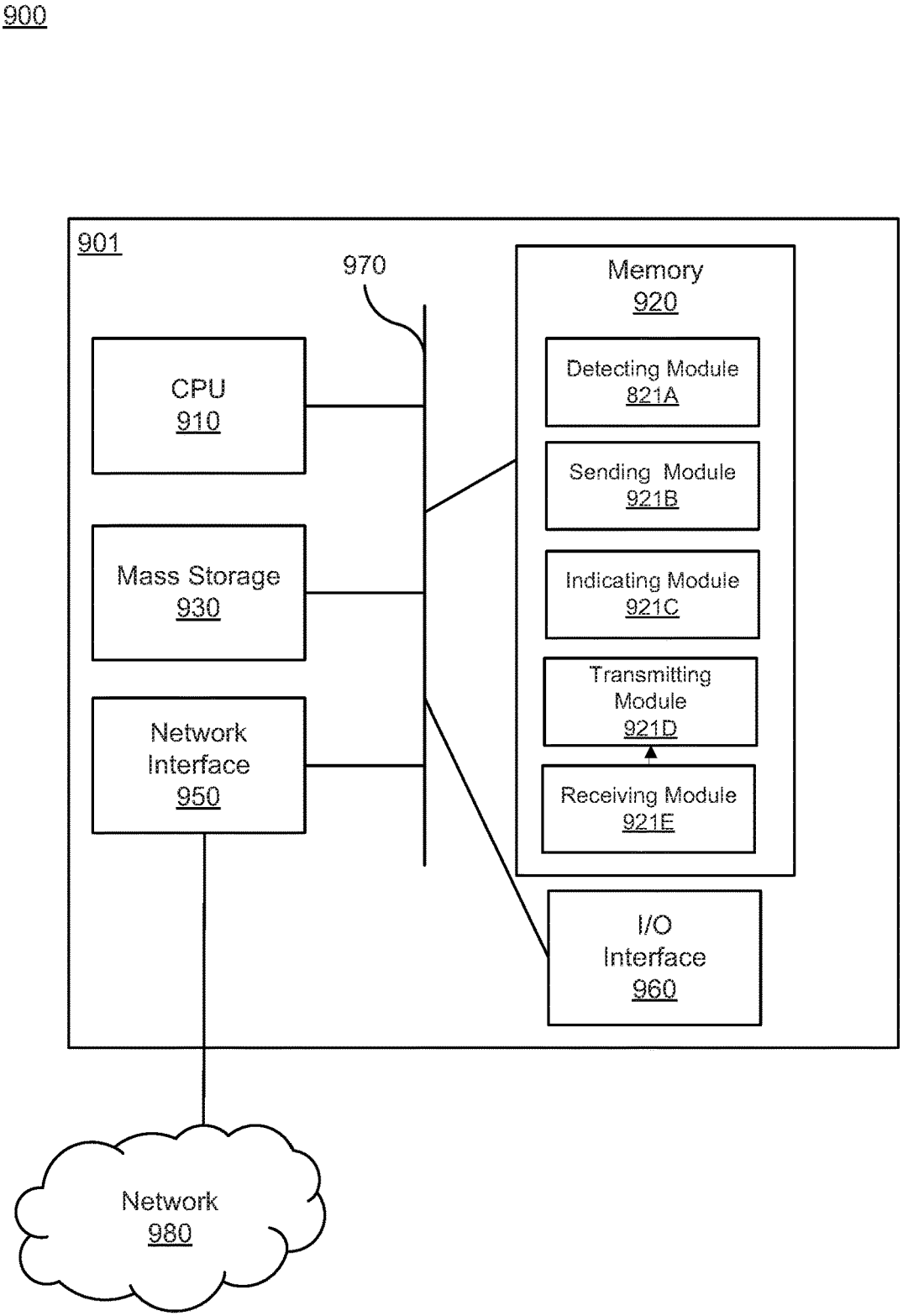
900
901
970
Memory
920
CPU
910
Detecting Module
821A
Sending Module
921B
Mass Storage
930
Indicating Module
921C
Transmitting Module
921D
Network Interface
950
Receiving Module
921E
I/O Interface
960
Network
980

FIG. 9

BEAM FAILURE RECOVERY REQUEST

CLAIM FOR PRIORITY

[0001] This application claims the benefit of priority to U.S. Provisional Application No. 62/543,765, filed Aug. 10, 2017, the entire contents of which are hereby incorporated by reference.

FIELD

[0002] The disclosure generally relates to wireless communication networks, and in particular, to recovering from a beam failure between user equipment and a base station.

BACKGROUND

[0003] As the demand for capacity in mobile broadband communications increases drastically every year, wireless communication systems are increasing their capability of handling mobile traffic. In next generation systems, such as fifth generation (5G) technologies, advanced communications, such as millimeter-wave (mm-wave) communications, with potential multigigabit-per-second data rates are candidate technologies to increase overall capacity and transmission speeds. Highly directional beamforming antennas are necessary at both the base station (BS) and mobile station (MS) to compensate for the high attenuation in the mm-wave frequency band and to extend its transmission range.

[0004] A misalignment between transmitting (TX) and receiving (RX) beams may cause a significant loss in the received power, especially for systems with narrow beams, and result in beam failure. To avoid such beam failure, beam alignment in mm-wave communication systems is necessary to find the best beam pair from all possible beam pairs for maximum beamforming efficiency. However, when a beam failure occurs, a reporting and recovery mechanism is employed to report and recover from the failure. During the 3GPP TSG RAN WG1 #89, it was agreed upon to support a non-contention based channel based on the Physical Random Access Channel (PRACH) and the Physical Uplink Control Channel (PUCCH) for beam failure recovery request transmission. PRACH denotes a Long Term Evolution (LTE) uplink channel transmitted by a terminal so as to establish initial synchronization, whereas PUCCH denotes an LTE uplink control channel, and includes Channel Quality Indicator (CQI) information.

BRIEF SUMMARY

[0005] According to one aspect of the present disclosure, there is a method for beam failure recovery in user equipment, including detecting a beam failure event between the user equipment and a base station; sending a first beam failure recovery request (BFRQ) to the base station upon detection of the beam failure event; and searching for a beam failure recovery response (BFRP) within a first response window.

[0006] Optionally, in any of the preceding aspects, sending the BFRQ is carried out in the physical layer of the user equipment.

[0007] Optionally, in any of the preceding aspects, the first BFRQ is sent using one of a physical uplink channel (PUCCH) or a random access channel for beam failure recovery (PRACH).

[0008] Optionally, in any of the preceding aspects, the first response time window is a PUCCH response window when the BFRQ is sent using the PUCCH, or the first response time window is a beam failure random access channel response window when the BFRQ is sent using the random access channel for beam failure recovery (PRACH).

[0009] Optionally, in any of the preceding aspects, a parameter of the first response time window is at least one of a response window starting position in time, a response window ending position in time or a response window duration in time.

[0010] Optionally, in any of the preceding aspects, a configuration of the response time window is signaled to the user equipment in at least one of a radio resource control (RRC) message or a downlink control information (DCI) message.

[0011] Optionally, in any of the preceding aspects, the first BFRQ is sent using the PUCCH when a PUCCH-BFRQ opportunity arrives before a PRACH-BFRQ opportunity.

[0012] Optionally, in any of the preceding aspects, the first BFRQ is sent using the PUCCH when a PUCCH-BFRQ opportunity arrives after a PRACH-BFRQ opportunity.

[0013] Optionally, in any of the preceding aspects, the PUCCH-BFRQ arrives at a first time and the PRACH-BFRQ arrives at a second time, and the PUCCH-BFRQ is sent at the first time when a PUCCH-BFRQ opportunity response is expected before a PRACH-BFRQ opportunity at the second time, unless a sum of the first time and a response time exceeds the second time.

[0014] Optionally, in any of the preceding aspects, the method further includes sending a second BFRQ to the base station for a same beam failure event; and indicating to the base station that the first and second BFRQs correspond to the same beam failure event.

[0015] Optionally, in any of the preceding aspects, the indicating includes one of marking the second BFRQ as secondary in time or order, placing a pointer to the first BFRQ in the second BFRQ indicating that the first and second BFRQs correspond to the same beam failure event, and placing a beam failure event ID in the first BFRQ and the second BFRQ with the same beam failure event ID.

[0016] Optionally, in any of the preceding aspects, the method further includes receiving first and second beam failure recovery responses (BFRPs) from the base station, wherein the BFRP includes one of a mark in the second BFRP as secondary as secondary in time or order, a pointer in the second BFRP to the first BFRP indicating that the first and second BFRPs correspond to the same beam failure event, and a beam failure event ID in the first and second BFRPs with the same beam failure event ID.

[0017] Optionally, in any of the preceding aspects, the second BFRQ is on a different channel or carrier frequency than the first BFRQ.

[0018] According to another embodiment of the present disclosure, there is a device for beam failure recovery in user equipment, including a non-transitory memory storage comprising instructions; and one or more processors in communication with the memory, wherein the one or more processors execute the instructions to detect a beam failure event between the user equipment and a base station; send a first beam failure recovery request (BFRQ) to the base station upon detection of the beam failure event; and search for a beam failure recovery response (BFRP) within a first response window.

[0019] According to still another aspect of the present disclosure, there is a non-transitory computer-readable

medium storing computer instructions for beam failure recovery in user equipment, that when executed by one or more processors, cause the one or more processors to perform the operations of detecting a beam failure event between the user equipment and a base station; sending a first beam failure recovery request (BFRQ) to the base station upon detection of the beam failure event; and searching for a beam failure recovery response (BFRP) within a first response window.

[0020] This Summary is provided to introduce a selection of concepts in a simplified form that are further described below in the Detailed Description. This Summary is not intended to identify key features or essential features of the claimed subject matter, nor is it intended to be used as an aid in determining the scope of the claimed subject matter. The claimed subject matter is not limited to implementations that solve any or all disadvantages noted in the Background.

BRIEF DESCRIPTION OF THE DRAWINGS

[0021] Aspects of the present disclosure are illustrated by way of example and are not limited by the accompanying figures for which like references indicate elements.

[0022] FIG. **1** illustrates a wireless network for communicating data.

[0023] FIG. **2** illustrates a base station with transmitting and receiving beams according to an example embodiment

[0024] FIG. **3** illustrates physical channels and transmitting signals on the physical channels in accordance with FIG. **2**.

[0025] FIGS. **4**A and **4**B illustrate examples of beam failure between a base station and user equipment.

[0026] FIG. **4**C illustrates a multiple input multiple output (MIMO) system with m transmit and n receive antennas.

[0027] FIGS. **5**A-**5**C illustrate a flow diagram for selection of a channel and examples of time of arrival for multiple beam failure recovery requests.

[0028] FIG. **5**D is an example diagram illustrating scheduling request opportunities for user equipment to be configured.

[0029] FIGS. **6**A and **6**B illustrate timing diagrams for sending multiple beam failure requests and responses.

[0030] FIGS. **7**A and **7**B illustrate flow diagrams in accordance with the disclosed embodiments.

[0031] FIG. **8**A illustrates example user equipment that may implement the methods and teachings according to this disclosure.

[0032] FIG. **8**B illustrates example base station that may implement the methods and teachings according to this disclosure.

[0033] FIG. **9** is a block diagram of a network device that can be used to implement various embodiments.

DETAILED DESCRIPTION

[0034] The disclosure relates to technology for recovering from a beam failure between user equipment and a base station.

[0035] User equipment and base stations establish a connections using downlink and uplink beam pairs. Often times, for example as a result of blockage or user equipment rotation or displacement, the connection between the user equipment and the base station is disrupted, resulting in a beam failure. To overcome such failure, a beam failure recovery mechanism may help to improve high frequency link performance. In particular, a beam failure recovery request (BFRQ) and response (BFRQ) method based on a PRACH-like channel and PUCCH is disclosed. The disclosed mechanism determines whether the BFRQ should be sent using the PRACH-like channel or the PUCCH, depending on the expected BFRQ.

[0036] It is understood that the present embodiments of the disclosure may be implemented in many different forms and that claims scopes should not be construed as being limited to the embodiments set forth herein. Rather, these embodiments are provided so that this disclosure will be thorough and complete and will fully convey the inventive embodiment concepts to those skilled in the art. Indeed, the disclosure is intended to cover alternatives, modifications and equivalents of these embodiments, which are included within the scope and spirit of the disclosure as defined by the appended claims. Furthermore, in the following detailed description of the present embodiments of the disclosure, numerous specific details are set forth in order to provide a thorough understanding. However, it will be clear to those of ordinary skill in the art that the present embodiments of the disclosure may be practiced without such specific details.

[0037] FIG. **1** illustrates a wireless network for communicating data. The communication system **100** includes, for example, user equipment **110**A-**110**C, radio access networks (RANs) **120**A-**120**B, a core network **130**, a public switched telephone network (PSTN) **140**, the Internet **150**, and other networks **160**. Additional or alternative networks include private and public data-packet networks including corporate intranets. While certain numbers of these components or elements are shown in the figure, any number of these components or elements may be included in the system **100**.

[0038] In one embodiment, the wireless network may be a fifth generation (5G) network including at least one 5G base station which employs orthogonal frequency-division multiplexing (OFDM) and/or non-OFDM and a transmission time interval (TTI) shorter than 1 ms (e.g. 100 or 200 microseconds), to communicate with the communication devices. In general, a base station may also be used to refer any of the eNB and the 5G BS (gNB). In addition, the network may further include a network server for processing information received from the communication devices via the at least one eNB or gNB.

[0039] System **100** enables multiple wireless users to transmit and receive data and other content. The system **100** may implement one or more channel access methods, such as but not limited to code division multiple access (CDMA), time division multiple access (TDMA), frequency division multiple access (FDMA), orthogonal FDMA (OFDMA), or single-carrier FDMA (SC-FDMA).

[0040] The user equipment (UE) **110**A-**110**C are configured to operate and/or communicate in the system **100**. For example, the user equipment **110**A-**110**C are configured to transmit and/or receive wireless signals or wired signals. Each user equipment **110**A-**110**C represents any suitable end user device and may include such devices (or may be referred to) as a user equipment/device, wireless transmit/receive unit (WTRU), mobile station, fixed or mobile subscriber unit, pager, cellular telephone, personal digital assistant (PDA), smartphone, laptop, computer, touchpad, wireless sensor, or consumer electronics device.

[0041] In the depicted embodiment, the RANs **120**A-**120**B include one or more base stations **170**A, **170**B (collectively, base stations **170**), respectively. Each of the base stations

170 is configured to wirelessly interface with one or more of the UEs **110**A, **110**B, **110**C to enable access to the core network **130**, the PSTN **140**, the Internet **150**, and/or the other networks **160**. For example, the base stations (BSs) **170** may include one or more of several well-known devices, such as a base transceiver station (BTS), a Node-B (NodeB), an evolved NodeB (eNB), a next (fifth) generation (5G) NodeB (gNB), a Home NodeB, a Home eNodeB, a site controller, an access point (AP), or a wireless router, or a server, router, switch, or other processing entity with a wired or wireless network.

[0042] In one embodiment, the base station **170**A forms part of the RAN **120**A, which may include other base stations, elements, and/or devices. Similarly, the base station **170**B forms part of the RAN **120**B, which may include other base stations, elements, and/or devices. Each of the base stations **170** operates to transmit and/or receive wireless signals within a particular geographic region or area, sometimes referred to as a "cell." In some embodiments, multiple-input multiple-output (MIMO) technology may be employed having multiple transceivers for each cell.

[0043] The base stations **170** communicate with one or more of the user equipment **110**A-**110**C over one or more air interfaces (not shown) using wireless communication links. The air interfaces may utilize any suitable radio access technology.

[0044] It is contemplated that the system **100** may use multiple channel access functionality, including for example schemes in which the base stations **170** and user equipment **110**A-**110**C are configured to implement the Long Term Evolution wireless communication standard (LTE), LTE Advanced (LTE-A), and/or LTE Broadcast (LTE-B).

[0045] In other embodiments, the base stations **170** and user equipment **110**A-**110**C are configured to implement UMTS, HSPA, or HSPA+ standards and protocols. Of course, other multiple access schemes and wireless protocols may be utilized.

[0046] The RANs **120**A-**120**B are in communication with the core network **130** to provide the user equipment **110**A-**110**C with voice, data, application, Voice over Internet Protocol (VoIP), or other services. As appreciated, the RANs **120**A-**120**B and/or the core network **130** may be in direct or indirect communication with one or more other RANs (not shown). The core network **130** may also serve as a gateway access for other networks (such as PSTN **140**, Internet **150**, and other networks **160**). In addition, some or all of the user equipment **110**A-**110**C may include functionality for communicating with different wireless networks over different wireless links using different wireless technologies and/or protocols.

[0047] The RANs **120**A-**120**B may also include millimeter and/or microwave access points (APs). The APs may be part of the base stations **170** or may be located remote from the base stations **170**. The APs may include, but are not limited to, a connection point (a mmW CP) or a base station **170** capable of mmW communication (e.g., a mmW base station). The mmW APs may transmit and receive signals in a frequency range, for example, from 6 GHz to 100 GHz, but are not required to operate throughout this range. As used herein, the term base station is used to refer to a base station and/or a wireless access point.

[0048] Although FIG. **1** illustrates one example of a communication system, various changes may be made to FIG. **1**. For example, the communication system **100** could include any number of user equipment, base stations, networks, or other components in any suitable configuration. It is also appreciated that the term user equipment may refer to any type of wireless device communicating with a radio network node in a cellular or mobile communication system. Non-limiting examples of user equipment are a target device, device-to-device (D2D) user equipment, machine type user equipment or user equipment capable of machine-to-machine (M2M) communication, laptops, PDA, iPad, Tablet, mobile terminals, smart phones, laptop embedded equipped (LEE), laptop mounted equipment (LME) and USB dongles.

[0049] FIG. **2** illustrates a base station with transmitting and receiving beams according to an example embodiment. The base station **202** manages a cell **204** divided into one or more sectors as its service coverage area and forms multiple transmit/receive (Tx/Rx) beams BM1-BM7 using beamforming schemes. Beamforming generally refers to use of multiple antennas to control the direction of a wavefront by appropriately weighting the magnitude and phase of individual antenna signals. Beamforming schemes includes, but are not limited to, digital beamforming (e.g., Transmit (Tx) pre-Inverse Fast Fourier Transform (pre-IFFT) beamforming/Receive (Rx) post-Fast Fourier Transform (post-FFT) beamforming), analog beamforming (e.g., Tx post-IFFT beamforming/Rx pre-FFT beamforming), or a combination thereof. The base station **202** transmits the beamformed signals by sweeping them simultaneously or successively, for example, beginning with beam BM1 and ending with BM7.

[0050] User equipment (UE), such as user equipment **110**A-**110**C (FIG. **1**), located within the cell of the base station **202** may be configured to receive signals omnidirectionally without supporting Rx beamforming, receive signals while supporting Rx beamforming by using one beamforming pattern each time, or receive signals while supporting Rx beamforming by simultaneously using a plurality of beamforming patterns in different directions.

[0051] If the user equipment **110**A-**110**C does not support Rx beamforming, the user equipment **110**A-**110**C measures the channel quality of a reference signal (RS) in each transmission beam and reports the measurements to the base station **202**. The station **202** selects the best beam for the user equipment **110**A-**110**C from among a plurality of Tx beams. If the user equipment **110**A-**110**C is configured to support Rx beamforming, the user equipment **110**A-**110**C measures the channel qualities of multiple Tx beams received from the base station **202** for each reception beam pattern and reports a total or some high-ranked measurements of all Tx-Rx beam pairs to the base station **202**. The base station **202** may allocate an appropriate Tx beam to the user equipment **110**A-**110**C. If the user equipment **110**A-**110**C is capable of receiving a plurality of Tx beams from the base station **202** or supporting a plurality of base station Tx-user equipment Rx beam pairs, the base station **202** may select a beam, taking into account diversity transmission through repeated transmission or simultaneous transmission.

[0052] FIG. **3** illustrates physical channels and transmitting signals on the physical channels in accordance with FIG. **2**. When user equipment **110**A-**110**C (FIG. **1**) is powered on or enters a new cell, such as cell **204** (FIG. **2**), the user equipment performs an initial cell search **302**. The initial cell search **302** involves acquisition of synchronization to a base station, such as gNB **202**. Specifically, the user equipment synchronizes its timing to the gNB **202** and

acquires a cell Identifier (ID) and other information by receiving a Primary Synchronization Channel (P-SCH) and a Secondary Synchronization Channel (S-SCH) from the gNB **202**. Subsequently, the user equipment **110**A-**110**C may acquire information broadcast in the cell by receiving a Physical Broadcast Channel (PBCH) from the gNB **202**. During the initial cell search, the user equipment **110**A **110**C may monitor a downlink (DL) channel state by receiving a do unlink reference Signal (DL RS).

[0053] After the initial cell search, the user equipment **110**A-**110**C may acquire detailed system information at **304** by receiving a Physical Downlink Control Channel (PDCCH) and receiving a Physical Downlink Shared Channel (PDSCH) based on information included in the PDCCH.

[0054] If the user equipment **110**A-**110**C initially accesses the gNB **202** or has no radio resources for signal transmission to the gNB **202**, the user equipment **110**A-**110**C may perform a random access procedure at **306** with the gNB **202**. During the random access procedure **306**,

[0055] Upon completion of the above process, the user equipment **110**A-**110**C may receive a PDCCH and/or a PDSCH from the gNB **202** and transmit a Physical Uplink Shared Channel (PUSCH) and/or a PUCCH to the gNB **202**, which is a general DL and UL signal transmission procedure at **308**. Specifically; the user equipment **110**A-**110**C receives Downlink Control Information (DCI) on a PDCCH. The DCI includes, for example, control information such as resource allocation information for the user equipment **110**A-**110**C.

[0056] Control information that the user equipment **110**A-**110**C transmits to the gNB **202** on the uplink (UL) channel or receives from the gNB **202** on the DL channel includes a DL/UL ACKnowledgment/Negative ACKnowledgment (ACK/NACK) signal, a Channel Quality Indicator (CCM; a Precoding Matrix Index (PMI), a Rank Indicator (RI); etc. The control information, such as a CQI, a PMI, an RI, etc., may be transmitted on a PUSCH and/or a PUCCH.

[0057] FIGS. **4**A and **4**B illustrate examples of beam failure between a base station and user equipment. As illustrated, base station **402** is in communication with user equipment **404**, in which the base station **402** and user equipment **404** communicate via DL beam pairs and UL beam pairs. In one embodiment, the DL beam pair fails (FIG. **4**A). In another embodiment, the DL/UL beam pair fails (FIG. **4**B).

[0058] Before establishing a communication or beam pair link with a base station **402**, user equipment **404** generally performs cell acquisition and synchronization. The cell acquisition step typically involves receiving a synchronization signal from base station **402**. In a high frequency wave band, beamforming may be applied to synchronization signals (otherwise, the distance at which the synchronization signal can be received is much smaller than the distance at which the beamformed data channels can be received). If the synchronization signals are beamformed, only user equipment **404** within the narrow angle covered by the beam are able to receive the synchronization signal. To ensure that user equipment **404** receives the synchronization signal, the base station **402** may "beam-sweep" the synchronization signal having the narrow angle covered by the beam. Beam sweeping refers to rotating the direction of the beam to cover all directions such that it may be detected in areas of the beam sweep by the user equipment **404**. To receive the synchronization signal, the user equipment **404** may also need to rotate the direction in which it searches for the synchronization signal. Rotation allows the antennas (which may be phase-arrayed) of the base station **402** and user equipment **404** to be mutually aligned.

[0059] The cell acquisition and synchronization becomes even more complicated if the user equipment **404** is moving, as the direction of arrival of the synchronization signal beam continually changes. Under these circumstances, the user equipment **404** may try to locate multiple base stations **402** to identify multiple cells suitable for service. However, sweeping procedures to identify a group of base stations can mean a substantial increase in the cell acquisition duration.

[0060] At higher frequencies (e.g., microwave and millimeter-wave spectrum), beamformed transmissions are an important feature to overcome higher path losses. Beamforming may be applied to user equipment specific DL and UL data transmissions, and also to common channels such as synchronization and control channels on the DL and random access channels on the UL.

[0061] Since the antenna arrangements (FIG. **4**C) at the base station **402** and at the user equipment **404** allow beamforming, there may be multiple beams in multiple directions for transmission and reception at each of the base stations **402** and the user equipment **404**. For example, there may be any number of beam directions for reception at the user equipment **404** and any number of directions for beam transmission at the base station **402**.

[0062] In the embodiment of FIG. **4**A, a single or unidirectional transmission and reception beam pair are illustrated, whereas in FIG. **4**B, multiple directions or omnidirectional transmission and reception beam pairs are illustrated. In either case, the system may determine the "best" beam pair(s) (e.g., the beam with the strongest signal, fastest DL/UL speed, etc.) for transmission and reception among the various reception and transmission directions. In this regard, a signal received from the base station **402** from a particular receive direction can be identified as having a corresponding transmit direction to transmit to the base station **402**.

[0063] Beam pair transmission and reception (in the DL and UL beams) use multiple access technologies—orthogonal frequency division multiple access (OFDMA) for the DL, and single-carrier frequency division multiple access (SC-FDMA) for the UL. Dedicated data channels are not used in next generation systems, such as LTE and 5G. Instead shared transport channel resources are used in both the DL and the UL communications between the base station **402** and the user equipment **404**. These shared transport channels DL-SCH and UL-SCH are respectively mapped to the physical downlink shared channel (PDSCH) on the DL OFDM subframe and physical uplink shared channel (PUSCH) on the UL SC-FDMA subframe.

[0064] The OFDM and the SC-FDMA subframes respectively include the physical downlink control channel (PDCCH) and physical uplink control channel (PUCCH). The PDCCH is used to convey user equipment-specific DL control information (DCI) from the base station **402** to the user equipment **404**. Similarly, the PUCCH is used to carry UL control information (UCI) from the user equipment **404** to the base station **402**, such as channel quality indication (CQI) reports, ACK/NACK responses and scheduling requests (SR).

[0065] At some point after establishing a communication or beam pair link (BPL), one of the beam pairs may fail

(beam failure is represented in the diagrams by the "X" across a respective beam). Beam failure, as explained herein, may be the result of many factors, such as antenna misalignment, signal strength, etc. As illustrated in the embodiment of FIG. **4**A, the DL beam has faded and the UL beam remains active. In the embodiment of FIG. **4**B both the DL and UL beams fail.

[0066] In order for the system to recover from such a beam failure, the user equipment (UE) **404** sends a beam failure recovery request (BFRQ) to the base station (gNB) **402**. In one embodiment, when only the DL beam has failed (FIG. **4**A), the user equipment **404** may use the active PUCCH (originally allocated for UCI) to report the beam failure and request recovery from the base station **402**, as agreed upon during the 3GPP TSG RAN WG1 #89 meeting. In another embodiment, when the DL and UL beams have faded, the user equipment **404** may also attempt to use the PUCCH for BFRQ. Beam failure recovery in this instance is less likely to be successful since both the UL and DL beams have failed. In either case, the BFRQ sent by the user equipment **404** requires a response message (BFRQ response) from the base station **402** if beam failure is to be recovered. However, the user equipment **404** does not know which DL beam will be used by the base station **402** to transmit a BFRQ response. The term beam failure recovery may bear other names, such as beam/link failure-recovery/reconfiguration. Additionally, in one embodiment, the BFRQ operation is generally carried out by the physical layer functions of the user equipment **404**, where the physical layer operation is typically instructed by higher layer functions of the user equipment **404**.

[0067] In order for the base station **402** to send a BFRQ response, the user equipment **404** first determines which candidate beam(s) may be used by the base station **402** to send a response. A candidate beam is understood to be any beam being transmitted/received by the user equipment **404** and base station **402**, except for the failing beam (the beam that was detected as failing). In one embodiment, the candidate beam is determined based on the received signal strength or power.

[0068] To determine the candidate beam, the user equipment **402** uses the spatial quasi co-located (SQCL'ed) information between the base station **402** transmission (DL) and receive (UL) beams. Two antenna ports may be said to be SQCL'ed if large-scale properties of a radio channel over which a symbol on one antenna port is conveyed can be inferred from a radio channel over which a symbol on the other antenna port is conveyed. The large-scale properties may include, for example, delay spread, Doppler spread, Doppler shift, average gain, and average delay.

[0069] In one embodiment, the UE will monitor the base station **402** DL beam(s) SQCL'ed with the base station **402** UL receive beam for BFRQ reception. Specifically, the user equipment **404** monitors the PDCCH region of a DL beam with the assumption that the corresponding PDCCH demodulation reference signal (DMRS) is SQCL'ed with the RS of the identified candidate beam(s) by the user equipment **404**. To make this determination, the user equipment **404** may (1) be provided with the SQCL'ed information between the active DL/UL beam pairs directly from the base station **402**, or (2) utilize beam correspondence information between the DL and UL beam pairs. Beam correspondence refers to the reciprocity between UL and DL beams. For example, if a base station **402** or user equipment **404** is able to determine the TX beam to use based on the Rx beam, then it may be said to have beam correspondence.

[0070] In the case where the beam correspondence information is not readily available (e.g., in a multi-beam architecture for millimeter or microwave operation), the SQCL'ed information may be conveyed directly from the base station **402** in beam configuration signaling, such as Radio Resource Control (RRC), Medium Access Control (MAC)-Control Element (CE) or DL control information (DCI).

[0071] In the case where the beam correspondence is available, the user equipment **404** may determine the SQCL'ed status for the active beam pairs. For example, when beam correspondence information is available in the base station **402**, the user equipment TX beam is indicated by the base station **402** CSI-RS resource indicator, thereby enabling the user equipment to determine the SQCL'ed DL beam pair and UL beam pair.

[0072] Although not the subject of this disclosure, in one embodiment, if no SQCL'ed DL beam pair is available for the UL beam pair that was in use prior to beam failure, the user equipment **404** may employ a PRACH-like (e.g., different parameters for preamble sequences from PRACH) BFRQ scheme.

[0073] FIG. **4**C illustrates a multiple input multiple, output (MIMO) system with m transmit and n receive antennas. The MIMO system depicted in the figure represents one non-limiting embodiment of transmission (TX) and reception (RX) antennas that may be used in the systems depicted in FIGS. **4**A and **4**B. As illustrated, the MIMO system includes m TX antennas and n RX antennas. Accordingly, the receiver receives a signal y that results when the input signal vector x is multiplied by the transmission matrix H represented by the equation y=H*x, where

$$H = \begin{bmatrix} h11 & \cdots & h1m \\ \vdots & \ddots & \vdots \\ hn1 & \cdots & hnm \end{bmatrix}$$

[0074] The transmission matrix H contains the channel impulse responses h_{nm}, which reference the channel between the TX antenna m and the RX antenna n. The rank of the channel matrix defines the number of linearly independent rows or columns in H, and indicates how many independent data streams (layers) can be transmitted simultaneously. To increase the data rate, spatial multiplexing may be employed. Using this technique, the data is divided into separate streams which are then transmitted simultaneously over the same resources. The transmission includes reference signals that are also known to the received, such that the receiver may perform a channel estimation for each transmit antenna's signal. The receiver may then report the channel status to the transmitter via a feedback channel to enable changes to be made as channel conditions change.

[0075] FIG. **5**A illustrates a flow diagram for selecting a request channel, and FIG. **5**B illustrates an example time of arrival of multiple beam failure recovery requests. As described in 3GPP R1-1709309, the following agreements on beam failure recovery (BFR) were reached.

[0076] To detect a beam failure, the UE (e.g., UE **404**) monitors a reference signal (beam failure detection RS) to assess whether a beam failure trigger condition has been met

(e.g., beam signal strength has dropped below a threshold). The beam failure detection RS includes, in one embodiment, a periodic CSI-RS for beam management, where an SS-block within the serving cell can be considered if the SS-block is also employed in beam management.

[0077] In order for the UE **404** to report detection of the beam failure, the UE **404** monitors the beam identification RS to find a new candidate beam. For example, the UE **404** monitors the periodic CSI-RS to detect beam failure when configured by the network, or the UE **404** monitors the periodic CSI-RS and SS-blocks within the serving cell when the SS-block is used to detect beam failure.

[0078] After the UE **404** detects the beam failure; a beam failure recovery request (BFRQ) transmission is performed. The BFRQ contains information that includes at least the following: explicit/implicit information that identifies the UE **404** and new gNB TX beam information, and explicit/implicit information that identifies the UE **404** and whether a new candidate beam exists. For example, the BFRQ may include a field that can be used by the gNB **402** to identify the UE **404** identity as well as the new identified beam (explicit manner). In another example, the BFRQ may include a preamble sequence that can be used by gNB **402** to identify the UE **404** identity as well as the new identified beam (implicit manner). In the latter case, UE **404** and gNB **402** need to agree on an association between the preamble sequence and the UE **404** identity/new identified beam. In one embodiment, the DL beam for transmitting the BFRQ may be one of PRACH, PUCCH or beam recovery random access channel. In one other embodiment, the BFRQ resource/signal may be used for a scheduling request.

[0079] The PRACH is an uplink channel used by the UE **404** for connection request purposes, and carries the RACH transport channel data, whereas the beam recovery random access channel is a PRACH-like structure in which different parameters for preamble sequences from PRACH are employed. In one other embodiment, the beam recovery random access channel may be the PRACH. Without loss of generality, in the following, we will use PRACH to represent beam recovery random access channel. The PUCCH is used to carry uplink control information (UCI) when the UE does not have any application data or radio resource control (RRC) signaling. The PUCCH controls signaling channel comprises HARQ ACK/NACK; CQI-channel quality indicators, MIMO feedback-RI (Rank Indicator), PMI (Precoding Matrix Indicator, scheduling requests for uplink transmission, and BPSK or QPSK used for PUCCH modulation.

[0080] After the BFRQ transmission has been performed, the UE **404** monitors a control channel search space to receive the gNB's **402** response (the BFRP) for the UE's BFRQ.

[0081] Based on the agreed upon beam failure request and recovery mechanisms discussed above, both the PRACH and PUCCH channels may be used in beam failure, recovery. For efficiency of communication, the UE **404** (or gNB **402**) should determine which of the two channels to use when transmitting the BFRQ and the BFRP. In the example and non-limiting embodiments that follow, two scenarios are addressed; (1) the UE has previously used a PRACH to transmit a BFRQ, and a PUCCH resource arrives before a PRACH-BFRP, and (2) the UE has previously used a PUCCH to transmit a BFRQ, and a PRACH resource arrives before the PUCCH-BFRP.

[0082] With reference to FIG. **5**A, the UE **404** determines whether to use the PUCCH or PRACH for sending/transmitting a BFRQ. For example, at **502**, the UE **404** determines whether a PUCCH-BRFQ opportunity or a PRACH-BRFQ opportunity is expected to arrive first. If the UE **404** determines that a PUCCH-BRFQ opportunity will arrive first, then the UE **404** will use a PUCCH to send the BFRQ at **504**. Otherwise, if the UE **404** determines that a PRACH-BFRQ opportunity will arrive first, then the UE **404** will use a PRACH to send the BFRQ at **506**. PUCCH-BRFQ opportunity and PRACH-BRFQ opportunity are described below with reference to FIG. **5**C and the examples that follow.

[0083] In general, it is appreciated that PUCCH is a less reliable channel compared to PRACH (which is more reliable as a result of its random access channel) as it remains subject to beam failure in the uplink direction. Accordingly, in one embodiment, PRACH should be in used when available in lieu of PUCCH, unless PUCCH can provide a faster resolution for beam failure recovery, as discussed below with reference to the various examples.

[0084] In the example of FIG. **5**B, we assume for purposes of discussion that a PUCCH-BRFQ opportunity arrives at time t**1**, which is earlier than an expected PRACH-BFRQ OPPORTUNITY at time t**2**. When the PUCCH-BFRQ is made by the UE **404** at t**1** the UE **404** monitors the channel for a PUCCH-BFRP within a response time window of (t**1**+TW**0**), where TW**0** stands for the window duration. Typically, a time window may be specified by a time window starting position in time, and/or a time window ending position in time, and/or a time window duration in time. Note that the specification of the above message (starting position in time, and/or ending position in time, and/or time window duration in time) may be carried, from gNB **402** to UE **404**, in a RRC message, or in a DCI message, or using a combination of the two. The starting position in time, in one embodiment, may be the same as the moment when the BFRQ is transmitted. Additionally, it is appreciated that the starting position in time, ending position in time, and/or time window duration may use units such as slots, mini-slots, milli-seconds, OFDM symbol periods Accordingly, if the UE **404** expects to receive a PUCCH-BRRP before the PRACH-BFRQ OPPORTUNITY at t**2**, the UE **404** performs the PUCCH-BFRQ at t**1** Otherwise, the UE **404** does not perform the PUCCH-BRRQ at t**1**. Instead, the UE **404** will perform the PRACH-BFRQ at t**2**, even though t**1** (PUCCH-BRFQ opportunity) is earner than t**2** (PRACH-BFRQ OPPORTUNITY) and t**1**+TW**0** is later than t**2** (La, even if the response arrives after PRACH).

[0085] In the example of FIG. **5**C, we assume for purposes of discussion that the PUCCH-BRFQ opportunity arrives at t**1**, which is after the PRACH-BFRQ OPPORTUNITY at t**2**. Under these circumstances, the PRACH-BFRQ OPPORTUNITY at t**2** should be used to send the PRACH-BFRQ.

[0086] FIG. **5**D is an example diagram illustrating scheduling request opportunities for user equipment to be configured. The scheduling request opportunities are a precursor to understanding when opportunities to transmit PUCCH and PRACH transmissions become available. A scheduling request can be used by the UE **404** to request scheduling at a certain time frequency resource, so that the UE **404** can use the scheduled resource to carry out a certain communication task.

[0087] In cellular radio systems, the base station (e.g., gNB) signals (on the PDCCH) the time-frequency resources

(physical resource blocks) that lie on the PDSCH and the PUSCH and which are allocated to a UE. This scheduling protocol allows advanced multi-antenna techniques like precoded transmission and MIMO operation for the DL shared data channel. For the case in which a UE has UL data to send, it will send a scheduling request (SR) to the gNB in order to obtain an UL grant for a PUSCH resource allocation.

[0088] There are two different ways in which a UE can send an SR. If the UE is not in an RRC connected state with the gNB it will use a random access, and if the UE is in an RRC connected state with the gNB it can use either the random access procedure or periodic SR resources. If periodic SR resources are configured, the UE will use one or more of the periodic SR resources on the PUCCH which are dedicated for that particular UE. Each of these dedicated SR resources may be considered an SR opportunity for the UE.

[0089] The interval of the UE's SR opportunities on the PUCCH is semi-statically fixed between 1 and 80 ms (milliseconds). In the figure, the UE is configured with a SR cycle which gives the interval between SR opportunities. Shorter intervals, and thus more frequent opportunities, are configured for UEs with delay critical services, while longer intervals were originally specified in order to allow conserving the PUCCH resources when the network is keeping a large number of UEs with relatively low activity levels in the RRC connected state. On the other hand, longer intervals between SR opportunities translate to longer delays when the UE needs to obtain PUSCH resources for delay critical signaling or data.

[0090] FIG. **6**A illustrates a timing diagram for sending multiple beam failure requests. Conventionally, more than one BFRQ for each BFR event is not permitted. That is, in conventional systems, the UE **404** does not send both a PUCCH-BFRQ and a PRACH-BFRQ for the same event.

[0091] In the depicted embodiment, more than one BFRQ (e.g., PUCCH-BFRQ, PRACH-BFRQ) is transmitted by a UE **404** for a single beam failure (BFR) event. Since more than one BFRQ may be transmitted by the UE **404**, different channels (e.g., PUCCH and PRACH) may be used to send the BFRQ (and receive the BFRP). In order for the gNB **402** to transmit a BFRP in response to a respective BFRQ, the BFRQs should be associated with an event such that the gNB **402** can categorize each of the BFRQs and send back a response (BFRP) to the appropriate BFRQ without duplication. Accordingly, the gNB **402** should determine how to handle a response (BFRP) such that a single BFRP is sent back to the UE **404** from the gNB **402** per BFR event.

[0092] In one embodiment, the gNB **402** may implement an algorithm to determine whether multiple BFRQs (PRACH-BFRQ and PUCCH-BFRQ) correspond to the same event, such that the gNB **402** may provide a single response to the event. For example, if the multiple requests arrive within a certain time window, gNB **402** may view them corresponding to same event. In another embodiment, the UE **404** may signal (i.e., provide information) in the BFRQ that the PUCCH-BFRQ and the PRACH-BFRQ relate to the same event, as discussed in the examples depicted in FIGS. **6**A and **63**.

[0093] In the example of FIG. **6**A, the PUCCH-BFRQ is sent followed by the PRACH-BFRQ. In particular, after a PUCCH-BFRQ is sent at t**1**, and before a PUCCH-BFRP arrives at the UE **404** from the gNB **402**, the UE **404** has a PRACH-BFRQ OPPORTUNITY and sends a second BFRQ using a PRACH-BFRQ#1 (unlike the example in FIG. **5**B in which only one of the BFRQs are sent, both BFRQs are sent in this example). Under these circumstances, the UE **404** notifies (as explained below) the gNB **402** that the second BFRQ (PRACH-BFRQ) shares the same BFR event as the first BFRQ (PUCCH-BFRQ), Notifying the gNB **402** that both BFRQs relate to the same event prevents the gNB **402** from misinterpreting the two BFRQs as being separate events for the same UE **404**.

[0094] In one embodiment, the UE **404** may notify the gNB **402** by marking the second BFR event, when sending the BFRQ, as being second in time or order such the gNB **402** identifies the second BFRQ (PRACH-BFRQ) as not being a first request.

[0095] In another embodiment, the UE **404** may notify the gNB **402** by placing a pointer to the first BFRQ (PUCCH-BFRQ) in the second BFRQ (PRACH-BFRQ), which indicates that the PUCCH-BFRQ and the PRACH-BFRQ correspond to the same BFR event.

[0096] In still another embodiment, the UE **404** may notify the gNB **402** by placing a BFR event ID in both the first and second BFRQs (PUCCH-BFRQ and PRACH-BFRQ), such that all BFRQs with the same BFR event ID correspond to the same BFR event.

[0097] FIG. **6**B illustrates a timing diagram for sending multiple beam failure responses. In the depicted example, the gNB **402** is due to send a PRACH-BFRP and a PUCCH-BFRP to a UE **404** in response to the UE's **404** multiple BFRQs.

[0098] Under circumstances where the gNB **402** is responding the UE's **404** multiple BFRQs, the gNB **402** sends a BFRP for each BFRQ (one corresponding to each channel). For example, the gNB **402** may send a PUCCH-BFRP in response to the PUCCH-BFRQ by the UE **404**, and send a PRACH-BFRP in response to the PRACH-BFRQ by the UE **404**. Similar to the UE **404** notifying the gNB **402** of the same BFR event, the gNB may associate the two BFRPs (PUCCH-BFRP and PRACH-BFRP) such that the UE **404** can identify the two BFRPs as corresponding to the same event.

[0099] In one embodiment, the gNB **402** marks the second BFRP as second in time or order. In another embodiment, the gNB **402** places a pointer to the first BFRP in the second BFRP. In still another embodiment, the gNB **402** places a BFR event ID in both BFRPs such that the UE **404** identifies the two BFRPs as corresponding to the same event.

[0100] It is appreciated in the examples above that the UE **404** may first send a PRACH-BFRQ, followed by a PUCCH-BFRQ, and that the disclosure is no limited to the depicted embodiment.

[0101] In still another embodiment, the gNB **402** may be set to respond to a single BFR Q using, for example, an algorithm. For example, the gNB **402** may respond to the BFRQ by (1) always sending the PRACH-BFRP, (2) always sending the PUCCH-BFRP, (3) always sending the BFRP that arrives first, or (4) sending a BFRP at the location of another BFRP.

[0102] As illustrated in the example of FIG. **6**B, a single BFRP is sent in response to two BFRQs. In the example, the UE **404** sends two BFRQs—a PUCCH-BFRQ at time t**1** and a PRACH-BFRQ at time t**2**. The UE **404** then wafts for a single BFRP—a PUCCH-BFRP at time t**3** or a PRACH-BFRP at t**4**, from the gNB **402**.

[0103] The gNB **402** responds to the UE's **404** two BFRQs based on the afore-mentioned algorithm. For example, the UE **404** sends a PUCCH-BFRQ at t**1** and a PRACH-BFRQ at t**2**. The UE **404** then waits for a PUCCH-BFRP at t**3** and a PRACH-BFRP at t**4**. In response, the gNB sends out a single BFRP as follows: the gNB sends out a PRACH-BFRP at time t**4** (response always the PRACH-BFRP), the gNB sends out a PUCCH-BFRP at time t**3** (response always the PUCCH-BFRP), the gNB sends out a PUCCH-BFRP at time t**3** (response always the BFRP that comes first), and the gNB sends out a PRACH-BFRP at time t**3** (a BFRP at the location of another BFRP).

[0104] FIGS. **7**A and **7**B illustrate flow diagrams in accordance with the disclosed embodiments. In the embodiments described herein, the processes are implemented by the user equipment. However, it is appreciated that any of the system components, such as the base station or any component described in FIGS. **1**, **2**, **4**C, **8**A, **8**B and/or **9**, may be employed to implement the processes.

[0105] With reference to FIG. **7**A, user equipment (e.g., UE **110**) detects a beam failure event between the UE **110** and the base station (e.g., gNB **202**) at **702**. A beam failure event may be defined, for example, as a beam failure occurring between the UE **110** and gNB **202** (i.e., when a communication link established between the UE and gNB fans, for example, due to misalignment). At **604**, and in response to detecting the beam failure event, the UE **110** sends a first beam failure recovery request (BFRQ) (i.e., a request from the UE **110** to reestablish communication with the gNB **202**) to the gBN **202** and then searches for a beam failure recovery response (BFRP) (i.e., a response from the gNB **202** to begin reestablishing the beam with the UE **110**) within a first response time window at **706**. In one embodiment, the first BFRQ is sent using one of a PUCCH and a PRACH for beam failure recovery. In one other embodiment, the first response window is a PUCCH response window when the BFRQ is sent using the PUCCH, and the first response window is a beam failure random access channel (PRACH) response window when the BFRQ is sent using the PRACH for beam failure recovery.

[0106] Turning to FIG. **7**B, at **708** the UE **110** sends a second BFRQ form the UE **110** to the gNB **202** for a same beam failure event which indicates, at **710**, that the first and second BFRQ correspond to the same beam failure event. Moreover, the indication may include one of marking the second BFRQ as secondary in time or order (**710**A), placing a pointer in the second BFRQ indicating that the first and second BFRQs correspond to the same beam failure event (**710**B), and placing a beam failure event ID in the first BFRQ and the second BFRQ with the same beam failure event ID (**710**C). In still one other embodiment (not illustrated), the first and second BFRPs received from the base station may include a mark in the second BFRP as secondary as secondary in time or order, a pointer in the second BFRP to the first BFRP indicating that the first and second BFRPs correspond to the same beam failure event, and a beam failure event ID in the first and second BFRPs with the same beam failure event ID.

[0107] FIG. **8**A illustrates example user equipment that may implement the methods and teachings according to this disclosure. As shown in the figure, the UE **800** includes at least one processor **804**. The processor **804** implements various processing operations of the UE **800**. For example, the processor **804** may perform signal coding, data processing, power control, input/output processing, or any other functionality enabling the UE **800** to operate in the system **100** (FIG. **1**). The processor **804** may include any suitable processing or computing device configured to perform one or more operations. For example, the processor **804** may include a microprocessor, microcontroller, digital signal processor, field programmable gate array, or application specific integrated circuit.

[0108] The UE **800** also includes at least one transceiver **802**. The transceiver **802** is configured to modulate data or other content for transmission by at least one antenna **810**. The transceiver **802** is also configured to demodulate data or other content received by the at least one antenna **810**. Each transceiver **802** may include any suitable structure for generating signals for wireless transmission and/or processing signals received wirelessly. Each antenna **810** includes any suitable structure for transmitting and/or receiving wireless signals. It is appreciated that one or multiple transceivers **802** could be used in the UE **800**, and one or multiple antennas **810** could be used in the UE **800**. Although shown as a single functional unit, a transceiver **802** may also be implemented using at least one transmitter and at least one separate receiver.

[0109] The UE **800** further includes one or more input/output devices **808**. The input/output devices **808** facilitate interaction with a user. Each input/output device **808** includes any suitable structure for providing information to or receiving information from a user, such as a speaker, microphone, keypad, keyboard, display, or touch screen.

[0110] In addition, the UE **800** includes at least one memory **806**. The memory **806** stores instructions and data used, generated, or collected by the UE **700**. For example, the memory **806** could store software or firmware instructions executed by the processor(s) **804** and data used to reduce or eliminate interference in incoming signals. Each memory **806** includes any suitable volatile and/or non-volatile storage and retrieval device(s). Any suitable type of memory may be used, such as random access memory (RAM), read only memory (ROM), hard disk, optical disc, subscriber identity module (SIM) card, memory stick, secure digital (SD) memory card, and the like.

[0111] FIG. **8**B illustrates example base station that may implement the methods and teachings according to this disclosure. As shown in the figure, the base station **850** includes at least one processor **858**, at least one transmitter **852** at least one receiver **854**, one or more antennas **860**, and at least one memory **856**. The processor **858** implements various processing operations of the base station **850**, such as signal coding, data processing, power control, input/output processing, or any other functionality. Each processor **858** includes any suitable processing or computing device configured to perform one or more operations. Each processor **858** could, for example, include a microprocessor, microcontroller, digital signal processor, field programmable gate array, or application specific integrated circuit.

[0112] Each transmitter **852** includes any suitable structure for generating signals for wireless transmission to one or more UEs or other devices. Each receiver **854** includes any suitable structure for processing signals received wirelessly from one or more UEs or other devices. Although shown as separate components, at least one transmitter **852** and at least one receiver **854** could be combined into a transceiver. Each antenna **860** includes any suitable structure for transmitting and/or receiving wireless signals. While a

common antenna **860** is shown here as being coupled to both the transmitter **852** and the receiver **854**, one or more antennas **860** could be coupled to the transmitter(s) **852**, and one or more separate antennas **860** could be coupled to the receiver(s) **854**. Each memory **856** includes any suitable volatile and/or non-volatile storage and retrieval device(s).

[0113] FIG. **9** is a block diagram of a network device that can be used to implement various embodiments. Specific network devices may utilize all of the components shown, or only a subset of the components, and levels of integration may vary from device to device. Furthermore, the network device **900** may contain multiple instances of a component, such as multiple processing units, processors, memories, transmitters, receivers, etc. The network device **900** may comprise a processing unit **901** equipped with one or more input/output devices, such as network interfaces, storage interfaces, and the like. The processing unit **901** may include a central processing unit (CPU) **910**, a memory **920**, a mass storage device **930**, and an I/O interface **960** connected to a bus **970**. The bus **970** may be one or more of any type of several bus architectures including a memory bus or memory controller, a peripheral bus or the like.

[0114] The CPU **910** may comprise any type of electronic data processor. The memory **920** may comprise any type of system memory such as static random access memory (SRAM), dynamic random access memory (DRAM), synchronous DRAM (SDRAM), read-only memory (ROM), a combination thereof, or the like. In an embodiment, the memory **820** may include ROM for use at boot-up, and DRAM for program and data storage for use while executing programs. In embodiments, the memory **920** is non-transitory. In one embodiment, the memory **920** includes a detecting module **921**A detecting a beam failure event between the user equipment and a base station, a sending module **921**B sending a first beam failure recovery request (BFRQ) to the base station upon detection of the beam failure, wherein the first BFRQ is sent using one of a physical uplink channel (PUCCH) and a beam failure random access channel (PRACH), an indicating module **921**C indicating to the base station that the first and second BFRQs correspond to the same beam failure event, a transmitting module **921**D transmitting a beam, and a receiving module **921**E receiving a beam.

[0115] The mass storage device **930** may comprise any type of storage device configured to store data, programs, and other information and to make the data, programs, and other information accessible via the bus **970**. The mass storage device **930** may comprise, for example, one or more of a solid state drive, hard disk drive, a magnetic disk drive, an optical disk drive, or the like.

[0116] The processing unit **901** also includes one or more network interfaces **950**, which may comprise wired links, such as an Ethernet cable or the like, and/or wireless links to access nodes or one or more networks **980**. The network interface **950** allows the processing unit **901** to communicate with remote units via the networks **980**. For example, the network interface **950** may provide wireless communication via one or more transmitters/transmit antennas and one or more receivers/receive antennas. In an embodiment, the processing unit **901** is coupled to a local-area network or a wide-area network for data processing and communications with remote devices, such as other processing units, the Internet, remote storage facilities, or the like.

[0117] It is understood that the present subject matter may be embodied in many different forms and should not be construed as being limited to the embodiments set forth herein. Rather, these embodiments are provided so that this subject matter will be thorough and complete and will fully convey the disclosure to those skilled in the art. Indeed, the subject matter is intended to cover alternatives, modifications and equivalents of these embodiments, which are included within the scope and spirit of the subject matter as defined by the appended claims. Furthermore, in the following detailed description of the present subject matter, numerous specific details are set forth in order to provide a thorough understanding of the present subject matter. However, it will be clear to those of ordinary skill in the art that the present subject matter may be practiced without such specific details.

[0118] Aspects of the present disclosure are described herein with reference to flowchart illustrations and/or block diagrams of methods, apparatuses (systems) and computer program products according to embodiments of the disclosure. It will be understood that each block of the flowchart illustrations and/or block diagrams, and combinations of blocks in the flowchart illustrations and/or block diagrams, can be implemented by computer program instructions. These computer program instructions may be provided to a processor of a general purpose computer, special purpose computer, or other programmable data processing apparatus to produce a machine, such that the instructions, which execute via the processor of the computer or other programmable instruction execution apparatus, create a mechanism for implementing the functions/acts specified in the flowchart and/or block diagram block or blocks.

[0119] The computer-readable non-transitory media includes all types of computer readable media, including magnetic storage media, optical storage media, and solid state storage media and specifically excludes signals. It should be understood that the software can be installed in and sold with the device. Alternatively the software can be obtained and loaded into the device, including obtaining the software via a disc medium or from any manner of network or distribution system, including, for example, from a server owned by the software creator or from a server not owned but used by the software creator. The software can be stored on a server for distribution over the Internet, for example.

[0120] The terminology used herein is for the purpose of describing particular aspects only and is not intended to be limiting of the disclosure. As used herein, the singular forms "a", "an" and "the" are intended to include the plural forms as well, unless the context clearly indicates otherwise. It will be further understood that the terms "comprises" and/or "comprising," when used in this specification, specify the presence of stated features, integers, steps, operations, elements, and/or components, but do not preclude the presence or addition of one or more other features, integers, steps, operations, elements, components, and/or groups thereof.

[0121] The description of the present disclosure has been presented for purposes of illustration and description, but is not intended to be exhaustive or limited to the disclosure in the form disclosed. Many modifications and variations will be apparent to those of ordinary skill in the art without departing from the scope and spirit of the disclosure. The aspects of the disclosure herein were chosen and described in order to best explain the principles of the disclosure and the practical application, and to enable others of ordinary

skill in the art to understand the disclosure with various modifications as are suited to the particular use contemplated.

[0122] For purposes of this document, each process associated with the disclosed technology may be performed continuously and by one or more computing devices. Each step in a process may be performed by the same or different computing devices as those used in other steps, and each step need not necessarily be performed by a single computing device.

[0123] Although the subject matter has been described in language specific to structural features and/or methodological acts, it is to be understood that the subject matter defined in the appended claims is not necessarily limited to the specific features or acts described above. Rather, the specific features and acts described above are disclosed as example forms of implementing the claims.

What is claimed is:

1. A method for beam failure recovery in user equipment, comprising:

detecting a beam failure event between the user equipment and a base station;

sending a first beam failure recovery request (BFRQ) to the base station upon detection of the beam failure event; and

searching for a beam failure recovery response (BFRP) within a first response time window.

2. The method of claim **1**, wherein sending the BFRQ is carried out in the physical layer of the user equipment.

3. The method of claim **1**, wherein the first BFRQ is sent using one of a physical uplink channel (PUCCH) or a beam failure random access channel (PRACH) for beam failure recovery.

4. The method of claim **1**, wherein the first response time window is a PUCCH response window when the BFRQ is sent using the PUCCH, and the first response time window is a beam failure random access channel (PRACH) response window when the BFRQ is sent using the PRACH for beam failure recovery.

5. The method of claim **1**, wherein a parameter of the first response time window includes at least one of a response window starting position in time, a response window ending position in time or a response window duration in time.

6. The method of claim **5**, wherein the parameter of the first response time window is either signaled to the user equipment in at least one of a radio resource control (RRC) message or a downlink control information (DCI) message

7. The method of claim **3**, wherein the first BFRQ is sent using the PUCCH when a PUCCH-BFRQ opportunity arrives before a PRACH-BFRQ opportunity.

8. The method of claim **3**, wherein the first BFRQ is sent using the PUCCH when a PUCCH-BFRQ opportunity arrives after a PRACH-BFRQ opportunity.

9. The method of claim **3**, wherein

the PUCCH-BFRQ arrives at a first time and the PRACH-BFRQ arrives at a second time, and

the PUCCH-BFRQ is sent at the first time when a PUCCH-BFRQ opportunity response is expected before a PRACH-BFRQ opportunity at the second time, unless a sum of the first time and a response time exceeds the second time.

10. The method of claim **1**, further comprising:

sending a second BFRQ to the base station for a same beam failure event; and

indicating to the base station that the first and second BFRQs correspond to the same beam failure event.

11. The method of claim **10**, wherein the indicating includes one of:

marking the second BFRQ as secondary in time or order,

placing a pointer to the first BFRQ in the second BFRQ indicating that the first and second BFRQs correspond to the same beam failure event, and

placing a beam failure event ID in the first BFRQ and the second BFRQ with the same beam failure event ID.

12. The method of claim **10**, further comprising:

receiving first and second beam failure recovery responses (BFRPs) from the base station, wherein the BFRP includes one of:

a mark in the second BFRP as secondary as secondary in time or order,

a pointer in the second BFRP to the first BFRP indicating that the first and second BFRPs correspond to the same beam failure event, and

a beam failure event ID in the first and second BFRPs with the same beam failure event ID.

13. The method of claim **10**, wherein the second BFRQ is on a different channel than or carrier frequency than the first BFRQ.

14. A device for beam failure recovery in user equipment, comprising:

a non-transitory memory storage comprising instructions; and

one or more processors in communication with the memory, wherein the one or more processors execute the instructions to:

detect a beam failure event between the user equipment and a base station;

send a first beam failure recovery request (BFRQ) to the base station upon detection of the beam failure event; and

search for a beam failure recovery response (BFRP) within a first response time window.

15. The device of claim **14**, wherein sending the BFRQ is carried out by physical layer functions of and is based on higher layer instructions of the user equipment.

16. The device of claim **14**, wherein the first BFRQ is sent using one of a physical uplink channel (PUCCH) or a beam failure random access channel (PRACH) for beam failure recovery.

17. The device of claim **14**, wherein the first response time window is a PUCCH response window when the BFRQ is sent using the PUCCH, and the first response time window is a beam failure random access channel (PRACH) response window when the BFRQ is sent using the PRACH for beam failure recovery.

18. The device of claim **14**, wherein parameter of the first response time window includes at least one of a response window starting position in time, a response window ending position in time or a response window duration in time.

19. The device of claim **18**, wherein the parameter of the first response time window is either signaled to the user equipment in at least one of a radio resource control (RRC) message or a downlink control information (DCI) message.

20. The device of claim **16**, wherein the first BFRQ is sent using the PUCCH when a PUCCH-BFRQ opportunity arrives before a PRACH-BFRQ opportunity.

21. The device of claim **16**, wherein the first BFRQ is sent using the PUCCH when a PUCCH-BFRQ opportunity arrives after a PRACH-BFRQ opportunity.

22. The device of claim **16**, wherein

the PUCCH-BFRQ arrives at a first time and the PRACH-BFRQ arrives at a second time, and

the PUCCH-BFRQ is sent at the first time when a PUCCH-BFRQ opportunity response is expected before a PRACH-BFRQ opportunity at the second time, unless a sum of the first time and a response time exceeds the second time.

23. The device of claim **14**, further comprising:

sending a second BFRQ to the base station for a same beam failure event; and

indicating to the base station that the first and second BFRQs correspond to the same beam failure event.

24. The device of claim **23**, wherein the indicating includes one of:

marking the second BFRQ as secondary in time or order,

placing a pointer to the first BFRQ in the second BFRQ indicating that the first and second BFRQs correspond to the same beam failure event, and

placing a beam failure event ID in the first BFRQ and the second BFRQ with the same beam failure event ID.

25. The device of claim **22**, further comprising:

receiving first and second beam failure recovery responses (BFRPs) from the base station, wherein the BFRP includes one of:

a mark in the second BFRP as secondary as secondary in time or order,

a pointer in the second BFRP to the first BFRP indicating that the first and second BFRPs correspond to the same beam failure event, and

a beam failure event ID in the first and second BFRPs with the same beam failure event ID.

26. The device of claim **22**, wherein the second BFRQ is on a different channel than the first BFRQ.

27. A non-transitory computer-readable medium storing computer instructions for beam failure recovery in user equipment, that when executed by one or more processors, cause the one or more processors to perform the operations of:

detecting a beam failure event between the user equipment and a base station;

sending a first beam failure recovery request (BFRQ) to the base station upon detection of the beam failure event; and

searching for a beam failure recovery response (BFRP) within a first response window.

28. The non-transitory computer-readable medium of claim **27**, wherein the first BFRQ is sent using one of a physical uplink channel (PUCCH) or a beam failure random access channel (PRACH) for beam failure recovery.

29. The non-transitory computer-readable medium of claim **27**, wherein the first response time window is a PUCCH response window when the BFRQ is sent using the PUCCH, and the first time response window is a beam failure random access channel (PRACH) response window when the BFRQ is sent using the PRACH for beam failure recovery.

30. The non-transitory computer-readable medium of claim **27**, wherein the one or more processors are caused to further perform the operations of:

sending a second BFRQ to the base station for a same beam failure event; and

indicating to the base station that the first and second BFRQs correspond to the same beam failure event.

* * * * *