US006748536B1

(12) **United States Patent**
Madau

(10) **Patent No.: US 6,748,536 B1**
(45) **Date of Patent: Jun. 8, 2004**

(54) **KEY SECURITY SYSTEM FOR VEHICLE-BASED INFORMATION NODE**

(75) Inventor: **Adrian Madau**, Dearborn, MI (US)

(73) Assignee: **Visteon Global Technologies, Inc.**, Dearborn, MI (US)

(*) Notice: Subject to any disclaimer, the term of this patent is extended or adjusted under 35 U.S.C. 154(b) by 0 days.

(21) Appl. No.: **09/482,456**

(22) Filed: **Jan. 13, 2000**

(51) **Int. Cl.**[7] **G06F 12/14**; G06F 7/00; B60R 21/00

(52) **U.S. Cl.** **713/193**; 713/185; 701/36; 307/10.3

(58) **Field of Search** 380/259, 260, 380/262, 277; 711/163, 164; 713/193

(56) **References Cited**

U.S. PATENT DOCUMENTS

4,944,008 A	*	7/1990	Piosenka et al.	380/46
5,396,216 A		3/1995	Morgan	
5,513,107 A	*	4/1996	Gormley	701/48
5,581,462 A	*	12/1996	Rogers	701/3
5,677,952 A	*	10/1997	Blakley et al.	713/189
5,708,307 A		1/1998	Iijima et al.	
5,983,108 A		11/1999	Kennedy, III et al.	
6,198,996 B1	*	3/2001	Berstis	701/36
6,272,637 B1	*	8/2001	Little et al.	713/194
6,351,813 B1	*	2/2002	Mooney et al.	713/185
6,374,653 B1	*	4/2002	Gokcebay et al.	70/278.3
6,424,253 B1	*	7/2002	Shen	340/426.11

FOREIGN PATENT DOCUMENTS

DE	196 48 042 A1	5/1998
EP	0 667 597 A2	8/1995
EP	0 841 222 A1	5/1998
EP	0 924 370 A2	6/1999

* cited by examiner

Primary Examiner—Gilberto Barrón
Assistant Examiner—Minh Dinh
(74) *Attorney, Agent, or Firm*—John Kajander

(57) **ABSTRACT**

A system for providing a key-based access to data stored on a vehicle allows the vehicle to be a critical link as a platform for mobile computing while preserving data security. Multiple hierarchies of key codes allow all users to have access to all vehicle functions but different memory partitions for storing data. The partitions may be used for storing user specific data including passwords, preference settings, and driving log data. The data may be encrypted by the key code to be secure even if the memory system is removed from the vehicle or the vehicle is stolen.

16 Claims, 2 Drawing Sheets

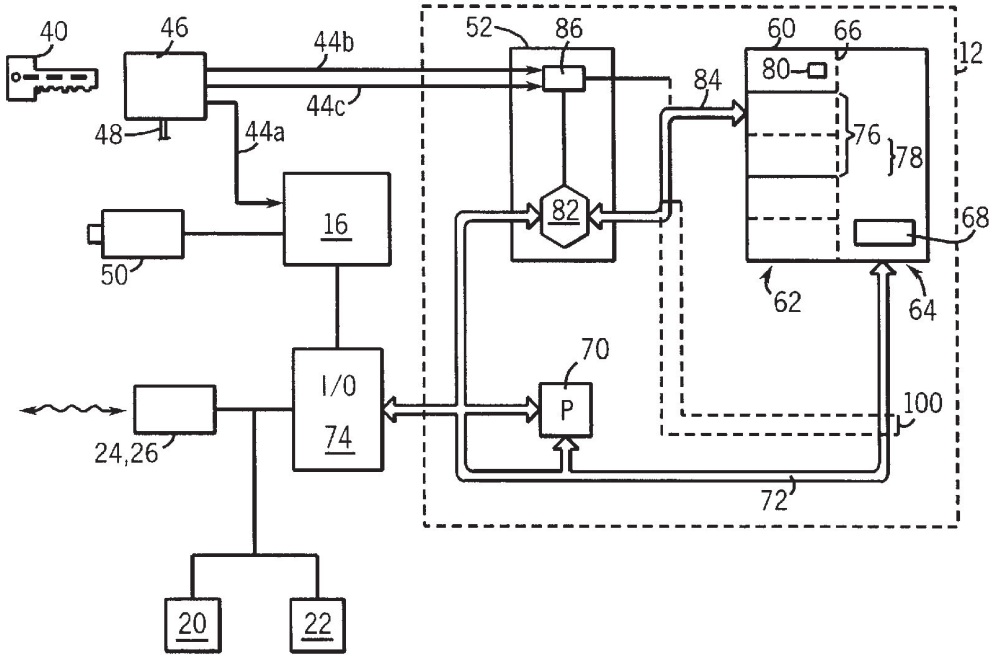

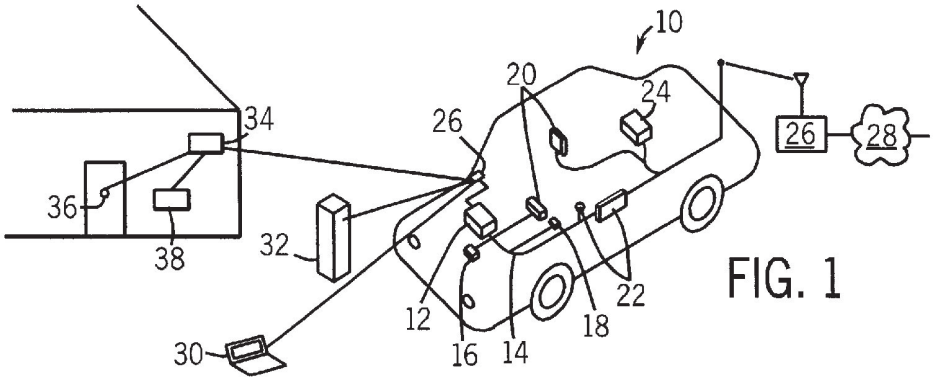

FIG. 1

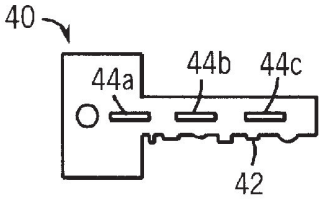

FIG. 2

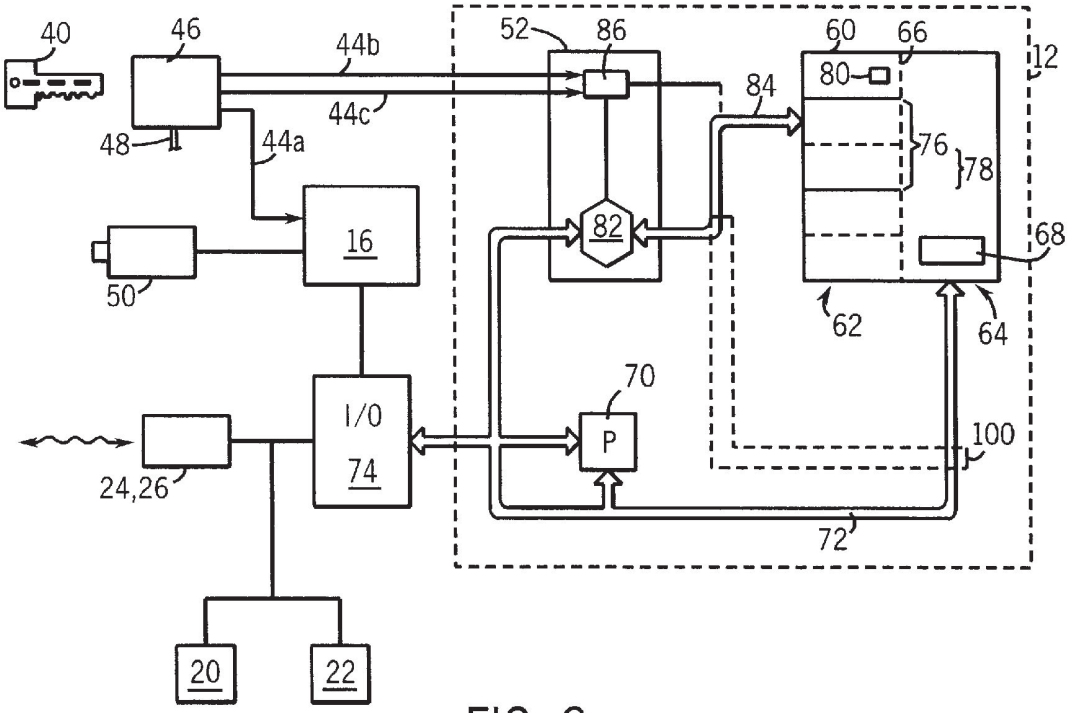

FIG. 3

FIG. 4

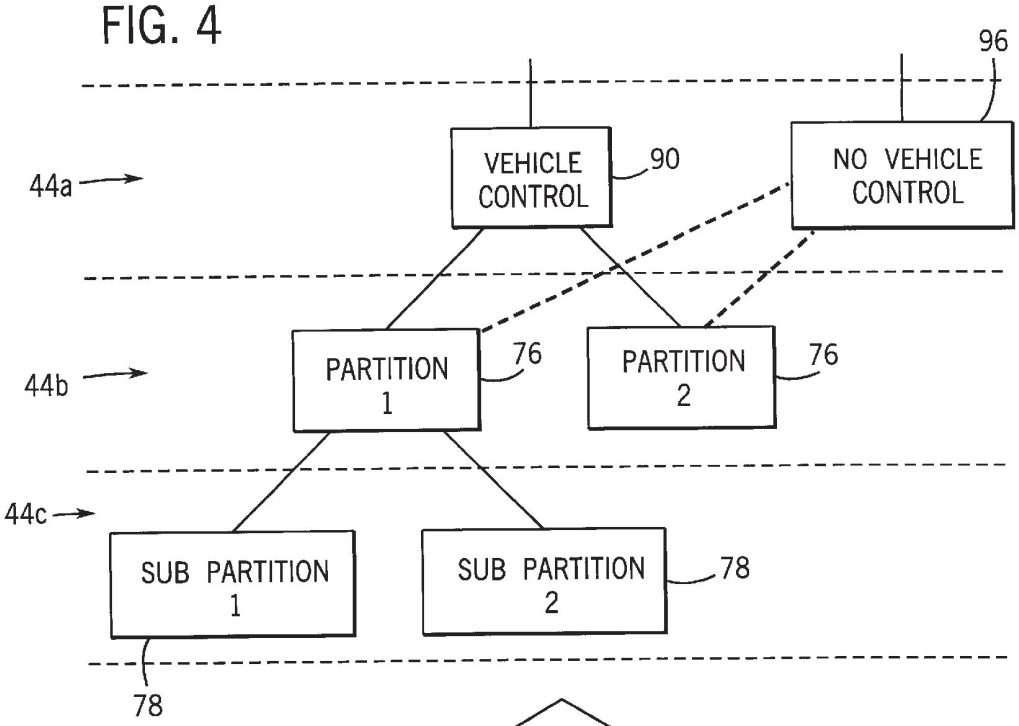

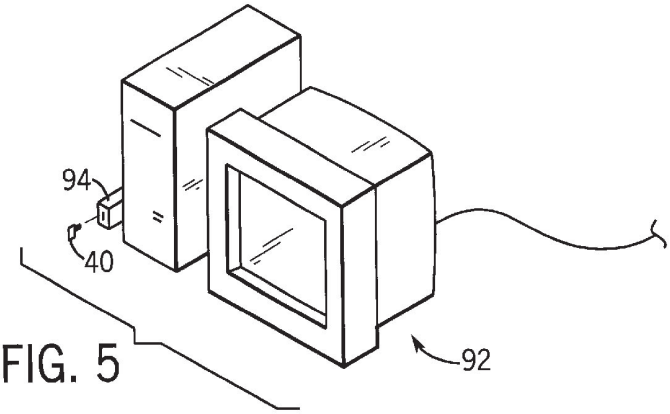

FIG. 5

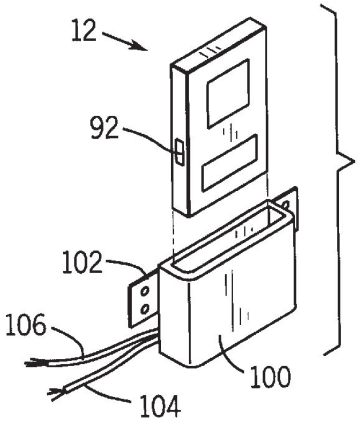

FIG. 6

KEY SECURITY SYSTEM FOR VEHICLE-BASED INFORMATION NODE

CROSS-REFERENCE TO RELATED APPLICATIONS

STATEMENT REGARDING FEDERALLY SPONSORED RESEARCH OR DEVELOPMENT

BACKGROUND OF THE INVENTION

The present invention relates generally to vehicle security systems and specifically to a key-based security system for providing security for data stored in a vehicle.

In traditional "site-based" computing, critical data is protected by locating the computer in a secure location in a building. With local, physical access to the computer limited, unauthorized remote access to the computer's data, say via the Internet, may be prevented by a 'firewall' program or the like.

Advances in computers and in wireless technologies that allow attaching computers to each other have made "site-independent" or mobile computing practical.

One implementation of a mobile computer combines a personal digital assistant ("PDA") with a cellular telephone to provide a hand-held multipurpose computing device.

Such hand-held computing devices have significant shortcomings. First, the computer hardware, and particularly that devoted to human-machine interface, including the keyboards, display, microphones and speakers, must be substantially reduced in size with an unavoidable reduction in capability. Power constraints caused by limitations in battery technology significantly limit the range and operating time of such mobile devices.

In addition, hand-held mobile devices can be inconvenient to carry and to keep track of. Then too, their portability makes them susceptible to being misplaced or stolen and this makes the data stored in these devices insecure.

BRIEF SUMMARY OF THE INVENTION

The present invention offers an alternative model for mobile computing that avoids many of the problems of hand-held computing devices. The invention makes use of the automobile as an "information node" to store data, provide additional computer hardware, and relay information to other locations. As the natural instrument of our mobility, the automobile provides a platform with ample electrical power and hardware carrying capacity to support the most intensive mobile computing needs.

In this capacity, the automobile may be an "end information node" providing a display terminal and input device, or may be an "intermediary information node" for use as a relay by local hand-held or other computing devices. In this latter capacity, the automobile can conserve the operating power and storage capabilities of the local device.

Critical to this use of the automobile as an information node is a reconciliation of divergent levels of authority over the automobile: the authority to operate the vehicle versus the authority to access vehicle information and its information resources. Unfettered use of the vehicle as a mobile computing resource requires security for the data held within the vehicle. The present invention uses the automotive key, a traditional symbol of authority for operating a vehicle to provide selective access both to vehicle functions and to vehicle data or computing capabilities in the form of application programs.

Specifically, the present invention provides a key-based security system for a vehicle usable with a plurality of coded keys, each having a key value. A key switch receives one of the coded keys to provide a signal indicating a key value for the received key, and an engine control module responds to the key value from the key switch to allow starting of an engine of the vehicle when the key value matches a predetermined car authorization value. A data access filter responds to the key value from the key switch to communicate data with an on-board memory when the key value matches the predetermined data authorization value.

Thus it is one object of the invention to provide security for the data held in a vehicle in its role as an information node. Access to data intuitively follows the same paradigm as access to vehicle functions through the use of a key.

The data access filter may encrypt data communicated to the on-board memory and decrypt data communicated from the on-board memory according to the key value.

Thus it is another object of the invention to recognize the problems of data security inherent in any mobile computing platform and to provide a high degree of data security in the event that possession of the vehicle is lost and/or parts are removed from it in an attempt to gain access to the stored data.

The data access filter may provide a local radio link to a portable terminal or connections to on-board terminals or wireless connection to the Internet or the like, or to a remote computer.

It is therefore another object of the invention to provide a means to leverage the functionality of low-powered, hand-held computing devices with the greater power and hardware capacity offered by the automobile as a mobile computing platform.

The security system may include an off-board subsystem activated by a password. Such a subsystem may be, for example, a residential door lock, a debit terminal, a local or long distance information carrier, or a dedicated residential computer system. The on-board memory may contain the password of the subsystem.

Thus it is another object of the invention to allow seamless communication between the automobile as an information node, and a variety of spatially separated computerized devices as activated and possibly linked by the mobile agent of the automobile. In this latter capacity, the automobile may effectively collect and transport information, normally specific to the driver, between local networks. For example, sensitive banking information downloaded to the car may be uploaded to the home computer when the car returns.

The system may include a second key switch receiving one of the coded keys to provide a signal indicating a key value from the received key, where the second key switch communicates with the engine control module so that the engine control module does not respond to the key value from the second key switch that would allow starting of the engine of the vehicle, but wherein the memory access filter responds to the key value from the second key switch to communicate data with the on-board memory only if the data authorization value matches the key code value.

Thus it is another object of the invention to allow remote access of the vehicle stored data through the key-based system without allowing access to the engine control functions, thereby recognizing different levels of authorization for use of the vehicle. Such a key switch may be associated with a home computer, for example, from which vehicle operation functions should not be accessed.

The key may include a first key code field and a second key code field, each holding a key value. The key switch

receiving the coded key may provide a first and second key value of the first and second key code fields of the received key. The engine control module may respond to the first key value to allow starting of the engine of the vehicle when the first key value matches a predetermined car authorization value. The on-board memory may have a plurality of partitions identified, each to different data authorization values and the data access filter may respond to the second key code value to communicate data only with a partition of the on-board memory having a data authorization value matching the second key value.

Thus, it is yet another object of the invention to provide for shared use of the vehicle for different drivers while preserving each driver's exclusive use of the vehicle as an information node. By using keys with identical first key fields and differing second key fields, multiple users of the vehicle may preserve unique data partitions for their data. This allows the use of the vehicle for storage of personal data such as passwords, vehicle preference data and vehicle usage logs.

At least one coded key may also have a third key code field and the partitions on the on-board memory may include sub-partitions identified each to different data authorization values. The data access filter may respond to the third key code value to communicate data only with the sub-partition of the on-board memory having a data authorization value matching the third key value.

Thus it is another object of the invention to provide for a hierarchy of access levels for the memory such as may allow, in effect, a "master key" viewing more than one partition of the on-board memory as may be appropriate in some circumstances.

The foregoing and other objects and advantages of the invention will appear from the following description. In the description, reference is made to the accompanying drawings which form a part hereof, and in which there is shown by way of illustration a preferred embodiment of the invention. Such embodiment does not necessarily represent the full scope of the invention, however, and reference must be made to the claims herein for interpreting the scope of the invention.

BRIEF DESCRIPTION OF THE DRAWINGS

FIG. **1** is a simplified pictorial representation of a vehicle used as a mobile information node providing long distance radio communication with the Internet and local communication with various environmental computers including a portable computing terminal, a kiosk device and a home computer system;

FIG. **2** is a schematic representation of a key used in the present invention providing traditional pin-tumbler mechanism and three key code fields, which may be interrogated electronically;

FIG. **3** is a block diagram of the key-based security system of the present invention showing communication of a key switch with an engine control module and with a data access filter providing access to particular partitions of an on-board memory and further showing communication with a variety of peripheral automotive devices;

FIG. **4** is a graph showing a hierarchy of access authority that may be produced by multiple key code fields in the present invention;

FIG. **5** is a perspective view of a remote computing device with a key switch allowing access to data stored in the vehicle of FIG. **1**; and

FIG. **6** is a perspective view of a cradle for holding a removable computer system suitable for use with the present invention.

DETAILED DESCRIPTION OF THE INVENTION

Referring now to FIG. **1**, a vehicle **10** may include a mobile computing module **12** providing generally a computer system, as will be described in detail below, communicating via a data bus **14** with other components of the vehicle **10** including an engine control module **16**, a key switch **18**, one or more interface terminals **20**, various automotive peripherals **22** (including for example an electronically adjustable seat and rear view mirror); a high powered transceiver **24** and a low-powered transceiver **26**.

The data bus **14** may be any conventional serial digital bus including a CAN link or higher speed computer-type buses such as Universal Serial Bus or Ethernet.

The engine control module **16** provides for real-time control of engine operating parameters, such as is well known in the art, reading a variety of sensors (not shown) measuring engine speed, oxygen and temperature to provide optimal engine performance. In this capacity, the engine control module **16** may disable operation of the automotive engine and other essential automotive features.

The key switch **18** provides a standard mechanical key lock operating an electrical switch as is understood in the art. The key switch **18** also provides an electromagnetic interrogation system allowing additional key codes, in the form of digital words, to be read from the key as stored in digital circuitry in the key, its handle, or a key fob.

The terminals **20** may be conventional computer-type terminals providing a graphics display and/or key pad-type data entry but may also include more sophisticated terminal providing for voice recognition and the like.

The automotive peripherals **22** include standard electrically operated automotive accessories such as provide for the adjustment of the driver and passenger seats (e.g., height, recline, and lumbar support) angle of rear view mirrors, settings of an entertainment center including radio stations and settings for a recorded media player, telephone equipment and navigational equipment including global positioning system receivers.

The high-powered transceiver **24** provides radio satellite or cell telephone-type communication of voice or data via the telephone service or through a connection to the Internet **28** as is understood in the art.

The low-powered transceiver **26** communicates locally over a low-powered radio or light link with nearby hand-held local terminals **30**, environmental computers **32** (such as an ATM kiosk) or a residential computer **34**. The low-powered transceiver **26** may for example use the Blue Tooth standard providing for local, high-speed, spread-spectrum communication of data. However, other communication channels including infrared link may also be used. The local terminal **30** may be a laptop or palmtop computer including, for example, a personal data assistant (PDA). The environmental computer **32** may be a controller for vehicle access (such as in a parking lot or on a toll road) or for any device requiring electronic intercommunication with the vehicle **10** such as may operate on a drive through or drive by basis. The residential computer **34** may be a stand alone, general purpose, personal computer system or may be a home controller allowing a gateway for control of basic home functions including opening and closing of door locks **36** monitoring or programming of thermostatic setting, lighting

and home security systems **38**. Thus, the vehicle **10** provides a mobile platform for computing and for accessing a variety of computer-based systems both locally and through the Internet.

Referring now to FIG. **2**, the vehicle key **40** includes standard wards and notches **42** such as allows rotation of a cylinder in a pin-tumbler-cylinder lock so as to activate a standard electrical switch providing power to the automotive systems as is well understood in the art. As mentioned above, the key **40** also stores an electronically readable data word including three fields **44***a*, **44***b*, and **44***c*, each providing a data word as shown schematically as needed. Such a key **40** may receive power from the key switch **46** from a small battery, electrical contacts communicating with corresponding contacts in **30** the key switch **46**, or via an antenna coupling to an electromagnetic field from the key switch **46**. An internal integrated circuit, upon receiving power, transmits the data from each of the three fields, **44***a*, **44***b*, and **44***c* to the key switch **46**, either through the electrical contracts or a low-powered electromagnetic signal. Other methods of providing the key codes may also be used.

Referring now to FIG. **3**, the key **40**, received by a key switch **46** switches electrical power over line **48** to power vehicle systems according to standard methods. The key switch **46** further transmits data from the data fields **44***a* through **44***c* over additional lines to other automotive components. Data word from field **44***a* is provided to the engine control module **16** which reads the data word **44***a* and matches it with an internal vehicle authorization code to allow engine function only if there is a matching between the code of field **44***a* and the internal engine authorization code of the engine control. If such a matching occurs, the engine control module **16** provides the necessary electrical signals to the engine **50** so that it may be started and may run in an ordinary fashion. Momentary operation of the engine may be permitted even without matching of the authorization code.

Data words **44***b* and **44***c* (and possibly **44***a*) are provided to the mobile computing module **12** which includes generally a memory **60**, a processor **70** and memory access filter **52**.

The memory **60** may include random access memory (RAM) or its equivalent or disk drives or other mass storage devices and is divided generally into two portions **62** and **64** by a firewall **66** of a type well known in the art. The firewall is implemented generally in a software operating system program **68** held in memory **60**.

The first portion **64** of the memory **60**, depicted to the right of the firewall **66** may be freely accessed by the processor **70** and, through operation of the operating system **68**, by other devices communicating with the processor **70** via public bus **72**. Thus the first portion **64** of the memory **60** represents a public area of the memory **60**.

The second portion **62** of the memory **60** may only be accessed through the memory access filter **52** communicating with the memory via secure bus **84**. The operation of the memory access filter **52** will be described in more detail below. The memory access filter selectively communicates data from the second portion **62** over public bus **72** with the processor **70**.

Both the processor **70** and the memory access filter **52** use the public bus **72** to also communicate with I/O circuitry **74**. Generally, the processor **70**, executing programs stored within memory **60**, may read or write data from or to the I/O circuitry **74** so as to communicate with other components of the vehicle **10**. Direct access of the memory **60** may also be preformed through the public bus **72** either via the memory access filter **52** to the second portion **62** or directly.

Referring still to FIG. **3**, the second portion **62** of the memory **60** is partitioned into primary partitions **76** and sub-partitions **78** the latter being parts of primary partitions **76**. Each primary partition **76** and sub-partitions **78** is associated with a data authorization value stored in a table **80** linking memory addresses of particular primary partitions **76** and sub-partitions **78** to particular data authorization values. Access to a particular primary partition **76** and sub-partition **78** will be allowed by memory access filter **52** only if the one of the data fields **44***a*–**44***c* match the authorization code of that primary partitions **76** or sub-partitions **78**. The sub-partitions **78** may store not only data but also application programs that may be desirable to have it accessible to one user and not to others.

Specifically, the data values **44***a*–**44***c* are received by a selector **86** in the memory access filter **52**, which reads the data values and matches them to entries in table **80** to control the connection of secure bus **84** only to the appropriate partitions. Addresses of the secure bus **84** outside the range of the partition are suppressed. The selector also provides the data values **44***a*–**44***c* to an encryption engine **82** which encrypts and decrypts all data passing between it and the memory **60** so that the data in the second portion **62** of memory **60** is encrypted using the key of the appropriate data field **44***a*–**44***c*.

In a first embodiment, a single authorization value is used equal to the first data field **44***a*. Thus, access is provided to all primary partitions **76** and sub-partitions **78** when the proper key **40** is inserted into the key switch **46**. This creates a single hierarchy of data access, where anyone authorized to drive the car has access to the data of memory **60**.

In a second embodiment, the second data field **44***b* and third data field **44***c* are received by a selector **86** with the second data field **44***b* identifying the primary partitions **76** and the third data field identifying the sub-partitions **78** to which authorization may be had. Any or all of the data fields may be used as the encryption/decryption values provided to the encryption engine. In the event that a third data field **44***c* is not provided, access may be granted to the entire partition indicated by second field **44***b*. Thus a master key may be created establishing a hierarchy of control.

Referring now to FIG. **4** at the first level of the hierarchy, data field **44***a* provides access to vehicle control indicated by function block **90**. Field **44***b* provides a second level of hierarchy under the vehicle control wherein access to vehicle control is provided and access to particular primary partitions **76**, denoted **1** or **2** shown in FIG. **4**. Data field **44***c* provides a third level of the hierarchy in which access only to a single sub-partition **78** within primary partition **76** is provided. In this way, a master key may be created having access to multiple sub-partitions while other keys are directed to a single sub-partition. Thus, for example, each driver in a family may be given access to one sub-partition with a regular key. Access to multiple partitions or sub-partitions for service or reprogramming may be provided through the use of a master key omitting data field **44***b* or **44***c*. Alternatively, special values of data field **44***b* or **44***c* may be used indicating unrestricted partition and sub-partition access. In this way a "valet key" may be provided having access to vehicle functions but not to data.

Referring again to FIG. **3**, as mentioned above, the secure bus **84** passes through the encryption engine **82** which may optionally encrypt all data passing from the processor **70** or

I/O **74** to a sub-partition **78** or decrypt data previously stored in a sub-partition **78** for use by the I/O **74** or processor **70**. Thus, it will be understood that the key **40** provides not only access to traditional engine and vehicle features but also provides security for the data that may be stored on the car in its use as a mobile computing platform.

With security provided to the data of the automobile, the automobile's role in mobile computing may be increased.

EXAMPLE 1

Password Encoding

A number of transactions in mobile computing require positive identification of the user. This can be done through the use of a personal identification number (PIN) or password. The password may be stored on the user's terminal as often done in the context of Internet communications through the use of a "cookie". The present invention may provide this functionality in a shared vehicle **10** by storing these password values in a sub-partition **78** only accessible under the implicit authority of the user inserting the key **40** into the key switch **46**. Thus transactions with environmental computers such as those which provide access to parking lots, toll road, banking services and the like may make use of password identified transactions for the purpose of conveying identity and standard information in the transaction thus reducing the burden on the user.

Similarly, a residential computer **34** may be automatically activated based on knowledge of the identity of the user of the vehicle contained in the sub-partition **78** in the form of a password or other identifying device. A direct link via low-powered transceiver **26** with the residential computer **34** may be used to automatically open garage doors, light lights and unlock doors under password control. The password may also be used for entering a programming mode for essential house functions remotely from the vehicle **10** or other transactions through the link of high-powered transceiver **24**.

EXAMPLE 2

Engine Monitoring

The partitioning system of the present invention, as well as providing security for personal data, may provide an identified location for logging vehicle use of data specific to the user as identified by the data fields of the user's key, although not necessarily of a confidential nature. For example, for fleet use, the engine operation may be monitored and logging of the history of usage may be stored in a sub-partition **78** identified to a particular user through the key **40**. A master key may be used to read several sub-partitions **78** for the purposes of reading this logged data. Such data may include miles driven or even location as provided by GPS-type receivers.

EXAMPLE 3

Personality Modules

The data stored in each sub-partition **78** may include settings for the automotive peripherals **22** for example the seat height, and extension and reclining angle, the radio stations desired to be associated with pushbuttons on the radio, radio volume, tone settings, speed dial lists for a standard cell phone associated with the vehicle, mirror and other personality settings for the car. Thus insertion of the key **40** into the key switch **46** may automatically personalize the car to the particular user based on the partitioning in the memory.

EXAMPLE 4

Remote Vehicle Access

As well as providing for a platform for mobile computing, the power and carrying capacity of the vehicle **10** make it valuable as a relay or peripheral for smaller powered local terminals **30**. Such local terminals **30** may communicate data through a local link of low-powered transceiver **26** to the vehicle **10** and the higher-powered transceiver **24**. Such local terminals **30** may also be site-specific device terminals **92** as shown generally in FIG. **5** allowing, for example, a home based PC computer to make use of the car's subsystems for connection to the Internet or the like. Remote programming and monitoring of the vehicle may be provided by site specific terminals **92** by addition having a second key switch **94** for receiving key **40** to gain access for particular sub-partitions **78** of the memory **60**. Such second key switches **94** provide information either through the blocking of key field **44***a* or blocking additional information normally provided by key switch **46**, which prevents starting of the engine **50** through the engine control module **16**. Referring again to FIG. **4**, in this way a new root **96** in the hierarchy is established providing remote access to the memory system of the vehicle only, without access to vehicle functions, may be easily provided on a secure basis. The key switch **94** is preferably similar in design to the key switch **46** but may omit the mechanical aspects of the key switch **46**.

In alternative embodiments, the key switch **94** may be an alternative personal identification system and need not necessarily require the key **40**.

Referring now to FIG. **6**, although it is likely that the memory **60** of the mobile computing module **12** will be integrally attached to the vehicle, the present invention is equally applicable to systems where the mobile computing module **12** or a portion of it may be removed from the vehicle **10** and the vehicle **10** provides simply a base of power, interface and communication. In such cases, all or a portion of the mobile computing module **12** may be received by cradle **100** attached to the vehicle by a mounting bracket **102** and having connector leads providing for power over lead **104** and data transmission over lead **106** of public bus **72**. When the entire mobile computing module **12** is removable, a second key switch **94** in the mobile computing module **12** would provide access to the encrypted and keyed partitions.

The above description has been that of a preferred embodiment of the present invention. It will occur to those that practice the art that many modifications may be made without departing from the spirit and scope of the invention. For example, foreseeable advances in technology may change the form of keys and therefore the term key should be held to include similar devices including "credit card"-type keys and those using transponders and the like. Further, the invention may be extended to include nontransferable personal identification using retinal, fingerprint or voice identification. In order to apprise the public of the various embodiments that may fall within the scope of the invention, the following claims are made.

NUMBER LIST	
10	automobile
12	mobile computing module
13	computer program
14	data bus
16	engine control module

-continued

NUMBER LIST	
18	key switch
20	terminals
22	automotive peripherals
24	transceiver
26	low-powered transceiver
28	Internet
30	local terminal
32	environmental computer
34	residential computer
36	door locks
40	key
42	notches
44	I/O circuitry
46	key switch (see also #40)
48	line
50	engine
52	memory access filter
60	memory
62	second portion
64	first portion
66	firewall
68	operating system
70	processor
72	public bus
74	I/O circuitry (see also #44)
76	primary partition
78	sub-partitions
80	table
82	encryption engine
84	secure bus
86	selector
90	function block
92	terminals
94	key switch (see also #46)
96	new root
100	cradle
102	mounting bracket
104	lead
106	lead

I Claim:

1. A key-based security system for a vehicle usable with a plurality of coded keys each having a key value, the security system comprising:

first and second key switches each capable of receiving one of the coded keys to provide a signal indicating a key value of the received key;

an engine control module responding to the key value from the first key switch but not the second key switch to allow starting of an engine of the vehicle when the key value matches a predetermined car authorization value;

an on-board memory; and

a memory access filter responding to the key value from one of the key switches to communicate data with the on-board memory when the key value matches a predetermined data authorization value.

2. The key-based security system of claim **1** wherein the memory access filter, when the key value matches the data authorization value, encrypts data communicated to the on-board memory and decrypts data communicated from the on-board memory according to the key value.

3. The key-based security system of claim **1** wherein the memory access filter provides a local radio link to a portable terminal.

4. The key-based security system of claim **1** wherein the memory access filter provides a connection to at least one on-board terminal.

5. The key-based security system of claim **1** wherein the local memory access filter provides a wireless connection to the Internet.

6. The key-based security system of claim **1** wherein at least one of the key switches includes a pin and tumbler mechanism reading at least a portion of the key code from a mechanical interaction of the key with the associated key switch.

7. The key-based security system of claim **1** wherein at least one of the key switches includes an electromagnetic reader reading at least a portion of the key code from a circuit contained in the key.

8. The key-based security system of claim **1** wherein the second key switch communicates via a wireless link with the vehicle.

9. The key-based security system of claim **1** including further an off-board subsystem activated by a password and wherein the on-board memory contains a password.

10. The key-based security system of claim **9** wherein the off-board subsystem is selected from the group consisting of: a residential door lock, a debit terminal, a long distance phone system, an internet service provider, and a dedicated residential computer.

11. The key-based security system of claim **1** wherein the memory contained an executable file of a computer program.

12. The key-based security system of claim **1** wherein the on-board memory is received within a cradle attached to the vehicle to be removable from the vehicle.

13. A key-based automotive security system for a vehicle usable with a plurality of coded keys having a first key code field and a second key code field each holding a key value, the security system comprising:

a key switch receiving one of the coded keys to provide a first and second key value of the first and second key code fields of the received key;

an engine control module responding to the first key value to allow starting of an engine of the vehicle when the first key value matches a predetermined car authorization value;

an on-board memory having a plurality of partitions identified each to different data authorization values; and

a memory access filter responding to the second key code value to communicate data only with a partition of the on-board memory having a data authorization value matching the second key value;

whereby multiple keys all allowing starting of the engine nevertheless provide access to different partitions of the on-board memory;

wherein at least one coded key also has a third key code field, the partitions of the on-board memory include sub-partitions identified each to different data authorization value, and the memory access filter responds to the third key code value to communicate data only with the sub-partition of the on-board memory having a data authorization value matching the third key value.

14. The key-based security system of claim **13** wherein the vehicle provides electronically adjustable occupant devices and wherein the partitions of the on-board memory hold preference setting for these occupant devices.

15. The key-based security system of claim **14** wherein the occupant devices include electronically adjustable seats, electronically adjustable mirrors, and electronically adjustable entertainment terminal settings.

16. The key-based security system of claim **13** wherein the partitions of the on-board data hold data describing a history of operation of the car while the key is in the key switches.

* * * * *