IN THE UNITED STATES DISTRICT COURT
FOR THE EASTERN DISTRICT OF TEXAS
MARSHALL DIVISION

FRACTUS, S.A., **v.** **ADT LLC d/b/a ADT SECURITY SERVICES**	§ § § § § § §	**Civil Action No. 2:22-cv-00412-JRG** **(Lead Case)** Jury Trial Requested
FRACTUS, S.A., **v.** **VIVINT, INC.**	§ § § § § § §	**Civil Action No. 2:22-cv-00413-JRG** **(Member Case)** Jury Trial Requested

FRACTUS'S OPENING CLAIM CONSTRUCTION BRIEF

Table of Contents

Page

I. INTRODUCTION 1

II. AGREED CONSTRUCTION 2

III. DISPUTED TERMS FOR CONSTRUCTION 2

A. Device terms 2

B. "common conductor" 5

C. "perimeter" 7

IV. TERMS CONTENDED TO BE INDEFINITE 10

A. "not similar/in shape/in size" 10

B. "close proximity region" terms 14

C. "hole(s) intersects the (external) perimeter" 16

D. "4G communication standard / communication standard(s)" and "receive signals from a 4G communication standard" 17

E. "complexity factor" 21

F. "grid-dimension curve" 27

V. CONCLUSION 30

TABLE OF AUTHORITIES

Page(s)

Cases

ACQIS LLC v. Appro Intern., Inc.,
No. 6:09-cv-148, 2010 WL 3057371 (E.D. Tex. Aug. 2, 2010).....12

Allergan Sales, LLC v. Lupin Ltd.,
No. 2:11-cv-530-JRG, 2013 WL 4519609 (E.D. Tex. Aug. 21, 2013) 14

Allergan Sales, LLC v. Sandoz Inc.,
No. 2:12-cv-207-JRG, 2016 WL 1224868 (E.D. Tex. Mar. 29, 2016).....14

Ball Metal Beverage Container Corporation v. Crown Packaging Technology, Inc.,
2020 WL 7828776 (Fed. Cir. 2020).....22, 28

Big D Indus., Inc. v. Fresh Products, Inc.
No. 21-cv-211-F, 2022 WL 1017908, (W.D. Okla. Apr. 5, 2022). 10

Celltrace LLC v. AT & T Inc.,
No. 6:09-cv-294-LED-JDL, 2011 WL 738927 (E.D. Tex. Feb. 23, 2011) 18

Fractus, S.A. v. Samsung Elecs. Co.,
No. 6:09-cv-00203, 2010 WL 5287531 (E.D. Tex. Dec. 17, 2010) 13

Iconfind Inc. v. Yahoo! Inc.,
No. 09-cv-109 WBS-JFM, 2009 WL 8454648, (E.D. Cal. Dec. 14, 2009).....13

Innogenetics N.V. v. Abbott Labs.,
512 F.3d 1363 (Fed. Cir. 2008).....18

Innovative Display Technologies, LLC v. Hyundai Motor Co., et al.,
No. 2:14–cv–201–JRG, Docket No. 244 (E.D. Tex. May 4, 2015).....16

McRO, Inc. v. Bethesda Softworks, LLC,
No. 12-cv-1509-LPS-CJB, 2017 WL 2483697 (D. Del. June 8, 2017).....13, 16, 17, 20

Medtronic Sofamor Danek USA, Inc. v. Globus Med., Inc.,
No. 06-cv-4248, 2008 WL 732022 (E.D. Pa. Mar. 18, 2008), *aff'd sub nom. Warsaw Orthopedic, Inc. v. Globus Med., Inc.*, 416 F. App'x. 67 (Fed. Cir. 2011) 10

Paymaster Techs., Inc. v. United States,
54 Fed. Cl. 579 (Fed. Cl. 2002) 10

Phillips v. AWH Corp.,
415 F.3d 1303 (Fed. Cir. 2005).....1

Semcon IP Inc. v. ASUSTeK Computer, Inc.,
No. 2:18-cv-00193-JRG, 2019 WL 3063590 (E.D. Tex. July 10, 2019).....1, 2

United Access Techs., LLC v. AT&T Corp.,
757 F. App'x 960 (Fed. Cir. 2019) 21

V-Tech Patents, L.L.C. v. Carlisle Syntec, Inc.,
No. 11-cv-0310, 2012 WL 13075455 (S.D. Tex. Apr. 23, 2012).....12

I. INTRODUCTION

Fractus, the plaintiff and original assignee of these patents, is a company specializing in advanced antenna technologies. Based in Barcelona, Spain, Fractus has designed antennas for many companies and has also obtained over $170M in revenue for licensing its technology.

This case involves 5 patent families (and a total of 9 patents).

- The "**antennas with one or more holes**" family contains two patents: Nos. 7,471,246 (Exhibit 9, ADT only), and 7,907,092 (Exhibit 7, both Defendants);
- The "**coupled multiband antennas**" family contains three patents: Nos. 8,994,604 (Exhibit 2, Vivint), 10,135,138 (Exhibit 15, Vivint), and 10,468,770 (Exhibit 14, Vivint);
- The "**multiband monopole antenna for a mobile communications device**" family contains one patent: No. 8,674,887 (Exhibit 5, ADT);
- The "**multiband monopole antenna for mobile communications devices**" family contains one patent: No. 8,456,365 (Exhibit 6, ADT); and
- The "**multiple-body-configuration multimedia and smartphone multifunction wireless devices**" family contains two patents: Nos. 8,738,103 (Exhibit 3, both), and 11,349,200 (Exhibit 11, both).

Vivint and ADT collectively offer overly narrow and unnecessarily confusing constructions for three groups of terms and challenge six more groups of terms as indefinite. For the terms for which Defendants offer definitions, the patents' specifications and prosecution histories, as well as Fractus's extrinsic evidence, confirm the accuracy of Fractus's constructions. *See Phillips v. AWH Corp.*, 415 F.3d 1303, 1312 (Fed. Cir. 2005). For the terms Defendants contend to be indefinite, the patents provide clear standards and measurements with "objective boundaries for those of skill in the art" to use when determining the scope of the terms. *Semcon IP Inc. v. ASUSTeK Computer, Inc.*, No. 2:18-cv-00193-JRG, 2019 WL 3063590, *5 (E.D. Tex. July 10, 2019). In addition, unrebutted extrinsic evidence—including the expert declaration of Dr. Stuart Long—confirms that persons of ordinary skill in the art ("POSITA(s)") were capable of

understanding the terms as of the patents' effective filing dates. *See id.* As such, Defendants cannot carry their burden to show any indefiniteness by clear and convincing evidence. *Id.* at *4. The terms with proposed constructions are briefed first and the supposedly indefinite terms second.

II. AGREED CONSTRUCTION

Term to be Construed	Parties' Agreed-Upon Construction
"space-filling curve" • '887 Patent, claims 1, 2, 4, 5, 7, 14, 16, 18	"A curve characterized by at least ten segments that are shorter than a tenth of a free-space operating wavelength of the multi-band antenna, each of the segments being connected to its neighboring segments at an angle such that no pair of adjacent segments defines a longer straight segment, wherein any periodicity of the space-filling curve along a fixed straight direction of space involves a periodic structure having a period defined by a non-periodic curve comprising at least ten connected segments in which no pair of adjacent ones of the connected segments defines a longer straight segment."

III. DISPUTED TERMS FOR CONSTRUCTION

A. Device terms

Term to be Construed	Fractus's Construction	Defendants' Construction
"wireless device" • '092 Patent all asserted claims; • '103 Patent all asserted claims; • '200 Patent all asserted claims	Fractus: No construction necessary.	"A device with the ability to transmit and receive voice, data, or video signals through the radio spectrum that does not require a physical wire to operate adapted to permit running of word-processing, spreadsheet, and slide software applications. Alternatively: "The plain and ordinary meaning, which is a device that does not require a physical wire to operate while being carried or moved."

Term to be Construed	Fractus's Construction	Defendants' Construction
"mobile communication device" • '887 Patent, all asserted claims; • '365 Patent, all asserted claims	Fractus: No construction necessary.	"A device with the ability to transmit and receive voice, data, or video signals through the radio spectrum that does not require a physical wire to operate adapted to permit voice communication capabilities, on board sensors that allow the device to capture (e.g., photograph, video, record, or determine location) information, and/or built-in features for synchronizing local data with remote locations." Alternatively: "The plain and ordinary meaning, which is a device that does not require a physical wire to operate while being easily carried or moved from one location to another."[1]
"wireless portable device" • '604 Patent, all asserted claims		

Defendants offer several definitions, all of which suffer from the fatal flaw of requiring that the device be able to operate without a wire. Defendants proposed construction ignores the simple fact that what makes a device "wireless" or makes it a "mobile communication" device is that the device communicates—*i.e.*, sends and receive signals—without the use of a physical connection.

Dr. Long explained why Defendants are incorrect in his declaration: "That a device requires a power cable, for example, does not mean that is not wireless." Ex. 1 ¶ 40. Defendants have no evidence to contradict this obvious conclusion. Indeed, their proposed definition would rule out whole classes of devices that are understood to be wireless devices such as routers and

[1] This alternate definition is offered by Defendants only for the "wireless portable device" term.

computers. The patents themselves specifically note that wireless devices come in many shapes and sizes but are not restricted to devices that can only operate without wires. *See* Ex. 2 at 5:3–11 ("In particular, the antennas can be integrated in handheld terminals (cellular or cordless telephones, PDAs, electronic pagers, electronic games, or remote controls), in cellular or wireless access points (for instance for coverage in micro-cells or pico-cells for systems such as AMPS, GSM850, GSM900, GSM1800, UMTS, PCS1900, DCS, DECT, WLAN, in car antennas, in integrated circuit packages or semiconductor devices, in multichip modules, and so on."). Wireless access points, for example, need to maintain electrical connections for power but still provide wireless communications. They also make it clear that the "wireless" feature refers to connectivity, not the complete absence of all wires. Ex. 3 at 4:65–67 ("One problem to be solved by the present invention is therefore to provide an enhanced wireless connectivity."). In fact, one of Defendants' own dictionary definitions contracts the construction they offer here: "wireless device – a device that communicates in a wireless manner."[2] Ex. 4 at 6 (*Wiley Electrical and Electronics Engineering Dictionary*, 865 (2004) VIVINT0002632).

There are additional problems with Defendants' proposed constructions. Each of their primary proposed constructions requires additional capability that exceeds what is required for a "wireless device"—either "adapted to permit running of word-processing, spreadsheet, and slide software applications" or "on board sensors that allow the device to capture (e.g., photograph, video, record, or determine location) information." Defendants appear to be attempting to import restrictions from other aspects of the claims, for example, that the '103 Patent recites a

[2] If the Court thinks the terms should be construed beyond the plain and ordinary meaning, it should define the terms as Dr. Long suggests: a device "capable of communicating via electromagnetic waves through the air" and a "a device capable of communicating using mobile communication technology." Ex. 1 ¶ 40.

"multifunction wireless device." But the multifunctionality requirement is a separately delineated part of the claim—it is not an issue for the Court to decide at claim construction.

Similarly, for the patents that relate to the "mobile communication device" terms, Defendants want to include a requirement that the device be "adapted to permit voice communication capabilities." The patents, however, identify some mobile communication devices that have this ability and some, "such as Personal Digital Assistants … and pagers" that do not. Ex. 5 at 1:28–31.

There is no need for the Court to provide a construction of these terms, and Dr. Long agrees that it is not necessary to construe them because a POSITA would understand their plain and ordinary meaning without elaboration. Ex. 1 ¶ 40.

B. "common conductor"

Term to be Construed	Fractus's Construction	Defendants' Construction
"common conductor" • '887 Patent, claims 1, 14; • '365 Patent, claims 1, 37	No construction necessary.	"A contiguous conductive element having at least a first and second radiating arm each originating from discrete points along the perimeter of the contiguous conductive element."

Defendants' proposed definition is nonsensical, contradicts the teachings of the patents, and is unsupported by any expert testimony. The Court should reject it and find that no construction is necessary.

First, Defendants' definition begins in confusion with the phrase "[a] contiguous conductive element." Defendants' definition never specifies what the conductive element is "contiguous" to or with. Is it the ground plane? Communications circuitry? Some other element present in the devices in question? Defendants' definition is silent and will make it harder, not easier, to understand how this term should be understood.

Second, Defendants' definition would have the common conductor *include* the two radiating arms: "[a] contiguous conductive element *having at least a first and second radiating arm* . . ." This is flatly inconsistent with the '887 and '365 patents, which make clear that the two radiating arms are distinct from the common conductor. The specifications state that "the first radiating arm includes a meandering section" which extends "away from the common conductor," and "the second radiating arm" includes portions that extend "away" from the common conductor. Ex. 5 at 2:61–63, 3:17–33; Ex. 6 at 3:1–3, 3:24–40. The figures in the patents—and their accompanying description—similarly demonstrate that the common conductor does not include the radiating arms.

For example, the patents describe Figure 3, reproduced here as a "multi-band monopole antenna . . . includ[ing] a common conductor [labeled with 52 in the figure] coupled to a first radiating arm [labeled 54] and a second radiating arm [labeled 56.] The common conductor [labeled 52] includes a feeding port [labeled 62] on a linear portion of the common conductor [labeled 52] that extends horizontally (as viewed in FIG. 3) away from the radiating arms [labeled 54 and 56.]" Ex. 6 at 4:6–12.

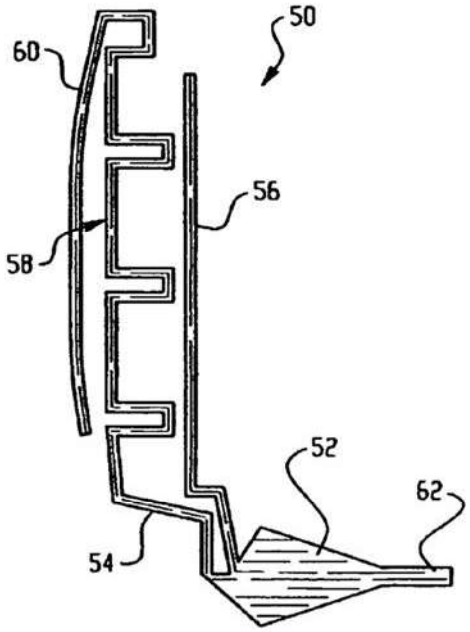

Fig. 3

Figure 3—and the surrounding Figures 4, 5, and 6 which have essentially identical "common conductors" separate from their radiating arms—thus directly contradict Defendants' claim that the common conductor includes either radiating arm, much less both.

Dr. Long's expert declaration identifies this basic error in Defendants' proposed definition, stating emphatically that "the common conductor *does not* have first and second radiating arms." Ex. 1 ¶ 41 (emphasis added).

Defendants' definition also appears to conflate "common conductor" with "antenna element." The patents have no such conflation; while an "antenna element" may include "a first radiating arm," a "second radiating arm," *and* a "common conductor," *see, e.g.,* Ex. 6 at 10:31–36, the common conductor is a separate component from the two arms and only one part of the antenna element as a whole.

Third, Dr. Long's declaration confirms the inadequacy of Defendants' proposed definition and that a POSITA would not need a specific construction to understand the meaning of "common conductor." Dr. Long states that the ordinary meaning of "common conductor" is just the "part of a conducting radiating structure coupled to the feeding point that carries current to multiple portions (or arms or branches) of the radiator." Ex. 1 ¶ 41. This is, as outlined above, entirely consistent with the patents' text and entirely inconsistent with Defendants' definition. [3]

Because it is contradicted by both the intrinsic and extrinsic evidence, the Court should reject Defendants' proposed definition for "common conductor."

C. "perimeter"

Term to be Construed	Fractus's Construction	Defendants' Construction
"perimeter" • '092 Patent claims 1, 11, 12, 26; • '103 Patent claim 12; • '200 Patent claims 1, 3, 6, 9, 11	No construction necessary.	"The continuous line forming the boundary of a closed geometric figure."

[3] Should the Court find that this term requires construction, the Court should adopt the definition for "common conductor" contained in Dr. Long's declaration: "the part of a conducting radiating structure coupled to the feeding point that carries current to multiple portions (or arms or branches) of the radiator." Ex. 1 ¶ 41.

Defendants propose to artificially limit a perimeter to a "closed geometric figure" formed by a "continuous line." Those requirements are incorrect, as demonstrated by the patents, the declaration of Dr. Long, and caselaw. No construction is necessary for this easily understood term.

The problem with Defendants' proposed construction is that it contradicts the teachings of the patent. Case 13 of Figure 3 in the '092 Patent "shows a multihole antenna with a circular hole, wherein the hole intersects the perimeter of the radiating element at a distance to the feeding point shorter than a quarter, or longer than three quarters, of the external perimeter of the radiating element." Ex. 7 at 2:63–67; Ex. 10 at 43:16–44:6:

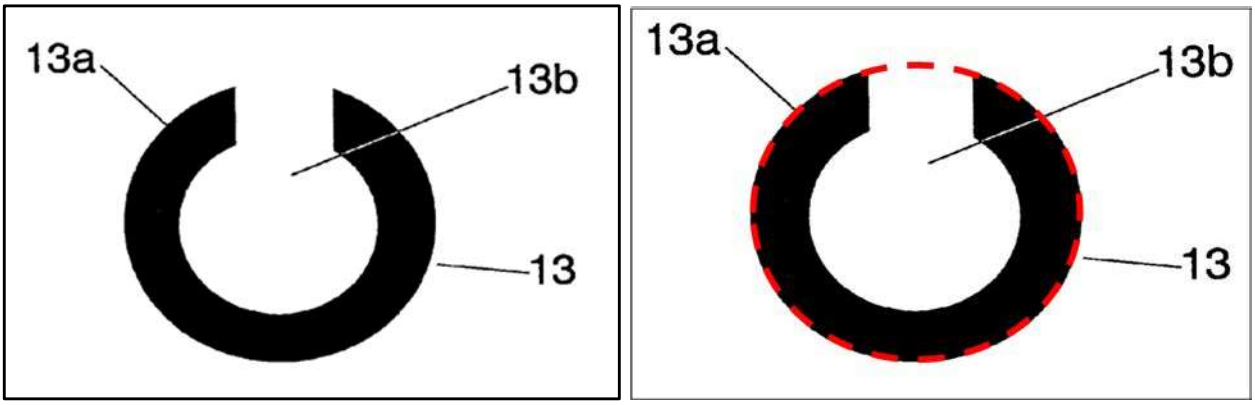

See also Ex. 3 at Figs. 4, 12a, and 17h. As demonstrated by the image on the right, the perimeter is simply the extension of the outside of the radiating element to complete the circular shape. The image below, in contrast, was drawn by Vivint's counsel and appears to be defendants' preferred interpretation of the term, but as the annotation shows, there is no intersection (Ex. 16):

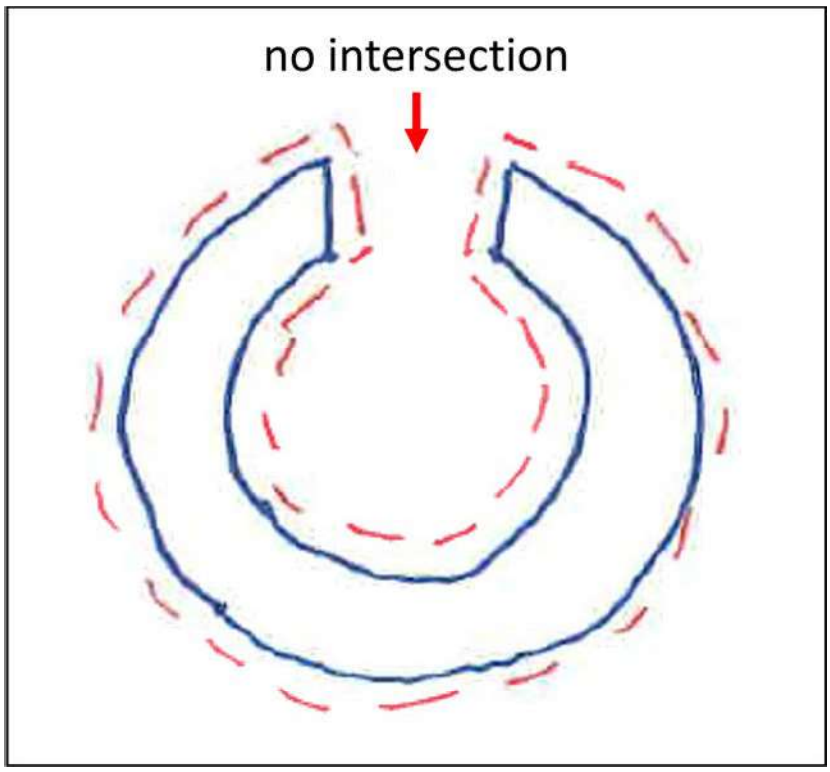

But this interpretation makes no sense in light of the patent, because then there would be *no intersection at all* between the hole and the external perimeter. In other words, the external perimeter can include a shape with a hole—and thus need not be a closed figure. That also comports with one of the definitions noted by Defendants in the Local Rule 4-3 submission from the *Pocket Oxford English Dictionary*: "the outermost parts or boundary of an area or object." Ex. 8 at 4 (p. 667, (2005) FRAC-VIVINT-00231545).[4].

As Dr. Long noted in his declaration, a perimeter in the context of these antenna patents refers to the "boundary" of a shape or object.[5] Ex. 1 ¶ 39. A POSITA can determine the perimeter of the radiating element by following the shape of the radiating element and extending it as

[4] The corresponding ADT bates number is FRAC-ADT-00459164.
[5] If the Court thinks the term should be construed more than just the plain and ordinary meaning, it should define the term as Dr. Long suggests: "the boundary of a shape or object." Ex.1 ¶ 39.

necessary to complete the boundary if, in the context of the '092 Patent, there is a hole that intersects with the external perimeter.

Other courts that have construed the term have similarly rejected defendants' proposed construction. Faced with competing proposals about the construction of "perimeter," a court rejected the exact same language that defendants propose here and after noting there are many definitions of the term and reviewing the patent and file history, concluded that perimeter meant "the outer boundary of a surface or area." *Medtronic Sofamor Danek USA, Inc. v. Globus Med., Inc.*, No. 06-cv-4248, 2008 WL 732022, *21 (E.D. Pa. Mar. 18, 2008), *aff'd sub nom. Warsaw Orthopedic, Inc. v. Globus Med., Inc.*, 416 F. App'x. 67 (Fed. Cir. 2011). In *Big D Indus., Inc. v. Fresh Products, Inc.*, the court concluded that "perimeter" should be given its plain and ordinary meaning. No. 21-cv-211-F, 2022 WL 1017908, *2 (W.D. Okla. Apr. 5, 2022). Indeed, while applying Federal Circuit law to construe "perimeter," the Court of Federal Claims noted that a "claim term's ordinary meaning controls unless the intrinsic evidence clearly redefines the claim term so as to put one reasonably skilled in the relevant art on notice that plaintiff intended to assign the term a different meaning" and held that nothing in intrinsic evidence required deviation from the ordinary meaning. *Paymaster Techs., Inc. v. United States*, 54 Fed. Cl. 579, 588 (Fed. Cl. 2002). That is true here too and the Court should give "perimeter" is plain and ordinary meaning.

IV. TERMS CONTENDED TO BE INDEFINITE

A. "not similar/in shape/in size"

Term to be Construed	Fractus's Construction	Defendants' Construction
"not similar/in shape/in size" • '092 Patent, claim 1; • '246 Patent, claims 13, 15, 30	Not indefinite. No construction necessary.	Indefinite

ADT and Vivint both assert this term is indefinite. As with all the terms for which they claim indefiniteness, Defendants offer no supporting expert declaration. Their position here appears to be that the use of "not similar" supposedly means that a skilled artisan would not be able to determine objectively whether shapes or sizes are "similar." That is incorrect, as is demonstrated by the patents, the caselaw, and the unrebutted declaration of Fractus's expert Dr. Stuart Long.

Regarding "shape," the asserted claim of the '092 Patent compares the shape of two polygons—one comprising the external perimeter of the radiating element and the second a hole in the radiating element. Ex. 7, Claim 1. The claims of the '246 Patent compare the shapes of two holes in the radiating element. Ex. 9, Claims 13, 30 . These two patents share a specification, which illustrates what can constitute different (*i.e.*, not "similar") shapes. Case 14 of Figure 3 of the '092 Patent provides an example of a radiating element (in black) composed by a rectangular and circular shape and two holes (in white) that are circular shaped (14b) and shaped by means of a multilevel structure (14c) (Ex. 7 at 2:67–3:4):

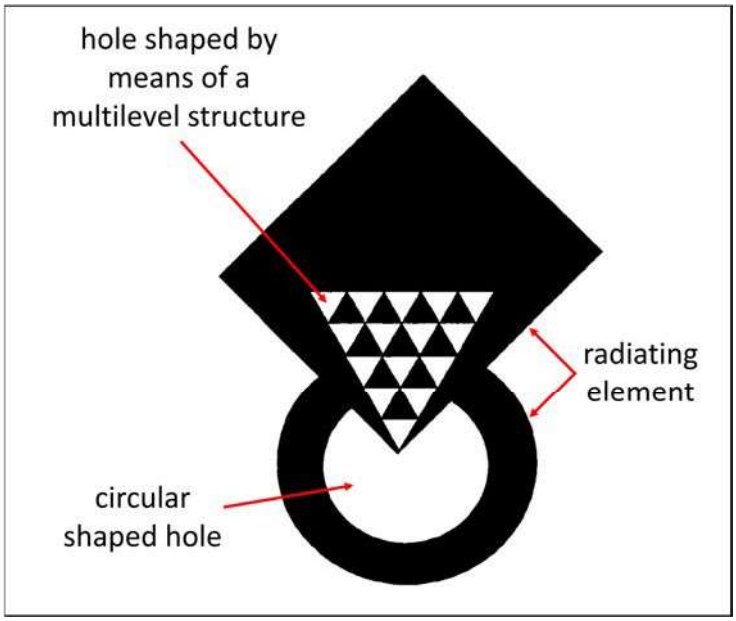

A POSITA would understand that the significantly dissimilar shape of the radiating element and the inclusion of the holes would permit multifrequency behavior in a smaller sized antenna that could be operated at lower frequencies than previous antennas. Ex. 7 at 1:64–2:27.

Regarding "size," this term is only found in Claim 15 of the '246 Patent, which again compares two holes. Ex. 9, Claim 15. Figure 1 shows the radiating elements as black circles and demonstrates not similarly sized holes, 1b, 2b, and 3b, *id.* Figure 1:

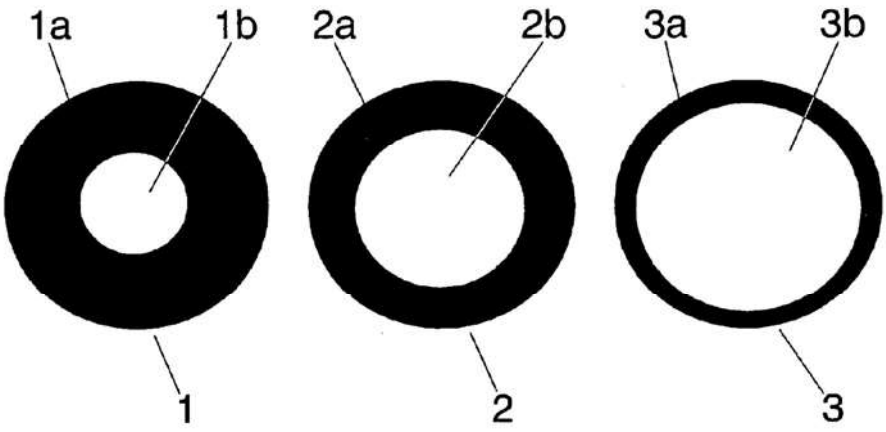

Numerous courts have concluded that the use of the term "similar" does not render a claim indefinite. For example, in *V-Tech Patents, L.L.C. v. Carlisle Syntec, Inc.*, No. 11-cv-0310, 2012 WL 13075455, *8 (S.D. Tex. Apr. 23, 2012), the court analyzed the term "substantially similarly sized" and concluded it was not indefinite and did not require construction. The court noted that "when words of degree are at issue," the court should look to the specification to see if it provides "some standard." *Id.* at *6. The court concluded that term was as "accurate as the subject matter permit[ted]" and that any substitute for the claim term would be likely to cause confusion. Similarly, in *ACQIS LLC v. Appro Intern., Inc.*, No. 6:09-cv-148, 2010 WL 3057371, *9 (E.D. Tex. Aug. 2, 2010) the court construed "substantially similar in design" and "similar in design" and concluded the terms were not indefinite because the specification provided the scope. Indeed, a Division of this Court, in the context of other Fractus patents, concluded that "'[s]imilar' is not

a technical term," did not require construction, and rejected defendants' indefiniteness challenge. *Fractus, S.A. v. Samsung Elecs. Co.*, No. 6:09-cv-00203, 2010 WL 5287531, *13 (E.D. Tex. Dec. 17, 2010). The Court noted that a POSITA, reading the specifications, would understand what it meant for the subject matter (in that case, radiation patterns) to be similar. As described above, the specifications of these patents provide sufficient support for a POSITA to understand when shapes of radiating elements and holes are not similar.

While it hardly takes an expert to determine that these various sizes and shapes are not similar, Fractus's expert opines that a skilled artisan would be able to determine when this is the case. Ex. 1 ¶ 34. As Dr. Long explained in his deposition, an expert can visually identify the various shapes and sizes by looking at the shapes and using geometric principles. *See, e.g.*, Ex. 10 at 22:11–16, 24:8–11.[6] The Defendants, by contrast, offer zero expert testimony. Where defendants lack evidence of indefiniteness, particularly expert testimony, courts routinely conclude the term is sufficiently definite. *See, e.g.*, *McRO, Inc. v. Bethesda Softworks, LLC*, No. 12-cv-1509-LPS-CJB, 2017 WL 2483697, *16 (D. Del. June 8, 2017) (noting "it is worth reiterating that Defendants have the burden of demonstrating indefiniteness by clear and convincing evidence. And yet, as Plaintiffs['] counsel noted at the Markman hearing, Defendants submitted no expert declaration, citations to the inventor, or anything other than attorney argument in order to make that showing."); *Iconfind Inc. v. Yahoo! Inc.*, No. 09-cv-109 WBS-JFM, 2009 WL 8454648, *7 (E.D. Cal. Dec. 14, 2009) (noting in response to indefiniteness argument that patents "enjoy a presumption of validity because they have gone through the prosecution process with the Patent Office, and defendants

[6] If the Court thinks the terms should be construed more than just the plain and ordinary meaning, it should define the terms as Dr. Long suggests: "not similar in shape" means "geometric shapes that have different geometric figures" and "not similar in size" means "geometric shapes that have different sizes." Ex. 1 ¶ 34.

offer no expert testimony or evidence that a POSITA would not be able to determine the scope of the patents claims."). As this Court has noted, claim construction is "a preliminary stage," and where the Court "is presented with no expert or other testimony or any other evidence" the conclusion is "that Defendants have not met their burden of proving indefiniteness by clear and convincing evidence." *Allergan Sales, LLC v. Lupin Ltd.*, No. 2:11-cv-530-JRG, 2013 WL 4519609, *9 (E.D. Tex. Aug. 21, 2013); *see also Allergan Sales, LLC v. Sandoz Inc.*, No. 2:12-cv-207-JRG, 2016 WL 1224868, *18 (E.D. Tex. Mar. 29, 2016) ("Sandoz's argument consists of one page of attorney argument with no supporting expert testimony or other factual evidence and is insufficient to carry its burden of proving invalidity by clear and convincing evidence.").

B. "close proximity region" terms

Term to be Construed	Fractus's Construction	Defendants' Construction
"close proximity region" • '604 Patent, claims 1, 3, 13; • '138 Patent, claims 9, 15; • '770 Patent, claims 8, 13, 14	Not indefinite. No construction necessary. Alternatively: "a region between two radiating arms in which at least one portion on each arm is placed to allow electromagnetic fields in one arm being transferred to the other (excluding the feeding port) and the distance between the two arms is not constant throughout the entirety of the arms."	Indefinite
"coupled through a close proximity region" • '604 Patent claims 1, 13		

As to this term, Vivint appears to complain that an artisan would not know with reasonable certainty how "close" the proximity regions need to be to satisfy the claim limitations. Once again the patents, the unrebutted declaration of Dr. Long, and the caselaw proves Vivint incorrect.[7]

[7] While Fractus does not believe this term needs any construction, it has also provided an alternate definition that tracks the specification and the explanation offered by Dr. Long.

The ’604 Patent explains what a close proximity region is and its purpose: to enable coupling between two radiating arms and “to allow electromagnetic fields in one arm being transferred to the other through said specific close proximity regions.” Ex. 2 at 2:65–3:5. The patent further discusses that the close proximity region “reduce[s] the antenna size yet provid[es] a broadband or multiband behavior.” *Id.* at 1:39–42. And the patent places restrictions on this close proximity region, such that it cannot be located anywhere: It excludes the feeding port, *id.* at 3:8–9, and “at least one arm of the dipole needs to be folded such that said folded arm approaches the other arm to form the close proximity region,” *id.* at 2:24–26. Moreover, the distance between two arms cannot be constant throughout the antenna, thus “specifically exclud[ing] any antenna made of two radiating arms that run completely in parallel at a constant distance between them.” *Id.* at 3:38–40. Unlike other prior-art examples, “in the present invention at least two of the radiating arms of the antenna must be disconnected and coupled only through said close proximity region.” *Id.* at 2:35–38. The specification includes an example of when the “close” phrase of this term is satisfied: “for instance, at a distance smaller than a tenth of the longest free-space operating wavelength.” *Id.* at 3:2–3. Lastly, the patent provides at least two examples of close proximity regions (the areas with the “200” and “201” labels in the graphics from Figure 2), *id.* at Figure 2:

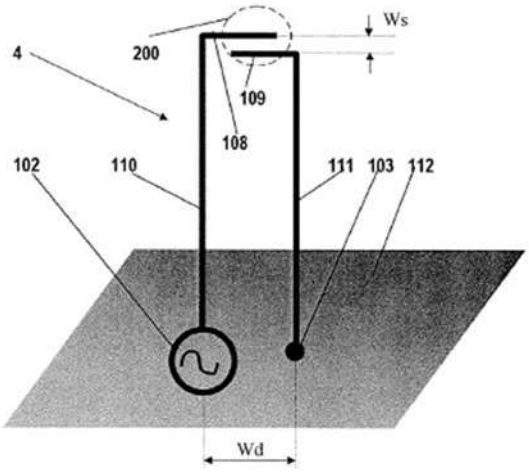

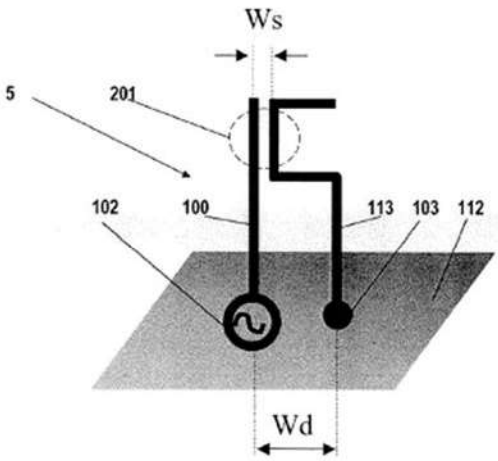

In sum, a POSITA will know what a close proximity region is from the patent because they will be able to determine where it permits the transfer of electromagnetic fields from one arm to the other that provides the multiband behavior. And it is this proximity that enables the coupling. Dr. Long agrees. Ex. 1 ¶ 38; Ex. 10 at 51:14–25. And once again, Vivint has no expert response at all. *See, e.g., McRO,* 2017 WL 2483697 at *16. Finally, while no court appears to have previously construed this exact term, this Court has concluded that the term "in close proximity" informed a skilled artisan about the scope of an invention with reasonable enough certainty that the claim was not indefinite and should be given its plain and ordinary meaning. *Innovative Display Technologies, LLC v. Hyundai Motor Co., et al.,* No. 2:14–cv–201–JRG, Docket No. 244 at 31, (E.D. Tex. May 4, 2015).

C. "hole(s) intersects the (external) perimeter"

Term to be Construed	Fractus's Construction	Defendants' Construction
"hole(s) intersects the (external) perimeter" • '092 Patent, claims 11, 32; • '246 Patent, claims 18, 28	Not indefinite. No construction necessary.	Indefinite

Defendants seem to assert that a skilled artisan would not know with reasonable certainty how to determine what the perimeter is and where the holes in the radiating element intersect that perimeter. This is incorrect. As an initial matter, as discussed above, "perimeter" should be given its plain and ordinary meaning; here, the boundary of the radiating element. And the patents provide numerous examples of holes. For these particular claims, however, the patents require a particular type of hole: one that is not completely enclosed by the radiating element (else there could not be an intersection with the external perimeter). Also, as discussed above, Case 13 of Figure 3 explicitly recites an example of this. A POSITA could apply the teachings of the patent,

this example, and their expertise to determine where a hole intersects the perimeter. Indeed, Dr. Long described exactly that in his deposition testimony (Ex. 10 at 42:19–43:1):

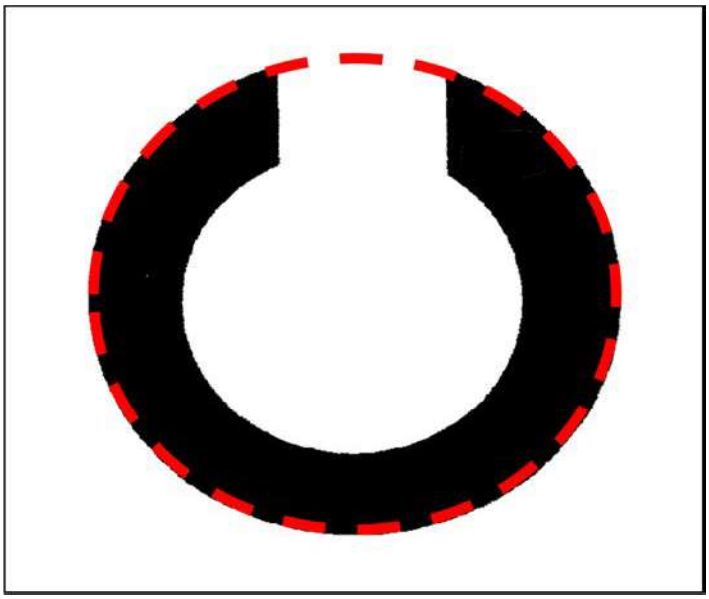

During Dr. Long's deposition, he was challenged with a variety of shapes to define what the hole was and where it intersected the perimeter. As he noted, however, these claims must be read in the context of the patent and so a skilled artisan would know to look for the hole, the external perimeter, and the intersection based on the electromagnetic characteristics of the antenna. Ex. 10 at 44:10-19. Vivint has no expert response, and so lacks the evidence to rebut him. *See, e.g., McRO,* 2017 WL 2483697 at *16.

D. "4G communication standard / communication standard(s)" and "receive signals from a 4G communication standard"

Term to be Construed	Fractus's Construction	Defendants' Construction
"4G communication standard / communication standard(s)" • '103 Patent, claims 12, 16, 19, 20; • '200 Patent, claims 1, 6, 11	Not indefinite. No construction necessary.	Indefinite
"receive signals from a 4G communication standard" • '200 Patent, claim 1		

Defendants both assert these terms are indefinite. They have offered no expert declaration to support their argument but instead cite to documents discussing the codification of 4G communication standards. From these documents, Defendants appear to claim that "4G communication standards" were not finalized as of the priority dates of the patents—July 18, 2006—and so therefore a POSITA would have been unable to determine what the patents referred to when using these terms.[8]

That is simply incorrect. The Federal Circuit has expressly held that "after-arising technology" may be "captured within the literal scope of valid claims that are drafted broadly-enough." *Innogenetics N.V. v. Abbott Labs.,* 512 F.3d 1363, 1371–72 (Fed. Cir. 2008). For example, in *Celltrace LLC v. AT & T Inc.,* No. 6:09-cv-294-LED-JDL, 2011 WL 738927, *15 (E.D. Tex. Feb. 23, 2011), the court rejected the contention that the term "GSM-compatible" should be given "the meaning that a person of ordinary skill in the art in question at the time of the invention . . . would interpret 'GSM-compatible' to mean." Instead, because the patent did not recite any sort of "conventional" or "traditional" limitation, the court permitted the term to include "after-arising GSM standards" and was "not limited to the GSM standards of 1993." *Id.* Here the patents contain no limiting or anchoring words such as "conventional" or "traditional" which would restrict the terms to only those components of the 4G standard which were widely known or recited in the patent's specification.

[8] To the extent Defendants contend that an antenna cannot "receive signals" from a "standard," Dr. Long's declaration directly addresses this claim and notes that a POSITA would understand this term "without further elaboration." Ex. 1 ¶ 37. Dr. Long's declaration notes that a POSITA would understand this to mean that the antenna could "interact[] with a signal [sent by Fourth generation cellular technology] to obtain or receive electromagnetic energy." *Id*. ¶ 36–37. It would thus be appropriate for the Court to adopt this definition should it determine that the construction advanced in the patents is insufficient on its own and a construction is necessary.

More to the point, the patents' specifications provide sufficient guidance to a POSITA regarding what the patents meant by "4G communication standard(s)," such that a POSITA could have analyzed antennas for infringement as of the effective filing date of the patents. The specifications give clear examples of the frequency bands and technologies the antenna would need to interface with such that it complies with "4G communication standard(s)":

> "[A multifunction wireless device] will preferably include . . . *4G services (including for instance HSDPA, WiFi, WiMax, WiBro and other advanced services) . . . a 3G or 4G service in the upper frequency region (1900-2170 MHz) . . . 3G, 3.5G, 4G or a combination of such services in [the 810-960 MHz, 1710-1990 MHz, and 1900-2170] frequency regions*." Ex. 3 at 9:33–62; Ex. 11 at 9:59–10:23 (emphasis added).
>
> "*3.5G or 4G features (i.e. comprising 3G and other advanced services such as for instance HSDPA, WiBro, WiFi, WiMAX, UWB or other highspeed wireless standards, hereinafter 4G services) . . . operation in additional frequency bands corresponding to said 4G standards (for instance, bands within the frequency region 2-11 GHz and some of its subregions such as for instance 2-11 GHz, 3-10 GHz, 2.4-2.5 GHz and 5-6 GHz or some other bands) . . .*" Ex. 3 at 24:22–30; Ex. 11 at 25:14–23 (emphasis added).

Whether or not 4G standards had been fully codified as of 2006 is thus irrelevant. A POSITA reading the patents in 2006 would have been able to reference the specifications in order to determine what antenna functions satisfied the "4G communication standard(s)" claim limitation, namely, compatibility with HSDPA, WiFi, WiMax, WiBro, UWB, or other highspeed wireless standards and operation in the following frequency bands: 1900-2170 MHz, 810-960 MHz, 1710-1990 MHz, or 2-11 GHz (including some of its subregions such as 3-10 GHz, 2.4-2.5 GHz and 5-6 GHz). And the patents note that these exemplary bands and technologies are not exclusive as there may be "additional frequency bands" which "correspond[] to [] 4G standards." Ex. 3 at 24:26–27; Ex. 11 at 25:17–19. Dr. Long's declaration similarly makes clear that a POSITA would have been perfectly capable of understanding these terms as referring to certain technical

specifications relating to the "Fourth Generation of broadband cellular technology." Ex. 1 ¶ 36. [9] Defendants have no expert response at all. *See, e.g., McRO,* 2017 WL 2483697 at *16.

Documents from the patents' file histories further demonstrate that market participants and those skilled in the art were fully informed regarding the technical requirements an antenna operating in 4G would need to possess. For example, the research firm Gartner, Inc. published "Mobile Communications Worldwide; Glossary, Methodology, and Definitions" in April 2006 and provided a definition and outline of 4G technologies. *See* Ex. 12 at 7 (*Mobile Communications Worldwide; Glossary, Methodology, and Definitions, 2006*, Gartner, Inc. (Apr. 2006), FRAC-ADT-00078416).[10] The definition notes that, although the final 4G standard was not yet released and "evolution to 4G could be from 3G, WiMax or Wi-Fi" (all technologies called out in the patents' specification), that "4G will likely require the following technologies: orthogonal frequency division multiplexing access (OFDMA); software-defined radio (SDR); Multiple Input/Multiple Output (MIMO); Interlayer Optimization; Handover and Mobility." *Id.* Similarly, an article published in the IEEE *Journal on Selected Areas in Communications* in March 2006 noted that "4G" systems "will include a variety of potential interworking access systems [e.g., second-generation (2G) mobile, IMT-2000, wireless local area network (WLAN), and wireline broadband access] based on an all-IP-based core network." Ex. 13 at 554 (*A Framework Design*

[9] As above, should the Court find the patent's language insufficient and the term in need of construction, it would be appropriate to adopt Dr. Long's construction that "communication standard . . . refers to technical specifications related to mobile or radio communication systems, including but not limited to GSM, UMTS, CDMA, W-CDMA, and LTE," while "4G communication refers to Fourth Generation of broadband cellular network technology." Ex. 1 ¶ 36.

[10] The corresponding Vivint bates number is FRAC-VIVINT-00055597.

for the Next-Generation Radio Access System, Moon et. al, (Mar. 2006), FRAC-VIVINT-00007152).[11]

And even if the standard(s) had not been finalized, there is no requirement that all aspects of a term have a clear referent to avoid indefiniteness. For example, in *United Access Techs., LLC v. AT&T Corp.*, 757 F. App'x 960, 970–71 (Fed. Cir. 2019), the Federal Circuit held that the term "high frequency" was not indefinite simply because the "upper limit" was not defined, as the "purpose of the limitation is to distinguish between frequencies in a lower range and those in a higher range." Because the patent's "intrinsic evidence define[d] the lower limit of the high frequency band and thus [made] the meaning of the term reasonably clear," the term was not indefinite. *Id.* Here too, the purpose of the "4G" limitations is to distinguish between generations of wireless technology and the potential bands/technologies with which the antenna should be capable of interfacing. Like the "lower limit" provided for "high frequency," *id.*, the patents here describe "4G communications standards" as distinct from "3G" standards and provide examples of the bands and technologies which a POSITA could consult to determine whether an antenna satisfies the claim terms as of the effective filing date. Because the patents provide sufficient guidance to a POSITA regarding the scope of these terms, these terms are not indefinite.

E. <u>"complexity factor"</u>

Term to be Construed	Fractus's Construction	Defendants' Construction
"complexity factor" • '103 Patent, claims 16, 20; • '200 Patent, claims 1, 6, 11	Not indefinite. No construction necessary. Alternatively: "a numerical value calculated using a formula that parametrizes the level of complexity of an antenna that captures and characterizes certain aspects	Indefinite

[11] The corresponding ADT bates number is FRAC-ADT-00077669.

	of the geometrical details of the antenna contour."	

ADT and Vivint both assert this term is indefinite. It appears they will argue that the patents fail to provide sufficient guidance for the measurement/calculation of the "complexity factors" present in the claims, and that the patents fail to provide guidance on how to treat three-dimensional or folded antennas in this analysis. This is incorrect. The patents provide explicit definitions setting forth the proper approach to translating three-dimensional or folded antennas into a form amenable to complexity factor analysis, and the patents supply clear guidance on the proper method for measuring and calculating the relevant "complexity factors." More importantly, Defendants have failed to cite any evidence that a POSITA could not apply the patents' teachings to determine complexity factors here.[12]

Under Federal Circuit caselaw, a claim term invoking a calculated parameter may be indefinite when "(1) different known methods exist for calculating a claimed parameter, (2) nothing in the record suggests using one method in particular, and (3) application of the different methods result in materially different outcomes for the claim's scope such that a product or method may infringe the claim under one method but not infringe when employing another method." *Ball Metal Beverage Container Corporation v. Crown Packaging Technology, Inc.*, 2020 WL 7828776, *3–4 (Fed. Cir. 2020). None of these conditions are met here.

The '103 and '200 patents are directed at "design[ing] [] [multi-function wireless] devices and, in particular, multiband antennas for such devices." Ex. 3 at 41:6–7; Ex. 11 at 42:43–44. Depending on the device in question, antenna designers face different constraints on antenna size and design, e.g. "laptop . . . device[s] might require a radiation pattern that . . . point[s] to the

[12] While Fractus does not believe this term needs any construction, it has also provided an alternate definition that tracks the specification.

ceiling and the walls rather than . . . the floor, since . . . a hotspot antenna or a base station are typically located above or on the side of the portable device." Ex. 3 at 2:29–35; Ex. 11 at 2:44–50. In fact, there are a number of interrelated parameters related to bandwidth, device size, directional or omni-directional antenna coverage, and other features of antenna performance, all of which, the patents note, pose challenges to antenna designers. And this is not a problem suitable to random or "obvious" modifications as "[p]hysical changes [to an antenna] intended to optimize one parameter of one antenna band change other antenna parameters, most likely in a counter-productive way." Ex. 3 at 4:16–20; Ex. 11 at 4:36–40. "All these different design problems . . . may only be solved in the design of the geometry of the antenna." Ex. 3 at 4:32–33; Ex. 11 at 4:53–54. The inventions of the patents—and in particular the "complexity factor"—create antennas which possess the proper size, orientation, and multi-band performance for integration into multifunction wireless devices and which can be designed, integrated, and analyzed in a way that balances these competing considerations.

In the '103 and '200 patents, "complexity factor" is the generic term for two calculated metrics used in the claims: "F21" and "F32." The claims of the '103 and '200 patents require that antennas satisfy certain values of complexity factors F21 and F32 in order to achieve the desired antenna performance. In describing these "complexity factor(s)," the patents state that "the level of complexity of an antenna contour can be advantageously parameterized by means of two complexity factors . . . F21 and F32 . . . which capture and characterize certain aspects of the geometrical details of the antenna contour . . . at different levels of scale." Ex. 3 at 16:29–35; Ex. 11 at 16:65–17:4.[13] Analyzing an antenna using these "complexity factors" allows for "effective

[13] Each of these calculated complexity factors encodes information regarding the antenna under analysis. F21 captures the "coarser" features of the antenna and the overall complexity of the antenna contours, including whether the antenna is sufficiently distinguished from a simple

antenna design" by providing "good hints on possible changes [to] antennas in order to obtain" improved performance while also "allow[ing] for easy identification of unsuitable antennas." Ex. 3 at 20:39–46; Ex. 11 at 21:22–31. In other words, the analyses described in the patents—and the intermediate choices made during those analyses—are always performed with an eye towards improving antenna performance.

The '103 and '200 patents explain precisely how to calculate the complexity factors F21 and F32, how to measure the inputs into these calculations, and how to orient the antennas such that the necessary measurements can be made. In directing a POSITA to analyze antennas using complexity factors, the patents begin by introducing the related concepts of antenna box, antenna rectangles, and antenna contours. Taken together, these concepts provide clear directions on how antennas—including three-dimensional or folded antennas—can be understood by a POSITA for purposes of the complexity factor analysis.

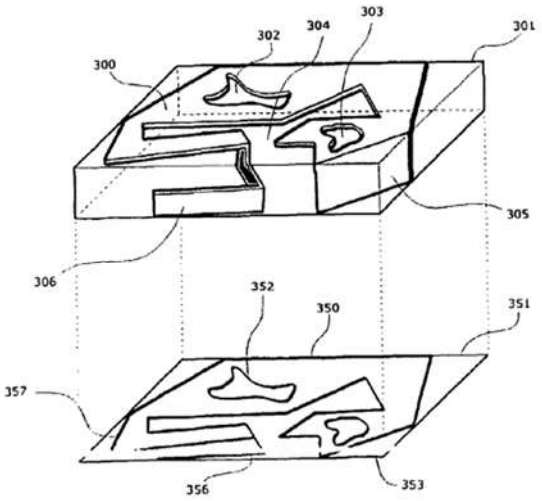

FIG. 3

The patents define the antenna box as "the minimum-sized parallelepiped of square or rectangular faces that completely encloses the antenna volume of space and wherein each one of the faces of the minimum-sized parallelepiped is tangent to at least one point of the volume," and "each possible pair of faces . . . shares an edge

rectangular shape. F21 also captures the number of paths provided to electric or magnetic currents that flow on the conductive parts of the antenna. By contrast, F32 captures information at a finer scale, suitable for evaluating the full complexity of an antenna contour and the degree of miniaturization achieved by the antenna.

forming an inner angle of 90 [degrees].” Ex. 3 at 11:5–12; Ex. 11 at 11:35–42. For example, in the following portions of Figure 3 the antenna box is labeled with 301:

The patents define the antenna rectangle as “the orthogonal projection of the antenna box along the normal to the face with largest area of the antenna box.” Ex. 3 at 13:55–58; Ex. 11 at 14:21–24. The antenna rectangle in Figure 3 is labeled with 351.

And the patents define the antenna contour as “a set of joint and/or disjoint segments comprising, [1] the perimeter of one or more antenna elements placed in the antenna rectangle, the perimeter of closed slots and/or closed apertures defined within the antenna elements, and/or [2a] the orthogonal projection onto the antenna rectangle of perimeters of antenna elements, or [2b] perimeters of or parts of antenna elements that are placed in the antenna box but not in the antenna rectangle.” Ex. 3 at 14:49–59; Ex. 11 at 15:16–26. In other words, the antenna contour is a set of segments comprising all the perimeters and parts of an antenna. In the case of antennas not arranged on a two-dimensional plane (also called “nonplanar antennas”), the antenna contour can be represented using either an orthogonal projection of the perimeters of nonplanar elements onto the two-dimensional antenna rectangle (as shown in Figure 3) or simply by including the perimeters of these nonplanar elements, *see* Ex. 3 at Figure 4 (401); Ex. 11 at Figure 4 (401).

For example, in Figure 3, the antenna contour is labeled with 350 and includes “(a) a first subset [] formed by the segments of the perimeter 357 (which includes both external segments of the antenna element 300 and those segments added to [the] antenna element by the opening 304) and the group of segments 356 corresponding to the orthogonal projection of part 306 of the antenna element 300; (b) a second subset [] formed by the segments 352 associated to the perimeter of aperture 302; and (c) a third subset [] formed by the segments 353 associated to the perimeter of aperture 303.” Ex. 3 at 27:9–18; Ex. 11 at 28:8–16.

The claim language itself also provides guidance to a POSITA regarding how to identify the antenna contour. For example, claim 1 of the '200 Patent requires that the "first antenna contour compris[e] an entire perimeter of the first antenna." Ex. 11 at Claim 1 As noted above, this can include "perimeters of . . . antenna elements that are placed in the antenna box but not in the antenna rectangle." Ex. 3 at 14:49–59; Ex. 11 at 15:16–26. By means of these techniques the specifications for an "antenna system can be translated into a certain level of geometrical complexity of the antenna contour associated to the structure of [the] antenna system" and which is, in turn, "parameterized by means of" the complexity factors F21 and F32. Ex. 3 at 35:1–9; Ex. 11 at 36:12–20; *see also* Ex. 3 at 37:1–4; Ex. 11 at 38:8–12.

The patents then use these concepts to detail the measurement and calculation of the "complexity factors" F21 and F32. First, three grids—G1, G2, G3—of rectangular cells are overlaid across the antenna rectangle and completely cover the antenna contour. Ex. 3 at 16:36–39; Ex. 11 at 17:5–7. Next, the number of cells of the grids—N1, N2, or N3, depending on the grid in question—which the antenna contour is at least partially or completely inside (depending on the complexity factor at issue) are counted. Ex. 3 at 18:36–44, 19:26–31; Ex. 11 at 19:13–20, 20:5–11. These counts are then used as inputs for one of two formulas:

For F21:	For F32:
$F_{21} = -\frac{\log(N_2) - \log(N_1)}{\log(1/2)}$	$F_{32} = -\frac{\log(N_3) - \log(N_2)}{\log(1/2)}$

Each aspect of the complexity factors, including (1) the basic construction of the grids, (2) how many columns and rows the grids should have, (3) the ratio between the sizes of their cells, (4) where the corners of the grids should be located relative to the feeding point, and (5) the precise

equations to be applied to calculate the factors in question, are laid out in detail in the specifications themselves.[14]

Because the patents clearly set forth how to analyze three-dimensional / folded antennas, what "complexity factor" means in general, the relevance of "complexity factors" to achieving the technical effect described in the patents, the proper method for measuring the inputs and calculating the "complexity factors" themselves, and how the specific "complexity factors" cited in the claims can be applied to analyze and improve antenna performance, the Court should reject Defendants' indefiniteness argument.

F. "grid-dimension curve"

Term to be Construed	Fractus's Construction	Defendants' Construction
"grid-dimension curve" • '365 Patent, claims 1, 2, 4, 5, 6, 7, 8, 9, 12, 13, 14, 15, 20, 22, 23, 31, 32, 33, 35, 36, 37, 41, 43, 44	Not indefinite. No construction necessary. "A curve which is not self-similar, which possesses a geometry having a grid dimension that is greater than one (1), and, if the curve has any periodicity, the period is defined by a non-periodic curve that includes at least ten connected segments in which no two adjacent and connected segments define a longer straight segment."	Indefinite

The claims of the '365 Patent use "grid-dimension curve" to describe particular geometric features useful in promoting small antenna size and multiband performance. Like "complexity factor," the "grid dimension" of an antenna provides useful information to antenna designers,

[14] These relevant parts of the specifications that correlate to each of these aspects are: (1) Ex. 3 at 16:56–62; Ex. 11 at 17:26–32; (2) Ex. 3 at 17:5–18; Ex. 11 at 17:42–56; (3) Ex. 3 at 16:47–55, 19:16–21; Ex. 11 at 17:16–25, 19:62–67; (4) Ex. 3 at 17:54–18:24; Ex. 11 at 18:24–65; (5) Ex. 3 at 20:29–38; Ex. 11 at 21:7–21; and (6) Ex. 3 at 18:50, 19:35; Ex. 11 at 19:25, 20:15.

including the "degree of miniaturization that may be achieved" for antennas operating in a specific wavelength. Ex. 6 at 7:18–21.

As with their arguments regarding "complexity factor," Defendants apparently will claim that "grid-dimension curve" is indefinite because they believe multiple grid sizes could be used when calculating a "grid dimension" value.[15] Yet the patent provides express guidance to a POSITA on the proper techniques, procedures, measurements, and calculations to be used when determining the "grid dimension" value for an antenna.

As noted above, a claimed parameter is only indefinite if there are multiple methods for calculating the parameter, the patent fails to provide guidance on the appropriate method, and the choice of method results in "materially different" infringement outcomes. *See Ball Metal Beverage Container Corp.*, 2020 WL 7828776 at *3–4. The '365 Patent's discussion of "grid dimension" exhibits none of these flaws. The '365 Patent sets forth *one* method for calculating "grid dimension," specifies the proper parameters to be used and measurements to be performed when gathering the inputs to that calculation and provides guidance on how to apply each step and the overall calculation in evaluating antennas for small size and superior performance.

The grid dimension calculation starts by overlaying two grids over the "geometry of the [antenna's] curve" such that they "completely cover[] the [antenna's] curve . . . within a minimum rectangular area [and] such that no entire row or column on the perimeter of one of the grids fails to enclose at least a portion of the [antenna's] curve." Ex. 6 at. 6:60–7:5. The specification provides clear guidance on the appropriate positioning of these grids, *id.*, the number of square cells the grids should contain—including maximum and minimum values—*id.* at 7:5–10, 7:50–59, the

[15] Because Defendants' apparent argument only focuses on the "grid-dimension" aspect of "grid-dimension curve," Fractus focuses on that aspect in its briefing, though the patent clearly sets forth all the elements of "grid-dimension curve." *See, e.g.,* Ex. 6 at 7:16–25.

method for counting how many cells (N1 and N2) enclose a portion of the antenna curve, *id.* at 6:63–7:1, and the relative length (L1 and L2) of the cells, *id.* at 7:5–6, 7:50–59. These measurements are then input into a single formula to calculate the "grid dimension" value of the antenna under analysis:

$$D_g = -\frac{\log(N2) - \log(N1)}{\log(L2) - \log(L1)}$$

Where an antenna curve possesses particularly intricate geometry, the patent enables a POSITA to increase the number of grid cells—up to a maximum of 1000—to capture finer features. *Id.* at 7:50–59. The patent offers the example of a grid dimension value for an antenna curve taken using two grids of 128 and 32 cells and which results in a grid dimension measure of 2. *Id.* at 7:26–7:50, Fig. 16–18. Because grid dimension is a practical measure for evaluating approaches to antenna miniaturization, it makes sense that the precision needed in the calculation will vary with the level of detail needed by the antenna designer. Not unlike a camera, the grid dimension measure can "zoom-in" with greater resolution by increasing the number of grid cells, or "zoom-out" by decreasing the number of cells. In either case, the goal is to effectively capture the relevant features of the antenna geometry under analysis. To demonstrate, the patent performs the grid dimension calculation on the same antenna curve but with two grids of 512 and 128 cells, resulting in a more precise grid dimension measure of ~1.9915. *Id.* at 7:60–8:10, Fig. 19. The difference between the two approaches—a grid dimension of 2 and a grid dimension of ~1.9915—is small, demonstrating that the grid dimension metric performs well even on highly complex antenna curve geometries like those depicted in Figures 16–19 using a relatively small number of cells. This "zooming in" is depicted in the progression from Figure 16 to 19 below:

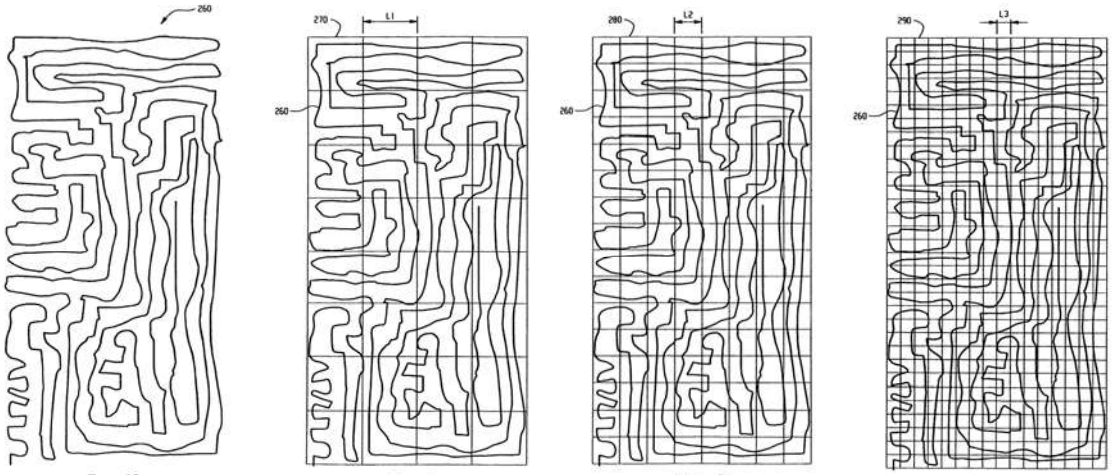

Fig. 16 Fig. 17 Fig. 18 Fig. 19

As the patent demonstrates, the capacity of the grid dimension measure to have greater or less resolution depending on the needs of the user renders the measure useful, not indefinite. The possibility of achieving different grid dimension results when using different sets of grids simply confirms that the choice of grid size is an important intermediate step in the grid dimension calculation, and it is a choice on which the patent guides the user. *See id.* at 7:50–59. As such, the Court should reject Defendants' indefiniteness arguments.

V. <u>CONCLUSION</u>

For the reasons set forth above, the Court should adopt Fractus's proposals regarding the disputed terms and reject Defendants' claims of indefiniteness.

Dated: November 16, 2023

Respectfully submitted,

By: */s/ Max L. Tribble*

Max L. Tribble
TX State Bar No. 20213950
mtribble@susmangodfrey.com
Joseph S. Grinstein
TX State Bar No. 24002188
jgrinstein@susmangodfrey.com
Justin A. Nelson
TX State Bar No. 24034766
jnelson@susmangodfrey.com
Adam Tisdall
TX State Bar No. 24106885
atisdall@susmangodfrey.com
SUSMAN GODFREY L.L.P.
1000 Louisiana, Suite 5100
Houston, TX 77002-5096
Telephone: (713) 651-9366
Facsimile: (713) 654-6666

Genevieve Vose Wallace
Washington State Bar No. 38422
SUSMAN GODFREY L.L.P.
401 Union Street, Suite 3000
Seattle, WA 98101
Phone: (206) 516-3880
Fax: (206) 516-3883

J. Craig Smyser
TX State Bar No. 24117083
csmyser@susmangodfrey.com
SUSMAN GODFREY L.L.P.
1301 Avenue of the Americas, 32nd Floor
New York, NY 10019
Telephone: (212) 336-8330
Facsimile: (212) 336-8340

S. Calvin Capshaw
TX Bar No. 03783900
ccapshaw@capshawlaw.com
Elizabeth L. DeRieux
TX Bar No. 05770585
ederieux@capshawlaw.com

CAPSHAW DERIEUX, L.L.P.
114 East Commerce Avenue
Gladewater, Texas 75647
Telephone: (903) 845-5770

T. John Ward, Jr.
TX Bar No. 00794818
jw@wsfirm.com
Claire Abernathy Henry
TX Bar No. 24053063
claire@wsfirm.com
Andrea L. Fair
TX Bar No. 24078488
andrea@wsfirm.com
WARD, SMITH & HILL, PLLC
P.O. Box 1231
Longview, Texas 75606-1231
Telephone: (903) 757-6400
Facsimile: (903) 757-2323

ATTORNEYS FOR FRACTUS, S.A.

CERTIFICATE OF SERVICE

This is to certify that on November 16, 2023, all counsel of record who are deemed to have consented to electronic service are being served with a copy of this document via the Court's CM/ECF system.

/s/ Craig Smyser
Craig Smyser