IEEE Std 802.11b-1999
(Supplement to
ANSI/IEEE Std 802.11, 1999 Edition)

Supplement to IEEE Standard for Information technology—Telecommunications and information exchange between systems—Local and metropolitan area networks—Specific requirements—

Part 11: Wireless LAN Medium Access Control (MAC) and Physical Layer (PHY) specifications:

Higher-Speed Physical Layer Extension in the 2.4 GHz Band

Sponsor

LAN/MAN Standards Committee
of the
IEEE Computer Society

Approved 16 September 1999

IEEE-SA Standards Board

Abstract: Changes and additions to IEEE Std 802.11, 1999 Edition are provided to support the higher rate physical layer (PHY) for operation in the 2.4 GHz band.
Keywords: 2.4 GHz, high speed, local area network (LAN), radio frequency (RF), wireless

---

The Institute of Electrical and Electronics Engineers, Inc.
3 Park Avenue, New York, NY 10016, USA

Copyright © 2000 by the Institute of Electrical and Electronics Engineers, Inc.
All rights reserved. Published 20 January 2000. Printed in the United States of America.

Print: ISBN 0-7381-1811-7 SH94788
PDF: ISBN 0-7381-1812-5 SS94788

No part of this publication may be reproduced in any form, in an electronic retrieval system or otherwise, without the prior written permission of the publisher.

Geotab Exhibit 1018
Geotab v. Fractus

IEEE Standards documents are developed within the IEEE Societies and the Standards Coordinating Committees of the IEEE Standards Association (IEEE-SA) Standards Board. Members of the committees serve voluntarily and without compensation. They are not necessarily members of the Institute. The standards developed within IEEE represent a consensus of the broad expertise on the subject within the Institute as well as those activities outside of IEEE that have expressed an interest in participating in the development of the standard.

Use of an IEEE Standard is wholly voluntary. The existence of an IEEE Standard does not imply that there are no other ways to produce, test, measure, purchase, market, or provide other goods and services related to the scope of the IEEE Standard. Furthermore, the viewpoint expressed at the time a standard is approved and issued is subject to change brought about through developments in the state of the art and comments received from users of the standard. Every IEEE Standard is subjected to review at least every five years for revision or reaffirmation. When a document is more than five years old and has not been reaffirmed, it is reasonable to conclude that its contents, although still of some value, do not wholly reflect the present state of the art. Users are cautioned to check to determine that they have the latest edition of any IEEE Standard.

Comments for revision of IEEE Standards are welcome from any interested party, regardless of membership affiliation with IEEE. Suggestions for changes in documents should be in the form of a proposed change of text, together with appropriate supporting comments.

Interpretations: Occasionally questions may arise regarding the meaning of portions of standards as they relate to specific applications. When the need for interpretations is brought to the attention of IEEE, the Institute will initiate action to prepare appropriate responses. Since IEEE Standards represent a consensus of all concerned interests, it is important to ensure that any interpretation has also received the concurrence of a balance of interests. For this reason, IEEE and the members of its societies and Standards Coordinating Committees are not able to provide an instant response to interpretation requests except in those cases where the matter has previously received formal consideration.

Comments on standards and requests for interpretations should be addressed to:

Secretary, IEEE-SA Standards Board
445 Hoes Lane
P.O. Box 1331
Piscataway, NJ 08855-1331
USA

Note: Attention is called to the possibility that implementation of this standard may require use of subject matter covered by patent rights. By publication of this standard, no position is taken with respect to the existence or validity of any patent rights in connection therewith. The IEEE shall not be responsible for identifying patents for which a license may be required by an IEEE standard or for conducting inquiries into the legal validity or scope of those patents that are brought to its attention.

Authorization to photocopy portions of any individual standard for internal or personal use is granted by the Institute of Electrical and Electronics Engineers, Inc., provided that the appropriate fee is paid to Copyright Clearance Center. To arrange for payment of licensing fee, please contact Copyright Clearance Center, Customer Service, 222 Rosewood Drive, Danvers, MA 01923 USA; (978) 750-8400. Permission to photocopy portions of any individual standard for educational classroom use can also be obtained through the Copyright Clearance Center.

Introduction

[This introduction is not part of IEEE Std 802.11b-1999, Supplement to IEEE Standard for Information technology—Telecommunications and information exchange between systems—Local and metropolitan area networks—Specific requirements—Part 11: Wireless LAN Medium Access Control (MAC) and Physical Layer (PHY) specifications: Higher-Speed Physical Layer Extension in the 2.4 GHz Band.]

This standard is part of a family of standards for local and metropolitan area networks. The relationship between the standard and other members of the family is shown below. (The numbers in the figure refer to IEEE standard numbers.)

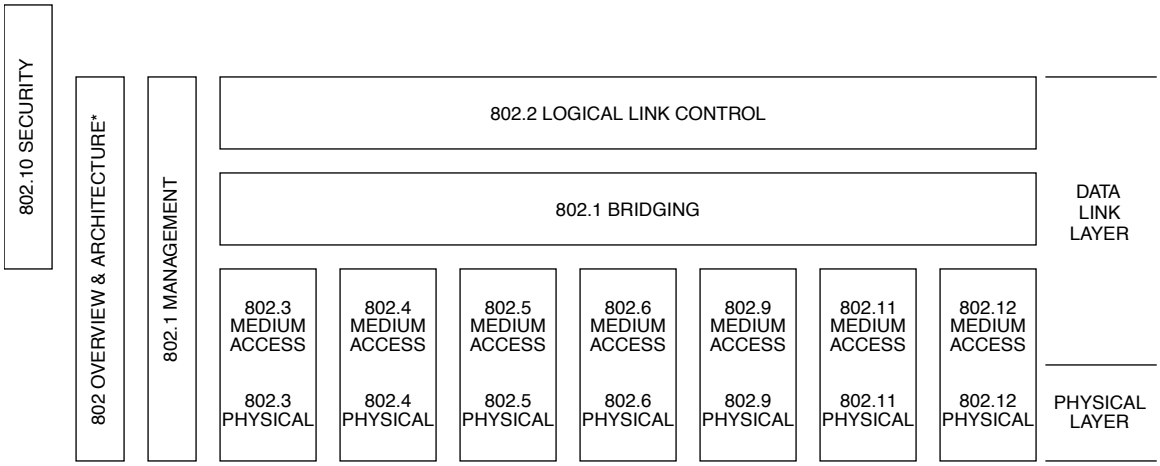

* Formerly IEEE Std 802.1A.

This family of standards deals with the Physical and Data Link layers as defined by the International Organization for Standardization (ISO) Open Systems Interconnection (OSI) Basic Reference Model (ISO/IEC 7498-1:1994). The access standards define seven types of medium access technologies and associated physical media, each appropriate for particular applications or system objectives. Other types are under investigation.

The standards defining the access technologies are as follows:

- IEEE Std 802 — *Overview and Architecture*. This standard provides an overview to the family of IEEE 802 Standards.
- ANSI/IEEE Std 802.1B and 802.1k [ISO/IEC 15802-2] — *LAN/MAN Management*. Defines an OSI management-compatible architecture, and services and protocol elements for use in a LAN/MAN environment for performing remote management.
- ANSI/IEEE Std 802.1D [ISO/IEC 15802-3] — *Media Access Control (MAC) Bridges*. Specifies an architecture and protocol for the interconnection of IEEE 802 LANs below the MAC service boundary.
- ANSI/IEEE Std 802.1E [ISO/IEC 15802-4] — *System Load Protocol*. Specifies a set of services and protocol for those aspects of management concerned with the loading of systems on IEEE 802 LANs.
- IEEE Std 802.1F — *Common Definitions and Procedures for IEEE 802 Management Information*
- ANSI/IEEE Std 802.1G [ISO/IEC 15802-5] — *Remote Media Access Control Bridging*. Specifies extensions for the interconnection, using non-LAN communication technologies, of geographically separated IEEE 802 LANs below the level of the logical link control protocol.

Copyright © 2000 IEEE. All rights reserved.

- ANSI/IEEE Std 802.2 [ISO/IEC 8802-2] — *Logical Link Control*
- ANSI/IEEE Std 802.3 [ISO/IEC 8802-3] — *CSMA/CD Access Method and Physical Layer Specifications*
- ANSI/IEEE Std 802.4 [ISO/IEC 8802-4] — *Token Passing Bus Access Method and Physical Layer Specifications*
- ANSI/IEEE Std 802.5 [ISO/IEC 8802-5] — *Token Ring Access Method and Physical Layer Specifications*
- ANSI/IEEE Std 802.6 [ISO/IEC 8802-6] — *Distributed Queue Dual Bus Access Method and Physical Layer Specifications*
- ANSI/IEEE Std 802.9 [ISO/IEC 8802-9] — *Integrated Services (IS) LAN Interface at the Medium Access Control and Physical Layers*
- ANSI/IEEE Std 802.10 — *Interoperable LAN/MAN Security*
- IEEE Std 802.11 [ISO/IEC DIS 8802-11] — *Wireless LAN Medium Access Control and Physical Layer Specifications*
- ANSI/IEEE Std 802.12 [ISO/IEC DIS 8802-12] — *Demand Priority Access Method, Physical Layer and Repeater Specifications*

In addition to the family of standards, the following is a recommended practice for a common Physical Layer technology:

- IEEE Std 802.7 — *IEEE Recommended Practice for Broadband Local Area Networks*

The following additional working groups have authorized standards projects under development:

- IEEE 802.14 — *Standard Protocol for Cable-TV Based Broadband Communication Network*
- IEEE 802.15 — *Wireless Personal Area Networks Access Method and Physical Layer Specifications*
- IEEE 802.16 — *Broadband Wireless Access Method and Physical Layer Specifications*

Copyright © 2000 IEEE. All rights reserved.

Participants

At the time this standard was balloted, the 802.11 Working Group had the following membership:

Vic Hayes, *Chair*
Stuart J. Kerry, *Vice Chair*
Al Petrick, *Co-Vice Chair*
George Fishel, *Secretary*

Robert O'Hara, *Chair and editor, 802.11-rev*
Allen Heberling, *State-diagram editor*
Michael A. Fischer, *State-diagram editor*
Dean M. Kawaguchi, *Chair PHY group*
David Bagby, *Chair MAC group*

Naftali Chayat, *Chair Task Group a*
Hitoshi Takanashi, *Technical Editor, 802.11a*

John Fakatselis, *Chair Task Group b*
Carl F. Andren, *Technical Editor, 802.11b*

Jeffrey Abramowitz
Reza Ahy
Keith B. Amundsen
James R. Baker
Kevin M. Barry
Phil Belanger
John Biddick
Simon Black
Timothy J. Blaney
Jan Boer
Ronald Brockmann
Wesley Brodsky
John H. Cafarella
Wen-Chiang Chen
Ken Clements
Wim Diepstraten
Peter Ecclesine
Richard Eckard
Darwin Engwer
Greg Ennis
Jeffrey J. Fischer
John Fisher
Ian Gifford
Motohiro Gochi
Tim Godfrey
Steven D. Gray
Jan Haagh
Karl Hannestad
Kei Hara
Chris D. Heegard
Robert Heile
Juha T. Heiskala
Maarten Hoeben
Masayuki Ikeda
Donald C. Johnson
Tal Kaitz
Ad Kamerman
Mika Kasslin
Patrick Kinney
Steven Knudsen
Bruce P. Kraemer
David S. Landeta
James S. Li
Stanley Ling
Michael D. McInnis
Gene Miller
Akira Miura
Henri Moelard
Masaharu Mori
Masahiro Morikura
Richard van Nee
Erwin R. Noble
Tomoki Ohsawa
Kazuhiro Okanoue
Richard H. Paine
Roger Pandanda
Victoria M. Poncini
Gregory S. Rawlins
Stanley A. Reible
Frits Riep
William Roberts
Kent G. Rollins
Clemens C.W. Ruppel
Anil K. Sanwalka
Roy Sebring
Tie-Jun Shan
Stephen J. Shellhammer
Matthew B. Shoemake
Thomas Siep
Donald I. Sloan
Gary Spiess
Satoru Toguchi
Cherry Tom
Mike Trompower
Tom Tsoulogiannis
Bruce Tuch
Sarosh N. Vesuna
Ikuo Wakayama
Robert M. Ward, Jr.
Mark Webster
Leo Wilz
Harry R. Worstell
Lawrence W. Yonge, III
Chris Zegelin
Jonathan M. Zweig
James Zyren

Copyright © 2000 IEEE. All rights reserved.

The following members of the balloting committee voted on this standard:

Carl F. Andren
Jack S. Andresen
Lek Ariyavisitakul
David Bagby
Kevin M. Barry
John H. Cafarella
James T. Carlo
David E. Carlson
Linda T. Cheng
Thomas J. Dineen
Christos Douligeris
Peter Ecclesine
Richard Eckard
Philip H. Enslow
John Fakatselis
Jeffrey J. Fischer
Michael A. Fischer
Robert J. Gagliano
Gautam Garai
Alireza Ghazizahedi
Tim Godfrey
Patrick S. Gonia
Steven D. Gray
Chris G. Guy
Vic Hayes
Allen Heberling
Chris D. Heegard
Juha T. Heiskala
Raj Jain
A. Kamerman
Dean M. Kawaguchi
Stuart J. Kerry
Patrick Kinney
Daniel R. Krent
Walter Levy
Stanley Ling
Randolph S. Little
Roger B. Marks
Peter Martini
Richard McBride
Bennett Meyer
David S. Millman
Hiroshi Miyano
Warren Monroe
Masahiro Morikura
Shimon Muller
Peter A. Murphy
Paul Nikolich
Erwin R. Noble
Satoshi Obara
Robert O'Hara
Charles Oestereicher
Kazuhiro Okanoue
Roger Pandanda
Ronald C. Petersen
Al Petrick
Vikram Punj
Pete Rautenberg
Stanley A. Reible
Edouard Y. Rocher
Kent G. Rollins
James W. Romlein
Floyd E. Ross
Christoph Ruland
Anil K. Sanwalka
Norman Schneidewind
James E. Schuessler
Rich Seifert
Matthew B. Shoemake
Leo Sintonen
Hitoshi Takanashi
Mike Trompower
Mark-Rene Uchida
Scott A. Valcourt
Richard Van Nee
Sarosh N. Vesuna
John Viaplana
Hirohisa Wakai
Robert M. Ward, Jr.
Mark Webster
Harry R. Worstell
Stefan M. Wurster
Oren Yuen
Jonathan M. Zweig
James Zyren

When the IEEE-SA Standards Board approved this standard on 16 September 1999, it had the following membership:

Richard J. Holleman, *Chair*
Donald N. Heirman, *Vice Chair*
Judith Gorman, *Secretary*

Satish K. Aggarwal
Dennis Bodson
Mark D. Bowman
James T. Carlo
Gary R. Engmann
Harold E. Epstein
Jay Forster*
Ruben D. Garzon
James H. Gurney
Lowell G. Johnson
Robert J. Kennelly
E. G. "Al" Kiener
Joseph L. Koepfinger*
L. Bruce McClung
Daleep C. Mohla
Robert F. Munzner
Louis-François Pau
Ronald C. Petersen
Gerald H. Peterson
John B. Posey
Gary S. Robinson
Akio Tojo
Hans E. Weinrich
Donald W. Zipse

*Member Emeritus

Also included is the following nonvoting IEEE-SA Standards Board liaison:

Robert E. Hebner

Janet Rutigliano
IEEE Standards Project Editor

Copyright © 2000 IEEE. All rights reserved.

Contents

3.8 Basic service set (BSS) basic rate set 1

4. Abbreviations and acronyms 2

7.2.3.1 Beacon frame format 2
7.2.3.9 Probe Response frame format 3
7.3.1.4 Capability Information field 3
7.3.1.9 Status Code field 5
7.3.2.2 Supported Rates element 5

9.2 DCF 5

9.6 Multirate support 6

10.3.2.2 MLME_scan.confirm 6
10.3.2.2.2 Semantics of the service primitive 7
10.3.3.1.2 Semantics of the service primitive 8
10.3.10 Start 8
10.3.10.1.2 Semantics of the service primitive 9
10.4.4 PLME_DSSSTESTMODE 10

18. High Rate, direct sequence spread spectrum PHY specification 11

18.1 Overview 11
18.2 High Rate PLCP sublayer 12
18.3 High Rate PLME 27
18.4 High Rate PMD sublayer 30

Annex A (normative), Protocol implementation conformance statement (PICS) proforma 59

Annex C (normative), Formal description of MAC operation 64

Annex D (normative), ASN.1 encoding of the MAC and PHY MIB 88

Annex F (informative), High Rate PHY/frequency-hopping interoperability 89

Copyright © 2000 IEEE. All rights reserved.

Supplement to IEEE Standard for Information technology—Telecommunications and information exchange between systems—Local and metropolitan area networks—Specific requirements—

Part 11: Wireless LAN Medium Access Control (MAC) and Physical Layer (PHY) specifications:

Higher-Speed Physical Layer Extension in the 2.4 GHz Band

[This supplement is based on IEEE Std 802.11, 1999 Edition.]

EDITORIAL NOTE—The editing instructions contained in this supplement define how to merge the material contained herein into the existing base standard to form the new comprehensive standard, as created by the addition of IEEE Std 802.11b-1999.

The editing instructions are shown in ***bold italic***. Three editing instructions are used: change, delete, and insert. ***Change*** is used to make small corrections in existing text or tables. This editing instruction specifies the location of the change and describes what is being changed either by using ~~strikethrough~~ (to remove old material) or <u>underscore</u> (to add new material). ***Delete*** removes existing material. ***Insert*** adds new material without disturbing the existing material. Insertions may require renumbering. If so, renumbering instructions are given in the editing instructions. Editorial notes will not be carried over into future editions.

3.8 Basic service set (BSS) basic rate set

Change the text in this subclause as shown:

The set of data transfer rates that all the stations in a BSS will be capable of using to receive <u>and transmit</u> frames <u>to</u>/from the wireless medium (WM). The BSS basic rate set data rates are preset for all stations in the BSS.

Copyright © 2000 IEEE. All rights reserved.

4. Abbreviations and acronyms

Insert the following abbreviations alphabetically in the list in Clause 4:

CCK	complementary code keying
HR/DSSS	High Rate direct sequence spread spectrum using the Long Preamble and header
HR/DSSS/short	High Rate direct sequence spread spectrum using the optional Short Preamble and header mode
HR/DSSS/PBCC	High Rate direct sequence spread spectrum using the optional packet binary convolutional coding mode and the Long Preamble and header
HR/DSSS/PBCC/short	High Rate direct sequence spread spectrum using the optional packet binary convolutional coding mode and the optional Short Preamble and header

7.2.3.1 Beacon frame format

Change Notes 1 and 2 of Table 5 as shown:

Table 5—Beacon frame body

Order	Information	Note
1	Timestamp	—
2	Beacon interval	—
3	Capability Information	—
4	SSID	—
5	Supported Rates	—
6	FH Parameter Set	1
7	DS Parameter Set	2
8	CF Parameter Set	3
9	IBSS Parameter Set	4
10	TIM	5

NOTES:

1—The FH Parameter Set information element is ~~only~~ present within Beacon frames generated by STAs using frequency-hopping PHYs.

2—The DS Parameter Set information element is ~~only~~ present within Beacon frames generated by STAs using direct sequence PHYs.

3—The CF Parameter Set information element is only present within Beacon frames generated by APs supporting a PCF.

4—The IBSS Parameter Set information element is only present within Beacon frames generated by STAs in an IBSS.

5—The TIM information element is only present within Beacon frames generated by APs.

 Copyright © 2000 IEEE. All rights reserved.

7.2.3.9 Probe Response frame format

Change Notes 1 and 2 of Table 12 as shown:

Table 12—Probe Response frame body

Order	Information	Note
1	Timestamp	—
2	Beacon interval	—
3	Capability Information	—
4	SSID	—
5	Supported Rates	—
6	FH Parameter Set	1
7	DS Parameter Set	2
8	CF Parameter Set	3
9	IBSS Parameter Set	4

NOTES:

1—The FH Parameter Set information element is ~~only~~ present within Probe Response frames generated by STAs using frequency-hopping PHYs.

2—The DS Parameter Set information element is ~~only~~ present within Probe Response frames generated by STAs using direct sequence PHYs.

3—The CF Parameter Set information element is only present within Probe Response frames generated by APs supporting a PCF.

4—The IBSS Parameter Set information element is only present within Probe Response frames generated by STAs in an IBSS.

7.3.1.4 Capability Information field

Change the text in 7.3.1.4 and Figure 27 as shown:

The Capability Information field contains a number of subfields that are used to indicate requested or advertised capabilities.

The length of the Capability Information field is 2 octets. The Capability Information field consists of the following subfields: ESS, IBSS, CF-Pollable, CF-Poll Request, ~~and~~ Privacy, Short Preamble, PBCC, and Channel Agility. The format of the Capability Information field is ~~as~~ illustrated in Figure 27.

Copyright © 2000 IEEE. All rights reserved.

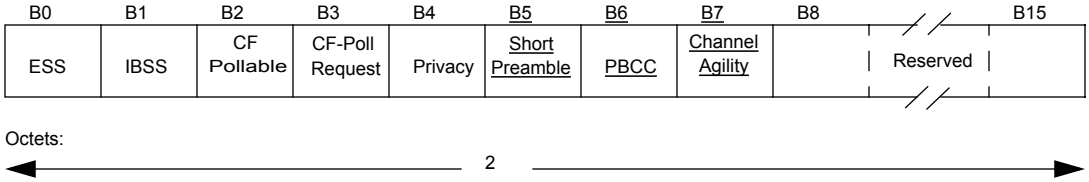

Figure 27—Capability Information fixed field

Insert the following text at the end of 7.3.1.4:

APs (as well as STAs in IBSSs) shall set the Short Preamble subfield to 1 in transmitted Beacon, Probe Response, Association Response, and Reassociation Response management MMPDUs to indicate that the use of the Short Preamble option, as described in 18.2.2.2, is allowed within this BSS. To indicate that the use of the Short Preamble option is not allowed, the Short Preamble subfield shall be set to 0 in Beacon, Probe Response, Association Response, and Reassociation Response management MMPDUs transmitted within the BSS.

STAs shall set the Short Preamble subfield to 1 in transmitted Association Request and Reassociation Request MMPDUs when the MIB attribute dot11ShortPreambleOptionImplemented is true. Otherwise, STAs shall set the Short Preamble subfield to 0 in transmitted Association Request and Reassociation Request MMPDUs.

APs (as well as STAs in IBSSs) shall set the PBCC subfield to 1 in transmitted Beacon, Probe Response, Association Response, and Reassociation Response management MMPDUs to indicate that the use of the PBCC Modulation option, as described in 18.4.6.6, is allowed within this BSS. To indicate that the use of the PBCC Modulation option is not allowed, the PBCC subfield shall be set to 0 in Beacon, Probe Response, Association Response, and Reassociation Response management MMPDUs transmitted within the BSS.

STAs shall set the PBCC subfield to 1 in transmitted Association Request and Reassociation Request MMPDUs when the MIB attribute dot11PBCCOptionImplemented is true. Otherwise, STAs shall set the PBCC subfield to 0 in transmitted Association Request and Reassociation Request MMPDUs.

Bit 7 of the Capabilities Information field shall be used to indicate the usage of Channel Agility by the HR/DSSS PHY. STAs shall set the Channel Agility bit to 1 when Channel Agility is in use, and shall set it to 0 otherwise.

Bits 8–15 of the Capability Information field are reserved.

 Copyright © 2000 IEEE. All rights reserved.

7.3.1.9 Status Code field

Add three Status Codes to Table 19 as shown:

Table 19—Status Codes

Status Code	Meaning
19	Association denied due to requesting station not supporting the Short Preamble option.
20	Association denied due to requesting station not supporting the PBCC Modulation option.
21	Association denied due to requesting station not supporting the Channel Agility option.

7.3.2.2 Supported Rates element

Change the text in 7.3.2.2 as shown.

The Supported Rates element specifies ~~all~~ the values ~~rates that this station is capable of receiving~~ in the Operational-Rate-Set parameter, as described in the MLME_Join.request and MLME_Start.request primitives. The information field is encoded as 1–8 octets, where each octet describes a single Supported Rate ~~in units of 500 kbit/s~~.

Within Beacon, Probe Response, Association Response, and Reassociation Response management frames, each Supported Rate belonging to the ~~BSSBasic Rate Set~~ BSS basic rate set is encoded as an octet with the msb (bit 7) set to 1 (e.g., a 1 Mbit/s rate belonging to the ~~BSSBasicRateSet~~ BSS basic rate set is encoded as X'82'). Rates not belonging to the ~~BSSBasicRateSet~~ BSS basic rate set are encoded with the msb set to 0 (e.g., a 2 Mbit/s rate not belonging to the ~~BSSBasicRateSet~~ BSS basic rate set is encoded as X'04'). The msb of each Supported Rate octet in other management frame types is ignored by receiving STAs.

~~BSSBasicRateSet~~ The BSS basic rate set information in Beacon and Probe Response management frames is delivered to the management entity in an STA via the BSSBasicRateSet parameter in the MLME_Scan.confirm primitive. It is used by the management entity in an STAs ~~in order~~ to avoid associating with a BSS if the STA cannot receive and transmit all the data rates in the ~~BSSBasicRateSet~~ BSS basic rate set (see Figure 36).

9.2 DCF

Change the eleventh paragraph in 9.2 as shown.

The medium access protocol allows for stations to support different sets of data rates. All STAs shall be able to receive and transmit at all the data rates in the aBasicRateSet specified parameter of the MLME_Join.request and MLME_Start.request primitives ~~and transmit at one or more of the aBasicRateSet~~

Copyright © 2000 IEEE. All rights reserved.

~~data rates.~~ To support the proper operation of the RTS/CTS and the Virtual Carrier Sense mechanism, all STAs shall be able to detect the RTS and CTS frames. For this reason, the RTS and CTS frames shall be transmitted at one of the rates in the BSS basic rate set ~~aBasicRateSet rates~~. (See 9.6 for a description of multirate operation.)

9.6 Multirate support

Change the existing text as shown:

Some PHYs have multiple data transfer rate capabilities that allow implementations to perform dynamic rate switching with the objective of improving performance. The algorithm for performing rate switching is beyond the scope of this standard, but in order to ensure coexistence and interoperability on multirate-capable PHYs, this standard defines a set of rules that shall be followed by all STAs.

All Control frames shall be transmitted at one of the rates in the ~~BSSBasicRateSet~~ BSS basic rate set ~~(see 10.3.10.1), or at one of the rates in the PHY mandatory rate set~~ so that they will be understood by all STAs in the BSS.

All frames with multicast and broadcast RA shall be transmitted at one of the rates included in the ~~BSSBasicRateSet~~ BSS basic rate set, regardless of their type or subtype.

Data and/or management MPDUs with a unicast ~~immediate address~~ RA shall be sent on any supported data rate selected by the rate switching mechanism (whose output is an internal MAC variable called MACCurrentRate, ~~defined in units of 500 kbit/s,~~ which is used for calculating the Duration/ID field of each frame). An STA shall not transmit at a rate that is known not to be supported by the destination STA, as reported in the Supported Rates element in the management frames. For frames of type Data + CF – ACK, Data + CF – Poll + CF – ACK, and CF – Poll + CF – ACK, the rate chosen to transmit the frame must be supported by both the addressed recipient STA and the STA to which the ACK is intended.

~~In order to~~ To allow the transmitting STA to calculate the contents of the Duration/ID field, the responding STA shall transmit its Control Response and Management Response frames (either CTS or ACK) at the highest rate in the BSS basic rate set that is less than or equal to the rate of ~~at the same rate as~~ the immediately previous frame in the frame exchange sequence (as defined in 9.7). ~~if this rate belongs to the PHY mandatory rates, or else at the highest possible rate belonging to the PHY rates in the BSSBasicRateSet.~~ In addition, the Control Response frame shall be sent using the same PHY options as the received frame.

For the HR/DSSS PHY, the time required to transmit a frame for use in the Duration/ID field is determined using the PLME-TXTIME.request primitive and the PLME-TXTIME.confirm primitive, both defined in 1.3.4.

10.3.2.2 MLME_scan.confirm

Change "set" to "sets" in the Name and Description columns for the PHY Parameter Set.

 Copyright © 2000 IEEE. All rights reserved.

10.3.2.2.2 Semantics of the service primitive

Change the table as shown:

Name	Type	Valid range	Description
BSSID	MACAddress	N/A	The BSSID of the found BSS.
SSID	Octet string	1–32 octets	The SSID of the found BSS.
BSSType	Enumeration	INFRASTRUCTURE, INDEPENDENT	The type of the found BSS.
Beacon Period	Integer	N/A	The Beacon period of the found BSS (in TU).
DTIM Period	Integer	As defined in frame format	The DTIM period of the BSS (in beacon periods).
Timestamp	Integer	N/A	The timestamp of the received frame (probe response/beacon) from the found BSS.
Local Time	Integer	N/A	The value of STA's TSF timer at the start of reception of the first octet of the timestamp field of the received frame (probe response or beacon) from the found BSS.
PHY Parameter Set	As defined in frame format	As defined in frame format	The parameter set relevant to the PHY.
CF Parameter Set	As defined in frame format	As defined in frame format	The parameter set for the CF periods, if found BSS supports CF mode.
IBSS Parameter Set	As defined in frame format	As defined in frame format	The parameter set for the IBSS, if found BSS is an IBSS.
Capability Information	As defined in frame format	As defined in frame format	The advertised capabilities of the BSS.
BSSBasicRateSet	Set of intergers	1–27 inclusive (for each integer in the set)	The set of data rates ~~(in units of 500 kb/s)~~ that must be supported by all STAs that desire to join this BSS. The STAs must be able to receive <u>and transmit</u> at each of the data rates listed in the set.

Copyright © 2000 IEEE. All rights reserved.

10.3.3.1.2 Semantics of the service primitive

Change the table as shown:

Name	Type	Valid range	Description
BSSDescription	BSSDescription	N/A	The BSSDescription of the BSS to join. The BSSDescription is a member of the set of descriptions that was returned as a result of a MLME-SCAN.request.
JoinFailureTimeout	Integer	≥ 1	The time limit, in units of beacon intervals, after which the join procedure will be terminated.
ProbeDelay	Integer	N/A	Delay (in μs) to be used prior to transmitting a Probe frame during active scanning.
OperationalRateSet	Set of integers	1–127 inclusive (for each integer in the set)	The set of data rates ~~(in units of 500 kbit/s)~~ that the STA desires to use for communication within the BSS. The STA must be able to receive at each of the data rates listed in the set. ~~The OperationalRateSet~~ This set is a superset of the ~~BSSBasicRateSet~~ BSS basic rate set advertised by the BSS.

10.3.10 Start

Change "set" to "sets" in the Name and Description columns for the PHY Parameter Set.

 Copyright © 2000 IEEE. All rights reserved.

10.3.10.1.2 Semantics of the service primitive

Change the table as shown:

Name	Type	Valid range	Description
SSID	Octet string	1–32 octets	The SSID of the BSS.
BSSType	Enumeration	INFRASTRUCTURE, INDEPENDENT	The type of the BSS.
Beacon period	Integer	≥ 1	The Beacon period of the BSS (in TU).
DTIM period	Integer	As defined in 7.3.12.6	The DTIM period of the BSS (in Beacon periods).
CF Parameter Set	As defined in Frame Format	As defined in 7.3.2.5	The Parameter Set for CF periods, if the BSS supports CF mode. aCFPPeriod is modified as a side effect of the issuance of a MLME-START.request primitive.
PHY Parameter Set	As defined in Frame Format	As defined in 7.3.2.3 or 7.3.2.4	The Parameter Set relevant to the PHY.
IBSS Parameter Set	As defined in Frame Format	As defined in 7.3.2.7	The Parameter Set for the IBSS, if BSS is an IBSS.
ProbeDelay	Integer	N/A	Delay (in μs) to be used prior to transmitting a Probe frame during active scanning.
CapabilityInformation	As defined in Frame Format	As defined in 7.3.1.4	The capabilities to be advertised for the BSS.
BSSBasicRateSet	Set of integers	1–127 inclusive (for each integer in the set)	The set of data rates ~~(in units of 500 kbit/s)~~ that must be supported by all STAs that desire to join this BSS. The STA that is creating the BSS must be able to receive and transmit at each of the data rates listed in the set.
OperationalRateSet	Set of integers	1–127 inclusive (for each integer in the set)	The set of data rates ~~(in units of 500 kbit/s)~~ that the STA desires to use for communication within the BSS. The STA must be able to receive at each of the data rates listed in the set. ~~The OperationalRateSet~~ This set is a superset of the BSS basic rate set ~~BSSBasicRateSet~~ advertised by the BSS.

Copyright © 2000 IEEE. All rights reserved.

10.4.4 PLME_DSSSTESTMODE

Add switches for the new options as shown:

PLME-DSSSTESTMODE.request (
TEST_ENABLE,
TEST_MODE,
SCRAMBLE_STATE,
SPREADING_STATE,
DATA_TYPE,
DATA_RATE;
PREAMBLE_TYPE;
MODULATION_CODE_TYPE;
)

Name	Type	Valid range	Description
TEST_ENABLE	Boolean	True, false	If true, enables the PHY test mode according to the remaining parameters.
TEST_MODE	Integer	1, 2, 3	TEST_MODE selects one of three operational modes: — 01 = transparent receive — 02 = continuous transmit — 03 = 50% duty cycle
SCRAMBLE_STATE	Boolean	True, false	If true, sets the operational state of the scrambler to ON.
SPREADING_STATE	Boolean	True, false	If true, selects the operational state of the chipping.
DATA_TYPE	Integer	1, 2, 3	Selects one of three data patterns to be used for the transmit portions of the tests; for example: all one, all zeros, and random data patterns.
DATA_RATE	Integer	2, 4, 11, 22	Selects: — 02 = 1 Mbit/s — 04 = 2 Mbit/s — 11 = 5.5 Mbit/s — 22 = 11 Mbit/s
PREAMBLE_TYPE	Boolean	null, 0, 1	Selects the preamble length. — 0 = long — 1 = short Can be null.
MODULATION_CODE_TYPE	Boolean	null, 0, 1	Selects the modulation code: — 0 = CCK — 1 = PBCC Can be null.

 Copyright © 2000 IEEE. All rights reserved.

Add Clause 18 as follows:

18. High Rate, direct sequence spread spectrum PHY specification

18.1 Overview

This clause specifies the High Rate extension of the PHY for the Direct Sequence Spread Spectrum (DSSS) system (Clause 15 of IEEE Std 802.11, 1999 Edition), hereinafter known as the High Rate PHY for the 2.4 GHz band designated for ISM applications.

This extension of the DSSS system builds on the data rate capabilities, as described in Clause 15 of IEEE Std 802.11, 1999 Edition, to provide 5.5 Mbit/s and 11 Mbit/s payload data rates in addition to the 1 Mbps and 2 Mbps rates. To provide the higher rates, 8-chip complementary code keying (CCK) is employed as the modulation scheme. The chipping rate is 11 MHz, which is the same as the DSSS system described in Clause 15 of IEEE Std 802.11, 1999 Edition, thus providing the same occupied channel bandwidth. The basic new capability described in this clause is called High Rate Direct Sequence Spread Spectrum (HR/DSSS). The basic High Rate PHY uses the same PLCP preamble and header as the DSSS PHY, so both PHYs can co-exist in the same BSS and can use the rate switching mechanism as provided.

In addition to providing higher speed extensions to the DSSS system, a number of optional features allow the performance of the radio frequency LAN system to be improved as technology allows the implementation of these options to become cost effective.

An optional mode replacing the CCK modulation with packet binary convolutional coding (HR/DSSS/PBCC) is provided.

Another optional mode is provided that allows data throughput at the higher rates (2, 5.5, and 11 Mbit/s) to be significantly increased by using a shorter PLCP preamble. This mode is called HR/DSSS/short, or HR/DSSS/PBCC/short. This Short Preamble mode can coexist with DSSS, HR/DSSS, or HR/DSSS/PBCC under limited circumstances, such as on different channels or with appropriate CCA mechanisms.

An optional capability for Channel Agility is also provided. This option allows an implementation to overcome some inherent difficulty with static channel assignments (a tone jammer), without burdening all implementations with the added cost of this capability. This option can also be used to implement IEEE 802.11-compliant systems that are interoperable with both FH and DS modulations. See Annex F for more details.

18.1.1 Scope

This clause specifies the PHY entity for the HR/DSSS extension and the changes that have to be made to the base standard to accommodate the High Rate PHY.

The High Rate PHY layer consists of the following two protocol functions:

a) A PHY convergence function, which adapts the capabilities of the physical medium dependent (PMD) system to the PHY service. This function is supported by the PHY convergence procedure (PLCP), which defines a method for mapping the MAC sublayer protocol data units (MPDU) into a framing format suitable for sending and receiving user data and management information between two or more STAs using the associated PMD system. The PHY exchanges PHY protocol data units (PPDU) that contain PLCP service data units (PSDU). The MAC uses the PHY service, so each MPDU corresponds to a PSDU that is carried in a PPDU.

Copyright © 2000 IEEE. All rights reserved.

b) A PMD system, whose function defines the characteristics of, and method of transmitting and receiving data through, a wireless medium between two or more STAs, each using the High Rate PHY system.

18.1.2 High Rate PHY functions

The 2.4 GHz High Rate PHY architecture is depicted in the ISO/IEC basic reference model shown in Figure 137. The High Rate PHY contains three functional entities: the PMD function, the PHY convergence function, and the layer management function. Each of these functions is described in detail in 18.1.2.1, 18.1.2.2, and 18.1.2.3. For the purposes of MAC and MAC management, when Channel Agility is both present and enabled (see 18.3.2 and Annex C), the High Rate PHY shall be interpreted to be both a High Rate and a frequency-hopping PHY.

The High Rate PHY service shall be provided to the MAC through the PHY service primitives described in Clause 12 of IEEE Std 802.11, 1999 Edition.

18.1.2.1 PLCP sublayer

To allow the MAC to operate with minimum dependence on the PMD sublayer, a PLCP sublayer is defined. This function simplifies the PHY service interface to the MAC services.

18.1.2.2 PMD sublayer

The PMD sublayer provides a means and method of transmitting and receiving data through a WM between two or more STAs, each using the High Rate system.

18.1.2.3 PHY management entity (PLME)

The PLME performs management of the local PHY functions in conjunction with the MAC management entity.

18.1.3 Service specification method and notation

The models represented by figures and state diagrams are intended to be illustrations of functions provided. It is important to distinguish between a model and a real implementation. The models are optimized for simplicity and clarity of presentation; the actual method of implementation is left to the discretion of the High Rate PHY compliant developer.

The service of a layer or sublayer is a set of capabilities that it offers to a user in the next-higher layer (or sublayer). Abstract services are specified here by describing the service primitives and parameters that characterize each service. This definition is independent of any particular implementation.

18.2 High Rate PLCP sublayer

18.2.1 Overview

This subclause provides a convergence procedure for the 2, 5.5, and 11 Mbit/s specification, in which PSDUs are converted to and from PPDUs. During transmission, the PSDU shall be appended to a PLCP preamble and header to create the PPDU. Two different preambles and headers are defined: the mandatory supported Long Preamble and header, which interoperates with the current 1 Mbit/s and 2 Mbit/s DSSS specification (as described in IEEE Std 802.11, 1999 Edition), and an optional Short Preamble and header. At the receiver, the PLCP preamble and header are processed to aid in demodulation and delivery of the PSDU.

 Copyright © 2000 IEEE. All rights reserved.

The optional Short Preamble and header is intended for applications where maximum throughput is desired and interoperability with legacy and non-short-preamble capable equipment is not a consideration. That is, it is expected to be used only in networks of like equipment, which can all handle the optional mode.

18.2.2 PPDU format

Two different preambles and headers are defined: the mandatory supported Long Preamble and header which is interoperable with the current 1 Mbit/s and 2 Mbit/s DSSS specification (as described in IEEE Std 802.11, 1999 Edition) and an optional Short Preamble and header.

18.2.2.1 Long PLCP PPDU format

Figure 127 shows the format for the interoperable (long) PPDU, including the High Rate PLCP preamble, the High Rate PLCP header, and the PSDU. The PLCP preamble contains the following fields: synchronization (Sync) and start frame delimiter (SFD). The PLCP header contains the following fields: signaling (SIGNAL), service (SERVICE), length (LENGTH), and CCITT CRC-16. Each of these fields is described in detail in 18.2.3. The format for the PPDU, including the long High Rate PLCP preamble, the long High Rate PLCP header, and the PSDU, do not differ from IEEE Std 802.11, 1999 Edition for 1Mbit/s and 2 Mbit/s. The only exceptions are

a) The encoding of the rate in the SIGNAL field;
b) The use of a bit in the SERVICE field to resolve an ambiguity in PSDU length in octets, when the length is expressed in whole microseconds;
c) The use of a bit in the SERVICE field to indicate if the optional PBCC mode is being used;
d) The use of a bit in the SERVICE field to indicate that the transit frequency and bit clocks are locked.

.

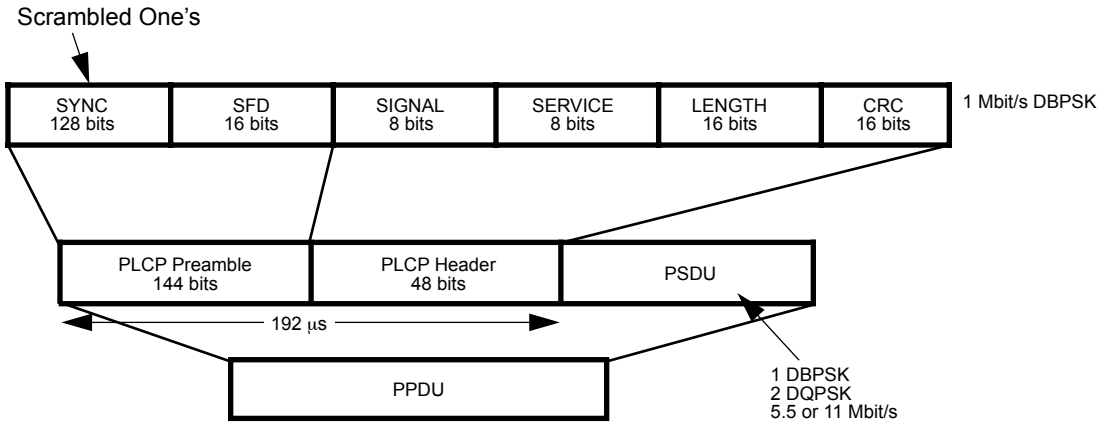

Figure 127—Long PLCP PPDU format

18.2.2.2 Short PLCP PPDU format (optional)

The short PLCP preamble and header (HR/DSSS/short) is defined as optional. The Short Preamble and header may be used to minimize overhead and, thus, maximize the network data throughput. The format of the PPDU, with HR/DSSS/short, is depicted in Figure 128.

Copyright © 2000 IEEE. All rights reserved.

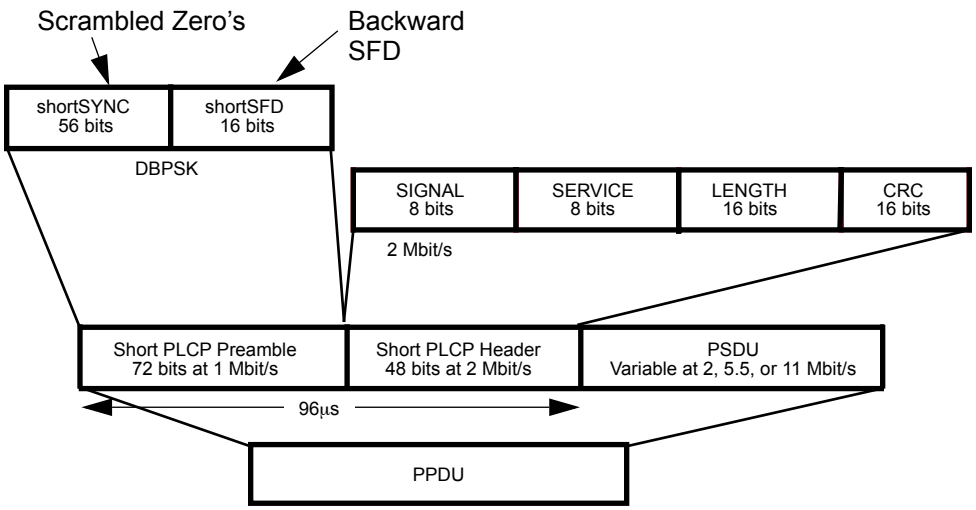

Figure 128—Short PLCP PPDU format

A transmitter using the short PLCP will only be interoperable with another receiver that is also capable of receiving this short PLCP. To interoperate with a receiver that is not capable of receiving a Short Preamble and header, the transmitter shall use the long PLCP preamble and header. The short PLCP preamble uses the 1 Mbit/s Barker code spreading with DBPSK modulation. The short PLCP header uses the 2 Mbit/s Barker code spreading with DQPSK modulation, and the PSDU is transmitted at 2Mbit/s, 5.5 Mbit/s, or 11 Mbit/s.

Stations not implementing this option that do active scanning will get a response even when the network is using Short Preambles, because all management traffic is returned with the same type preamble as received.

18.2.3 PLCP PPDU field definitions

In the PLCP field definition subclauses (18.2.3.1 through 18.2.3.14), the definitions of the long (Clause 15) PLCP fields are given first, followed by the definitions of the short PLCP. The names for the short PLCP fields are preceded by the term "short."

18.2.3.1 Long PLCP SYNC field

The SYNC field shall consist of 128 bits of scrambled "1" bits. This field is provided so the receiver can perform the necessary synchronization operations. The initial state of the scrambler (seed) shall be [1101100], where the leftmost bit specifies the value to put in the first delay element (Z^1) in Figure 131, and the rightmost bit specifies the value to put in the last delay element in the scrambler.

To support the reception of DSSS signals generated with implementations based on Clause 15, the receiver shall also be capable of synchronization on a SYNC field derived from any non-zero scrambler initial state.

18.2.3.2 Long PLCP SFD

The SFD shall be provided to indicate the start of PHY-dependent parameters within the PLCP preamble. The SFD shall be a 16-bit field, [1111 0011 1010 0000], where the rightmost bit shall be transmitted first in time.

 Copyright © 2000 IEEE. All rights reserved.

18.2.3.3 Long PLCP SIGNAL field

The 8-bit SIGNAL field indicates to the PHY the modulation that shall be used for transmission (and reception) of the PSDU. The data rate shall be equal to the SIGNAL field value multiplied by 100 kbit/s. The High Rate PHY supports four mandatory rates given by the following 8-bit words, which represent the rate in units of 100 kbit/s, where the lsb shall be transmitted first in time:

a) X'0A' (msb to lsb) for 1 Mbit/s;
b) X'14' (msb to lsb) for 2 Mbit/s;
c) X'37' (msb to lsb) for 5.5 Mbit/s;
d) X'6E' (msb to lsb) for 11 Mbit/s.

The High Rate PHY rate change capability is described in 18.2.3.14. This field shall be protected by the CCITT CRC-16 frame check sequence described in 18.2.3.6.

18.2.3.4 Long PLCP SERVICE field

Three bits have been defined in the SERVICE field to support the High Rate extension. The rightmost bit (bit 7) shall be used to supplement the LENGTH field described in 18.2.3.5. Bit 3 shall be used to indicate whether the modulation method is CCK <0> or PBCC <1>, as shown in Table 97. Bit 2 shall be used to indicate that the transmit frequency and symbol clocks are derived from the same oscillator. This locked clocks bit shall be set by the PHY layer based on its implementation configuration. The SERVICE field shall be transmitted b0 first in time, and shall be protected by the CCITT CRC-16 frame check sequence described in 18.2.3.6. An IEEE 802.11-compliant device shall set the values of the bits b0, b1, b4, b5, and b6 to 0.

Table 97—SERVICE field definitions

b0	b1	b2	b3	b4	b5	b6	b7
Reserved	Reserved	Locked clocks bit 0 = not 1 = locked	Mod. selection bit 0 = CCK 1 = PBCC	Reserved	Reserved	Reserved	Length extension bit

18.2.3.5 Long PLCP LENGTH field

The PLCP length field shall be an unsigned 16-bit integer that indicates the number of microseconds required to transmit the PSDU. The transmitted value shall be determined from the LENGTH and DataRate parameters in the TXVECTOR issued with the PHY-TXSTART.request primitive described in 18.4.4.2.

The length field provided in the TXVECTOR is in octets and is converted to microseconds for inclusion in the PLCP LENGTH field. The LENGTH field is calculated as follows. Since there is an ambiguity in the number of octets that is described by a length in integer microseconds for any data rate over 8 Mbit/s, a length extension bit shall be placed at bit position b7 in the SERVICE field to indicate when the smaller potential number of octets is correct.

a) 5.5 Mbit/s CCK Length = number of octets × 8/5.5, rounded up to the next integer.
b) 11 Mbit/s CCK Length = number of octets × 8/11, rounded up to the next integer; the service field (b7) bit shall indicate a "0" if the rounding took less than 8/11 or a "1" if the rounding took more than or equal to 8/11.

Copyright © 2000 IEEE. All rights reserved.

c) 5.5 Mbit/s PBCC Length = (number of octets + 1) × 8/5.5, rounded up to the next integer.

d) 11 Mbit/s PBCC Length = (number of octets + 1) × 8/11, rounded up to the next integer; the service field (b7) bit shall indicate a "0" if the rounding took less than 8/11 or a "1" if the rounding took more than or equal to 8/11.

At the receiver, the number of octets in the MPDU is calculated as follows:

a) 5.5 Mbit/s CCK Number of octets = Length × 5.5/8, rounded down to the next integer.

b) 11 Mbit/s CCK Number of octets = Length × 11/8, rounded down to the next integer, minus 1 if the service field (b7) bit is a "1."

c) 5.5 Mbit/s PBCC Number of octets = (Length × 5.5/8) –1, rounded down to the next integer.

d) 11 Mbit/s PBCC Number of octets = (Length × 11/8) –1, rounded down to the next integer, minus 1 if the service field (b7) bit is a "1."

An example for an 11 Mbit/s calculation described in psuedocode form is shown below. At the transmitter, the values of the LENGTH field and length extension bit are calculated as follows:

LENGTH'x = ((number of octets + P) × 8) / R

LENGTH = Ceiling (LENGTH')

If

(R = 11) and (LENGTH–LENGTH') ≥ 8/11)

then

Length Extension = 1

else

Length Extension = 0

where

R	is the data rate in Mbit/s;
P =	0 for CCK;
P =	1 for PBCC;
Ceiling (X)	returns the smallest integer value greater than or equal to X.

At the receiver, the number of octets in the MPDU is calculated as follows:

Number of octets = Floor(((Length × R) / 8) – P) – Length Extension

where

R	is the data rate in Mbit/s;
P =	0 for CCK;
P =	1 for PBCC;
Floor (X)	returns the largest integer value less than or equal to X.

 Copyright © 2000 IEEE. All rights reserved.

Table 98 shows an example calculation for several packet lengths of CCK at 11 Mbit/s.

Table 98—Example of LENGTH calculations for CCK

TX octets	Octets (× 8/11)	LENGTH	Length extension bit	LENGTH (× 11/8)	Floor (X)	RX octets
1023	744	744	0	1023	1023	1023
1024	744.7273	745	0	1024.375	1024	1024
1025	745.4545	746	0	1025.75	1025	1025
1026	746.1818	747	1	1027.125	1027	1026

Table 99 shows an example calculation for several packet lengths of PBCC at 11 Mbit/s.

Table 99—Example of LENGTH calculations for PBCC

TX octets	(Octets × 8/11) + 1	LENGTH	Length extension bit	(LENGTH × 11/8) – 1	Floor (X)	RX octets
1023	744.7273	745	0	1023.375	1023	1023
1024	745.4545	746	0	1024.750	1024	1024
1025	746.1818	747	1	1026.125	1026	1025
1026	746.9091	747	0	1026.125	1026	1026

This example illustrates why normal rounding or truncation of the number will not produce the right result. The length field is defined in units of microseconds and must correspond to the actual length, and the number of octets must be exact.

The least significant bit (lsb) shall be transmitted first in time. This field shall be protected by the CCITT CRC-16 frame check sequence described in 18.2.3.6.

18.2.3.6 PLCP CRC (CCITT CRC-16) field

The SIGNAL, SERVICE, and LENGTH fields shall be protected with a CCITT CRC-16 frame check sequence (FCS). The CCITT CRC-16 FCS shall be the one's complement of the remainder generated by the modulo 2 division of the protected PLCP fields by the polynomial

$$x^{16} + x^{12} + x^{5} + 1$$

The protected bits shall be processed in transmit order. All FCS calculations shall be made prior to data scrambling. A schematic of the processing is shown in Figure 129.

As an example, the SIGNAL, SERVICE, and LENGTH fields for a DBPSK signal with a PPDU length of 192 μs (24 octets) would be given by the following:

0101 0000 0000 0000 0000 0011 0000 0000 [leftmost bit (b0) transmitted first in time]
b0.....b48

Copyright © 2000 IEEE. All rights reserved.

The one's complement FCS for these protected PLCP preamble bits would be the following:

0101 1011 0101 0111 [leftmost bit (b0) transmitted first in time]
b0.....b16

Figure 129 depicts this example.

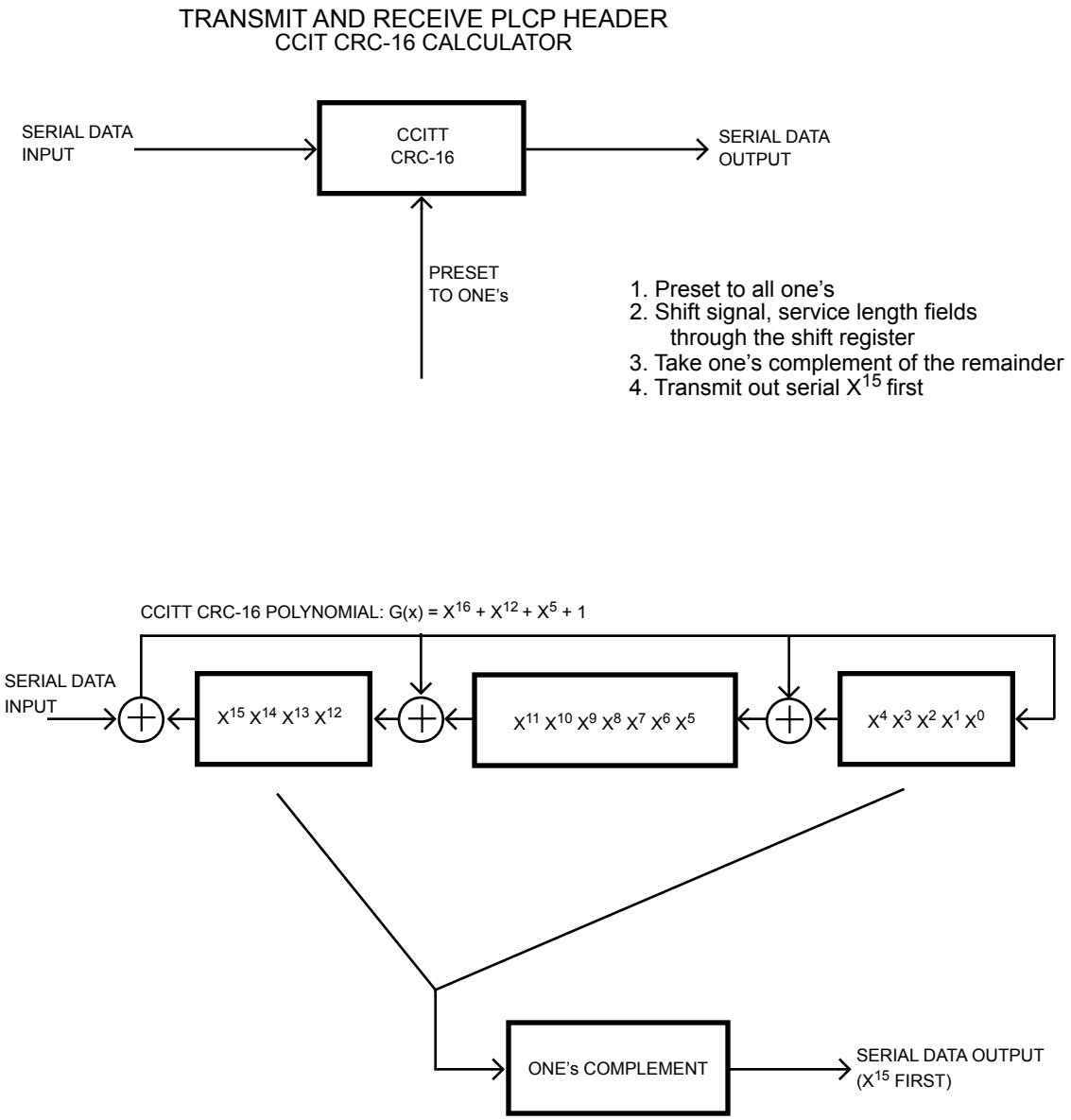

Figure 129—CCITT CRC-16 implementation

 Copyright © 2000 IEEE. All rights reserved.

An illustrative example of the CCITT CRC-16 FCS using the information from Figure 129 is shown in Figure 130.

Data	CRC Registers msb lsb	
	1111111111111111	; Initialize preset to one's
0	1110111111011111	
1	1101111110111110	
0	1010111101011101	
1	0101111010111010	
0	1011110101110100	
0	0110101011001001	
0	1101010110010010	
0	1011101100000101	
0	0110011000101011	
0	1100110001010110	
0	1000100010001101	
0	0000000100111011	
0	0000001001110110	
0	0000010011101100	
0	0000100111011000	
0	0001001110110000	
0	0010011101100000	
0	0100111011000000	
0	1001110110000000	
0	0010101100100001	
0	0101011001000010	
0	1010110010000100	
1	0101100100001000	
1	1010001000110001	
0	0101010001000011	
0	1010100010000110	
0	0100000100101101	
0	1000001001011010	
0	0001010010010101	
0	0010100100101010	
0	0101001001010100	
0	1010010010101000	

Figure 130—Example of CRC calculation

18.2.3.7 Long PLCP data modulation and modulation rate change

The long PLCP preamble and header shall be transmitted using the 1 Mbit/s DBPSK modulation. The SIGNAL and SERVICE fields combined shall indicate the modulation that shall be used to transmit the PSDU. The SIGNAL field indicates the rate, and the SERVICE field indicates the modulation. The transmitter and receiver shall initiate the modulation and rate indicated by the SIGNAL and SERVICE fields, starting with the first octet of the PSDU. The PSDU transmission rate shall be set by the DATARATE parameter in the TXVECTOR, issued with the PHY-TXSTART.request primitive described in 18.4.4.1.

18.2.3.8 Short PLCP synchronization (shortSYNC)

The shortSYNC field shall consist of 56 bits of scrambled "0" bits. This field is provided so the receiver can perform the necessary synchronization operations. The initial state of the scrambler (seed) shall be [001 1011], where the left end bit specifies the value to place in the first delay element (Z^1) in Figure 131, and the right end bit specifies the value to place in the last delay element (Z^7).

Copyright © 2000 IEEE. All rights reserved.

18.2.3.9 Short PLCP SFD field (shortSFD)

The shortSFD shall be a 16-bit field and be the time reverse of the field of the SFD in the long PLCP preamble (18.2.3.2). The field is the bit pattern 0000 0101 1100 1111. The right end bit shall be transmitted first in time. A receiver not configured to use the short header option will not detect this SFD.

18.2.3.10 Short PLCP SIGNAL field (shortSIGNAL)

The 8-bit SIGNAL field of the short header indicates to the PHY the data rate that shall be used for transmission (and reception) of the PSDU. A PHY operating with the HR/DSSS/short option supports three mandatory rates given by the following 8-bit words, where the lsb shall be transmitted first in time and the number represents the rate in units of 100 kBit/s:

a) X’14’ (msb to lsb) for 2 Mbits/s;
b) X’37’(msb to lsb) for 5.5 Mbits/s;
c) X’6E’ (msb to lsb) for 11 Mbits/s.

18.2.3.11 Short PLCP SERVICE field (shortSERVICE)

The SERVICE field in the short header shall be the same as the SERVICE field described in 18.2.3.4.

18.2.3.12 Short PLCP LENGTH field (shortLENGTH)

The LENGTH field in the short header shall be the same as the LENGTH field described in 18.2.3.5

18.2.3.13 Short CCITT CRC-16 field (shortCRC)

The CRC in the short header shall be the same as the CRC field defined in 18.2.3.6. The CRC-16 is calculated over the shortSIGNAL, shortSERVICE, and shortLENGTH fields.

18.2.3.14 Short PLCP data modulation and modulation rate change

The short PLCP preamble shall be transmitted using the 1 Mbit/s DBPSK modulation. The short PLCP header shall be transmitted using the 2 Mbit/s modulation. The SIGNAL and SERVICE fields combined shall indicate the modulation that shall be used to transmit the PSDU. The SIGNAL field indicates the rate, and the SERVICE field indicates the modulation. The transmitter and receiver shall initiate the modulation and rate indicated by the SIGNAL and SERVICE fields, starting with the first octet of the PSDU. The PSDU transmission rate shall be set by the DATARATE parameter in the TXVECTOR, issued with the PHY-TXSTART.request primitive described in 18.4.4.1.

18.2.4 PLCP/High Rate PHY data scrambler and descrambler

The polynomial $G(z) = z^{-7} + z^{-4} + 1$ shall be used to scramble all bits transmitted. The feedthrough configuration of the scrambler and descrambler is self-synchronizing, which requires no prior knowledge of the transmitter initialization of the scrambler for receive processing. Figure 131 and Figure 132 show typical implementations of the data scrambler and descrambler, but other implementations are possible.

The scrambler shall be initialized as specified in 18.2.3.8 for the short PLCP and 18.2.3.1 for the long PLCP. For a Long Preamble, this shall result in the scrambler registers Z^1 through Z^7 in Figure 131 having the data pattern [1101100] (i.e., Z^1= 1... Z^7= 0) when the scrambler is first started. The scrambler shall be initialized with the reverse pattern [0011011] when transmitting the optional Short Preamble.

 Copyright © 2000 IEEE. All rights reserved.

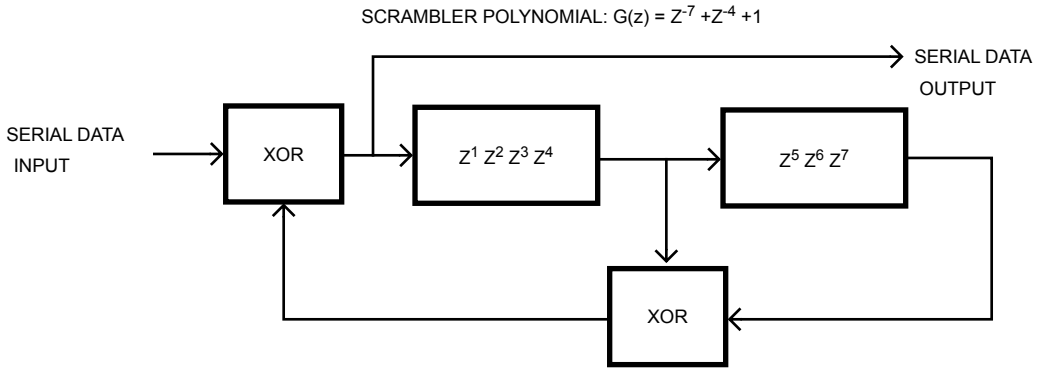

Figure 131—Data scrambler

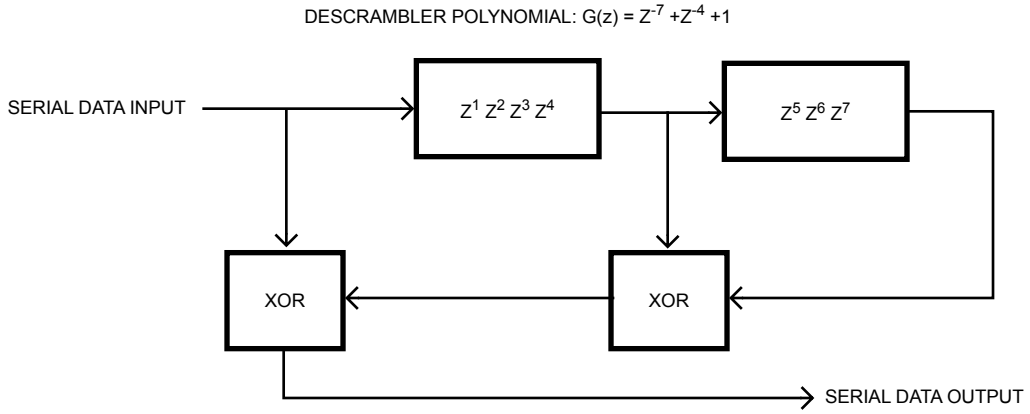

Figure 132—Data descrambler

18.2.5 PLCP transmit procedure

The transmit procedures for a High Rate PHY using the long PLCP preamble and header are the same as those described in IEEE Std 802.11, 1999 Edition (15.2.7 and 15.2.8), and do not change apart from the ability to transmit 5.5 Mbit/s and 11 Mbit/s.

The procedures for a transmitter employing HR/DSSS/short and HR/DSSS/PBCC/short are the same except for length and rate changes. The decision to use a long or short PLCP is beyond the scope of this standard.

The PLCP transmit procedure is shown in Figure 133.

A PHY-TXSTART.request (TXVECTOR) primitive will be issued by the MAC to start the transmission of a PPDU. In addition to DATARATE and LENGTH, other transmit parameters such as PREAMBLE_TYPE and MODULATION are set via the PHY-SAP with the PHY-TXSTART.request (TXVECTOR), as described in 18.3.5. The SIGNAL, SERVICE, and LENGTH fields of the PLCP header are calculated as described in 18.2.3.

Copyright © 2000 IEEE. All rights reserved.

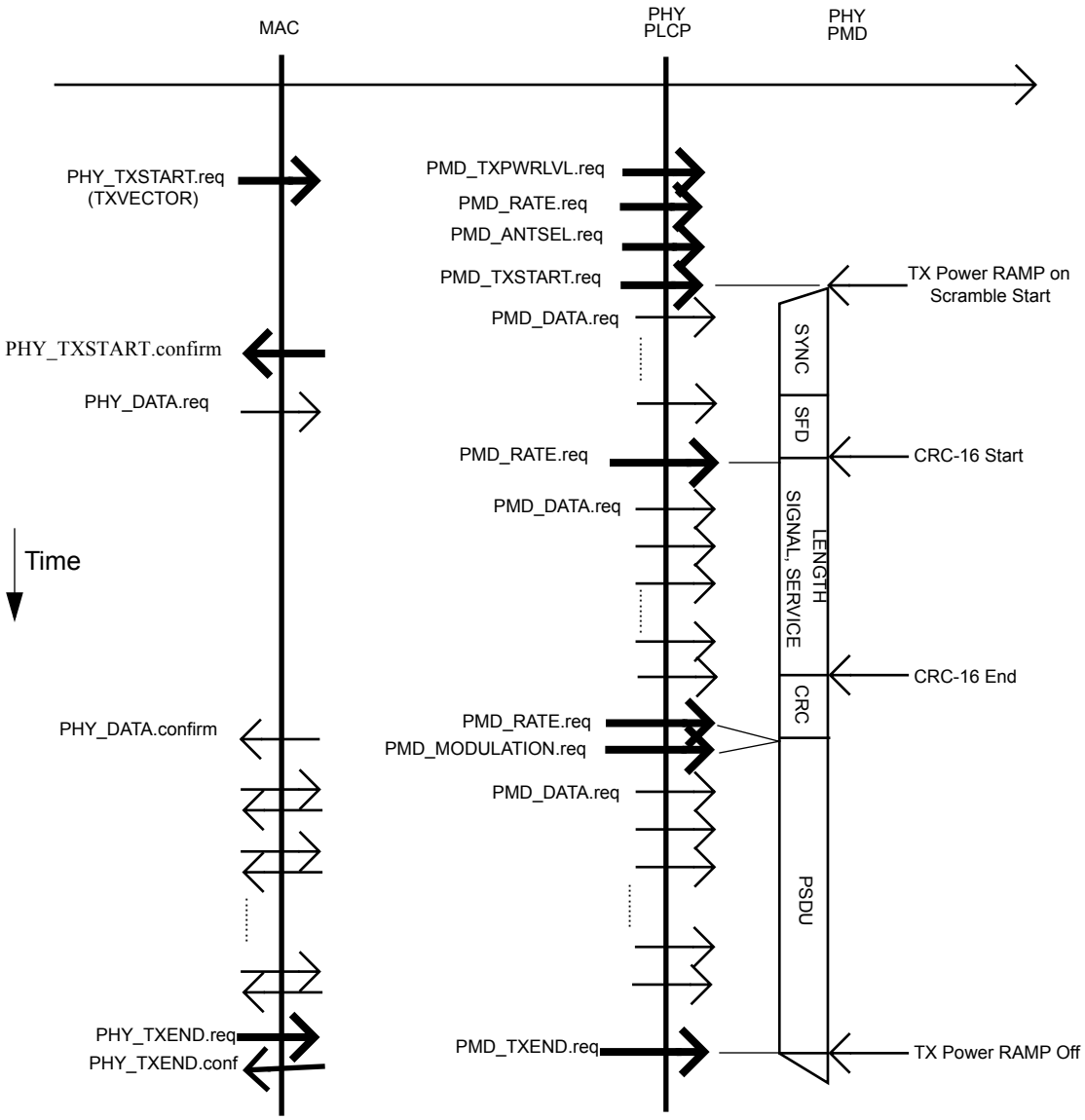

Figure 133—PLCP transmit procedure

The PLCP shall issue PMD_ANTSEL, PMD_RATE, and PMD_TXPWRLVL primitives to configure the PHY. The PLCP shall then issue a PMD_TXSTART.request, and the PHY entity shall immediately initiate data scrambling and transmission of the PLCP preamble based on the parameters passed in the PHY-TXSTART.request primitive. The time required for TX power on ramp, described in 18.4.7.6, shall be included in the PLCP synchronization field. Once the PLCP preamble transmission is complete, data shall be exchanged between the MAC and the PHY by a series of PHY-DATA.request (DATA) primitives issued by the MAC and PHY-DATA.confirm primitives issued by the PHY. The modulation and rate change, if any, shall be initiated with the first data symbol of the PSDU, as described in 18.2.3.7 and 18.2.3.14. The PHY proceeds with PSDU transmission through a series of data octet transfers from the MAC. At the PMD layer, the data octets are sent in lsb-to-msb order and presented to the PHY layer through PMD_DATA.request primitives. Transmission can be prematurely terminated by the MAC through the primitive PHY-TXEND.request. PHY-TXSTART shall be disabled by the issuance of the PHY-TXEND.request. Normal termination occurs after the transmission of the final bit of the last PSDU octet, calculated from the number

 Copyright © 2000 IEEE. All rights reserved.

supplied in the PHY preamble LENGTH and SERVICE fields using the equations specified in 18.2.3.5. The PPDU transmission shall be completed and the PHY entity shall enter the receive state (i.e., PHY-TXSTART shall be disabled). It is recommended that modulation continue during power-down to prevent radiating a continuous wave (CW) carrier. Each PHY-TXEND.request is acknowledged with a PHY-TXEND.confirm primitive from the PHY.

A typical state machine implementation of the PLCP transmit procedure is provided in Figure 134.

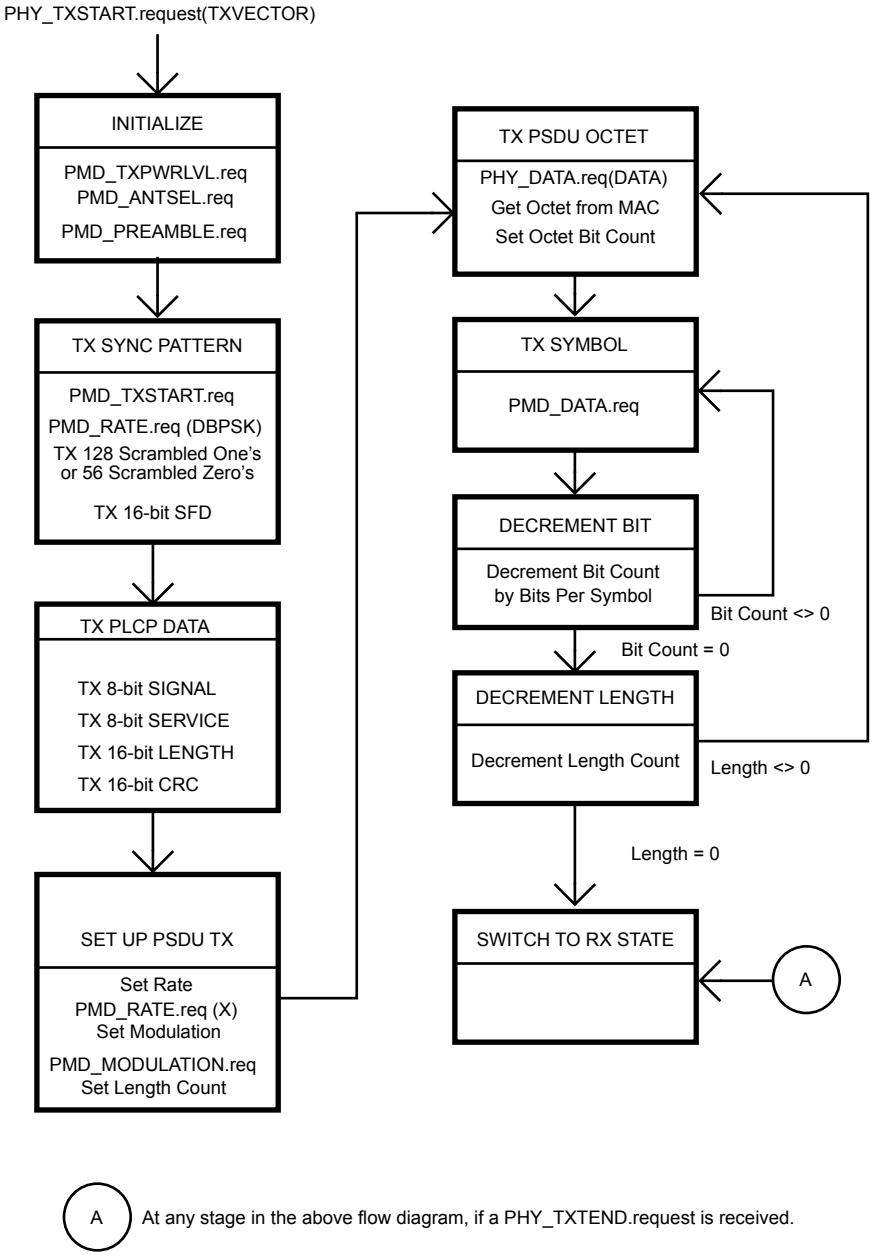

Figure 134—PLCP transmit state machine

Copyright © 2000 IEEE. All rights reserved.

18.2.6 PLCP receive procedure

The receive procedures for receivers configured to receive the mandatory and optional PLCPs, rates, and modulations are described in this subclause. A receiver that supports this High Rate extension of the standard is capable of receiving 5.5 Mbit/s and 11 Mbit/s, in addition to 1 Mbit/s and 2 Mbit/s. If the PHY implements the Short Preamble option, it shall detect both short and Long Preamble formats and indicate which type of preamble was received in the RXVECTOR. If the PHY implements the PBCC Modulation option, it shall detect either CCK or PBCC Modulations, as indicated in the SIGNAL field, and shall report the type of modulation used in the RXVECTOR.

The receiver shall implement the CCA procedure as defined in 18.4.8.4. Upon receiving a PPDU, the receiver shall distinguish between a long and short header format by the value of the SFD, as specified in 18.2.2. The receiver shall demodulate a long PLCP header using BPSK at 1 Mbit/s. The receiver shall demodulate a short PLCP header using QPSK at 2 Mbit/s. The receiver shall use the SIGNAL and SERVICE fields of the PLCP header to determine the data rate and modulation of the PSDU.

The PLCP receive procedure is shown in Figure 135. In order to receive data, the PHY-TXSTART.request shall be disabled so that the PHY entity is in the receive state. Further, through station management via the PLME, the PHY shall be set to the appropriate channel and the CCA method chosen. Other receive parameters, such as receive signal strength indication (RSSI), signal quality (SQ), and indicated DATARATE, may be accessed via the PHY-SAP.

Upon receiving the transmitted energy, according to the selected CCA mode, the PMD_ED shall be enabled (according to 18.4.8.4) as the RSSI strength reaches the ED_THRESHOLD, and/or PMD_CS shall be enabled after code lock is established. These conditions are used to indicate activity to the MAC via PHY-CCA.indicate, according to 18.4.8.4. PHY-CCA.indicate(BUSY) shall be issued for energy detection and/or code lock prior to correct reception of the PLCP header. The PMD primitives, PMD_SQ and PMD_RSSI, are issued to update the RSSI and SQ parameters reported to the MAC.

After PHY-CCA.indicate is issued, the PHY entity shall begin searching for the SFD field. Once the SFD field is detected, CCITT CRC-16 processing shall be initiated and the PLCP SIGNAL, SERVICE, and LENGTH fields shall be received. The CCITT CRC-16 FCS shall be processed. If the CCITT CRC-16 FCS check fails, the PHY receiver shall return to the RX IDLE state, as depicted in Figure 136. Should the status of CCA return to the IDLE state during reception prior to completion of the full PLCP processing, the PHY receiver shall return to the RX IDLE state.

If the PLCP header reception is successful (and the SIGNAL field is completely recognizable and supported), a PHY-RXSTART.indicate(RXVECTOR) shall be issued. The RXVECTOR associated with this primitive includes

a) The SIGNAL field;
b) The SERVICE field;
c) The PSDU length in octets (calculated from the LENGTH field in microseconds and the DATARATE in Mbit/s, in accordance with the formula in 18.2.3.5);
d) RXPREAMBLE_TYPE (which is an enumerated type taking on values SHORTPREAMBLE or LONGPREAMBLE);
e) The antenna used for receive (RX_ANTENNA), RSSI, and SQ.

 Copyright © 2000 IEEE. All rights reserved.

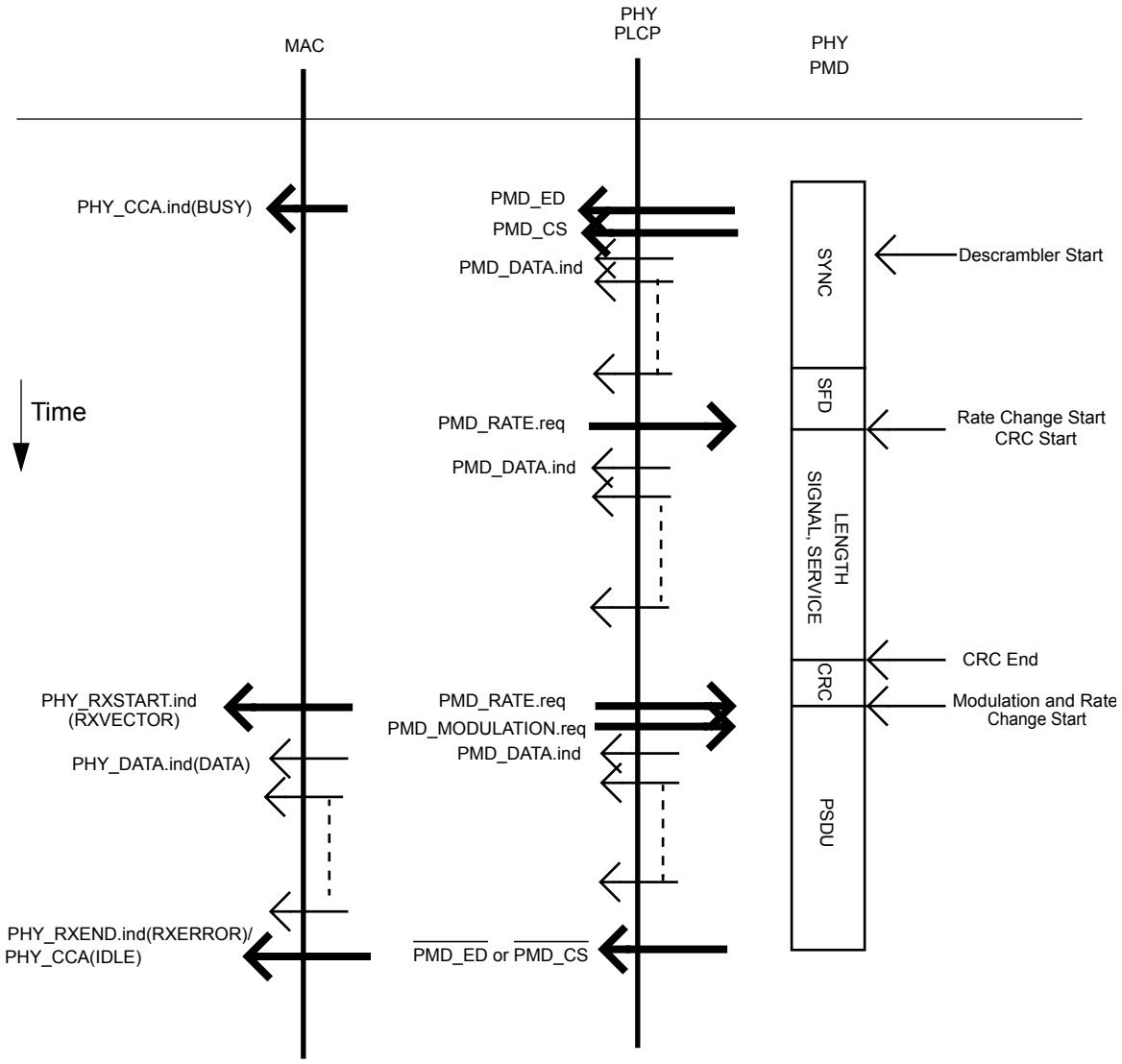

Figure 135—PLCP receive procedure

The received PSDU bits are assembled into octets and presented to the MAC using a series of PHY-DATA.indicate (DATA) primitive exchanges. The rate and modulation change indicated in the SIGNAL field shall be initiated with the first symbol of the PSDU, as described in 18.2.5. The PHY proceeds with PSDU reception. After reception of the final bit of the last PSDU octet, indicated by the PLCP preamble LENGTH field, the receiver shall be returned to the RX IDLE state shown in Figure 136.

A PHY-RXEND.indicate (NoError) primitive shall be issued. A PHY-CCA.indicate (IDLE) primitive shall be issued following a change in PHYCS (PHY carrier sense) and/or PHYED (PHY energy detection) according to the selected CCA method.

In the event that a change in PHYCS or PHYED would cause the status of CCA to return to the IDLE state before the complete reception of the PSDU, as indicated by the PLCP LENGTH field, the error condition PHY-RXEND.indicate (CarrierLost) shall be reported to the MAC. The High Rate PHY shall ensure that the CCA indicates a busy medium for the intended duration of the transmitted PPDU.

Copyright © 2000 IEEE. All rights reserved.

If the PLCP header is successful, but the indicated rate or modulation in the SIGNAL and SERVICE fields is not within the capabilities of the receiver, a PHY-RXSTART.indicate shall not be issued. The PHY shall issue the error condition PHY-RXEND.indicate (UnsupportedRate). If the PLCP header is invalid, a PHY-RXSTART.indicate shall not be issued, and the PHY shall issue the error condition PHY-RXEND.indicate (FormatViolation). Also, in both cases, the High Rate PHY shall ensure that the CCA indicates a busy medium for the intended duration of the transmitted PSDU, as indicated by the LENGTH field. The intended duration is indicated by the LENGTH field (LENGTH × 1 μs).

A typical state machine implementation of the PLCP receive procedure is shown in Figure 136.

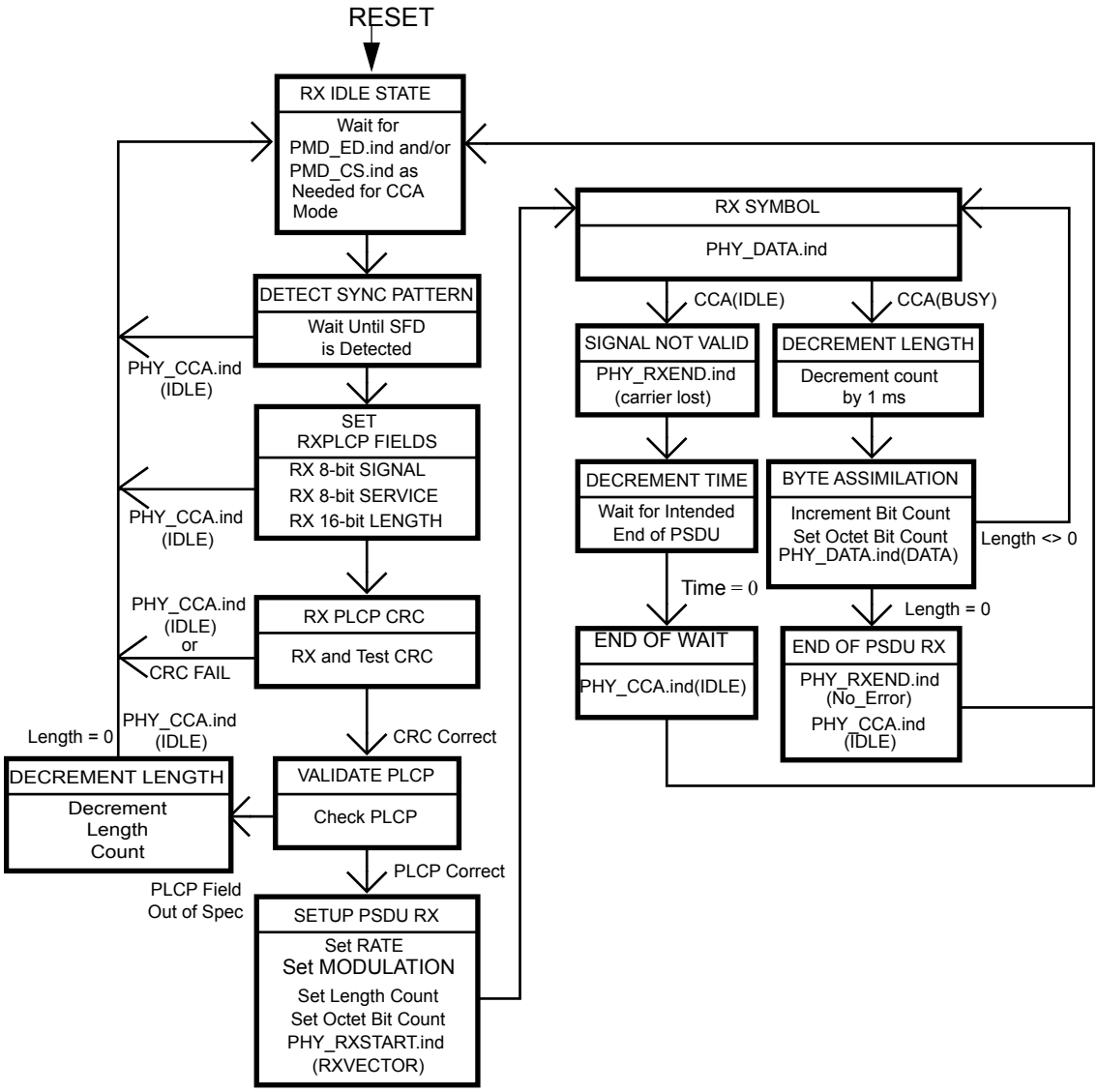

Figure 136—PLCP receive state machine

 Copyright © 2000 IEEE. All rights reserved.

18.3 High Rate PLME

18.3.1 PLME_SAP sublayer management primitives

Table 100 lists the MIB attributes that may be accessed by the PHY sublayer entities and intralayer or higher layer management entities (LMEs). These attributes are accessed via the PLME-GET, PLME-SET, and PLME-RESET primitives defined in Clause 10 of IEEE Std 802.11, 1999 Edition.

18.3.2 High Rate PHY MIB

All High Rate PHY MIB attributes are defined in Annex D of IEEE Std 802.11, 1999 Edition, with specific values defined in Table 100.

Table 100—MIB attribute default values/ranges

Managed object	Default value/range	Operational semantics
dot11PhyOperationTable		
dot11PHYType	High Rate–2.4 (X‘05’)	Static
dot11TempType	Implementation dependent	Static
dot11CurrentRegDomain	Implementation dependent	Static
dot11ShortPreambleOptionImplemented	Implementation dependent	Static
dot11PBCCOptionImplemented	Implementation dependent	Static
dot11ChannelAgility Present	Implementation dependent	Static
dot11ChannelAgilityEnabled	False/Boolean	Dynamic
dot11PhyAntennaTable		
dot11CurrentTxAntenna	Implementation dependent	Dynamic
dot11DiversitySupport	Implementation dependent	Static
dot11CurrentRxAntenna	Implementation dependent	Dynamic
dot11PhyTxPowerTable		
dot11NumberSupportedPowerLevels	Implementation dependent	Static
dot11TxPowerLevel1	Implementation dependent	Static
dot11TxPowerLevel2	Implementation dependent	Static
dot11TxPowerLevel3	Implementation dependent	Static
dot11TxPowerLevel4	Implementation dependent	Static
dot11TxPowerLevel5	Implementation dependent	Static
dot11TxPowerLevel6	Implementation dependent	Static
dot11TxPowerLevel7	Implementation dependent	Static
dot11TxPowerLevel8	Implementation dependent	Static
dot11CurrentTxPowerLevel	Implementation dependent	Dynamic
dot11PhyDSSSTable		
dot11CurrentChannel	Implementation dependent	Dynamic
dot11CCAModeSupported	Implementation dependent	Static
dot11CurrentCCAMode	Implementation dependent	Dynamic
dot11EDThreshold	Implementation dependent	Dynamic

Copyright © 2000 IEEE. All rights reserved.

Table 100—MIB attribute default values/ranges (continued)

Managed object	Default value/range	Operational semantics
dot11AntennasListTable		
dot11SupportTxAntenna	Implementation dependent	Static
dot11SupportRxAntenna	Implementation dependent	Static
dot11DiversitySelectionRx	Implementation dependent	Dynamic
dot11RegDomainsSupportedTable		
dot11RegDomainsSupported	Implementation dependent	Static
dot11SupportedDataRatesTx	Table Tx X'02', X'04', X'0B', X'16'	Static
dot11SupportedDataRatesRx	Table Rx X'02', X'04', 'X'0B', X'16'	Static
NOTE—The column titled "Operational semantics" contains two types: static and dynamic. Static MIB attributes are fixed and cannot be modified for a given PHY implementation. Dynamic MIB attributes can be modified by some management entities.		

18.3.3 DS PHY characteristics

The static DS PHY characteristics, provided through the PLME-CHARACTERISTICS service primitive, are shown in Table 101. The definitions of these characteristics are in 10.4.3 of IEEE Std 802.11, 1999 Edition.

18.3.4 High Rate TXTIME calculation

The value of the TXTIME parameter returned by the PLME-TXTIME.confirm primitive shall be calculated according to the following equation:

$$\text{TXTIME} = \text{PreambleLength} + \text{PLCPHeaderTime} + \text{Ceiling}(((\text{LENGTH}+\text{PBCC}) \times 8) / \text{DATARATE})$$

where

LENGTH and DATARATE are values from the TXVECTOR parameter of the corresponding PLME-TXTIME.request primitive;

LENGTH is in units of octets;

DATARATE is in units of Mbit/s;

Ceiling is a function that returns the smallest integer value greater than or equal to its argument value;

PBCC has a value of 1 if the SIGNAL value from the TXVECTOR parameter specifies PBCC and has a value of 0 otherwise;

The value of PreambleLength is 144 μs if the TXPREAMBLE_TYPE value from the TXVECTOR parameter indicates "LONGPREAMBLE," or 72 μs if the TXPREAMBLE_TYPE value from the TXVECTOR parameter indicates "SHORTPREAMBLE";

The value of PLCPHeaderTime is 48 μs if the TXPREAMBLE_TYPE value from the TXVECTOR parameter indicates "LONGPREAMBLE," or 24 μs if the TXPREAMBLE_TYPE value from the TXVECTOR parameter indicates "SHORTPREAMBLE."

 Copyright © 2000 IEEE. All rights reserved.

Table 101—High Rate PHY characteristics

Characteristic	Value
aSlotTime	20 μs
aSIFSTime	10 μs
aCCATime	≤15 μs
aRxTxTurnaroundTime	≤5 μs
aTxPLCPDelay	Implementors may choose any value for this delay as long as the requirements of aRxTxTurnaroundTime are met.
aRxPLCPDelay	Implementors may choose any value for this delay as long as the requirements of aSIFSTime and aCCATime are met.
aRxTxSwitchTime	≤5 μs
aTxRampOnTime	Implementors may choose any value for this delay as long as the requirements of aRxTxTurnaroundTime are met.
aTxRampOffTime	Implementors may choose any value for this delay as long as the requirements of aSIFSTime are met.
aTxRFDelay	Implementors may choose any value for this delay as long as the requirements of aRxTxTurnaroundTime are met.
aRxRFDelay	Implementors may choose any value for this delay as long as the requirements of aSIFSTime and aCCATime are met.
aAirPropagationTime	1 μs
aMACProcessingDelay	0 (not applicable)
aPreambleLength	144 μs
aPLCPHeaderLength	48 bits
aMPUMaxLength	$14 \leq x \leq (2^{12} - 1)$
aCWmin	31
aCWmax	1023

18.3.5 Vector descriptions

Several service primitives include a parameter vector. These vectors are a list of parameters as described in Table 102. DATARATE and LENGTH are described in 12.3.4.4 of IEEE Std 802.11, 1999 Edition. The remaining parameters are considered to be management parameters and are specific to this PHY.

Copyright © 2000 IEEE. All rights reserved.

Table 102—Parameter vectors

Parameter	Associated vector	Value
DATARATE	RXVECTOR, TXVECTOR	The rate used to transmit the PSDU in Mbit/s.
LENGTH	RXVECTOR, TXVECTOR	The length of the PSDU in octets.
PREAMBLE_TYPE	RXVECTOR, TXVECTOR	The preamble used for the transmission of this PPDU. This is an enumerated type that can take the value SHORTPREAMBLE or LONGPREAMBLE.
MODULATION	RXVECTOR, TXVECTOR	The modulation used for the transmission of this PSDU. This is an integer where 0 means CCK and 1 means PBCC.

18.4 High Rate PMD sublayer

18.4.1 Scope and field of application

Subclause 18.4 describes the PMD services provided to the PLCP for the High Rate PHY. Also defined in this subclause are the functional, electrical, and RF characteristics required for interoperability of implementations conforming to this specification. The relationship of this specification to the entire High Rate PHY is shown in Figure 137.

.

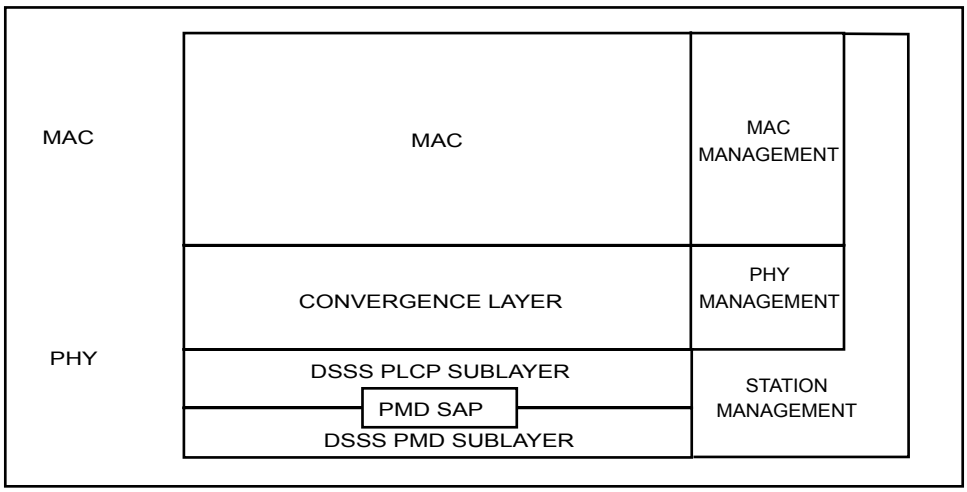

Figure 137—Layer reference model

18.4.2 Overview of service

The High Rate PMD sublayer accepts PLCP sublayer service primitives and provides the actual means by which data is transmitted or received from the medium. The combined functions of the High Rate PMD sublayer primitives and parameters for the receive function result in a data stream, timing information, and

 Copyright © 2000 IEEE. All rights reserved.

associated received signal parameters being delivered to the PLCP sublayer. A similar functionality is provided for data transmission.

18.4.3 Overview of interactions

The primitives associated with the PLCP sublayer to the High Rate PMD fall into two basic categories

a) Service primitives that support PLCP peer-to-peer interactions;
b) Service primitives that have local significance and that support sublayer-to-sublayer interactions.

18.4.4 Basic service and options

All of the service primitives described in this subclause are considered mandatory, unless otherwise specified.

18.4.4.1 PMD_SAP peer-to-peer service primitives

Table 103 indicates the primitives for peer-to-peer interactions.

Table 103—PMD_SAP peer-to-peer service primitives

Primitive	Request	Indicate	Confirm	Response
PMD_DATA	X	X	—	—

18.4.4.2 PMD_SAP sublayer-to-sublayer service primitives

Table 104 indicates the primitives for sublayer-to-sublayer interactions.

Table 104—PMD_SAP sublayer-to-sublayer service primitives

Primitive	Request	Indicate	Confirm	Response
PMD_TXSTART	X	—	—	—
PMD_TXEND	X	—	—	—
PMD_ANTSEL	X	X	—	—
PMD_TXPWRLVL	X	—	—	—
PMD_MODULATION	X	X	—	—
PMD_PREAMBLE	X	X	—	—
PMD_RATE	X	X	—	—
PMD_RSSI	—	X	—	—
PMD_SQ	—	X	—	—
PMD_CS	—	X	—	—
PMD_ED	X	X	—	—

Copyright © 2000 IEEE. All rights reserved.

18.4.5 PMD_SAP detailed service specification

The following subclauses describe the services provided by each PMD primitive.

18.4.5.1 PMD_DATA.request

18.4.5.1.1 Function

This primitive defines the transfer of data from the PLCP sublayer to the PMD entity.

18.4.5.1.2 Semantics of the service primitive

This primitive provides the following parameters.

Parameter	Associated primitive	Value (Mbits/s)	Description
TXD_UNIT	PMD_DATA.request	0,1: 1 00,01,11,10:2 X'0'–X'F': 5.5 X'00'–X'FF': 11	This parameter represents a single block of data which, in turn, is used by the PMD to be differentially encoded into a transmitted symbol. The symbol itself is spread by the PN code prior to transmission.

18.4.5.1.3 When generated

This primitive is generated by the PLCP sublayer to request transmission of a symbol. The data clock for this primitive is supplied by the PMD layer based on the PN code repetition.

18.4.5.1.4 Effect of receipt

The PMD performs the differential encoding, PN code modulation, and transmission of data.

18.4.5.2 PMD_DATA.indicate

18.4.5.2.1 Function

This primitive defines the transfer of data from the PMD entity to the PLCP sublayer.

18.4.5.2.2 Semantics of the service primitive

This primitive provides the following parameters.

Parameter	Associated primitive	Value (Mbits/s)	Description
RXD_UNIT	PMD_DATA.indicate	0,1: 1 00,01,11,10:2 X'0' - X'F': 5.5 X'00' - X'FF': 11	This parameter represents a single symbol that has been demodulated by the PMD entity.

 Copyright © 2000 IEEE. All rights reserved.

18.4.5.2.3 When generated

This primitive, which is generated by the PMD entity, forwards received data to the PLCP sublayer. The data clock for this primitive is supplied by the PMD layer based on the PN code repetition.

18.4.5.2.4 Effect of receipt

The PLCP sublayer either interprets the bit or bits that are recovered as part of the PLCP convergence procedure, or passes the data to the MAC sublayer as part of the PSDU.

18.4.5.3 PMD_MODULATION.request

18.4.5.3.1 Function

This primitive, which is generated by the PHY PLCP sublayer, selects the modulation code that is used by the High Rate PHY for transmission.

18.4.5.3.2 Semantics of the service primitive

This primitive provides the following parameters.

Parameter	Associated primitive	Value	Description
MODULATION	PMD_MODULATION.request PMD_MODULATION.indicate	1 MbBarker, 2 MbBarker, 5.5 CCK, 11 CCK, 5.5 PBCC, or 11 PBCC	In Receive mode, the MODULATION parameter informs the PLCP layer which PHY data modulation was used to process the PSDU portion of the PPDU. Subclause 18.4.6.3 provides further information on the High Rate PHY modulation codes.

18.4.5.3.3 When generated

This primitive is generated by the PLCP sublayer to change or set the current High Rate PHY modulation code used for the PSDU portion of a PPDU. The PMD_MODULATION.request primitive is normally issued prior to issuing the PMD_TXSTART command.

18.4.5.3.4 Effect of receipt

The receipt of PMD_MODULATION selects the modulation that is used for all subsequent PSDU transmissions. This code is used for transmission only. The High Rate PHY shall still be capable of receiving all the required High Rate PHY modulations. This primitive, which is generated by the PMD entity, sets the state of the PHY for demodulation of the appropriate modulation.

18.4.5.4 PMD_PREAMBLE.request

18.4.5.4.1 Function

This primitive, which is generated by the PHY PLCP sublayer, selects the preamble mode that is used by the High Rate PHY for transmission.

Copyright © 2000 IEEE. All rights reserved.

18.4.5.4.2 Semantics of the service primitive

This primitive provides the following parameters.

Parameter	Associated primitive	Value	Description
PREAMBLE	PMD_PREAMBLE.request	‘0’ for long ‘1’ for short	PREAMBLE selects which of the High Rate PHY preamble types is used for PLCP transmission. Subclause 18.2.2 provides further information on the High Rate PHY preamble modes.

18.4.5.4.3 When generated

This primitive is generated by the PLCP sublayer to change or set the current High Rate PHY preamble mode used for the PLCP portion of a PPDU. The PMD_PREAMBLE.request primitive is normally issued prior to issuing the PMD_TXSTART command.

18.4.5.4.4 Effect of receipt

The receipt of PMD_PREAMBLE selects the preamble mode that is used for all subsequent PSDU transmissions. This mode is used for transmission only. The High Rate PHY shall still be capable of receiving all the required High Rate PHY preambles. This primitive sets the state of the PHY for modulation of the appropriate mode.

18.4.5.5 PMD_PREAMBLE.indicate

18.4.5.5.1 Function

This primitive, which is generated by the PMD sublayer, indicates which preamble mode was used to receive the PLCP portion of the PPDU.

18.4.5.5.2 Semantics of the service primitive

This primitive provides the following parameters.

Parameter	Associated primitive	Value	Description
PREAMBLE	PMD_PREAMBLE.indicate	‘0’ for long ‘1’ for short	In RECEIVE mode, the PREAMBLE parameter informs the PLCP layer which of the High Rate PHY preamble modes was used to send the PLCP portion of the PPDU.

 Copyright © 2000 IEEE. All rights reserved.

18.4.5.5.3 When generated

This primitive is generated by the PMD sublayer when the PLCP preamble has been properly detected.

18.4.5.5.4 Effect of receipt

This parameter is provided to the PLCP layer for information only.

18.4.5.6 PMD_TXSTART.request

18.4.5.6.1 Function

As a result of receiving a PHY_DATA.request from the MAC, the PLCP issues this primitive, which initiates PPDU transmission by the PMD layer.

18.4.5.6.2 Semantics of the service primitive

This primitive has no parameters.

18.4.5.6.3 When generated

This primitive is generated by the PLCP sublayer to initiate the PMD layer transmission of the PPDU. The PHY-DATA.request primitive is provided to the PLCP sublayer prior to issuing the PMD_TXSTART command.

18.4.5.6.4 Effect of receipt

PMD_TXSTART initiates transmission of a PPDU by the PMD sublayer.

18.4.5.7 PMD_TXEND.request

18.4.5.7.1 Function

This primitive, which is generated by the PHY PLCP sublayer, ends PPDU transmission by the PMD layer.

18.4.5.7.2 Semantics of the service primitive

This primitive has no parameters.

18.4.5.7.3 When generated

This primitive is generated by the PLCP sublayer to terminate the PMD layer transmission of the PPDU.

18.4.5.7.4 Effect of receipt

PMD_TXEND terminates transmission of a PPDU by the PMD sublayer.

18.4.5.8 PMD_ANTSEL.request

18.4.5.8.1 Function

This primitive, which is generated by the PHY PLCP sublayer, selects the antenna used by the PHY for transmission or reception (when diversity is disabled).

Copyright © 2000 IEEE. All rights reserved.

18.4.5.8.2 Semantics of the service primitive

This primitive provides the following parameters

Parameter	Associated primitive	Value	Description
ANT_STATE	PMD_ANTSEL.request PMD_ANTSEL.indicate	1 to 256	ANT_STATE selects which of the available antennas should be used for transmit. The number of available antennas is determined from the MIB table parameters, aSuprtRxAntennas and aSuprtTxAntennas.

18.4.5.8.3 When generated

This primitive is generated by the PLCP sublayer to select a specific antenna for transmission (or reception when diversity is disabled).

18.4.5.8.4 Effect of receipt

PMD_ANTSEL immediately selects the antenna specified by ANT_STATE.

18.4.5.9 PMD_TXPWRLVL.request

18.4.5.9.1 Function

This primitive, which is generated by the PHY PLCP sublayer, selects the power level used by the PHY for transmission.

18.4.5.9.2 Semantics of the service primitive

This primitive provides the following parameters.

Parameter	Associated primitive	Value	Description
TXPWR_LEVEL	PHY-TXPWR_LEVEL.request	0, 1, 2, 3 (maximum of 4 levels)	TXPWR_LEVEL selects which of the optional transmit power levels should be used for the current PPDU transmission. The number of available power levels is determined by the MIB parameter dot11NumberSupportedPowerLevels. Subclause 18.4.7.2 provides further information on the optional High Rate PHY power-level control capabilities.

 Copyright © 2000 IEEE. All rights reserved.

18.4.5.9.3 When generated

This primitive is generated by the PLCP sublayer to select a specific transmit power. This primitive is applied prior to setting PMD_TXSTART to the transmit state.

18.4.5.9.4 Effect of receipt

PMD_TXPWRLVL immediately sets the transmit power level given by TXPWR_LEVEL.

18.4.5.10 PMD_RATE.request

18.4.5.10.1 Function

This primitive, which is generated by the PHY PLCP sublayer, selects the data rate that shall be used by the High Rate PHY for transmission.

18.4.5.10.2 Semantics of the service primitive

This primitive provides the following parameters.

Parameter	Associated primitive	Value (Mbits/s)	Description
RATE	PMD_RATE.indicate PMD_RATE.request	X’0A’ or 1 X'14' for 2 X’37’ for 5.5 X’6E’ for 11	RATE selects which of the High Rate PHY data rates is used for PSDU transmission. Subclause 18.4.6.3 provides further information on the High Rate PHY data rates. The High Rate PHY rate change capability is described in 18.2.

18.4.5.10.3 When generated

This primitive is generated by the PLCP sublayer to change or set the current High Rate PHY data rate used for the PSDU portion of a PPDU.

18.4.5.10.4 Effect of receipt

The receipt of PMD_RATE selects the rate that is used for all subsequent PSDU transmissions. This rate is used for transmission only. The High Rate PHY shall still be capable of receiving all the required High Rate PHY data rates.

18.4.5.11 PMD_RSSI.indicate

18.4.5.11.1 Function

This optional primitive may be generated by the PMD to provide the received signal strength to the PLCP.

Copyright © 2000 IEEE. All rights reserved.

18.4.5.11.2 Semantics of the service primitive

This primitive provides the following parameters.

Parameter	Associated primitive	Value	Description
RSSI	PMD_RSSI.indicate	0–8 bits of RSSI	The RSSI is a measure of the RF energy received by the High Rate PHY.

18.4.5.11.3 When generated

This primitive is generated by the PMD when the High Rate PHY is in the receive state. It is continuously available to the PLCP which, in turn, provides the parameter to the MAC entity.

18.4.5.11.4 Effect of receipt

This parameter is provided to the PLCP layer for information only. The RSSI may be used in conjunction with SQ as part of a CCA scheme.

18.4.5.12 PMD_SQ.indicate

18.4.5.12.1 Function

This optional primitive may be generated by the PMD to provide an indication of the SQ of the High Rate PHY PN code correlation to the PLCP. SQ is a measure of the quality of BARKER code lock, providing an effective measure during the full reception of a PLCP preamble and header.

18.4.5.12.2 Semantics of the service primitive

This primitive provides the following parameters

Parameter	Associated primitive	Value	Description
SQ	PMD_SQ.indicate	0–8 bits of SQ	This primitive is a measure of the signal quality received by the HR/DSSS PHY.

18.4.5.12.3 When generated

This primitive is generated by the PMD when the High Rate PHY is in the receive state and Barker code lock is achieved. It is continuously available to the PLCP which, in turn, provides the parameter to the MAC entity.

18.4.5.12.4 Effect of receipt

This parameter is provided to the PLCP layer for information only. The SQ may be used in conjunction with RSSI as part of a CCA scheme.

 Copyright © 2000 IEEE. All rights reserved.

18.4.5.13 PMD_CS.indicate

This primitive, which is generated by the PMD, shall indicate to the PLCP layer that the receiver has acquired (locked) the Barker code and data is being demodulated.

18.4.5.13.1 Function

This primitive, which is generated by the PMD, shall indicate to the PLCP layer that the receiver has acquired (locked) the Barker code and data is being demodulated.

18.4.5.13.2 Semantics of the service primitive

This primitive provides the following parameters.

Parameter	Associated primitive	Value	Description
PMD_CS	PMD_CS.indicate	‘0’for DISABLED ‘1’ for ENABLED	The PMD_CS (carrier sense) primitive, in conjunction with PMD_ED, provide CCA status through the PLCP layer PHY-CCA primitive. PMD_CS indicates a binary status of ENABLED or DISABLED. PMD_CS is ENABLED when the correlator SQ indicated in PMD_SQ is greater than the correlation threshold. PMD_CS is DISABLED when the PMD_SQ falls below the correlation threshold.

18.4.5.13.3 When generated

This primitive is generated by the PMD sublayer when the High Rate PHY is receiving a PPDU and the PN code has been acquired.

18.4.5.13.4 Effect of receipt

This indicator is provided to the PLCP for forwarding to the MAC entity for information purposes through the PHYCCA indicator. This parameter shall indicate that the RF medium is busy and occupied by a High Rate PHY signal. The High Rate PHY should not be placed into the transmit state when PMD_CS is ENABLED.

Copyright © 2000 IEEE. All rights reserved.

18.4.5.14 PMD_ED.indicate

18.4.5.14.1 Function

This optional primitive may be generated by the PMD to provide an indication that the receiver has detected RF energy indicated by the PMD_RSSI primitive that is above a predefined threshold.

18.4.5.14.2 Semantics of the service primitive

This primitive provides the following parameters.

Parameter	Associated primitive	Value	Description
PMD_ED	PMD_ED.indicate	‘0’ for DISABLED ‘1’ for ENABLED	The PMD_ED (energy detect) primitive, along with the PMD_SQ, provides CCA status at the PLCP layer through the PHYCCA primitive. PMD_ED indicates a binary status of ENABLED or DISABLED. PMD_ED is ENABLED when the RSSI indicated in PMD_RSSI is greater than the ED_THRESHOLD parameter. PMD_ED is DISABLED when the PMD_RSSI falls below the energy detect threshold.

18.4.5.14.3 When generated

This primitive is generated by the PHY sublayer when the PHY is receiving RF energy from any source that exceeds the ED_THRESHOLD parameter.

18.4.5.14.4 Effect of receipt

This indicator is provided to the PLCP for forwarding to the MAC entity for information purposes through the PMD_ED indicator. This parameter shall indicate that the RF medium may be busy with an RF energy source that is not High Rate PHY compliant. If a High Rate PHY source is being received, the PMD_CS function is enabled shortly after the PMD_ED function is enabled.

18.4.5.15 PMD_ED.request

18.4.5.15.1 Function

This optional primitive may be generated by the PLCP to set a set a value for the energy detect ED_THRESHOLD.

 Copyright © 2000 IEEE. All rights reserved.

18.4.5.15.2 Semantics of the service primitive

This primitive provides the following parameters.

Parameter	Associated primitive	Value	Description
PMD_ED	PMD_ED.request	ED_THRESHOLD	ED_THRESHOLD is the threshold that the indicated RSSI should be greater than in order for PMD_ED to be enabled. PMD_ED is DISABLED when the PMD_RSSI falls below the energy detect threshold.

18.4.5.15.3 When generated

This primitive is generated by the PLCP sublayer to change or set the current High Rate PHY energy detect threshold.

18.4.5.15.4 Effect of receipt

The receipt of PMD_ED immediately changes the energy detect threshold as set by the ED_THRESHOLD parameter.

18.4.6 PMD operating specifications, general

Subclauses 18.4.6.1 through 18.4.6.14 provide general specifications for the High Rate PMD sublayer. These specifications apply to both the receive and transmit functions and general operation of a High Rate PHY.

18.4.6.1 Operating frequency range

The High Rate PHY shall operate in the 2.4–2.4835 GHz frequency range, as allocated by regulatory bodies in the USA and Europe, or in the 2.471–2.497 GHz frequency range, as allocated by regulatory authority in Japan.

18.4.6.2 Number of operating channels

The channel center frequencies and CHNL_ID numbers shall be as shown in Table 105. The FCC (US), IC (Canada), and ETSI (Europe) specify operation from 2.4–2.4835 GHz. For Japan, operation is specified as 2.471–2.497 GHz. France allows operation from 2.4465–2.4835 GHz, and Spain allows operation from 2.445–2.475 GHz.

Copyright © 2000 IEEE. All rights reserved.

For each supported regulatory domain, all channels in Table 105 marked with an "X" shall be supported.

Table 105—High Rate PHY frequency channel plan

		Regulatory domains					
CHNL_ID	**Frequency (MHz)**	**X'10' FCC**	**X'20' IC**	**X'30' ETSI**	**X'31' Spain**	**X'32' France**	**X'40' MKK**
1	2412	X	X	X	—	—	—
2	2417	X	X	X	—	—	—
3	2422	X	X	X	—	—	—
4	2427	X	X	X	—	—	—
5	2432	X	X	X	—	—	—
6	2437	X	X	X	—	—	—
7	2442	X	X	X	—	—	—
8	2447	X	X	X	—	—	—
9	2452	X	X	X	—	—	—
10	2457	X	X	X	X	X	—
11	2462	X	X	X	X	X	—
12	2467	—	—	X	—	X	—
13	2472	—	—	X	—	X	—
14	2484	—	—	—	—	—	X

In a multiple cell network topology, overlapping and/or adjacent cells using different channels can operate simultaneously without interference if the distance between the center frequencies is at least 25 MHz. Channel 14 shall be designated specifically for operation in Japan.

18.4.6.3 Modulation and channel data rates

Four modulation formats and data rates are specified for the High Rate PHY. The basic access rate shall be based on 1 Mbit/s DBPSK modulation. The enhanced access rate shall be based on 2 Mbit/s DQPSK. The extended direct sequence specification defines two additional data rates. The High Rate access rates shall be based on the CCK modulation scheme for 5.5 Mbit/s and 11 Mbit/s. An optional PBCC mode is also provided for potentially enhanced performance.

18.4.6.4 Spreading sequence and modulation for 1 and 2 Mbit/s

The following 11-chip Barker sequence shall be used as the PN code sequence for the 1 and 2 Mbit/s modulation:

$$+1, -1, +1, +1, -1, +1, +1, +1, -1, -1, -1$$

The leftmost chip shall be output first in time. The first chip shall be aligned at the start of a transmitted symbol. The symbol duration shall be exactly 11 chips long.

 Copyright © 2000 IEEE. All rights reserved.

The DBPSK encoder for the basic access rate is specified in Table 106. The DQPSK encoder is specified in Table 107. (In these tables, +jω shall be defined as counterclockwise rotation.)

Table 106—1 Mbit/s DBPSK encoding table

Bit input	Phase change (+jω)
0	0
1	π

Table 107—2 Mbit/s DQPSK encoding table

Dibit pattern (d0,d1) (d0 is first in time)	Phase change (+jω)
00	0
01	π/2
11	π
10	3π/2 (–π/2)

18.4.6.5 Spreading sequences and modulation for CCK modulation at 5.5 Mbit/s and 11 Mbit/s

For the CCK modulation modes, the spreading code length is 8 and is based on complementary codes. The chipping rate is 11 Mchip/s. The symbol duration shall be exactly 8 complex chips long.

The following formula shall be used to derive the CCK code words that shall be used for spreading both 5.5 Mbit/s and 11 Mbit/s:

$$c = \{e^{j(\varphi_1+\varphi_2+\varphi_3+\varphi_4)}, e^{j(\varphi_1+\varphi_3+\varphi_4)}, e^{j(\varphi_1+\varphi_2+\varphi_4)}, -e^{j(\varphi_1+\varphi_4)}, e^{j(\varphi_1+\varphi_2+\varphi_3)}, e^{j(\varphi_1+\varphi_3)}, -e^{j(\varphi_1+\varphi_2)}, e^{j\varphi_1}\} \quad (1)$$

where C is the code word

C = {c0 to c7}

The terms: φ1, φ2, φ3, and φ4 are defined in 18.4.6.5.2 for 5.5 Mbit/s and 18.4.6.5.3 for 11 Mbit/s.

This formula creates 8 complex chips (c0 to c7), where c0 is transmitted first in time.

This is a form of the generalized Hadamard transform encoding, where φ1 is added to all code chips, φ2 is added to all odd code chips, φ3 is added to all odd pairs of code chips, and φ4 is added to all odd quads of code chips.

Copyright © 2000 IEEE. All rights reserved.

The term φ1 modifies the phase of all code chips of the sequence and shall be DQPSK encoded for 5.5 Mbit/s and 11 Mbit/s. This shall take the form of rotating the whole symbol by the appropriate amount relative to the phase of the preceding symbol. Note that the chip c7 of the symbol defined above is the chip that indicates the symbol's phase and is transmitted last.

18.4.6.5.1 Cover code for CCK

The fourth and seventh chips are rotated 180° by a cover sequence to optimize the sequence correlation properties and minimize dc offsets in the codes. This can be seen by the minus sign on the fourth and seventh terms in Equation (1).

18.4.6.5.2 CCK 5.5 Mbit/s modulation

At 5.5 Mbit/s 4 bits (d0 to d3; d0 first in time) are transmitted per symbol.

The data bits d0 and d1 encode φ1 based on DQPSK. The DQPSK encoder is specified in Table 108. (In the table, +jω shall be defined as counterclockwise rotation.) The phase change for φ1 is relative to the phase φ1 of the preceding symbol. For the header to PSDU transition, the phase change for φ1 is relative to the phase of the preceding DQPSK (2 Mbit/s) symbol. That is, the phase of the last symbol of the CRC-16 is the reference phase for the first symbol generated from the PSDU octets. (See the definition in 18.4.6.4 for the reference phase of this Barker coded symbol.) A "+1" chip in the Barker code shall represent the same carrier phase as a "+1" chip in the CCK code.

All odd-numbered symbols generated from the PSDU octets shall be given an extra 180 degree (π) rotation, in addition to the standard DQPSK modulation as shown in Table 108. The symbols of the PSDU shall be numbered starting with "0" for the first symbol, for the purposes of determining odd and even symbols. That is, the PSDU transmission starts on an even-numbered symbol.

Table 108—DQPSK encoding table

Dibit pattern (d0, d1) (d0 is first in time)	Even symbols phase change (+jω)	Odd symbols phase change (+jω)
00	0	π
01	π/2	3π/2 (–π/2)
11	π	0
10	3π/2 (–π/2)	π/2

 Copyright © 2000 IEEE. All rights reserved.

The data dibits d2 and d3 CCK encode the basic symbol, as specified in Table 109. This table is derived from the formula above by setting $\varphi 2 = (d2 \times \pi) + \pi/2$, $\varphi 3 = 0$, and $\varphi 4 = d3 \times \pi$. In this table, d2 and d3 are in the order shown, and the complex chips are shown c0 to c7 (left to right), with c0 transmitted first in time.

Table 109—5.5 Mbit/s CCK encoding table

d2, d3	c1	c2	c3	c4	c5	c6	c7	c8
00	1j	1	1j	–1	1j	1	–1j	1
01	–1j	–1	–1j	1	1j	1	–1j	1
10	–1j	1	–1j	–1	–1j	1	1j	1
11	1j	–1	1j	1	–1j	1	1j	1

18.4.6.5.3 CCK 11 Mbit/s modulation

At 11 Mbit/s, 8 bits (d0 to d7; d0 first in time) are transmitted per symbol.

The first dibit (d0, d1) encodes $\varphi 1$ based on DQPSK. The DQPSK encoder is specified in Table 108. The phase change for $\varphi 1$ is relative to the phase $\varphi 1$ of the preceding symbol. In the case of header to PSDU transition, the phase change for $\varphi 1$ is relative to the phase of the preceding DQPSK symbol. All odd-numbered symbols of the PSDU are given an extra 180 degree (π) rotation, in accordance with the DQPSK modulation shown in Table 108. Symbol numbering starts with “0” for the first symbol of the PSDU.

The data dibits (d2, d3), (d4, d5), and (d6, d7) encode $\varphi 2$, $\varphi 3$, and $\varphi 4$, respectively, based on QPSK as specified in Table 110. Note that this table is binary (not Grey) coded.

Table 110—QPSK encoding table

Dibit pattern [di, d(i+1)] (di is first in time)	Phase
00	0
01	$\pi/2$
10	π
11	$3\pi/2$ ($-\pi/2$)

18.4.6.6 DSSS/PBCC data modulation and modulation rate (optional)

This optional coding scheme uses a binary convolutional coding with a 64-state binary convolutional code (BCC) and a cover sequence. The output of the BCC is encoded jointly onto the I and Q channels, as described in this subclause.

The encoder for this scheme is shown in Figure 138. Incoming data is first encoded with a binary convolutional code. A cover code is applied to the encoded data prior to transmission through the channel.

Copyright © 2000 IEEE. All rights reserved.

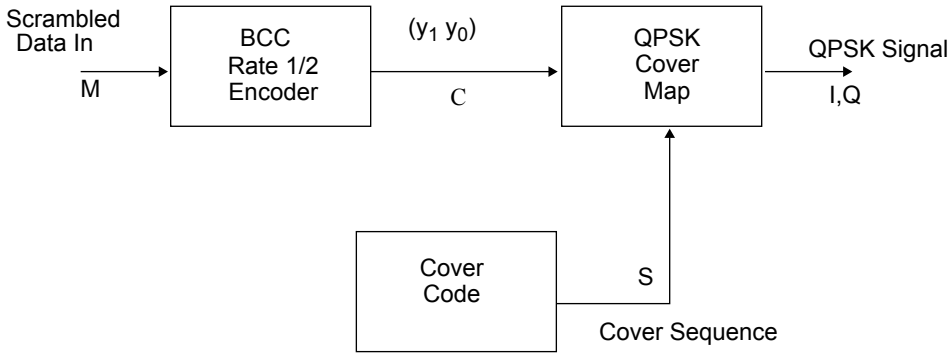

Figure 138—PBCC modulator scheme

The binary convolutional code that is used is a 64-state, rate ∫ code. The generator matrix for the code is given as

$$G = [D^6 + D^4 + D^3 + D + 1, \quad D^6 + D^5 + D^4 + D^3 + D^2 + 1]$$

or in octal notation, it is given by

$$G = [133, \quad 175]$$

Since the system is frame (PPDU) based, the encoder shall be in state zero (i.e., all memory elements contain zero at the beginning of each PPDU). The encoder must also be placed in a known state at the end of each PPDU to prevent the data bits near the end of the PPDU from being substantially less reliable than those early on in the PPDU. To place the encoder in a known state at the end of a PPDU, at least six deterministic bits must be input immediately following the last data bit input to the convolutional encoder. This is achieved by appending one octet containing all zeros to the end of the PPDU prior to transmission, and discarding the final octet of each received PPDU. In this manner, the decoding process can be completed reliably on the last data bits.

An encoder block diagram is shown in Figure 139. It consists of six memory elements. For every data bit input, two output bits are generated.

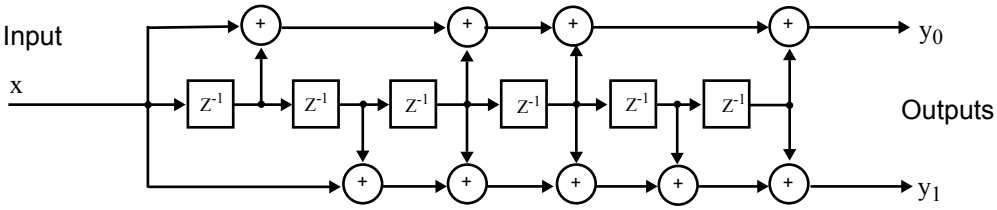

Figure 139—PBCC convolutional encoder

 Copyright © 2000 IEEE. All rights reserved.

The output of the binary convolutional code described above is mapped to a constellation using one of two possible rates. The 5.5 Mbps rate uses BPSK, and the 11 Mbps rate uses QPSK. In QPSK mode, each pair of output bits from the binary convolutional code is used to produce one symbol; in BPSK mode, each pair of bits from the BCC is taken serially (y_0 first) and used to produce two BPSK symbols. This yields a throughput of one bit per symbol in QPSK mode and one-half a bit per symbol in BPSK mode.

The phase of the first complex chip of the PSDU shall be defined with respect to the phase of the last chip of the PCLP header (i.e., the last chip of the CRC check). The bits $(y_1\ y_0) = (0, 0)$ shall indicate the same phase as the last chip of the CRC check. The other three combinations of $(y_1\ y_0)$ shall be defined with respect to this reference phase, as shown in Figure 140.

The mapping from BCC outputs to PSK constellation points in BPSK and QPSK modes is determined by a pseudo-random cover sequence. This is shown for both modes in Figure 140. Note that this is an absolute phase table, not differential as in CCK.

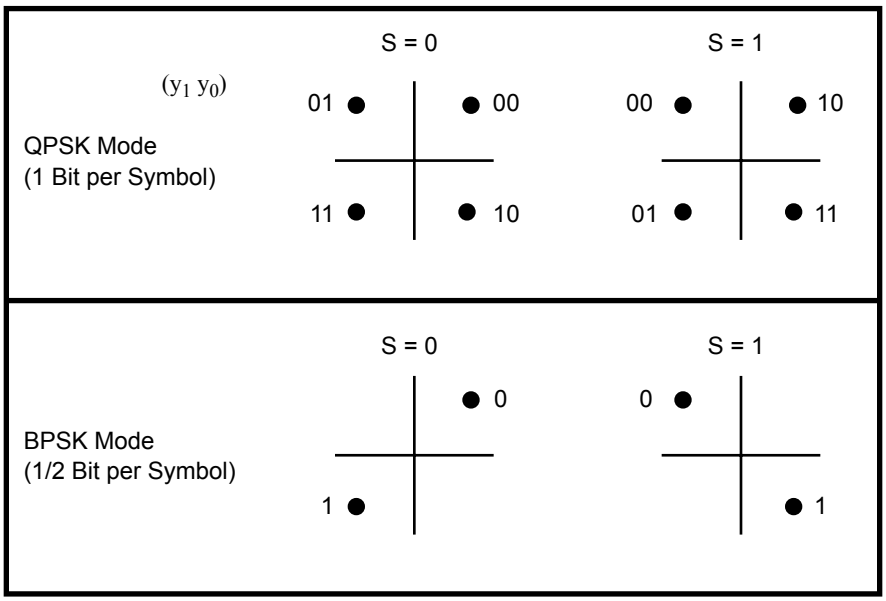

Figure 140—Cover code mapping

The pseudo-random cover sequence is generated from a seed sequence. The 16-bit seed sequence is 0011001110001011, where the first bit of the sequence in time is the leftmost bit. This sequence in octal notation is given as 150714, where the least significant bit is the first in time. This seed sequence is used to generate the 256-bit pseudo-random cover sequence, which is used in the mapping of the current PSK symbol. It is the current binary value of this sequence at every given point in time that is taken as S in Figure 140.

This sequence of 256 bits is produced by taking the first sixteen bits of the sequence as the seed sequence, the second sixteen bits as the seed sequence cyclically left rotated by three, the third sixteen bits as the seed sequence cyclically left rotated by six, etc. If ci is the ith bit of the seed sequence, where $0 \le I \le 15$, then the sequence that is used to cover the data is given row-wise as follows:

Copyright © 2000 IEEE. All rights reserved.

c0 c1 c2 c3 c4 c5 c6 c7 c8 c9 c10 c11 c12 c13 c14 c15
c3 c4 c5 c6 c7 c8 c9 c10 c11 c12 c13 c14 c15 c0 c1 c2
c6 c7 c8 c9 c10 c11 c12 c13 c14 c15 c0 c1 c2 c3 c4 c5
c9 c10 c11 c12 c13 c14 c15 c0 c1 c2 c3 c4 c5 c6 c7 c8
c12 c13 c14 c15 c0 c1 c2 c3 c4 c5 c6 c7 c8 c9 c10 c11
c15 c0 c1 c2 c3 c4 c5 c6 c7 c8 c9 c10 c11 c12 c13 c14
c2 c3 c4 c5 c6 c7 c8 c9 c10 c11 c12 c13 c14 c15 c0 c1
c5 c6 c7 c8 c9 c10 c11 c12 c13 c14 c15 c0 c1 c2 c3 c4
c8 c9 c10 c11 c12 c13 c14 c15 c0 c1 c2 c3 c4 c5 c6 c7
c11 c12 c13 c14 c15 c0 c1 c2 c3 c4 c5 c6 c7 c8 c9 c10
c14 c15 c0 c1 c2 c3 c4 c5 c6 c7 c8 c9 c10 c11 c12 c13
c1 c2 c3 c4 c5 c6 c7 c8 c9 c10 c11 c12 c13 c14 c15 c0
c4 c5 c6 c7 c8 c9 c10 c11 c12 c13 c14 c15 c0 c1 c2 c3
c7 c8 c9 c10 c11 c12 c13 c14 c15 c0 c1 c2 c3 c4 c5 c6
c10 c11 c12c13 c14 c15 c0 c1 c2 c3 c4 c5 c6 c7 c8 c9
c13 c14 c15 c0 c1 c2 c3 c4 c5 c6 c7 c8 c9 c10 c11 c12

For PPDUs with more than 256 data bits, this sequence of 256 bits is simply repeated.

18.4.6.7 Channel Agility (optional)

This Channel Agility option allows an implementation to overcome some inherent difficulty with static channel assignments (a tone jammer), without burdening all implementations with the added cost of this capability. When the Channel Agility option is enabled, the PHY shall meet the requirements on channel switching and settling time, as described in 18.4.6.12, and the hop sequences described below. This option can also be used to implement IEEE 802.11-compliant systems that are interoperable between both FH and DS modulations. Annex F contains a description of the expected behavior when such networks are employed.

18.4.6.7.1 Hop sequences

The hop sequences for each of the specified geographical areas are defined with two sets. High Rate frequency channels referred to in this subclause are defined in Table 105.

The first set (Figure 141 and Figure 143) uses non-overlapping frequency channels to allow the High Rate systems to minimize interference degradation. The synchronization of frequency hopping is performed by the MAC sublayer management entity, as defined in 11.1.15 of IEEE 802.11, 1999 Edition for the FH PHY. The PLME SAP service primitives used to command a new frequency channel are defined in 10.4 of IEEE Std 802.11, 1999 Edition.

The second set (Figure 142 and Figure 144) uses half overlapping frequency channels, with 10 MHz center frequency spacing, to enable interoperability with 1 Mbit/s and 2 Mbit/s FH systems hopping with the approved IEEE 802.11 hop sequences. The High Rate hop frequency is calculated from the specific 1 MHz channel chosen for a given hop by picking the closest High Rate channel within the set. Where there is a choice of two DSSS channels, the lower one shall be the one chosen. Therefore, the chosen channel shall be no more than ± 5 MHz of the channel center of the FH channel. When operating on the FH channels beyond ± 5 MHz of the closest High Rate channel specified in the set, the High Rate mode shall not be used and all FH transmissions shall occur at the 1 Mbit/s or 2 Mbit/s rate.

 Copyright © 2000 IEEE. All rights reserved.

18.4.6.7.2 Operating channels

The operating channels for specified geographical areas are defined in Table 111 and Table 112.

Table 111—North American operating channels

Set	Number of channels	HR/DSSS channel numbers
1	3	1, 6, 11
2	6	1, 3, 5, 7, 9, 11

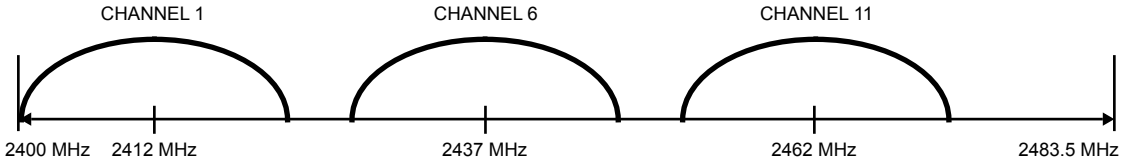

Figure 141—North American channel selection—non-overlapping

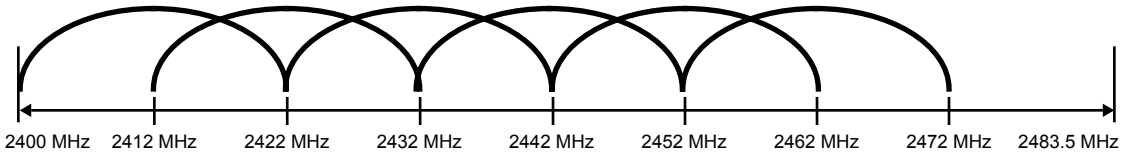

Figure 142—North American channel selection—overlapping

Table 112—European operating channels (except France and Spain)

Set	Number of channels	HR/DSSS channel numbers
1	3	1, 7, 13
2	7	1, 3, 5, 7, 9, 11, 13

Copyright © 2000 IEEE. All rights reserved.

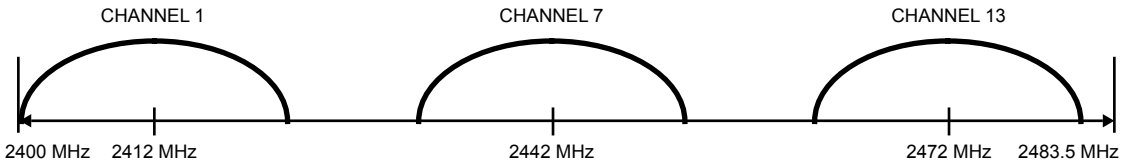

Figure 143—European channel selection—non-overlapping

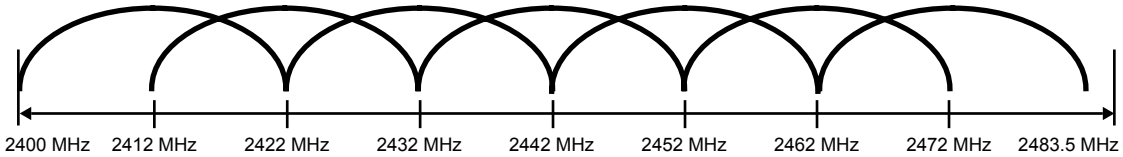

Figure 144—European channel selection—overlapping

18.4.6.7.3 Hop patterns

A frequency-hopping pattern, Fx, consists of a permutation of all frequency channels defined in Table 111 and Table 112. For a given pattern number, x, the hopping sequence can be written as

Fx = {fx (1), fx (2), ..., fx (p)}

where

fx (i) is the channel number (as defined in 14.6.4) for ith frequency in the xth hopping pattern;

p is the number of hops in pseudo-random hopping pattern before repeating sequence (79 for North America and most of Europe).

The frequency-hopping patterns for Set 1 of each geographic area are based on the hop patterns in Table 113 and Table 114.

The frequency-hopping patterns for Set 2 of each geographic area are defined by the 1/2 Mbit/s FH PHY hop sequences, as described in the FH PHY (14.6.8). Given the hopping pattern number, x, and the index for the next frequency, i (in the range 1 to p), the DS channel number (as defined in 18.4.6.2) shall be selected with the following algorithm:

North America

f'x (i) = f'x (i) for 1 ≤ f'x (i) ≤ 11;
f'x (i) = null for f'x (i) < 1 and f'x (i) > 11;
f'x (i) = 2 × Int [({[b(i) + x] mod (79) +2} – 6) / 10] – 1;
with b(i) defined in Table 42 (14.6.8) of IEEE Std 802.11, 1999 Edition.

 Copyright © 2000 IEEE. All rights reserved.

Most of Europe

f'x (i) = f'x (i) for 1 ≤ f'x (i) ≤ 13;
f'x (i) = null for f'x (i) < 1 and f'x (i) > 13;
f'x (i) = 2 × Int [({[b(i) + x] mod (79) +2} – 6) / 10] – 1;
with b(i) defined in Table 42 (14.6.8) of IEEE Std 802.11, 1999 Edition.

Table 113—North American Set 1 hop patterns

Index	Pattern 1	Pattern 2
1	1	1
2	6	11
3	11	6

Table 114—European Set 1 hop patterns (except France and Spain)

Index	Pattern 1	Pattern 2
1	1	1
2	7	13
3	13	7

18.4.6.8 Transmit and receive in-band and out-of-band spurious emissions

The High Rate PHY shall conform with in-band and out-of-band spurious emissions as set by regulatory bodies. For the USA, refer to FCC 15.247, 15.205, and 15.209. For Europe, refer to ETS 300–328. For Japan, refer to the MPT ordinance for Regulating Radio Equipment, Article 49-20.

18.4.6.9 Transmit-to-receive (TX-to-RX) turnaround time

The TX-to-RX turnaround time shall be less than 10 μs, including the power-down ramp specified in 18.4.7.6.

The TX-to-RX turnaround time shall be measured at the air interface from the trailing edge of the last transmitted symbol to the valid CCA detection of the incoming signal. The CCA should occur within 25 μs (10 μs for turnaround time, plus 15 μs for energy detect), or by the next slot boundary occurring after the 25 μs has elapsed (see 18.4.8.4). A receiver input signal 3 dB above the ED threshold described in 18.4.8.4 shall be present at the receiver.

18.4.6.10 Receive-to-transmit (RX-to-TX) turnaround time

The RX-to-TX turnaround time shall be measured at the MAC/PHY interface using PHYTXSTART.request, and shall be 5 μs. This includes the transmit power-up ramp described in 18.4.7.6.

Copyright © 2000 IEEE. All rights reserved.

18.4.6.11 Slot time

The slot time for the High Rate PHY shall be the sum of the RX-to-TX turnaround time (5 μs) and the energy detect time (15 μs specified in 18.4.8.4). The propagation delay shall be regarded as being included in the energy detect time.

18.4.6.12 Channel switching/settling time

When the Channel Agility option is enabled, the time to change from one operating channel frequency to another, as specified in 18.4.6.2, is 224 μs. A conformant PMD meets this switching time specification when the operating channel center frequency has settled to within ±60 kHz of the nominal channel center. Stations shall not transmit until after the channel change settling time.

18.4.6.13 Transmit and receive antenna port impedance

The impedance of the transmit and receive antenna port(s) shall be 50 Ω if the port is exposed.

18.4.6.14 Transmit and receive operating temperature range

Two temperature ranges are specified for full operation compliance to the High Rate PHY. Type 1 shall be defined as 0 °C to 40 °C, and is designated for office environments. Type 2 shall be defined as –30 °C to +70 °C, and is designated for industrial environments.

18.4.7 PMD transmit specifications

Subclauses 18.4.7.1 through 18.4.7.8 describe the transmit functions and parameters associated with the PMD sublayer.

18.4.7.1 Transmit power levels

The maximum allowable output power, as measured in accordance with practices specified by the appropriate regulatory bodies, is shown in Table 115. In the USA, the radiated emissions should also conform with the ANSI uncontrolled radiation emission standards (IEEE Std C95.1-1999).

Table 115—Transmit power levels

Maximum output power	Geographic location	Compliance document
1000 mW	USA	FCC 15.247
100 mW (EIRP)	Europe	ETS 300–328
10 mW/MHz	Japan	MPT ordinance for Regulating Radio Equipment, Article 49-20

18.4.7.2 Transmit power level control

Power control shall be provided for transmitted power greater than 100 mW. A maximum of four power levels may be provided. As a minimum, a radio capable of transmission greater than 100 mW shall be capable of switching power back to 100 mW or less.

 Copyright © 2000 IEEE. All rights reserved.

18.4.7.3 Transmit spectrum mask

The transmitted spectral products shall be less than –30 dBr (dB relative to the SINx/x peak) for

f_c – 22 MHz < f < f_c –11 MHz; and
f_c + 11 MHz < f < f_c + 22 MHz;

and shall be less than –50 dBr for

f < f_c – 22 MHz; and
f > f_c + 22 MHz.

where

f_c is the channel center frequency.

The transmit spectral mask is shown in Figure 145. The measurements shall be made using a 100 kHz resolution bandwidth and a 100 kHz video bandwidth.

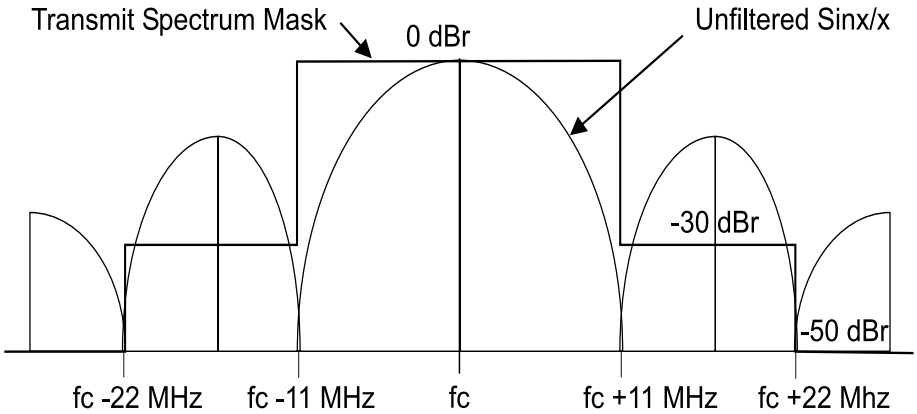

Figure 145—Transmit spectrum mask

18.4.7.4 Transmit center frequency tolerance

The transmitted center frequency tolerance shall be ±25 ppm maximum.

18.4.7.5 Chip clock frequency tolerance

The PN code chip clock frequency tolerance shall be better than ±25 ppm maximum. It is highly recommended that the chip clock and the transmit frequency be locked (coupled) for optimum demodulation performance. If these clocks are locked, it is recommended that bit 2 of the SERVICE field be set to a 1, as indicated in 18.2.3.4.

Copyright © 2000 IEEE. All rights reserved.

18.4.7.6 Transmit power-on and power-down ramp

The transmit power-on ramp for 10% to 90% of maximum power shall be no greater than 2 μs. The transmit power-on ramp is shown in Figure 146.

The transmit power-down ramp for 90% to 10% maximum power shall be no greater than 2 μs. The transmit power-down ramp is shown in Figure 147.

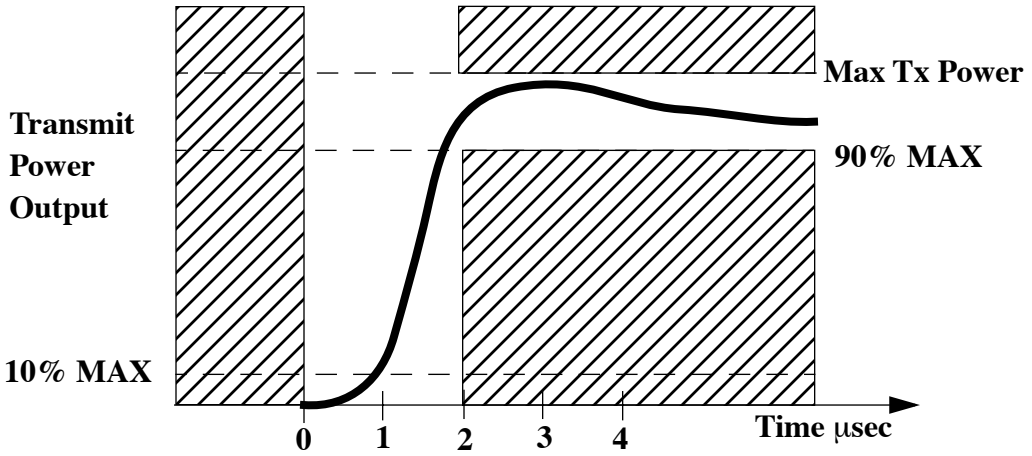

Figure 146—Transmit power-on ramp

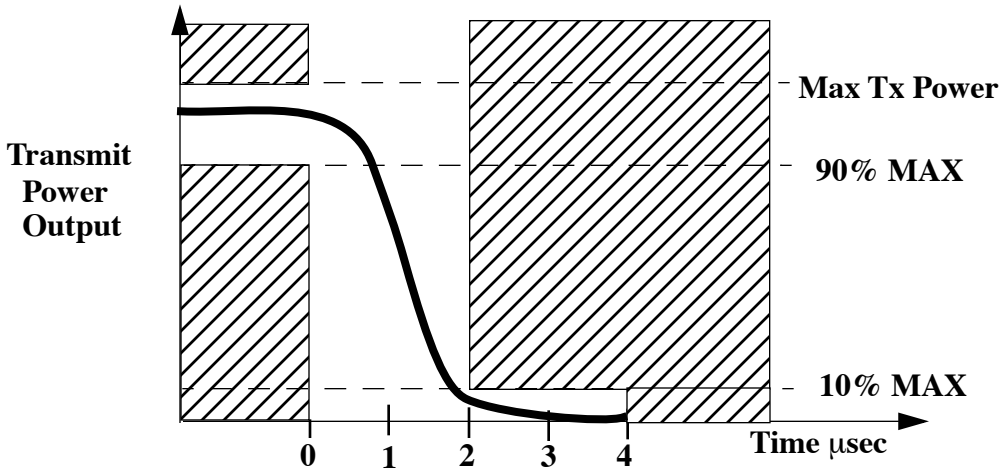

Figure 147—Transmit power-down ramp

The transmit power ramps shall be constructed such that the High Rate PHY emissions conform with spurious frequency product specification defined in 18.4.6.8.

 Copyright © 2000 IEEE. All rights reserved.

18.4.7.7 RF carrier suppression

The RF carrier suppression, measured at the channel center frequency, shall be at least 15 dB below the peak SIN(x)/x power spectrum. The RF carrier suppression shall be measured while transmitting a repetitive 01 data sequence with the scrambler disabled using DQPSK modulation. A 100 kHz resolution bandwidth shall be used to perform this measurement.

18.4.7.8 Transmit modulation accuracy

The transmit modulation accuracy requirement for the High Rate PHY shall be based on the difference between the actual transmitted waveform and the ideal signal waveform. Modulation accuracy shall be determined by measuring the peak vector error magnitude during each chip period. Worst-case vector error magnitude shall not exceeded 0.35 for the normalized sampled chip data. The ideal complex I and Q constellation points associated with DQPSK modulation, (0.707,0.707), (0.707, –0.707), (–0.707, 0.707), (–0.707, –0.707), shall be used as the reference. These measurements shall be from baseband I and Q sampled data after recovery through a reference receiver system.

Figure148 illustrates the ideal DQPSK constellation points and range of worst-case error specified for modulation accuracy.

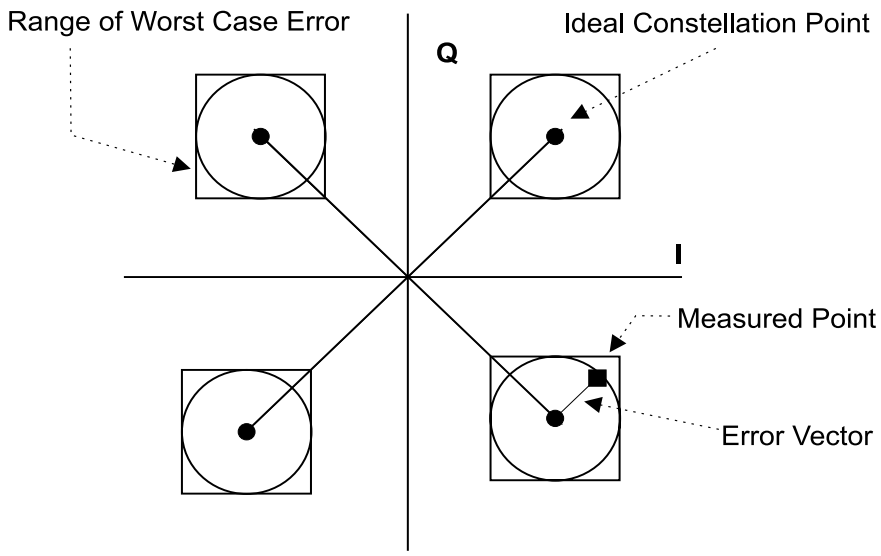

Figure 148—Modulation accuracy measurement example

Error vector measurement requires a reference receiver capable of carrier lock. All measurements shall be made under carrier lock conditions. The distortion induced in the constellation by the reference receiver shall be calibrated and measured. The test data error vectors described below shall be corrected to compensate for the reference receiver distortion.

The IEEE 802.11-compatible radio shall provide an exposed TX chip clock, which shall be used to sample the I and Q outputs of the reference receiver.

The measurement shall be made under the conditions of continuous DQPSK transmission using scrambled all one's.

Copyright © 2000 IEEE. All rights reserved.

The eye pattern of the I channel shall be used to determine the I and Q sampling point. The chip clock provided by the vendor radio shall be time delayed, such that the samples fall at a 1/2 chip period offset from the mean of the zero crossing positions of the eye (see Figure 149). This is the ideal center of the eye and may not be the point of maximum eye opening.

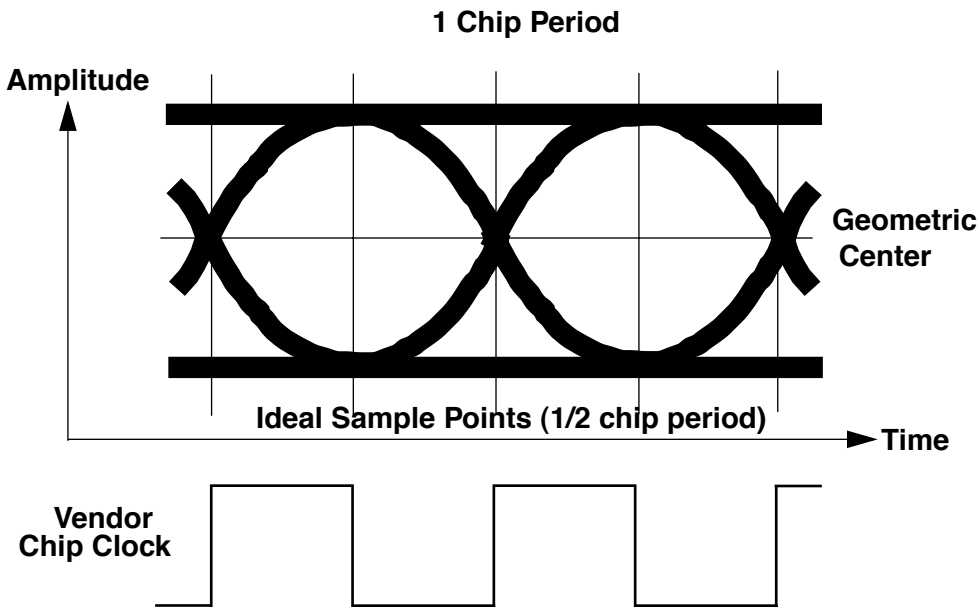

Figure 149—Chip clock alignment with baseband eye pattern

Using the aligned chip clock, 1000 samples of the I and Q baseband outputs from the reference receiver are captured. The vector error magnitudes shall be calculated as follows:

Calculate the dc offsets for I and Q samples

$$I_{\text{mean}} = \sum_{n=0}^{999} I(n)/1000$$

$$Q_{\text{mean}} = \sum_{n=0}^{999} Q(n)/1000$$

Calculate the dc corrected I and Q samples for all n = 1000 sample pairs

$$I_{dc}(n) = I(n) - I_{\text{mean}}$$

$$Q_{dc}(n) = Q(n) - Q_{\text{mean}}$$

 Copyright © 2000 IEEE. All rights reserved.

Calculate the average magnitude of I and Q samples

$$I_{\mathrm{mag}} = \sum_{n=0}^{999} \left| I_{\mathrm{dc}}(n) \right| / 1000$$

$$Q_{\mathrm{mag}} = \sum_{n=0}^{999} \left| Q_{\mathrm{dc}}(n) \right| / 1000$$

Calculate the normalized error vector magnitude for the $I_{dc}(n)/Q_{dc}(n)$ pairs

$$V_{\mathrm{err}}(n) = \left[\frac{1}{2} \times \left(\{ \left| I_{\mathrm{dc}}(n) \right| - I_{\mathrm{mag}} \}^2 + \{ \left| Q_{\mathrm{dc}}(n) \right| - Q_{\mathrm{mag}} \}^2 \right) \right]^{\frac{1}{2}} - V_{\mathrm{correction}}$$

where

$V_{correction}$ is the error induced by the reference receiver system.

A vendor High Rate PHY implementation shall be compliant if for all n = 1000 samples, the following condition is met:

$V_{err}(n) < 0.35$

18.4.8 PMD receiver specifications

Subclauses 18.4.8.1 through 18.4.8.4 describe the receive functions and parameters associated with the PMD sublayer.

18.4.8.1 Receiver minimum input level sensitivity

The frame error ratio (FER) shall be less than 8×10^{-2} at a PSDU length of 1024 octets for an input level of –76 dBm measured at the antenna connector. This FER shall be specified for 11 Mbit/s CCK modulation. The test for the minimum input level sensitivity shall be conducted with the energy detection threshold set less than or equal to –76 dBm.

18.4.8.2 Receiver maximum input level

The receiver shall provide a maximum FER of 8×10^{-2} at a PSDU length of 1024 octets for a maximum input level of –10 dBm measured at the antenna. This FER shall be specified for 11 Mbit/s CCK modulation.

18.4.8.3 Receiver adjacent channel rejection

Adjacent channel rejection is defined between any two channels with ≥25 MHz separation in each channel group, as defined in 18.4.6.2.

The adjacent channel rejection shall be equal to or better than 35 dB, with an FER of 8×10^{-2} using 11 Mbit/s CCK modulation described in 18.4.6.3 and a PSDU length of 1024 octets.

Copyright © 2000 IEEE. All rights reserved.

The adjacent channel rejection shall be measured using the following method.

Input an 11 Mbit/s CCK modulated signal at a level 6 dB greater than specified in 18.4.8.1. In an adjacent channel (≥ 25 MHz separation as defined by the channel numbering), input a signal modulated in a similar fashion, which adheres to the transmit mask specified in 18.4.7.3, to a level 41 dB above the level specified in 18.4.8.1. The adjacent channel signal shall be derived from a separate signal source. It cannot be a frequency shifted version of the reference channel. Under these conditions, the FER shall be no worse than 8×10^{-2}.

18.4.8.4 CCA

The High Rate PHY shall provide the capability to perform CCA according to at least one of the following three methods:

— CCA Mode 1: Energy above threshold. CCA shall report a busy medium upon detecting any energy above the ED threshold.

— CCA Mode 4: Carrier sense with timer. CCA shall start a timer whose duration is 3.65 ms and report a busy medium only upon the detection of a High Rate PHY signal. CCA shall report an IDLE medium after the timer expires and no High Rate PHY signal is detected. The 3.65 ms timeout is the duration of the longest possible 5.5 Mbit/s PSDU.

— CCA Mode 5: A combination of carrier sense and energy above threshold. CCA shall report busy at least while a High Rate PPDU with energy above the ED threshold is being received at the antenna.

The energy detection status shall be given by the PMD primitive, PMD_ED. The carrier sense status shall be given by PMD_CS. The status of PMD_ED and PMD_CS is used in the PLCP convergence procedure to indicate activity to the MAC through the PHY interface primitive, PHY-CCA.indicate.

A busy channel shall be indicated by PHY-CCA.indicate of class BUSY. A clear channel shall be indicated by PHY-CCA.indicate of class IDLE.

The PHY MIB attribute, dot11CCAModeSupported, shall indicate the appropriate operation modes. The PHY shall be configured through the PHY MIB attribute, dot11CurrentCCAMode.

The CCA shall indicate TRUE if there is no energy detect or carrier sense. The CCA parameters are subject to the following criteria:

a) If a valid High Rate signal is detected during its preamble within the CCA assessment window, the energy detection threshold shall be less than or equal to –76 dBm for TX power > 100 mW; –73 dBm for 50 mW < TX power ≤ 100 mW; and –70 dBm for TX power ≤ 50 mW.

b) With a valid signal (according to the CCA mode of operation) present at the receiver antenna within 5 μs of the start of a MAC slot boundary, the CCA indicator shall report channel busy before the end of the slot time. This implies that the CCA signal is available as an exposed test point. Refer to Figure 47 of IEEE Std 802.11, 1999 Edition for a slot time boundary definition.

c) In the event that a correct PLCP header is received, the High Rate PHY shall hold the CCA signal inactive (channel busy) for the full duration, as indicated by the PLCP LENGTH field. Should a loss of carrier sense occur in the middle of reception, the CCA shall indicate a busy medium for the intended duration of the transmitted PPDU. Upon reception of a correct PLCP header, the timer of CCA Mode 2 shall be overridden by this requirement.

Conformance to the High Rate PHY CCA shall be demonstrated by applying an equivalent High Rate compliant signal above the appropriate ED threshold (item a), such that all conditions described in items (b) and (c) above are demonstrated.

 Copyright © 2000 IEEE. All rights reserved.

Annex A

(normative)

Protocol implementation conformance statement (PICS) proforma

A.4.3 IUT configuration

***Add the entry CF7 to the existing table in Annex A*:**

Item	IUT configuration	References	Status	Support
	What is the configuration of the IUT?			
* CF1	Access point (AP)	5.2	O.1	Yes ❑ No ❑
* CF2	Independent station (**not** an AP)	5.2	O.1	Yes ❑ No ❑
* CF3	Frequency-hopping spread spectrum PHY layer for the 2.4 GHz band		O.2	Yes ❑ No ❑
* CF4	Direct sequence spread spectrum PHY layer for the 2.4 GHz band		O.2	Yes ❑ No ❑
* CF5	Infrared PHY layer		O.2	Yes ❑ No ❑
* CF7	High-speed PHY layer		O.2	Yes ❑ No ❑

Add a new subclause A. 4.9 for the optional HR/DSSS parameters:

A.4.9 High Rate, direct sequence PHY functions

Are the following PHY features supported?

Item	PHY Feature	References	Status	Support
HRDS1	Long Preamble and header procedures	18.2	M	Yes ❑ No ❑
HRDS1.1	Long DS preamble prepended on TX	18.2.1	M	Yes ❑ No ❑
HRDS1.2	Long PLCP integrity check generation	18.2.3, 18.2.3.6	M	Yes ❑ No ❑
HRDS1.3	TX rate change capability	18.2.3.3	M	Yes ❑ No ❑
HRDS1.4	Supported data rates	18.1, 18.2.3.3	M	Yes ❑ No ❑
HRDS1.5	Data scrambler	18.2.4	M	Yes ❑ No ❑
HRDS1.6	Scrambler initialization	18.2.4	M	Yes ❑ No ❑
*HRDS2	Channel Agility option	18.3.2	O	Yes ❑ No ❑
*HRDS3	Short Preamble and header procedures	18.2	O	Yes ❑ No ❑

Copyright © 2000 IEEE. All rights reserved.

HRDS3.1	Short Preamble prepended on TX	18.2.2	HRDS3:M	Yes ❑ No ❑ N/A ❑
HRDS3.2	Short header transmission	18.2.3.8, 18.2.3.9, 18.2.3.10, 18.2.3.11, 18.2.3.12, 18.2.3.13, 18.2.3.14	HRDS3:M	Yes ❑ No ❑ N/A ❑
HRDS4	Long Preamble process on RX	18.2.6	M	Yes ❑ No ❑
HRDS4.1	PLCP format	18.2.6	M	Yes ❑ No ❑
HRDS4.2	PLCP integrity check verify	18.2.6	M	Yes ❑ No ❑
HRDS4.3	RX Rate change capability	18.2.6	M	Yes ❑ No ❑
HRDS4.4	Data whitener descrambler	18.2.6	M	Yes ❑ No ❑
*HRDS5	Short Preamble process on RX	18.2.6	HRDS3,M	Yes ❑ No ❑ N/A ❑
HRDS5.1	PLCP format	18.2.6	HRDS6:M	Yes ❑ No ❑ N/A ❑
HRDS5.2	PLCP integrity check verify	18.2.6	HRDS6:M	Yes ❑ No ❑ N/A ❑
HRDS5.3	RX rate change capability	18.2.6	HRDS6:M	Yes ❑ No ❑ N/A ❑
HRDS5.4	Data whitener descrambler	18.2.6	HRDS6:M	Yes ❑ No ❑ N/A ❑
*HRDS6	Operating channel capability	—	—	—
*HRDS6.1	North America (FCC)	18.4.6.2	HRDS7:O.3	Yes ❑ No ❑ N/A ❑
HRDS6.1.1	Channel 1	18.4.6.2	HRDS7.1:M	Yes ❑ No ❑ N/A ❑
HRDS6.1.2	Channel 2	18.4.6.2	HRDS7.1:M	Yes ❑ No ❑ N/A ❑
HRDS6.1.3	Channel 3	18.4.6.2	HRDS7.1:M	Yes ❑ No ❑ N/A ❑
HRDS6.1.4	Channel 4	18.4.6.2	HRDS7.1:M	Yes ❑ No ❑ N/A ❑
HRDS6.1.5	Channel 5	18.4.6.2	HRDS7.1:M	Yes ❑ No ❑ N/A ❑
HRDS6.1.6	Channel 6	18.4.6.2	HRDS7.1:M	Yes ❑ No ❑ N/A ❑
HRDS6.1.7	Channel 7	18.4.6.2	HRDS7.1:M	Yes ❑ No ❑ N/A ❑
HRDS6.1.8	Channel 8	18.4.6.2	HRDS7.1:M	Yes ❑ No ❑ N/A ❑
HRDS6.1.9	Channel 9	18.4.6.2	HRDS7.1:M	Yes ❑ No ❑ N/A ❑

 Copyright © 2000 IEEE. All rights reserved.

HRDS6.1.10	Channel 10	18.4.6.2	HRDS7.1:M	Yes ❑ No ❑ N/A ❑
HRDS6.1.11	Channel 11	18.4.6.2	HRDS7.1:M	Yes ❑ No ❑ N/A ❑
*HRDS6.2	Canada (IC)	18.4.6.2	HRDS7:O.3	Yes ❑ No ❑ N/A ❑
HRDS6.2.1	Channel 1	18.4.6.2	HRDS7.2:M	Yes ❑ No ❑ N/A ❑
HRDS6.2.2	Channel 2	18.4.6.2	HRDS7.2:M	Yes ❑ No ❑ N/A ❑
HRDS6.2.3	Channel 3	18.4.6.2	HRDS7.2:M	Yes ❑ No ❑ N/A ❑
HRDS6.2.4	Channel 4	18.4.6.2	HRDS7.2:M	Yes ❑ No ❑ N/A ❑
HRDS6.2.5	Channel 5	18.4.6.2	HRDS7.2:M	Yes ❑ No ❑ N/A ❑
HRDS6.2.6	Channel 6	18.4.6.2	HRDS7.2:M	Yes ❑ No ❑ N/A ❑
HRDS6.2.7	Channel 7	18.4.6.2	HRDS7.2:M	Yes ❑ No ❑ N/A ❑
HRDS6.2.8	Channel 8	18.4.6.2	HRDS7.2:M	Yes ❑ No ❑ N/A ❑
HRDS6.2.9	Channel 9	18.4.6.2	HRDS7.2:M	Yes ❑ No ❑ N/A ❑
HRDS6.2.10	Channel 10	18.4.6.2	HRDS7.2:M	Yes ❑ No ❑ N/A ❑
HRDS6.2.11	Channel 11	18.4.6.2	HRDS7.2:M	Yes ❑ No ❑ N/A ❑
*HRDS6.3	Europe (ETSI)	18.4.6.2	HRDS7:O.3	Yes ❑ No ❑ N/A ❑
HRDS6.3.1	Channel 1	18.4.6.2	HRDS7.3:M	Yes ❑ No ❑ N/A ❑
HRDS6.3.2	Channel 2	18.4.6.2	HRDS7.3:M	Yes ❑ No ❑ N/A ❑
HRDS6.3.3	Channel 3	18.4.6.2	HRDS7.3:M	Yes ❑ No ❑ N/A ❑
HRDS6.3.4	Channel 4	18.4.6.2	HRDS7.3:M	Yes ❑ No ❑ N/A ❑
HRDS6.3.5	Channel 5	18.4.6.2	HRDS7.3:M	Yes ❑ No ❑ N/A ❑
HRDS6.3.6	Channel 6	18.4.6.2	HRDS7.3:M	Yes ❑ No ❑ N/A ❑
HRDS6.3.7	Channel 7	18.4.6.2	HRDS7.3:M	Yes ❑ No ❑ N/A ❑
HRDS6.3.8	Channel 8	18.4.6.2	HRDS7.3:M	Yes ❑ No ❑ N/A ❑

Copyright © 2000 IEEE. All rights reserved.

HRDS6.3.9	Channel 9	18.4.6.2	HRDS7.3:M	Yes ❑ No ❑ N/A ❑
HRDS6.3.10	Channel 10	18.4.6.2	HRDS7.3:M	Yes ❑ No ❑ N/A ❑
HRDS6.3.11	Channel 11	18.4.6.2	HRDS7.3:M	Yes ❑ No ❑ N/A ❑
HRDS6.3.12	Channel 12	18.4.6.2	HRDS7.3:M	Yes ❑ No ❑ N/A ❑
HRDS6.3.13	Channel 13	18.4.6.2	HRDS7.3:M	Yes ❑ No ❑ N/A ❑
*HRDS6.4	France	18.4.6.2	HRDS7:O.3	Yes ❑ No ❑ N/A ❑
HRDS6.4.1	Channel 10	18.4.6.2	HRDS7.4:M	Yes ❑ No ❑ N/A ❑
HRDS6.4.2	Channel 11	18.4.6.2	HRDS7.4:M	Yes ❑ No ❑ N/A ❑
HRDS6.4.3	Channel 12	18.4.6.2	HRDS7.4:M	Yes ❑ No ❑ N/A ❑
HRDS6.4.4	Channel 13	18.4.6.2	HRDS7.4:M	Yes ❑ No ❑ N/A ❑
*HRDS6.5	Spain	18.4.6.2	HRDS7:O.3	Yes ❑ No ❑ N/A ❑
HRDS6.5.1	Channel 10	18.4.6.2	HRDS7.5:M	Yes ❑ No ❑ N/A ❑
HRDS6.5.2	Channel 11	18.4.6.2	HRDS7.5:M	Yes ❑ No ❑ N/A ❑
*HRDS6.6	Japan (Rcr)	18.4.6.2	HRDS7:O.3	Yes ❑ No ❑ N/A ❑
HRDS7	Hop sequences		HRDS2:M	Yes ❑ No ❑ N/A ❑
HRDS8	CCK bits to symbol mapping			
HRDS8.1	5.5 Mbit/s	18.4.6.5	M	Yes ❑ No ❑
HRDS8.2	11 Mbit/s	18.4.6.5	M	Yes ❑ No ❑
*HRDS9	PBCC bits to symbol mappings	18.4.6.6	O	
HRDS9.1	5.5 Mbit/s	18.4.6.6	HRDS10:M	Yes ❑ No ❑
HRDS9.2	11 Mbit/s	18.4.6.6	HRDS10:M	Yes ❑ No ❑
*HRDS10	CCA functionality	18.4.8.4		
HRDS10.1	CCA Mode 1, energy only (RSSI above threshold)	18.4.8.4	HRDS11:O.4	Yes ❑ No ❑
HRDS10.2	CCA Mode 4, carrier sense with timer	18.4.8.4	HRDS11:O.4	Yes ❑ No ❑
HRDS10.3	CCA Mode 5, energy detect with High Rate CS	18.4.8.4	HRDS11:O.4	Yes ❑ No ❑

 Copyright © 2000 IEEE. All rights reserved.

HRDS10.4	Hold CCA busy for packet duration of a correctly received PLCP, but carrier lost during reception of MPDU.	18.2.6	M	Yes ❑ No ❑
HRDS10.5	Hold CCA busy for packet duration of a correctly received, but out of spec, PLCP.	18.2.6	M	Yes ❑ No ❑
HRDS11	Transmit antenna selection	18.4.5.8,	O	Yes ❑ No ❑
HRDS12	Receive antenna diversity	18.4.5.8, 18.4.5.9	O	Yes ❑ No ❑
*HRDS13	Antenna port(s) availability	18.4.6.8	O	Yes ❑ No ❑
HRDS13.1	If available (50 Ω impedance)	18.4.6.8	HRDS14:M	Yes ❑ No ❑ N/A ❑
*HRDS14	Transmit power level support	18.4.5.9, 18.4.7.2	O	Yes ❑ No ❑
HRDS14.1	If greater than 100 mW capability	18.4.7.2	HRDS15:M	Yes ❑ No ❑ N/A ❑
*HRDS15	Radio type (temperature range)	18.4.6.14		
HRDS15.1	Type 1	18.4.6.14	HRDS16:O.5	Yes ❑ No ❑ N/A ❑
HRDS15.2	Type 2	18.4.6.14	HRDS16:O.5	Yes ❑ No ❑ N/A ❑
HRDS16	Spurious emissions conformance	18.4.6.8	M	Yes ❑ No ❑
HRDS17	TX-to-RX turnaround time	18.4.6.9	M	Yes ❑ No ❑
HRDS18	RX-to-TX turnaround time	18.4.6.10	M	Yes ❑ No ❑
HRDS19	Slot time	18.4.6.11	M	Yes ❑ No ❑
HRDS20	ED reporting time	18.4.6.10, 18.4.8.4	M	Yes ❑ No ❑
HRDS21	Minimum transmit power level	18.4.7.2	M	Yes ❑ No ❑
HRDS22	Transmit spectral mask conformance	18.4.7.3	M	Yes ❑ No ❑
HRDS23	Transmitted center frequency tolerance	18.4.7.4	M	Yes ❑ No ❑
HRDS24	Chip clock frequency tolerance	18.4.7.5	M	Yes ❑ No ❑
HRDS25	Transmit power on ramp	18.4.7.6	M	Yes ❑ No ❑
HRDS26	Transmit power down ramp	18.4.7.6	M	Yes ❑ No ❑
HRDS27	RF carrier suppression	18.4.7.7	M	Yes ❑ No ❑
HRDS28	Transmit modulation accuracy	18.4.7.8	M	Yes ❑ No ❑
HRDS29	Receiver minimum input level sensitivity	18.4.8.1	M	Yes ❑ No ❑
HRDS30	Receiver maximum input level	18.4.8.2	M	Yes ❑ No ❑
HRDS31	Receiver adjacent channel rejection	18.4.8.3	M	Yes ❑ No ❑
HRDS32	Management information base	13.1, 18.3.2, Annex C	M	Yes ❑ No ❑
HRDS32.1	PHY object class	13.1, 18.3.3	M	Yes ❑ No ❑

Copyright © 2000 IEEE. All rights reserved.

Annex C

(normative)

Formal description of MAC operation

For the HR/DSSS PHY, replace the use of aMPDUDurationFactor, aPreambleLength, and aPLCPHeaderLength with the use of PLME-TXTIME.request and PLME-TXTIME.confirm primitives in the formal description, by updating the following diagrams.

 Copyright © 2000 IEEE. All rights reserved.

Package macsorts 3127_e\PHY_Params(31)

```
/*****************************************************************
 *       Generic PHY Parameter Set sort
 *****************************************************************/
/* Generic PHY parameter element for signals related to Beacons */
/* and Probe Responses that are PHY-type independent. */
syntype PhyParms = Octetstring   endsyntype PhyParms;
```

```
NEWTYPE PhyChrstcs struct
  aSlotTime Usec;
  aSifsTime Usec;
  aCCATime Usec;
  aRxTxTurnaroundTime Usec;
  aTxPLCPDelay Usec;
  aRxPLCPDelay Usec;
  aRxTxSwitchTime Usec;
  aTxRampOnTime Usec;
  aTxRampOffTime Usec;
  aTxRFDelay Usec;
  aRxRFDelay Usec;
  aAirPropagationTime Usec;
  aMACProcessingDelay Usec;
  aPreambleLength Usec;
  aPLCPHeaderLength Usec;
  aMPDUMaxLength Integer;
  aCWmin Integer;
  aCWmax Integer;
EndNewType PhyChrstcs;
```

Copyright © 2000 IEEE. All rights reserved.

```
use macsorts ;
```

Package macmib

3204_e\PhyOperation(5)

```
/*****************************************************************
 *      PhyOperation Table
 *      (values shown are mostly for FH PHY)
 *****************************************************************/
synonym FHphy Integer = 01; /* enumerated dot11PHYType value */
synonym DSphy Integer = 02; /* enumerated dot11PHYType value */
synonym IRPhy Integer = 03; /* enumerated dot11PHYType value */
synonym dot11PHYType  Integer = FHphy;
remote dot11CurrentRegDomain  Integer nodelay;
synonym dot11TempType Integer = 01;

/*****************************************************************************************
*  PhyCharacteristic Parameters (values shown are mostly for FH PHY )
*****************************************************************************************/
/* NOTE:  The PhyCharacteristics are defined as synonyms because
   their values are static during MAC operation.  It is assumed
   that , during each initialization of MAC operation, current
   values for each of these parameters are obtained from the
   PHY using the PlmeCharacteristics primitive. */
remote procedure TxTime;  returns Integer;
synonym aSlotTime  Usec = (aCcaTime + aRxTxTurnaroundTime +
    aAirPropagationTime + aMacProcessingTime);
synonym aCcaTime  Usec = 27;
synonym aRxTxTurnaroundTime Usec = (aTxPlcpDelay + aRxTxSwitchTime +
    aTxRampOnTime + aTxRfDelay);
synonym aTxPlcpDelay  Usec = 1;
synonym aRxTxSwitchTime  Usec = 10;
synonym aTxRampOnTime  Usec = 8;
synonym aTxRfDelay  Usec = 1;
synonym aSifsTime Usec = (aRxRfDelay + aRxPlcpDelay +
    aMacProcessingTime + aRxTxTurnaroundTime);
synonym aRxRfDelay  Usec = 4;
synonym aRxPlcpDelay  Usec = 2;
synonym aMacProcessingTime  Usec = 2;
synonym aTxRampOffTime  Usec = 8;
synonym aPreambleLength  Usec = 96;
synonym aPlcpHeaderLength  Usec = 32;
synonym aMpduMaxLength Integer = 4095;
synonym aAirPropagationTime  Usec = 1;
synonym aCWmax  Integer = 1023;
synonym aCWmin  Integer = 15;
```

 Copyright © 2000 IEEE. All rights reserved.

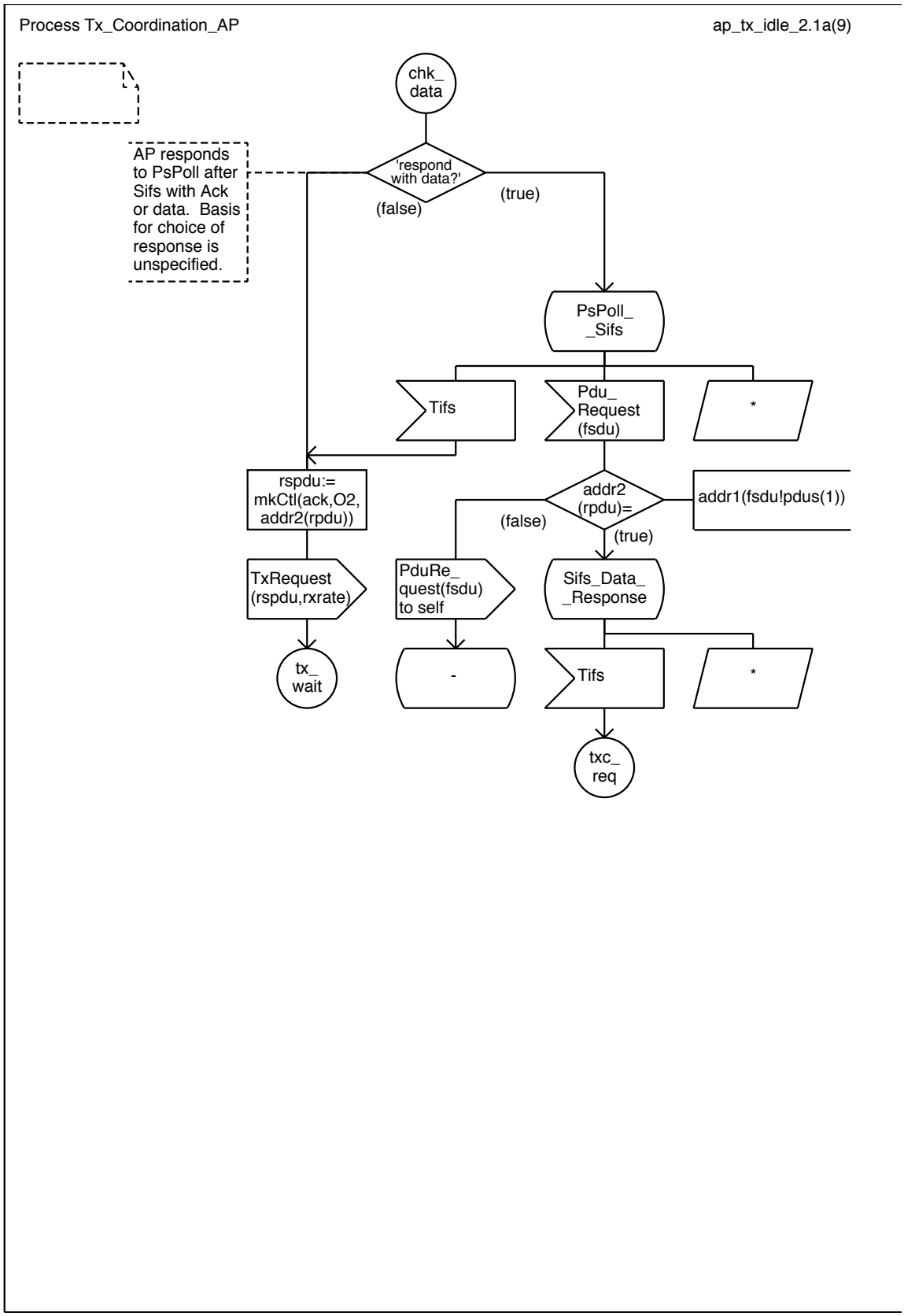

Copyright © 2000 IEEE. All rights reserved.

Package macsorts 3125_e\RateAndDurationSorts(31)

```
/*****************************************************************
 *       Multi-rate support sorts
 *****************************************************************/
newtype Rate   inherits Octet   operators all;
  adding  operators
    calcDur : Rate, Integer -> Integer; /* converts (rate,bitCount) to integer usec */
    rateVal : Rate -> Rate; /* clears high-order bit */
    basicRate : Rate -> Rate; /* sets high-order bit */
    isBasic : Rate -> Boolean; /* true if high-order bit set */
  axioms
    for all r in Rate(    for all i in Integer(    for all b in Boolean(
          calcDur(r, i) == ((((10000000 + (octetVal(r and 0x7F) - 1)) /
              (500 * octetVal(r and 0x7F))) * i) + 9999) / 10000;
          rateVal(r) == r and 0x7F;          basicRate(r) == r or 0x80;
          isBasic(r) == (r and 0x80) = 0x80; )));
endnewtype Rate;
syntype RateString = Octetstring   endsyntype RateString;
```

 Copyright © 2000 IEEE. All rights reserved.

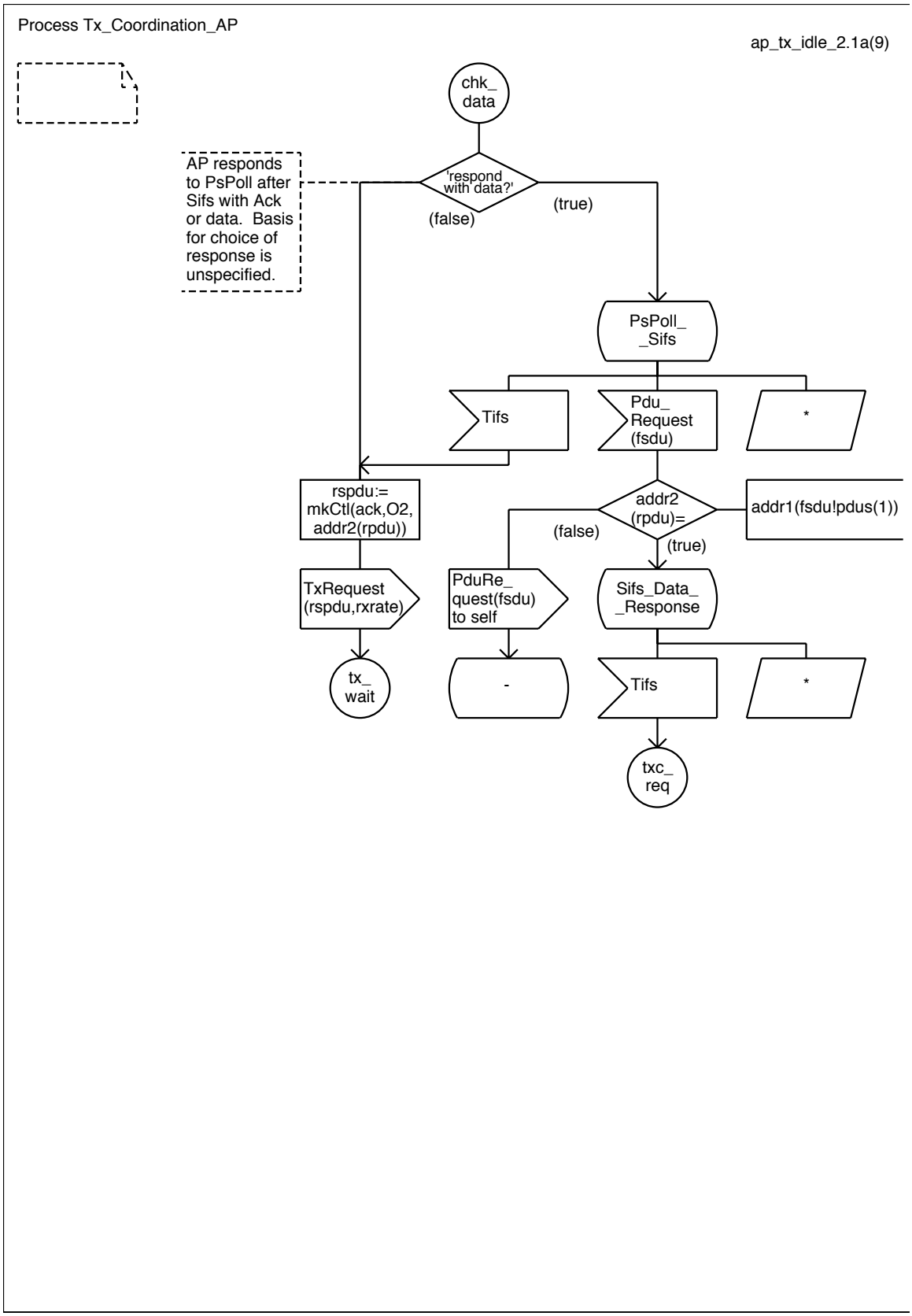

Copyright © 2000 IEEE. All rights reserved.

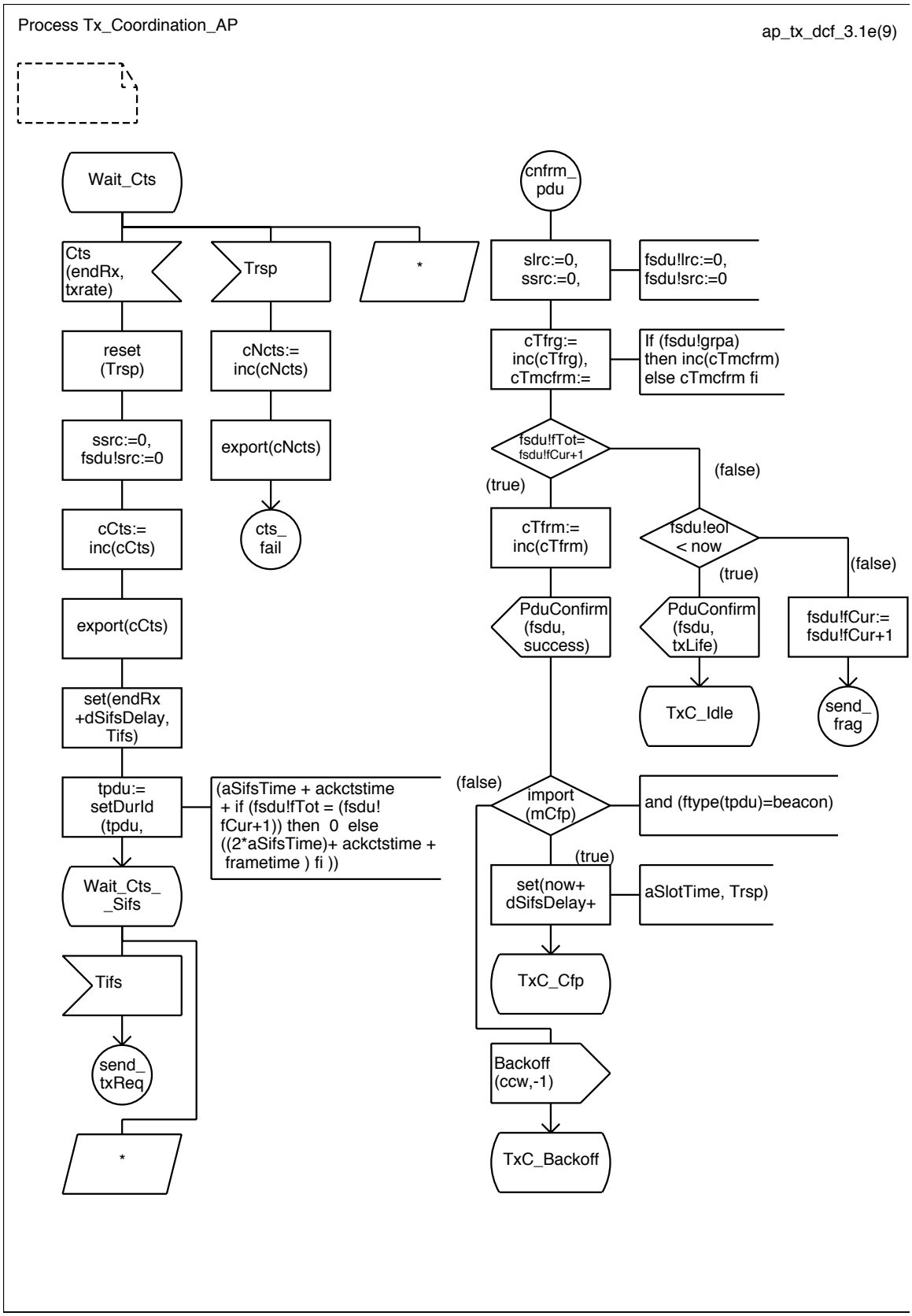

 Copyright © 2000 IEEE. All rights reserved.

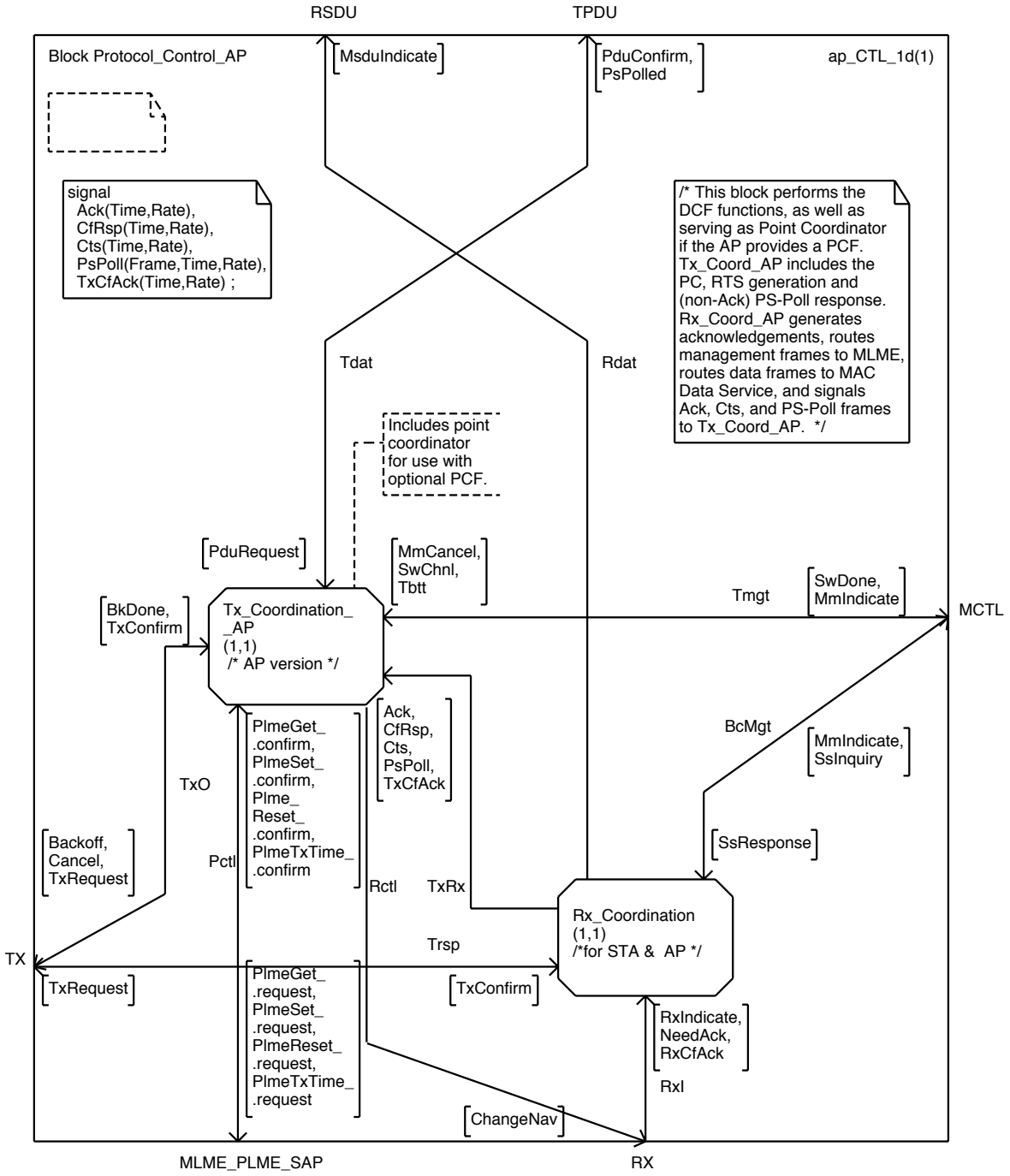

Copyright © 2000 IEEE. All rights reserved.

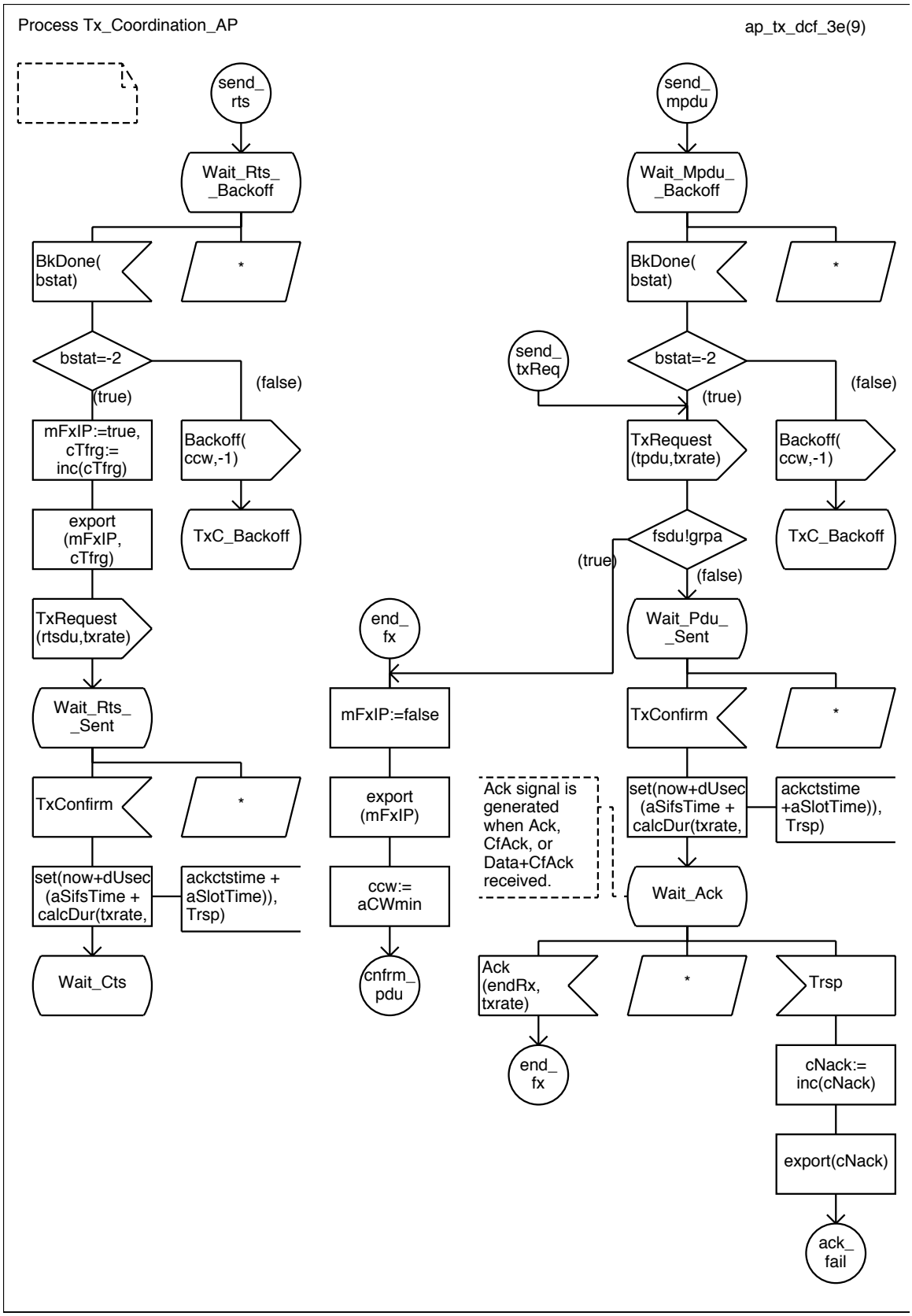

 Copyright © 2000 IEEE. All rights reserved.

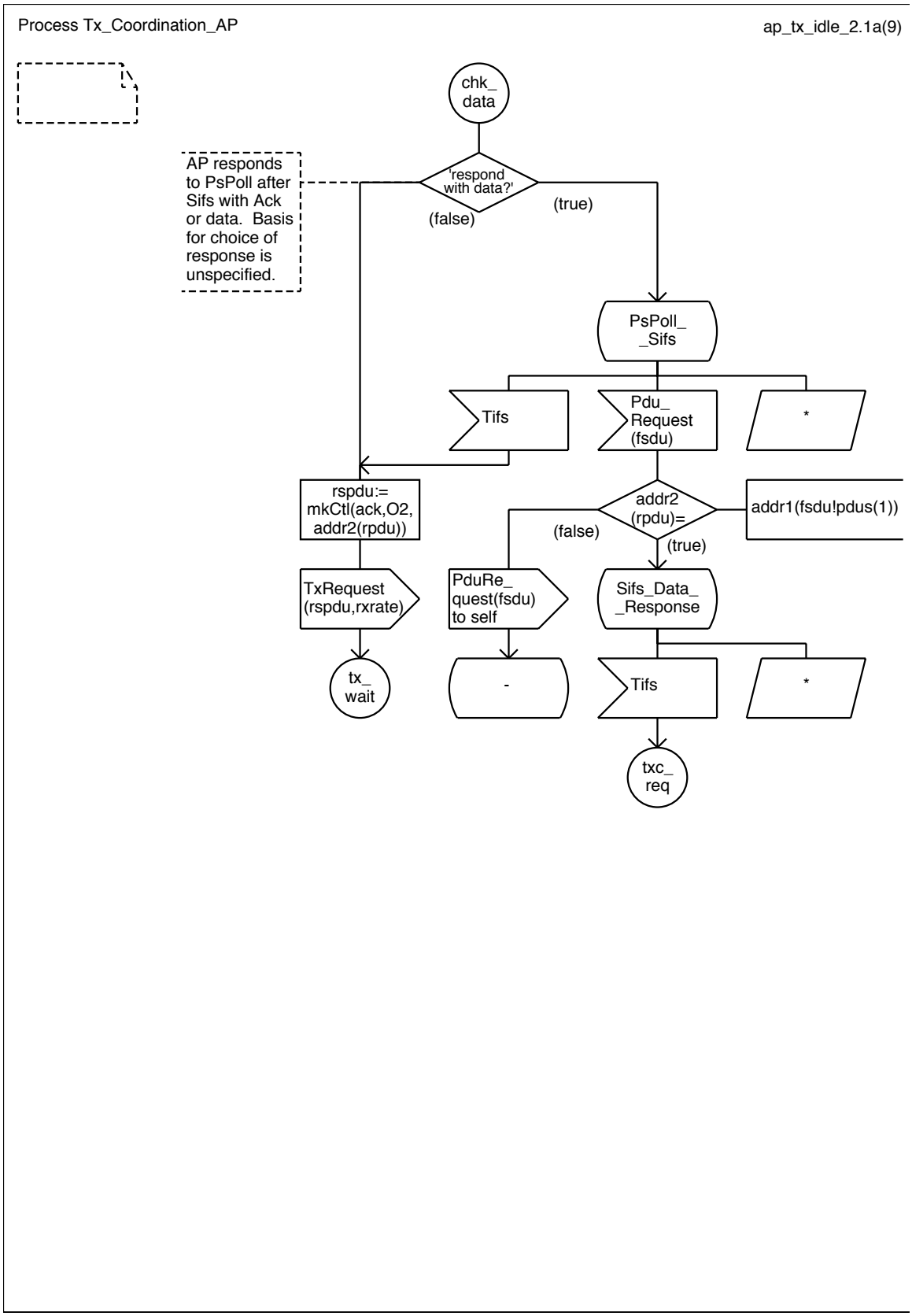

Copyright © 2000 IEEE. All rights reserved.

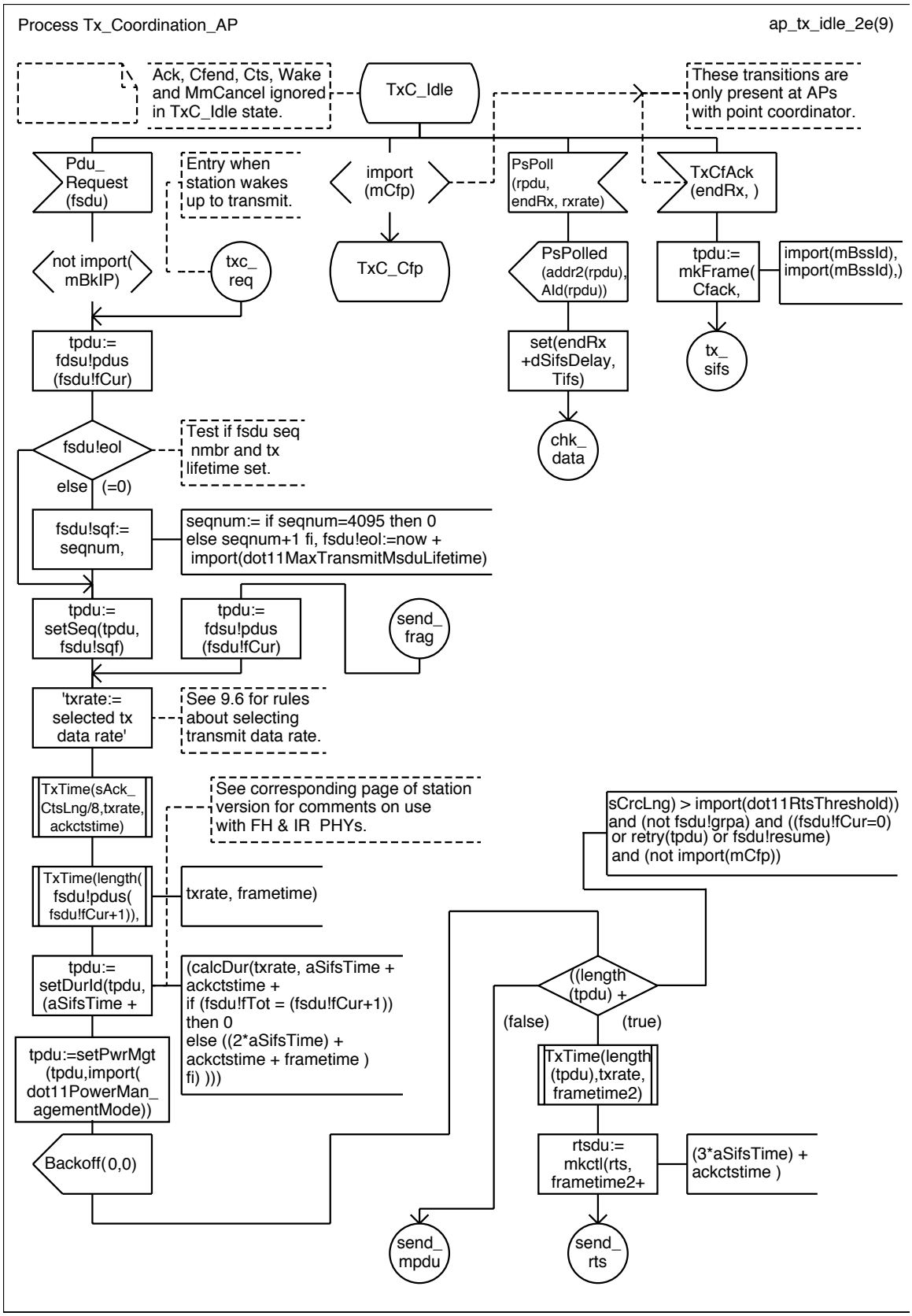

 Copyright © 2000 IEEE. All rights reserved.

Process Tx_Coordination_AP

ap_tx_init_1e(9)

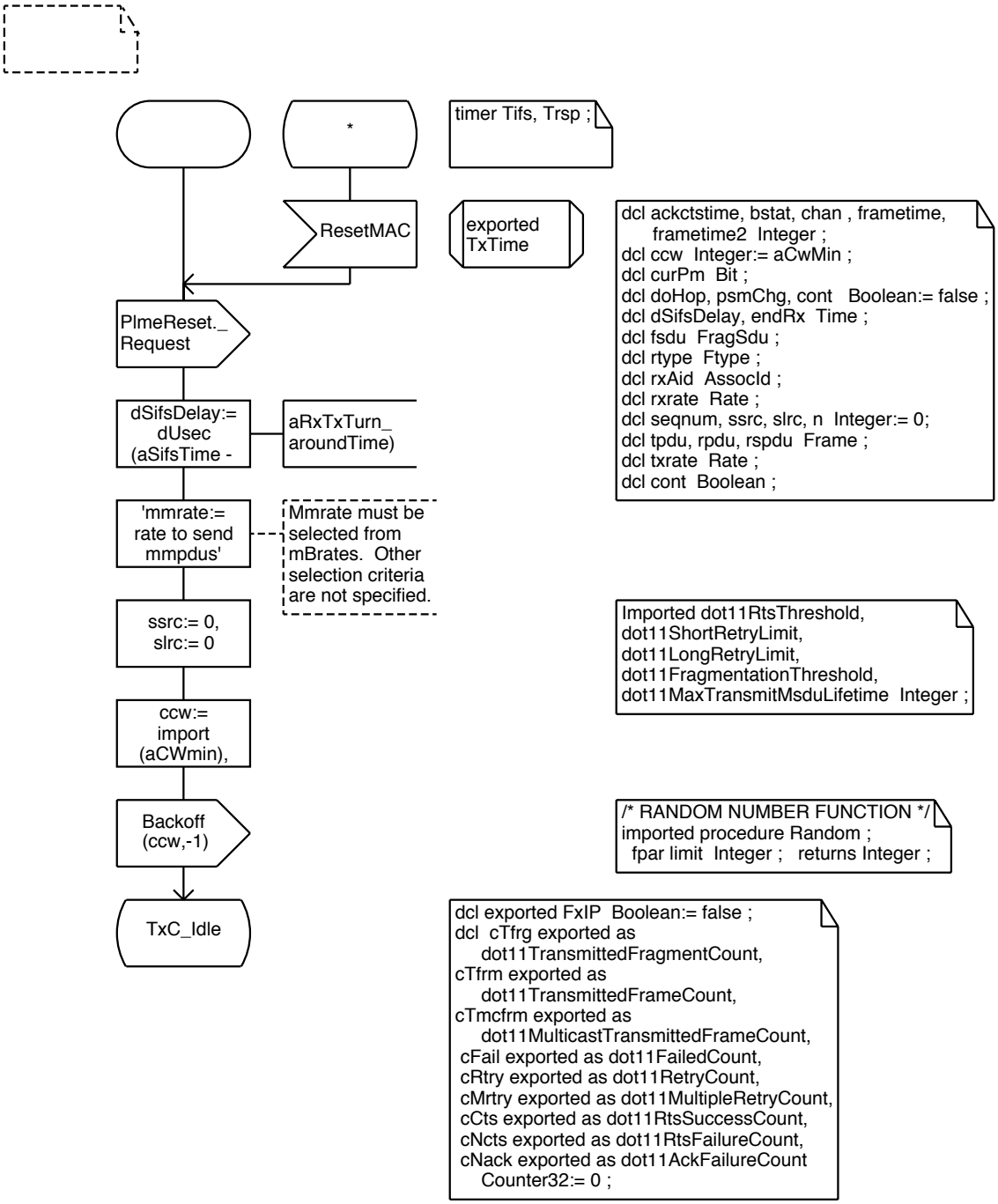

Copyright © 2000 IEEE. All rights reserved.

```
use macsorts ;
use macmib ;
```

System Access_Point AP_signallists_

```
signallist
MlmeRequestSignals=
   MlmeAssociate.request,
   MlmeAuthenticate.request,
   MlmeDeauthenticate.request,
   MlmeDisassociate.request,
   MlmeGet.request,
   MlmeJoin.request,
   MlmePowermgt.request,
   MlmeReassociate.request,
   MlmeReset.request,
   MlmeScan.request,
   MlmeSet.request,
   MlmeStart.request ;
```

```
signallist
MlmeConfirmSignals=
   MlmeAssociate.confirm,
   MlmeAuthenticate.confirm,
   MlmeDeauthenticate.confirm,
   MlmeDisassociate.confirm,
   MlmeGet.confirm,
   MlmeJoin.confirm,
   MlmePowermgt.confirm,
   MlmeReassociate.confirm,
   MlmeReset.confirm,
   MlmeScan.confirm,
   MlmeSet.confirm,
   MlmeStart.confirm ;
```

```
signallist
MlmeIndicationSignals=
   MlmeAuthenticate.indication,
   MlmeDeauthenticate.indication,
   MlmeDisassociate.indication,
   MlmeAssociate.indication,
   MlmeReassociate.indication ;
```

```
signallist
SmtRequestSignals=
   MlmeAssociate.request,
   MlmeAuthenticate.request,
   MlmeDeauthenticate.request,
   MlmeDisassociate.request,
   MlmeJoin.request,
   MlmeReassociate.request,
   MlmeScan.request,
   MlmeStart.request ;
```

```
signallist
SmtConfirmSignals=
   MlmeAssociate.confirm,
   MlmeAuthenticate.confirm,
   MlmeDeauthenticate.confirm,
   MlmeDisassociate.confirm,
   MlmeJoin.confirm,
   MlmeReassociate.confirm,
   MlmeScan.confirm,
   MlmeStart.confirm ;
```

```
signallist
SmtIndicationSignals=
   MlmeAuthenticate.indication,
   MlmeDeauthenticate.indication,
   MlmeDisassociate.indication,
   MlmeAssociate.indication,
   MlmeReassociate.indication ;
```

```
signallist
PhyTxRequestSignals=
   PhyTxStart.request,
   PhyTxEnd.request,
   PhyData.request ;
```

```
signallist
PhyTxConfirmSignals=
   PhyTxStart.confirm,
   PhyTxEnd.confirm,
   PhyData.confirm ;
```

```
signallist
PhyRxSignals=
   PhyRxStart.indication,
   PhyRxEnd.indication,
   PhyData.indication,
   PhyCca.indication,
   PhyCcarst.confirm ;
```

```
signallist
PlmeRequestSignals=
   PlmeCharacteristics.request,
   PlmeGet.request,
   PlmeSet.request,
   PlmeReset.request,
   PlmeTxTime.request ;
```

```
signallist
PlmeConfirmSignals=
   PlmeCharacteristics.confirm,
   PlmeGet.confirm,
   PlmeSet.confirm,
   PlmeReset.confirm,
   PlmeTxTime.confirm ;
```

 Copyright © 2000 IEEE. All rights reserved.

```
use macsorts ;
use macmib ;
```

System Access_Point — AP_signals_2d(3)

```
newtype DsStatus  literals
  assoc, disassoc, reassoc, unknown
endnewtype DsStatus ;
```

```
signal
  AsChange(Frame,DsStatus),
  Backoff(Integer,Integer),
  BkDone(Integer),
  Busy,
  Cancel,
  ChangeNav(Time,Duration,NavSrc),
  DsInquiry(MacAddr,MacAddr),
  DsNotify(MacAddr,DsStatus),
  DsResponse(MacAddr,MacAddr,DsStatus),
  FromDsm(MacAddr,MacAddr,Octetstring),
  Idle,
  MaUnitdata.indication(MacAddr,MacAddr,
    Routing,Octetstring,RxStatus,
    CfPriority,ServiceClass),
  MaUnitdata.request(MacAddr,MacAddr,
    Routing,Octetstring,CfPriority,ServiceClass),
  MaUnitdataStatus.indication(MacAddr,
    MacAddr,TxStatus,CfPriority,ServiceClass),
  MlmeAssociate.confirm(MlmeStatus),
  MlmeAssociate.indication(MacAddr),
  MlmeAssociate.request(MacAddr,Kusec,Capability,Integer),
  MlmeAuthenticate.confirm
    (MacAddr,AuthType,MlmeStatus),
  MlmeAuthenticate.indication(MacAddr,AuthType),
  MlmeAuthenticate.request(MacAddr,AuthType,Kusec),
  MlmeDeauthenticate.confirm(MacAddr,MlmeStatus),
  MlmeDeauthenticate.indication(MacAddr,ReasonCode),
  MlmeDeauthenticate.request(MacAddr,ReasonCode),
  MlmeDisassociate.confirm(MlmeStatus),
  MlmeDisassociate.indication(MacAddr,ReasonCode),
  MlmeDisassociate.request(MacAddr,ReasonCode),
  MlmeGet.confirm(MibStatus,MibAtrib,MibValue),
  MlmeGet.request(MibAtrib),
  MlmeJoin.confirm(MlmeStatus),
  MlmeJoin.request(BssDscr,Integer,Usec,Ratestring),
  MlmePowermgt.confirm(MlmeStatus),
  MlmePowermgt.request(PwrSave,Boolean,Boolean),
  MlmeReassociate.confirm(MlmeStatus),
  MlmeReassociate.indication(MacAddr),
  MlmeReassociate.request(MacAddr,Kusec,Capability,Integer),
  MlmeReset.confirm(MlmeStatus),
  MlmeReset.request,
  MlmeScan.confirm(BssDscrSet,MlmeStatus),
  MlmeScan.request(BssTypeSet,MacAddr,Octetstring,
    ScanType,Usec,Intstring,Kusec,Kusec),
  MlmeSet.confirm(MibStatus,MibAtrib),
  MlmeSet.request(MibAtrib,MibValue),
  MlmeStart.confirm(MlmeStatus),
  MlmeStart.request(Octetstring,BssType,Kusec,
    Integer,CfParms,PhyParms,IbssParms,Usec,
    Capability,Ratestring,Ratestring) ;
```

```
signal
  MmCancel,
  MmConfirm(Frame,TxStatus),
  MmIndicate(Frame,Time,Time,StateErr),
  MmRequest(Frame,Imed,Rate),
  MsduConfirm(Frame,CfPriority,TxStatus),
  MsduIndicate(Frame,CfPriority),
  MsduRequest(Frame,CfPriority),
  NeedAck(MacAddr,Time,Duration,Rate),
  PduConfirm(FragSdu,TxResult),
  PduRequest(FragSdu),
  PhyCca.indication(Ccastatus),
  PhyCcarst.confirm,
  PhyCcarst.request,
  PhyData.confirm,
  PhyData.indication(Octet),
  PhyData.request(Octet),
  PhyRxEnd.indication(PhyRxStat),
  PhyRxStart.indication(Integer,Rate),
  PhyTxEnd.confirm,
  PhyTxEnd.request,
  PhyTxStart.confirm,
  PhyTxStart.request(Integer,Rate),
  PlmeCharacteristics.confirm(PhyChrstcs),
  PlmeCharacteristics.request,
  PlmeGet.confirm(MibStatus,
    MibAtrib,MibValue),
  PlmeGet.request(MibAtrib),
  PlmeReset.confirm(Boolean),
  PlmeReset.request,
  PlmeSet.confirm(MibStatus,MibAtrib),
  PlmeSet.request(MibAtrib,MibValue),
  PlmeTxTime.confirm(Integer),
  PlmeTxTime.request(Integer, Rate),
  PsmDone,
  PsPolled(MacAddr,AsocId),
  PsChange(MacAddr,PsMode),
  PsIndicate(MacAddr,PsMode),
  PsInquiry(MacAddr),
  PsResponse(MacAddr,PsMode),
  ResetMAC,
  RxCfAck(MacAddr),
  RxIndicate(Frame,Time,Time,Rate),
  Slot,
  SsInquiry(MacAddr),
  SsResponse(MacAddr,
    StationState,StationState),
  SwChnl(Integer,Boolean),
  SwDone,
  ToDsm(MacAddr,MacAddr,Octetstring),
  TxConfirm,
  TxRequest(Frame,Rate) ;
```

Copyright © 2000 IEEE. All rights reserved.

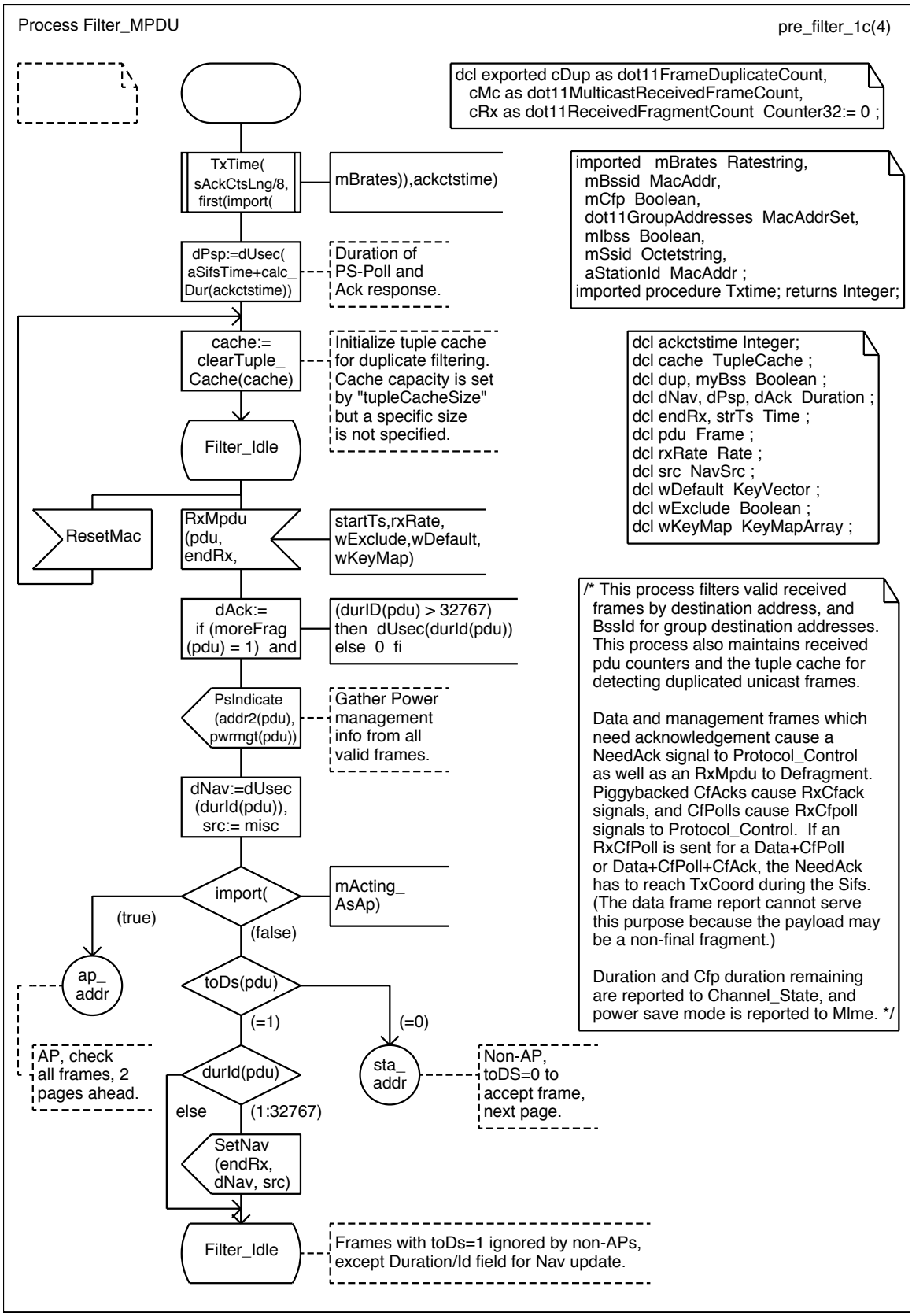

 Copyright © 2000 IEEE. All rights reserved.

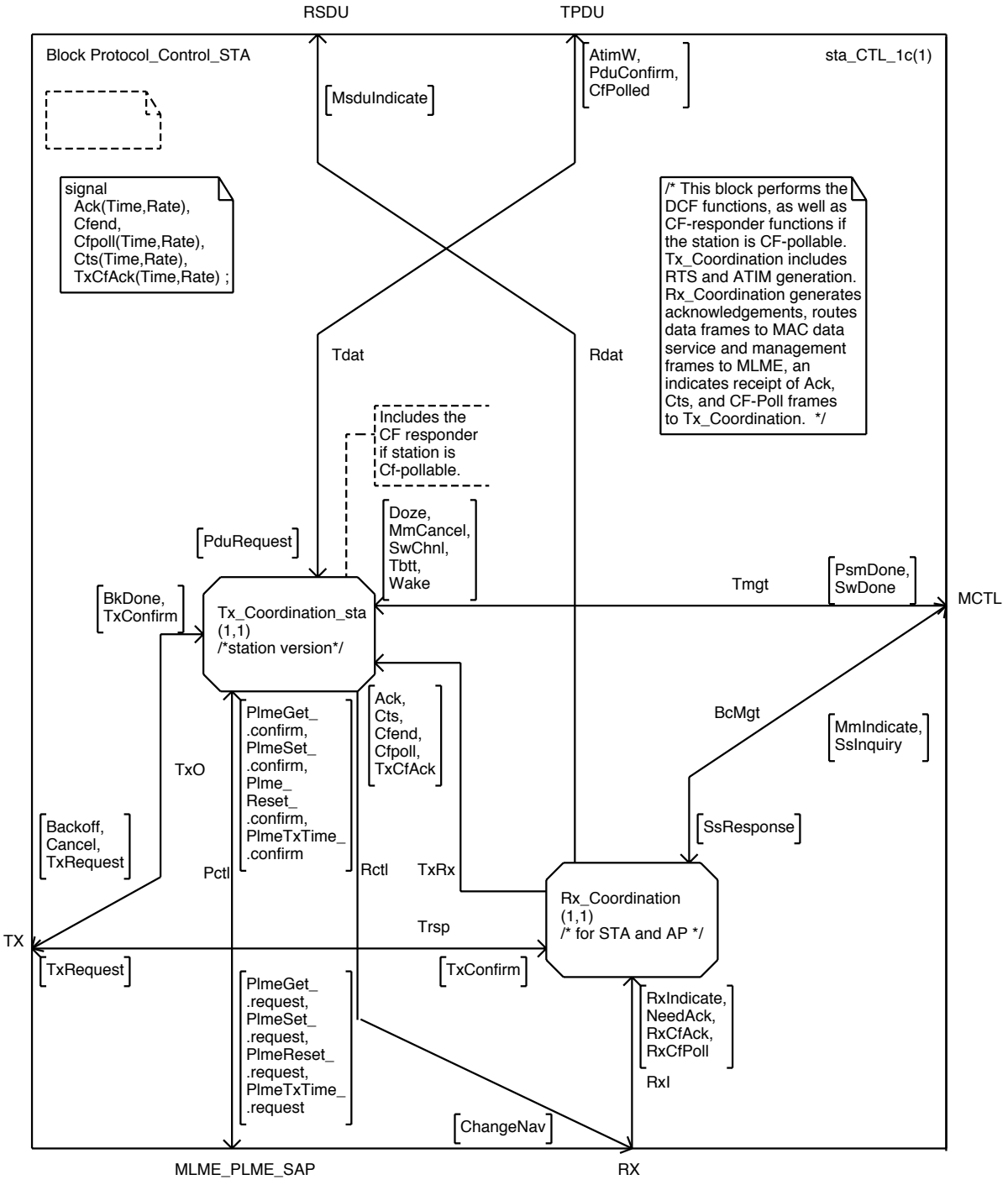

Copyright © 2000 IEEE. All rights reserved.

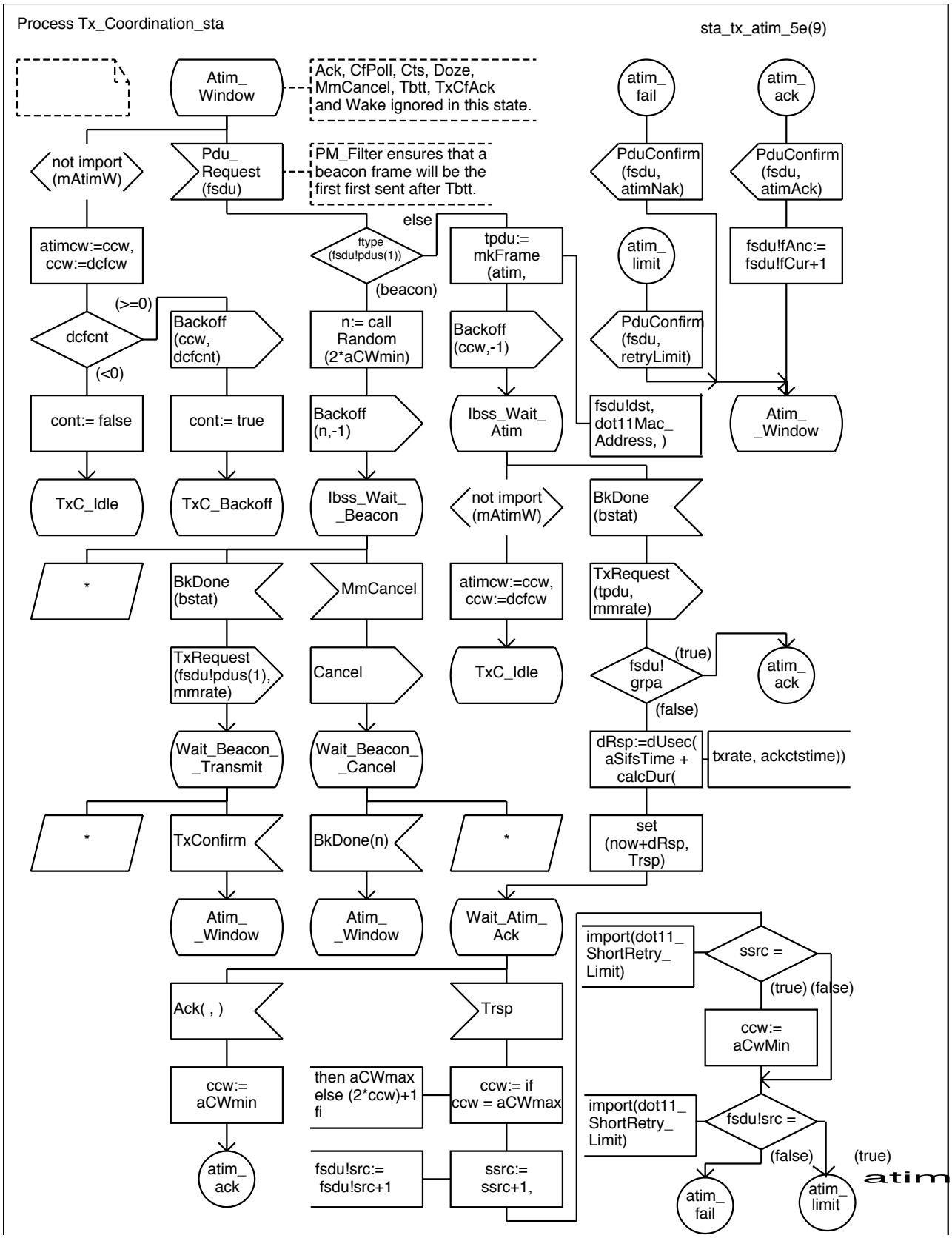

 Copyright © 2000 IEEE. All rights reserved.

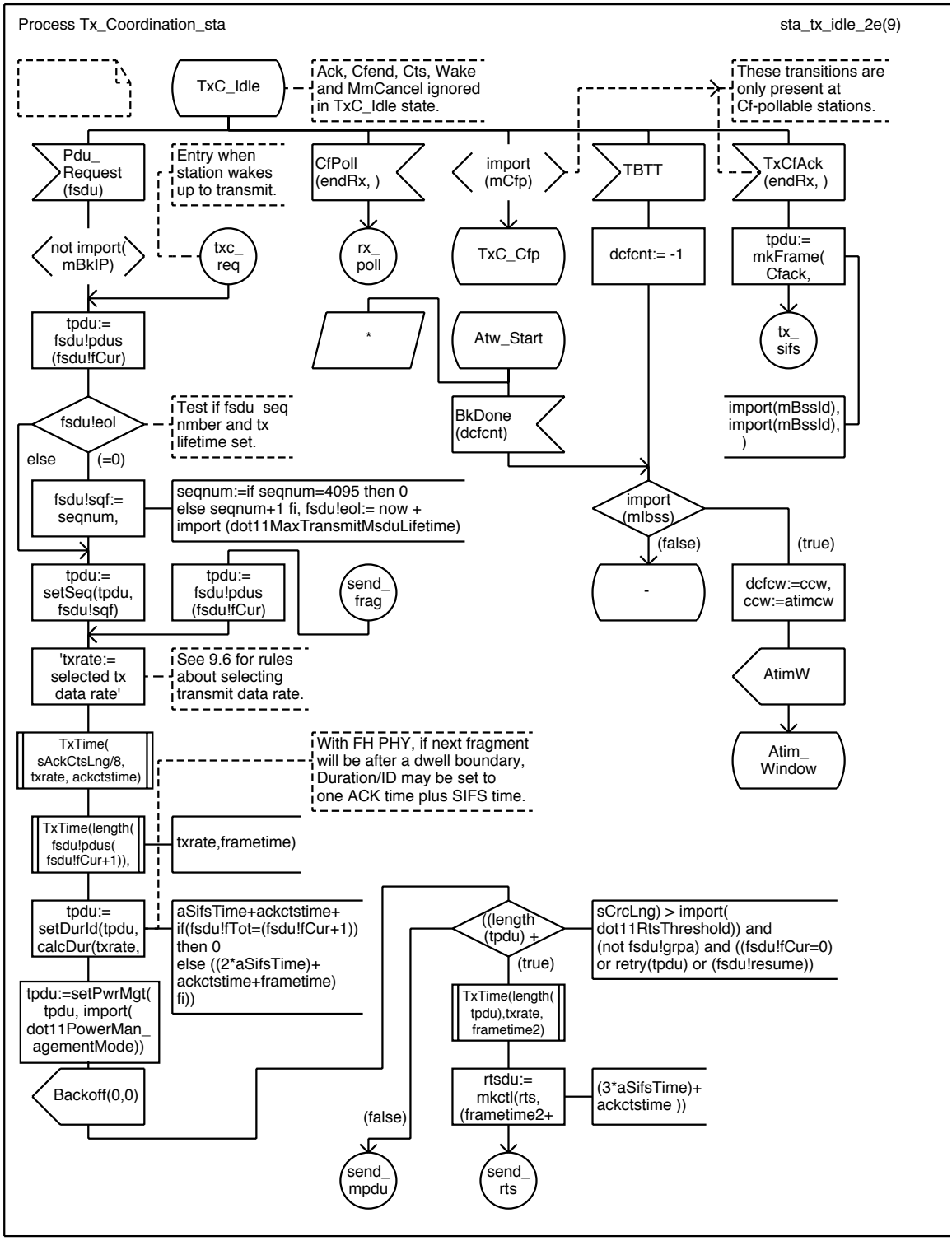

Copyright © 2000 IEEE. All rights reserved.

Process Tx_Coordination_sta sta_tx_init_1e(9)

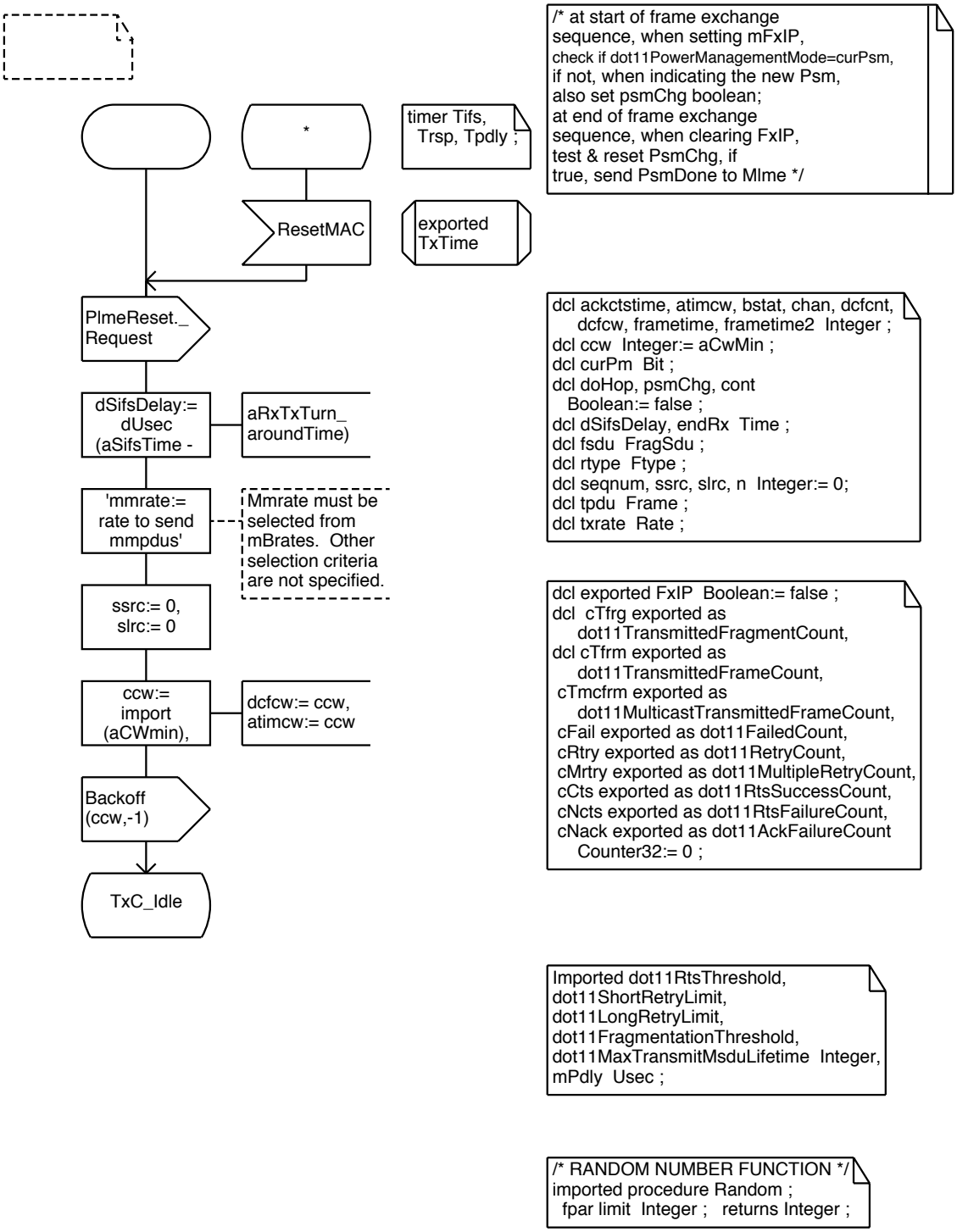

 Copyright © 2000 IEEE. All rights reserved.

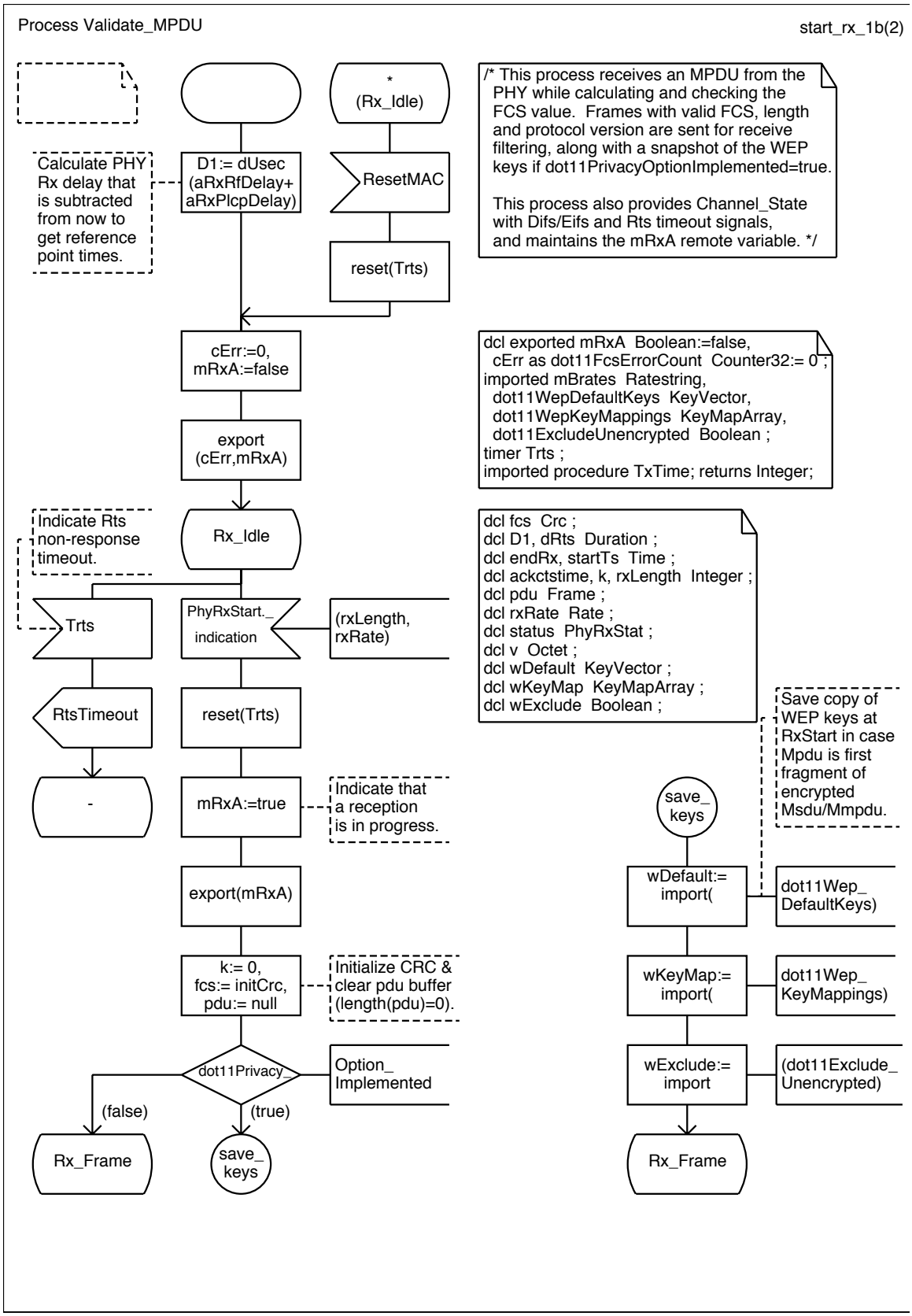

Copyright © 2000 IEEE. All rights reserved.

```
use macsorts ;
use macmib ;
```

System Station Sta_signals_2d(3)

```
signal
  AtimW,
  Backoff(Integer,Integer),
  BkDone(Integer),
  Busy,
  Cancel,
  CfPolled,
  ChangeNav(Time,Duration,NavSrc),
  Doze,
  Idle,
  MaUnitdata.indication(MacAddr,MacAddr,
    Routing,Octetstring,RxStatus,
    CfPriority,ServiceClass),
  MaUnitdata.request(MacAddr,MacAddr,
    Routing,Octetstring,CfPriority,ServiceClass),
  MaUnitdataStatus.indication(MacAddr,
    MacAddr,TxStatus,CfPriority,ServiceClass),
  MlmeAssociate.confirm(MlmeStatus),
  MlmeAssociate.indication(MacAddr),
  MlmeAssociate.request(MacAddr,Kusec,Capability,Integer),
  MlmeAuthenticate.confirm
    (MacAddr,AuthType,MlmeStatus),
  MlmeAuthenticate.indication(MacAddr,AuthType),
  MlmeAuthenticate.request(MacAddr,AuthType,Kusec),
  MlmeDeauthenticate.confirm(MacAddr,MlmeStatus),
  MlmeDeauthenticate.indication(MacAddr,ReasonCode),
  MlmeDeauthenticate.request(MacAddr,ReasonCode),
  MlmeDisassociate.confirm(MlmeStatus),
  MlmeDisassociate.indication(MacAddr,ReasonCode),
  MlmeDisassociate.request(MacAddr,ReasonCode),
  MlmeGet.confirm(MibStatus,MibAtrib,MibValue),
  MlmeGet.request(MibAtrib),
  MlmeJoin.confirm(MlmeStatus),
  MlmeJoin.request(BssDscr,Integer,Usec,Ratestring),
  MlmePowermgt.confirm(MlmeStatus),
  MlmePowermgt.request(PwrSave,Boolean,Boolean),
  MlmeReassociate.confirm(MlmeStatus),
  MlmeReassociate.indication(MacAddr),
  MlmeReassociate.request(MacAddr,Kusec,Capability,Integer),
  MlmeReset.confirm(MlmeStatus),
  MlmeReset.request(MacAddr,Boolean),
  MlmeScan.confirm(BssDscrSet,MlmeStatus),
  MlmeScan.request(BssTypeSet,MacAddr,Octetstring,
    ScanType,Usec,Intstring,Kusec,Kusec),
  MlmeSet.confirm(MibStatus,MibAtrib),
  MlmeSet.request(MibAtrib,MibValue),
  MlmeStart.confirm(MlmeStatus),
  MlmeStart.request(Octetstring,BssType,Kusec,
    Integer,CfParms,PhyParms,IbssParms,Usec,
    Capability,Ratestring,Ratestring) ;
```

```
signal
  MmCancel,
  MmConfirm(Frame,TxStatus),
  MmIndicate(Frame,Time,Time,StateErr),
  MmRequest(Frame,Imed,Rate),
  MsduConfirm(Frame,CfPriority,TxStatus),
  MsduIndicate(Frame,CfPriority),
  MsduRequest(Frame,CfPriority),
  NeedAck(MacAddr,Time,Duration,Rate),
  PduConfirm(FragSdu,TxResult),
  PduRequest(FragSdu),
  PhyCca.indication(Ccastatus),
  PhyCcarst.confirm,
  PhyCcarst.request,
  PhyData.confirm,
  PhyData.indication(Octet),
  PhyData.request(Octet),
  PhyRxEnd.indication(PhyRxStat),
  PhyRxStart.indication(Integer,Rate),
  PhyTxEnd.confirm,
  PhyTxEnd.request,
  PhyTxStart.confirm,
  PhyTxStart.request(Integer,Rate),
  PlmeCharacteristics.confirm(PhyChrstcs),
  PlmeCharacteristics.request,
  PlmeGet.confirm(MibStatus,
    MibAtrib,MibValue),
  PlmeGet.request(MibAtrib),
  PlmeReset.confirm(Boolean),
  PlmeReset.request,
  PlmeSet.confirm(MibStatus,MibAtrib),
  PlmeSet.request(MibAtrib,MibValue),
  PlmeTxTime.confirm(Integer),
  PlmeTxTime.request(Integer, Rate),
  PsmDone,
  PsChange(MacAddr,PsMode),
  PsIndicate(MacAddr,PsMode),
  PsInquiry(MacAddr),
  PsResponse(MacAddr,PsMode),
  ResetMAC,
  RxCfAck(MacAddr),
  RxIndicate(Frame,Time,Time,Rate),
  Slot,
  SsInquiry(MacAddr),
  SsResponse(MacAddr,
    StationState,StationState),
  SwChnl(Integer,Boolean),
  SwDone,
  TBTT,
  TxConfirm,
  TxRequest(Frame,Rate),
  Wake ;
```

 Copyright © 2000 IEEE. All rights reserved.

```
use macsorts ;
use macmib ;
```

System Station — Sta_signallists_3c(3)

```
signallist
MlmeRequestSignals=
   MlmeAssociate.request,
   MlmeAuthenticate.request,
   MlmeDeauthenticate.request,
   MlmeDisassociate.request,
   MlmeGet.request,
   MlmeJoin.request,
   MlmePowermgt.request,
   MlmeReassociate.request,
   MlmeReset.request,
   MlmeScan.request,
   MlmeSet.request,
   MlmeStart.request ;
```

```
signallist
MlmeConfirmSignals=
   MlmeAssociate.confirm,
   MlmeAuthenticate.confirm,
   MlmeDeauthenticate.confirm,
   MlmeDisassociate.confirm,
   MlmeGet.confirm,
   MlmeJoin.confirm,
   MlmePowermgt.confirm,
   MlmeReassociate.confirm,
   MlmeReset.confirm,
   MlmeScan.confirm,
   MlmeSet.confirm,
   MlmeStart.confirm ;
```

```
signallist
MlmeIndicationSignals=
   MlmeAuthenticate.indication,
   MlmeDeauthenticate.indication,
   MlmeDisassociate.indication,
   MlmeAssociate.indication,
   MlmeReassociate.indication ;
```

```
signallist
MmgtRequestSignals=
   MlmeAssociate.request,
   MlmeAuthenticate.request,
   MlmeDeauthenticate.request,
   MlmeDisassociate.request,
   MlmeJoin.request,
   MlmePowermgt.request,
   MlmeReassociate.request,
   MlmeScan.request,
   MlmeStart.request ;
```

```
signallist
MmgtConfirmSignals=
   MlmeAssociate.confirm,
   MlmeAuthenticate.confirm,
   MlmeDeauthenticate.confirm,
   MlmeDisassociate.confirm,
   MlmeJoin.confirm,
   MlmePowermgt.confirm,
   MlmeReassociate.confirm,
   MlmeScan.confirm,
   MlmeStart.confirm ;
```

```
signallist
MmgtIndicationSignals=
   MlmeAuthenticate.indication,
   MlmeDeauthenticate.indication,
   MlmeDisassociate.indication,
   MlmeAssociate.indication,
   MlmeReassociate.indication ;
```

```
signallist
PhyTxRequestSignals=
   PhyTxStart.request,
   PhyTxEnd.request,
   PhyData.request ;
```

```
signallist
PhyTxConfirmSignals=
   PhyTxStart.confirm,
   PhyTxEnd.confirm,
   PhyData.confirm ;
```

```
signallist
PhyRxSignals=
   PhyRxStart.indication,
   PhyRxEnd.indication,
   PhyData.indication,
   PhyCca.indication,
   PhyCcareset.confirm ;
```

```
signallist
PlmeRequestSignals=
   PlmeCharacteristics.request,
   PlmeGet.request,
   PlmeSet.request,
   PlmeReset.request,
   PlmeTxTime.request;
```

```
signallist
PlmeConfirmSignals=
   PlmeCharacteristics.confirm,
   PlmeGet.confirm,
   PlmeReset.confirm,
   PlmeSet.confirm,
   PlmeTxTime.confirm;
```

Copyright © 2000 IEEE. All rights reserved.

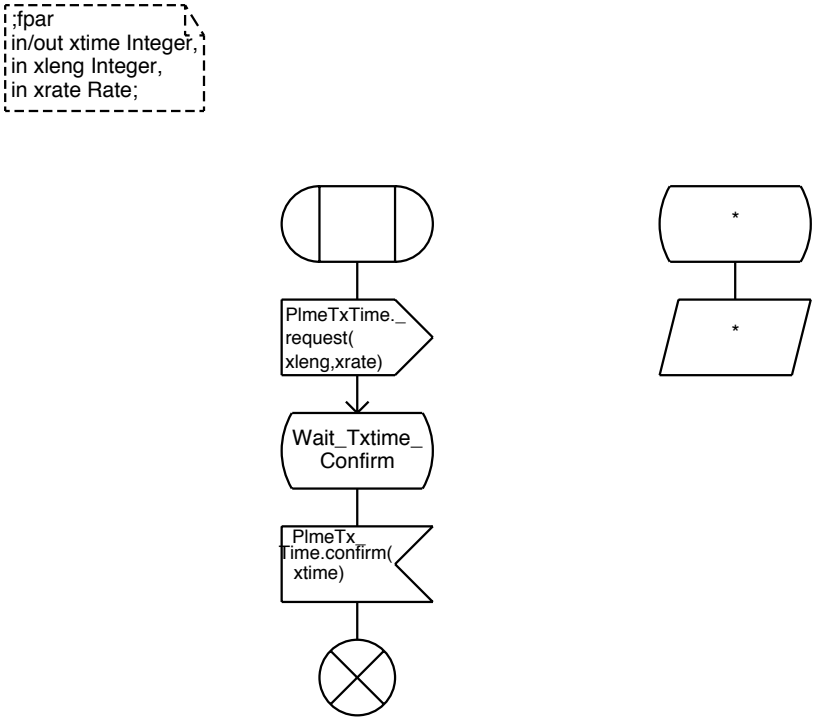

 Copyright © 2000 IEEE. All rights reserved.

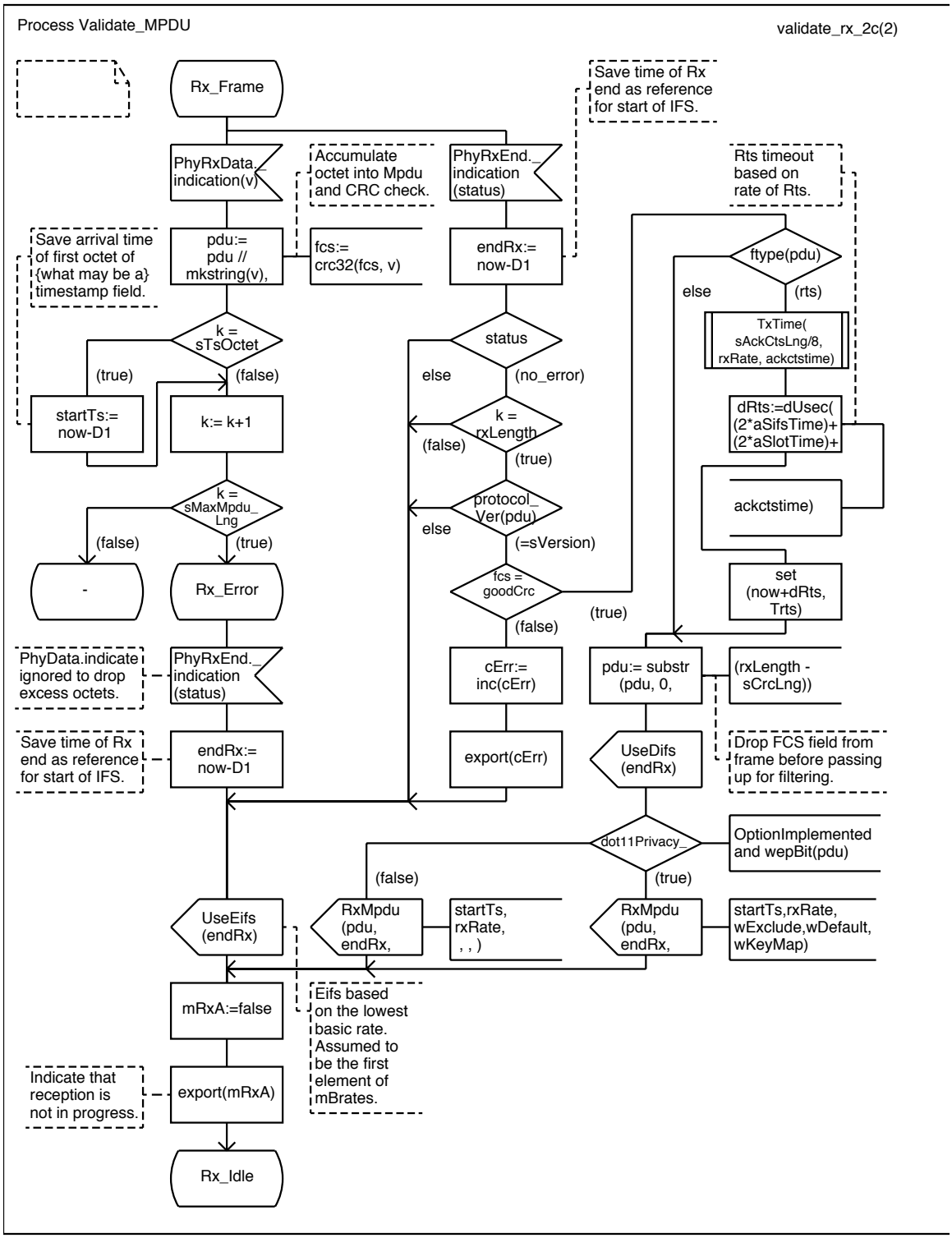

Copyright © 2000 IEEE. All rights reserved.

Annex D

(normative)

ASN.1 encoding of the MAC and PHY MIB

It has come to our attention that the definition of the Management Information Base (MIB) in the approved amendment is inconsistent with the MIB of the base standard. Because the definitions in Annex D are not correct, Annex D is not being published in this edition.

The Working Group has submitted a PAR for a Corrigenda to this amendment to make Annex D consistent with the base standard. This Corrigenda will be made available at no cost to all purchasers of the published amendment. This information will also be posted on our Web site at **standards.ieee.org/reading/index.html.**

 Copyright © 2000 IEEE. All rights reserved.

Annex F

Add this new Annex:

(informative)

High Rate PHY/frequency-hopping interoperability

The Channel Agility option described in 18.4.6.7 provides for IEEE 802.11 FH PHY interoperability with the High Rate PHY. The frequency-hopping patterns, as defined within this annex, enable synchronization with an FH PHY compliant BSS in North America and most of Europe. In addition, CCA requirements on a High Rate station using this mode provide for CCA detection of 1 MHz wide FH signals within the wideband DS channel selected. FH PHY stations operating in mixed mode FH/DS environments are advised to use similar cross PHY CCA mechanisms. The frequency-hopping (Channel Agility) and cross CCA mechanisms provide the basic mechanisms to enable coexistence and interoperability.

The MAC elements include both DS and FH elements in beacons and probe responses when the Channel Agility option is turned on. Added capability fields indicate the ability to support the Channel Agility option and to indicate whether the option is turned on. These fields allow synchronization to the hopping sequence and timing, identification of what modes are being used within a BSS when joining on either High Rate or FHSS sides, and rejection of an association request in some cases.

Interoperability within an infrastructure BSS can be achieved, as an example, using a virtual dual access point (AP). A virtual dual AP is defined, for purposes of discussion, as two logically separate APs that exist within a single physical AP with a single radio (one transmit and one receive path). Both FHSS and High Rate logical APs send out their own beacons, DTIMs, and other nondirected packets. The two sides interact in the sharing of the medium and the AP's processor and radio. Addressing and association issues may be handled in one of several ways and are left as an implementation choice.

Minimal interoperability with a non-hopping High Rate or legacy DSSS is provided by the use of a channel at least 1/7 or more of the time. While throughput would be significantly reduced by having a channel only 1/7 of the time, connection and minimal throughput can be provided.

F.1 Additional CCA recommendations

When the frequency-hopping option is utilized, the HR/DSSS PHY should provide the CCA capability to detect 1 MHz wide FH PHY signals operating within the wideband DS channel at levels 10 dB higher than that specified in 18.4.8.4 for wideband HR/DSSS signals. This is in addition to the primary CCA requirements in 18.4.8.4. A timeout mechanism to avoid excessive deferral to constant CW or other non-IEEE 802.11 type signals is allowed.

FH PHY stations operating in mixed environments should provide similar CCA mechanisms to detect wideband DSSS signals at levels specified in 18.4.8.4, but measured within a 1 MHz bandwidth. Signal levels measured in a full DSSS channel will be generally 10 dB or higher.

Copyright © 2000 IEEE. All rights reserved.