IN THE UNITED STATES PATENT AND TRADEMARK OFFICE

In re Patent of:	Geonjung Ko, et al.	Attorney Docket No. 39843-0197IP1
U.S. Patent No.:	11,700,597	
Issue Date:	July 11, 2023	
Appl. Serial No.:	17/227,289	
Filing Date:	April 10, 2021	
Title:	WIRELESS COMMUNICATION METHOD AND WIRELESS COMMUNICATION TERMINAL IN BASIC SERVICE SET OVERLAPPING WITH ANOTHER BASIC SERVICE SET	

DECLARATION OF EXPERT

I declare that all statements made herein on my own knowledge are true and that all statements made on information and belief are believed to be true, and further, that these statements were made with the knowledge that willful false statements and the like so made are punishable under Section 1001 of Title 18 of the United States Code.

Date: 4/30/25

By: Mark P. Mahon
Dr. Mark P. Mahon

SAMSUNG 1003

Table of Contents

I. ASSIGNMENT 4
II. QUALIFICATIONS AND BACKGROUND INFORMATION 4
III. OVERVIEW OF CONCLUSIONS FORMED 15
IV. LEVEL OF ORDINARY SKILL IN THE ART 16
V. LEGAL STANDARDS 17
A. Terminology 17
B. Legal Standards 18
C. Anticipation 18
D. Obviousness 19
VI. MATERIALS CONSIDERED 23
VII. TECHNOLOGY OVERVIEW 24
A. 802.11 Technical Background 24
VIII. THE ’597 PATENT 33
A. Overview of the ’597 Patent 33
B. Prosecution History of the ’597 Patent 33
IX. OVERVIEW AND COMBINATIONS OF PRIOR ART REFERENCES 33
A. Lee 33
B. Stacey 37
C. Zhou 38
D. Choudhury 39
X. Ground 1A: Lee renders claims 1, 7, 9, and 15 obvious 40
A. Analysis 40
XI. Ground 1B: Lee-Stacey renders claims 2-3, 6, 10-11, and 14 obvious 49
A. Lee-Stacey combination 49
B. Analysis 53
XII. Ground 1C: Lee-Zhou renders claims 4-5 and 12-13 obvious 62
A. Lee-Zhou combination 62
B. Analysis 66
XIII. Ground 1D: Lee-Choudhury renders claims 7-8 and 15-16 obvious 68
A. Lee-Choudhury combination 68
B. Analysis 71
XIV. Ground 2A: Choudhury renders claims 1, 7, 8, 9, 15, and 16 obvious 73
A. Analysis 73

XV. Ground 2B: Choudhury-Stacey renders claims 2-3, 6, 10-11, and 14 obvious 95
A. Choudhury-Stacey combination 95
B. Analysis.....99

XVI. Ground 2C: Choudhury-Zhou renders claims 4-5, 12, and 13 obvious 104
A. Choudhury-Zhou combination.....104
B. Analysis.....107

XVII. CONCLUSION.....109

I. ASSIGNMENT

1. I have been retained on behalf of Samsung Electronics Co., Ltd. ("Samsung") to offer technical opinions related to 11,700,597 ("the '597 patent") (SAMSUNG-1001). I understand that Samsung is requesting that the Patent Trial and Appeal Board ("PTAB" or "Board") to institute an *inter partes* review ("IPR") proceeding of the '597 patent.

2. I have been asked to provide my independent analysis of the '597 patent based on the prior art publications cited in this declaration.

3. I am not and never have been, an employee of Samsung. I received no compensation for this declaration beyond my normal hourly compensation based on my time actually spent analyzing the '597 patent, the prior art publications cited below, and issues related thereto, and I will not receive any added compensation based on the outcome of any IPR or other proceeding involving the '597 patent.

II. QUALIFICATIONS AND BACKGROUND INFORMATION

4. I am over the age of 18 and am competent to write this declaration. I have personal knowledge, or have developed knowledge of these technologies based upon education, training, or experience, of the matters set forth herein.

5. My qualifications are summarized here and explained in more detail in my curriculum vitae, which is attached as Appendix A to this report. Appendix A also includes a list of my publications and the cases in which I have testified at

deposition, hearing, or trial within the past four years.

6. I am a Teaching Professor in the School of Electrical Engineering and Computer Science at Pennsylvania State University, University Park, PA ("Penn State" or "PSU"). I have worked on telecommunications and wireless networks, including Z-Wave, Bluetooth, Zigbee, Wi-Fi, NFC, AMPS, IS-95, CDMA2000, GSM, EDGE, UMTS/WCDMA, LTE, and 5G cellular systems since 1988.

7. I received my B.S. in Electronics Engineering from the University of Scranton in 1987. I received my M.S. in Electrical Engineering and Ph.D. in Acoustics from Penn State in 1991 and 2001, respectively.

8. In 1988, after I received my bachelor's degree, I joined the Central Intelligence Agency (CIA) while pursuing my M.S. degree at Penn State part-time. My first job at the CIA involved designing and testing systems to automatically capture and characterize telecommunication signals and emissions from various wireless and computer networking devices.

9. I returned to Penn State in early 1990 to pursue graduate research full-time and complete my M.S. degree. My graduate research work focused on wideband beamforming and adaptive signal processing. After completing my M.S. degree in EE in 1991, I accepted a full-time faculty research position at the Applied Research Lab at PSU, primarily working on classified programs, and began working on diverse radio frequency and acoustic sensor systems including

wireless communications and small wireless networks for acoustic tracking, source localization, and feature extraction.

10. I began pursuing my Ph.D. part-time in 1993 while continuing my faculty research position. In 1997, as part of my faculty research position, I began working on classified programs focused on mathematical analytical modeling of cellular communication networks and the development of hardware and software systems to test against cellular networks. My role was to develop the algorithms and write the code running on a specially developed embedded system. For this work, I received a letter of recognition as the "genius behind the VELA software algorithms" from the Director of National Reconnaissance Office (NRO) Systems Engineering and Technology Office. As part of this same work, I was extensively involved in protocol and signaling analysis as well as researching model-specific performance and unique functional characteristics associated with individual mobile devices. The work involved testing dozens of handsets from many manufacturers in controlled and real-world environments against network simulators and live operational networks for each research project.

11. In 2000, my research extended into utilizing non-orthogonal wavelets for improving detection and localization of cellular handsets from high altitude sensor systems. In 2001, I completed my Ph.D. and my research focused on the utilization of advanced communication signals for wideband characterization and

remote sensing of propagation channels.

12. Beginning in 1997, my cellular communications research work focused on CDMA, GSM, EDGE, UMTS, LTE, and 5G cellular systems primarily under grants sponsored principally by the Department of Defense. This classified research work required 3GPP protocol analysis and development of real-time embedded hardware and software systems capable of interacting with cellular networks and cellular handsets. A large portion of my work was directed at architectures, protocols, software, and signaling.

13. I have been working on classified projects since 1988. Before 1998, because the work was not deemed highly classified, I was able to publish eight journal and conference papers prior to 2000. Between 1999 and 2015, however, I was allowed to publish only one article in an unclassified symposium and published and presented about a dozen articles in classified settings. This is because during this period, the vast majority of my research was highly classified. As a result, nearly all of my research results were summarized in classified reports and not available to the general public. Further, because the U.S. government owns any intellectual property resulting from the sponsored research work, I did not pursue or file patent applications.

14. Beginning in 2003, I was co-principal investigator and technical lead on a 3 year multi-million-dollar research effort for developing the Global

Information Grid (GIG). This project was sponsored by the Secretary of Defense's Office with a goal of developing a real-time, multi-intelligence (multi-Int) network for collecting, processing, storing, disseminating, and managing information on demand for decision makers including the warfighter, combatant command centers, policy makers, and support personnel and was the largest network-centric warfare project in development at the time. My research team (Ubiquitous Automated Information Manager) focused on building and deploying a scalable application to perform real-time, multi-int data fusion to support every user in the system. This software application was deployed in Combat Operation Centers, Joint Interagency Task Force locations, and on various platforms (mobile and small computing environments) used by various warfighters. The fused data sources included various content management systems, supply chain logistic reports, GPS-based reports, new feeds, backend databases, sensor system reports, and various other broad data sources.

15. Beginning in 1994, I worked on various projects that involved the implementation and design of user interfaces to support the use of the research, design, analysis tools and signal processing systems for the end user. The user platforms included a broad array of footprints including, small handheld devices with screens or visual displays and those limited to audio-only inputs, medium sized laptops and small desktop systems, and also large, heavy devices, such as

servers and clusters in operational environments (including combat operations centers and 3D immersive environments).

16. Specifically, for the GIG research effort, I led a team of software engineers to deploy our inferencing tool for a disparate range of end users, from dismounted combat soldiers with only a microphone as an interface to soldiers in mules with smart devices (tablets and laptops with multiple visual display interaction capabilities) to field command centers (medium sized clients with significant video displays and processing power with touch and stylus interfaces to the) to combat operation centers with high-powered processing and complex user-interface capabilities/modalities.

17. In 2015, I transferred to the School of Electrical Engineering and Computer Science at Penn State as a teaching faculty member. In that role, I have continued teaching graduate and undergraduate courses, guiding Ph.D. and M.S. students in communication and mobile networking (including LTE and 5G cellular networks), and pursuing research in this and related areas. Since 2015, I have been an author on nine refereed papers as listed in my curriculum vitae (CV).

18. Because of my decades of research and my continuing work at Penn State, I have intimate knowledge of telecommunication networks, including the technology involved in the patents in this case. I have been highly recognized as an expert in such systems within the research community. I was recognized twice by

the National Reconnaissance Office with commendation letters for work dealing with detecting cellular signals in low signal to noise ratio environments. The U.S. government awarded me over $12M in grants between 2003 and 2015 for projects focused on mobile communication devices and networks, in which I served as a Principal Investigator (PI), Co- PI, and/or technical lead.

19. Additionally, during my research career, I interacted extensively with computer scientists and engineers responsible for the design, development, and testing of telephony and data networking systems and testbeds. As a research faculty member, I oversaw engineers and computer scientists that executed many joint projects with development organizations. These interactions exposed me to a wide range of computer scientists and engineers working on telecommunication network technologies. Since 2011, I have been teaching undergraduate and graduate classes in communication and mobile networking and am familiar with the curricula being taught to electrical engineers and computer scientists. The interactions with a wide range of computer scientists and engineers working on telecommunication network technologies and the familiarity with the classes taught to electrical engineers and computer scientists have allowed me to have a good understanding of the level of skills possessed by a person of ordinary skill in the field of cellular technology.

20. I have extensive experience with mobile networks in general and LTE

and 5G specifically. While most of my research efforts between 1998 and 2015 were highly classified, I can state that they included detailed investigation of network architectures, signaling, and functional behavior. A typical research effort would involve studying 3GPP, 3GPP2, IEEE, and other protocol standards to fully comprehend all aspects of L1, L2, and L3 requirements including timing, bit-level construction of the control and user plane messages, and timing characteristics for a given standard as well as functional behavior of network components and user equipment.

21. From 2006 through 2015, my research focused specifically on LTE. My research continues to this day, although I am no longer operating in a classified environment. During this time, I investigated the performance and functional differences of many varied network and handset devices to see how differing signaling and hardware configurations (including MIMO) and environmental factors influenced the behavior of user equipment in a given network environment. This included how diversity techniques (transmit and receive), synchronization, timing, and signal to interference plus noise ratio (SINR) for a given device would affect specific functional aspects including elements of the receiver structure, decoding and demodulation performance, calculation of parameters used by the device for making decisions and deriving parameters reported to the network.

22. As part of my research work, I built several custom CDMA, GSM,

UMTS, and LTE platforms that implemented specific network-side and user equipment-side functionality including custom signal generation and processing structures, particularly the signal processing chains on both the transmit and receive sides. This equipment was developed using network simulation hardware in a laboratory environment and was later tested with corresponding networks in both controlled and fully operational environments. Implementing the transmit and receive chains for custom built protocol-enabled equipment required me to gain an intimate understanding of the relevant 3GPP protocol specifications and the underlying structures. Since 2015, I have been primarily focused on guiding graduate students pursuing research including using code domain non-orthogonal multiple access (NOMA) combined with MIMO sparse coding multiple access to minimize latency and maximize user density in grant free Internet of Things (IoT) environments. Additionally, I am guiding my graduate students in pursuing research in optimized distributed processing algorithms, implementation of block chain coding techniques to improve handover security, and edge computing resource allocation in 4G (LTE)/5G (NR) networks.

23. Much of the classified research work I performed also led to similar approaches for other wireless protocols including IEEE 802.11 and 802.15 (e.g., Zigbee, Bluetooth, and UWB), HART, and other short-range standards as well as HF radio and Wi-MAX.

24. My curriculum vitae, included as an appendix to this declaration, includes a list of publications on which I am a named author. It contains further details regarding my experience, education, publications, and other qualifications to render an expert opinion in connection with this proceeding.

25. In writing this Declaration, I have considered the following: my own knowledge and experience, including my work experience in the fields of wireless communication networks, research and development of wireless signaling, protocols, transmission, and detection techniques, design and construction of wireless test equipment, prototypes, engineering models, and related areas; my experience in teaching those subjects; and my experience in working with others involved in those fields. In addition, I have analyzed the following publications and materials, in addition to other materials I cite in my declaration:

26. I have reviewed the ’597 patent (SAMSUNG-1001), and relevant excerpts of the prosecution history (SAMSUNG-1002) of the ’597 patent.

27. Among various textbooks, documents, and publications, I have also reviewed the following prior art references:

- U.S. Pat. No. 11,700,597 to Ko, et al. (“the ’597 Patent”) (“SAMSUNG-1001”)
- Excerpts from the Prosecution History of the ’597 Patent (“the Prosecution History”) (“SAMSUNG-1002”)
- U.S. Pat. App. Pub. No. 2017/0223731 (“Lee”) (“SAMSUNG-1005”)

- Robert Stacey et al., Proposed TGax Draft Specification, IEEE 802.11-16/0024r1 (Mar. 2, 2016), available at https://mentor.ieee.org/802.11/dcn/16/11-16-0024-01-00ax-proposed-draft-specification.docx ("Stacey") ("SAMSUNG-1006")
- U.S. Pat. App. Pub. No. 2016/0345258 ("Zhou") ("SAMSUNG-1007")
- U.S. Provisional App. No. 62/165,782 ("Zhou Provisional") ("SAMSUNG-1008")
- European Pat. App. Pub. No. 2930997 ("Choudhury") ("SAMSUNG-1009")
- Int'l Pub. No. WO 2015/120488 ("Liu") ("SAMSUNG-1010")
- U.S. Pat. App. Pub. No. 2015/0312386 ("Lee 386") ("SAMSUNG-1011")
- U.S. Pat. No. 9,172,447 ("Park") ("SAMSUNG-1012")
- U.S. Pat. No. 7,848,330 ("Nishibayashi") ("SAMSUNG-1013")
- U.S. Pat. No. 7,769,043 ("Cimini") ("SAMSUNG-1014")
- European Pat. No. 3139690 ("Kim") ("SAMSUNG-1015")
- Int'l Pub. No. WO 2015/198157 ("Seok") ("SAMSUNG-1016")
- Int'l Pub. No. WO 2011/159831 ("Wentink") ("SAMSUNG-1017")
- Int'l Pub. No. WO 2014/179713 ("Oteri") ("SAMSUNG-1018")
- Kurose and Ross, Computer Networking: A Top-Down Approach, 8th Ed, 2021 ("Kurose") ("SAMSUNG-1019")
- IEEE 802.11-2016 ("SAMSUNG-1020")

28. Counsel (Fish & Richardson) has informed me that I should consider these materials through the lens of one of ordinary skill in the art related to the

’597 patent at the time of the earliest possible priority date of the ’597 patent, and I have done so during my review of these materials. I have been informed by Counsel to use the date of March 4, 2016 as the Priority Date.

29. I have no financial interest in the outcome of this proceeding. I am being compensated for my work as an expert on an hourly basis. My compensation is not dependent on the outcome of these proceedings or the content of my opinions.

30. My opinions, as explained below, are based on my education, experience, and expertise in the fields relating to the ’597 Patent. Unless otherwise stated, my testimony below refers to the knowledge of one of ordinary skill in the art as of the earliest possible priority date. Any figures that appear within this document have been prepared with the assistance of Counsel and reflect my understanding of the ’597 Patent and the prior art discussed below.

III. OVERVIEW OF CONCLUSIONS FORMED

31. This declaration explains the conclusions that I have formed based on my analysis of all of the considered materials and my personal experience. To summarize those conclusions, based upon my knowledge and experience and my review of the prior art references listed above, I believe that:

- Ground 1A: Lee renders claims 1, 7, 9, and 15 obvious

- Ground 1B: Lee-Stacey renders claims 2-3, 6, 10-11, and 14 obvious
- Ground 1C: Lee-Zhou renders claims 4-5 and 12-13 obvious
- Ground 1D: Lee-Choudhury renders claims 7-8 and 15-16 obvious
- Ground 2A: Choudhury renders claims 1, 7-9, and 15-16 obvious
- Ground 2B: Choudhury-Stacey renders claims 2-3, 6, 10-11, and 14 obvious
- Ground 2C: Choudhury-Zhou renders claims 4-5 and 12-13 obvious

32. In support of these conclusions, I provide an overview of the references in Section IX and more detailed comments regarding the obviousness of claims 1-16 ("the Challenged Claims") of the '597 patent in Section X.

IV. LEVEL OF ORDINARY SKILL IN THE ART

33. In my opinion, a person of ordinary skill in the art ("POSITA") would have had a Bachelor's degree in electrical engineering, computer engineering, computer science, or a related field, and at least 3 years of experience in the research, design or development of wireless communication devices, systems, and/or networks, or the equivalent. Increased educational experience can make up

for less work experience, and vice versa.

34. Further, all positions in this declaration are from the vantage point of a POSITA as of March 4, 2016.

35. Based on my experiences, I have a good understanding of the capabilities of a POSITA. Indeed, I have taught, participated in organizations, and worked closely with many such persons over the course of my career. Based on my knowledge, skill, and experience, I have an understanding of the capabilities of a POSITA. For example, from my industry experience, I am familiar with what a POSITA would have known and found predictable in the art. From teaching and supervising my post-graduate students, I also have an understanding of the knowledge that a person with this academic experience possesses. Furthermore, I possess those capabilities myself.

V. LEGAL STANDARDS

A. Terminology

36. I have been informed by Counsel and understand that the best indicator of claim meaning is its usage in the context of the patent specification as understood by one of ordinary skill. I further understand that the words of the claims should be given their plain meaning unless that meaning is inconsistent with the patent specification or the patent's history of examination before the Patent Office. Counsel has also informed me, and I understand that, the words of the

claims should be interpreted as they would have been interpreted by one of ordinary skill at the time of the invention was made (not today). The '597 patent was filed September 4, 2018, and claims priority to KR 10-2016-0026684 filed March 4, 2016, which I refer to as the "Critical Date" in this proceeding. Because I do not know at what date the invention as claimed was made, if ever, I have used the Critical Date of the '597 patent as the point in time for claim interpretation purposes. My opinion does not change if the invention date is earlier.

B. Legal Standards

37. I have been informed by Counsel and understand that documents and materials that qualify as prior art can render a patent claim unpatentable as being anticipated or obvious.

38. I am informed by Counsel and understand that all prior art references are to be looked at from the viewpoint of a person of ordinary skill in the art at the time of the invention, and that this viewpoint prevents one from using his or her own insight or hindsight in deciding whether a claim is anticipated or rendered obvious.

C. Anticipation

39. I understand that patents or printed publications that qualify as prior art can be used to invalidate a patent claim as anticipated or as obvious.

40. I understand that, once the claims of a patent have been properly

construed, the second step in determining anticipation of a patent claim requires a comparison of the properly construed claim language to the prior art on a limitation-by-limitation basis.

41. I understand that a prior art reference "anticipates" an asserted claim, and thus renders the claim invalid, if all limitations of the claim are disclosed in that prior art reference, either explicitly or inherently (i.e., necessarily present).

D. Obviousness

42. I understand that even if a patent is not anticipated, it is still invalid if the differences between the claimed subject matter and the prior art are such that the subject matter as a whole would have been obvious at the time the invention was made to a POSITA.

43. I have been informed by Counsel and understand that a claim is unpatentable for obviousness and that obviousness may be based upon a combination of references. I am informed by Counsel and understand that the combination of familiar elements according to known methods is likely to be obvious when it does no more than yield predictable results. However, I am informed by Counsel and understand that a patent claim composed of several elements is not proved obvious merely by demonstrating that each of its elements was, independently, known in the prior art.

44. I am informed by Counsel and understand that when a patented

invention is a combination of known elements, a court determines whether there was an apparent reason to combine the known elements in the fashion claimed by the patent at issue by considering the teachings of prior art references, the effects of demands known to people working in the field or present in the marketplace, and the background knowledge possessed by a person having ordinary skill in the art.

45. I am informed by Counsel and understand that a patent claim composed of several limitations is not proved obvious merely by demonstrating that each of its limitations was independently known in the prior art. I am informed by Counsel and understand that identifying a reason those elements would be combined can be important because inventions in many instances rely upon building blocks long since uncovered, and claimed discoveries almost of necessity will be combinations of what, in some sense, is already known. I am informed by Counsel and understand that it is improper to use hindsight in an obviousness analysis, and that a patent's claims should not be used as a "roadmap."

46. I am informed by Counsel and understand that an obviousness inquiry requires consideration of the following factors: (1) the scope and content of the prior art, (2) the differences between the prior art and the claims, (3) the level of ordinary skill in the art, and (4) any so called "secondary considerations" of non-obviousness, which include: (i) "long felt need" for the claimed invention, (ii)

commercial success attributable to the claimed invention, (iii) unexpected results of the claimed invention, and (iv) "copying" of the claimed invention by others.

47. I have been informed by Counsel and understand that an obviousness evaluation can be based on a single reference or a combination of multiple prior art references. I understand that the prior art references themselves may provide a suggestion, motivation, or reason to combine, but that the nexus linking two or more prior art references is sometimes simple common sense. I have been informed by Counsel and understand that obviousness analysis recognizes that market demand, rather than scientific literature, often drives innovation, and that a motivation to combine references may be supplied by the direction of the marketplace.

48. I have been informed by Counsel and understand that if a technique has been used to improve one device, and a person of ordinary skill at the time of invention would have recognized that it would improve similar devices in the same way, using the technique is obvious unless its actual application is beyond his or her skill.

49. I have been informed by Counsel and understand that practical and common sense considerations should guide a proper obviousness analysis, because familiar items may have obvious uses beyond their primary purposes. I have been informed by Counsel and understand that a person of ordinary skill looking to

overcome a problem will often be able to fit together the teachings of multiple prior art references. I have been informed by Counsel and understand that obviousness analysis therefore takes into account the inferences and creative steps that a person of ordinary skill would have employed at the time of invention.

50. I have been informed by Counsel and understand that a proper obviousness analysis focuses on what was known or obvious to a person of ordinary skill at the time of invention, not just the patentee. Accordingly, I understand that any need or problem known in the field of endeavor at the time of invention and addressed by the patent can provide a reason for combining the elements in the manner claimed.

51. I have been informed by Counsel and understand that a claim can be obvious in light of a single reference, without the need to combine references, if the elements of the claim that are not found explicitly or inherently in the reference can be supplied by the common sense of one of skill in the art.

52. In sum, my understanding is that prior art teachings are properly combined where one of ordinary skill having the understanding and knowledge reflected in the prior art and motivated by the general problem facing the inventor, would have been led to make the combination of elements recited in the claims. Under this analysis, the prior art references themselves, or any need or problem known in the field of endeavor at the time of the invention, can provide a reason

for combining the elements of multiple prior art references in the claimed manner.

53. I have been informed by Counsel and understand that in an *inter partes* review, "the petitioner shall have the burden of proving a proposition of unpatentability," including a proposition of obviousness, "by a preponderance of the evidence." 35 U.S.C. §316(e).

VI. MATERIALS CONSIDERED

54. My analysis and conclusions set forth in this declaration are based on my educational background and experiences in the field (*see* Section II). Based on my knowledge and experience, I believe that I am considered to be an expert in the field. Also, based on my knowledge and experience, I understand and know of the capabilities of persons of ordinary skill in the field around the Critical Date, and I taught, participated in organizations, and worked closely with many such persons in the field during that time frame. By the Critical Date, I possessed over 20 years of experience working with research and industry partners as part of wireless research and development work, executing as a principal investigator and technical lead, guiding teams of hardware and software engineers, teaching undergrad and graduate courses in wireless communications, mobile networks, wireless security, and computer networks, as well as guiding research of graduate and undergraduate students in these areas. I have participated in dozens of classified and unclassified conferences and meetings as well as being an engaged member of IEEE over the

decades.

55. As part of my independent analysis for this declaration, I have considered the following: the background knowledge/technologies that were commonly known to persons of ordinary skill in this art during the time before the Critical Date; my own knowledge and experiences gained from my work experience in the field of the ’597 patent and related disciplines; and my experience in working with others involved in this field and related disciplines.

56. In addition, I have analyzed the publications and materials listed above.

57. My analysis and conclusions set forth in this declaration are based on the perspective of a POSITA.

VII. TECHNOLOGY OVERVIEW

58. In this section I provide an overview of the relevant technology and state of the technical community before the Critical Date. This description is not intended to be exhaustive, but to provide sufficient background to support and contextualize my analysis below.

A. 802.11 Technical Background

59. IEEE 802.11 is a wireless LAN standard that was developed by the Institute of Electrical and Electronic Engineers (IEEE) in the 1990’s. IEEE 802.11 allows for two different types of networks: independent and infrastructure. In

independent networks, wireless terminals, or stations, communicate directly with each other. Figure 4-1 (taken from the 802.11-2016 specification) shows two independent networks, or Basic Service Sets (BSSs). In the figure, each BSS consists of a pair of stations (STAs), though in general a BSS can consist of dozens or even hundreds of stations and may contain an access point (AP).

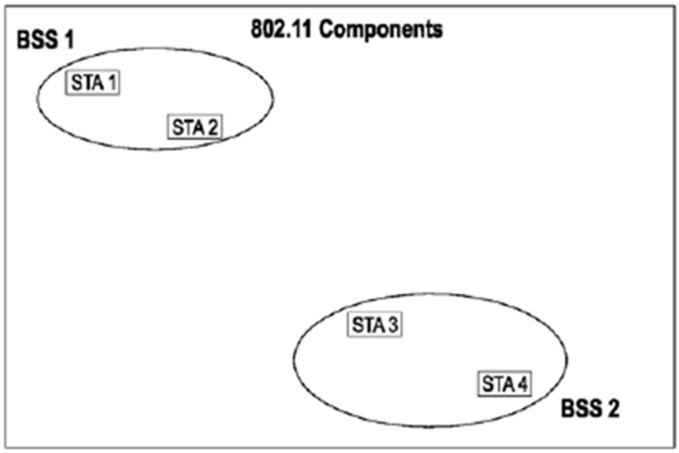

Figure 4-1—BSSs

SAMSUNG-1020, FIG. 4.1.

60. The specification notes that independent networks are often referred to as ad hoc networks. "The IBSS is the most basic type of IEEE 802.11 LAN. Since the BSSs shown in Figure 4-1 are simple and lack other components (contrast this with Figure 4-2), the two can be taken to be representative of two IBSSs. This mode of operation is possible when IEEE 802.11 STAs are able to communicate directly. Because this type of IEEE 802.11 LAN is often formed without preplanning, for only as long as the LAN is needed. " IEEE Std 802.11-

2016, December 2016, pg. 185. Ad hoc networks are distinguished from infrastructure networks, which use relatively permanent access points as the basis for wireless communication.

> The acces pointscan connect remote users to a gateway for access to other networks. In an 802.11 infrastructure network, the remote stations must associate with an access point before they can communicate with any other remote station or to other networks via the AP. Remote stations are still permitted to communicate with each other, but all traffic has to be routed through the access point with which the transmitting station has associated. The figure below shows two 802.11 LANs (BSS1 and BSS2) connected to each other and the Internet through a switch or router.

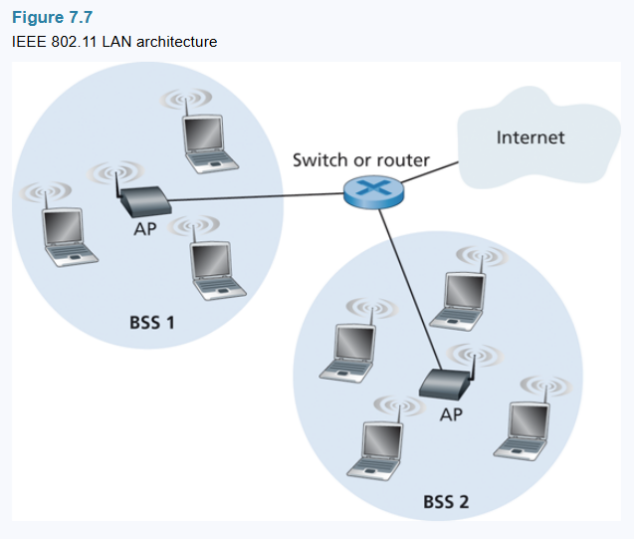

SAMSUNG-1019, Page 544, FIG. 7.7.

61. The 802.11 standard also defines an Extended Service Set (ESS) which is a configuration of the infrastructure architecture that extends the coverage

of a single wireless network to an arbitrarily large area. This can be accomplished by connecting multiple LANs with APs using the same Service Set Identifier (SSID) via a Distribution System (DS) so they effectively act as a single BSS although multiple APs are involved. *See* SAMSUNG-1020, Page 187. Figure 4.3 illustrates the ESS concept. APs with the same SSID are distinguished by their individual MAC addresses.

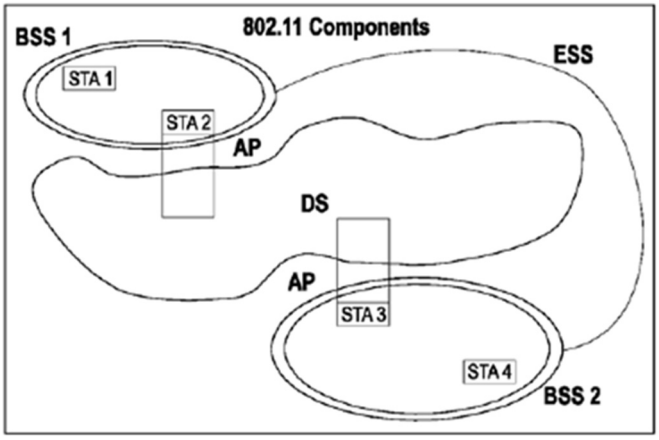

Figure 4-3—ESS

SAMSUNG-1020, FIG. 4.3.

62. The 802.11 standard also indicates that the physical configuration of an ESS is not limited by physical locations of the individual BSSs. "The following are possible: a) The BSSs partially overlap. This is commonly used to arrange coverage within a physical volume. b) The BSSs could be physically disjoint. Logically there is no limit to the distanced between BSSs. c) The BSSs are physically collocated. This could be done to provide redundancy." *Id.*

63. When entering an infrastructure network, a station will first listen for

a beacon in an attempt to determine which APs are present. Once an AP has been identified and selected, the station will initiate the "association service."

> A STA learns what APs are present and what operational capabilities are available from each of those APs and then invokes the association service to establish an association. For details of how a STA learns about what APs are present, see 11.1.4.

Id. p. 221.

64. The network administrator setting up the network assigns a one- or two-word SSID with no restriction on the choice other than it is an octet string with a valid range of 0-32 octets. See *Id.* p. 790. In order to learn what APs are available the STA uses one of two methods known as passive and active scanning. In passive scanning, the STA scans the RF channels associated with 802.11 to listen for beacon frames which are periodically broadcast by the APs and includes their SSID and MAC address (also known as the Basic SSID (BSSID)). Once APs are detected, the STA selects one and initiates an association attempt. In active scanning, the STA transmits (hence active) a 'probe frame' which will be received by APs within propagation distance and to which the AP responds with a 'probe response'. The figure below shows the passive and active scanning scenarios along with the high-level steps for each method. In this figure the illustrated service areas for each BSS (the shaded regions) provide an example of two BSSs with

overlapping coverage for the STA (H1) and represents a example of Overlapping BSS (OBSS).

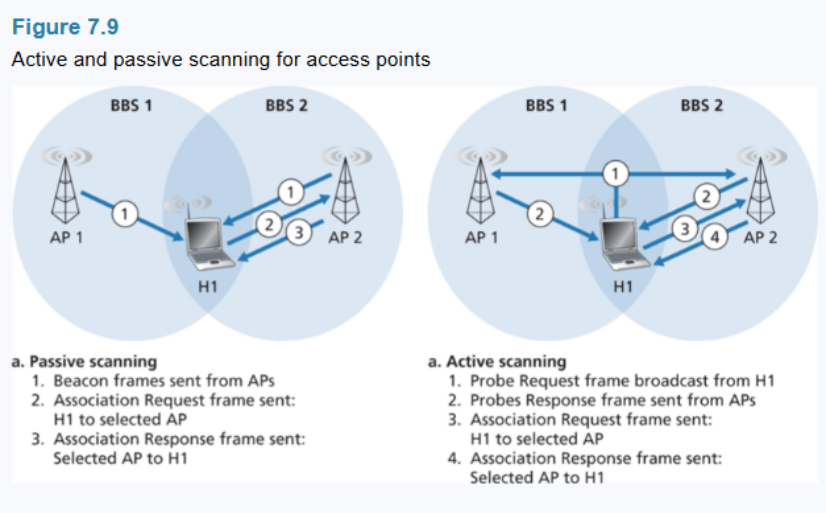

SAMSUNG-1019, Page 547, FIG. 7.9.

65. Since the initial release of IEEE 802.11 in 1997, it has gone through many updates. In 2009 802.11n was released which included an upgrade known as High Throughput (HT). In the table below from Kurose and Ross (2021) you can see the IEEE 802.11n standard (WiFi 4) indicating the significant increase in throughput (achieved by including SU-MIMO, 4 spatial streams, and 40MHz bandwidth capability) vs. previous generations of the standard, hence the moniker. Very High Throughput (VHT) is a term associated with the 2013 IEEE 802.11ac (WiFi 5) which made further enhancements to the physical layer (160 MHz) bandwidths, 8 spatial streams, and higher-order modulation). High Efficiency (HE) is used to distinguish the capabilities introduced in 2021 IEEE 802.11ax (WiFi 6) including improved network efficiency, throughput, and latency in very dense

environments and included physi al layer upgrades such as OFDMA, MU-MIMO, and even even higher moudaltion rates.

Table 7.1

Summary of IEEE 802.11 standards

IEEE 802.11 standard	Year	Max data rate	Range	Frequency
802.11 b	1999	11 Mbps	30 m	2.4 Ghz
802.11 g	2003	54 Mbps	30 m	2.4 Ghz
802.11 n (WiFi 4)	2009	600	70 m	2.4, 5 Ghz
802.11 ac (WiFi 5)	2013	3.47 Gpbs	70 m	5 Ghz
802.11 ax (WiFi 6)	2020 (expected)	14 Gbps	70 m	2.4, 5 Ghz
802.11 af	2014	35–560 Mbps	1 Km	unused TV bands (54–790 MHz)
802.11 ah	2017	347 Mbps	1 Km	900 Mhz

Id. p. 543.

66. A common, well known, phenomenon associated with any wireless network is the 'hidden terminal problem.' This is where one node (B) in a network can 'see' (meaning sense the RF transmissions of) two other nodes (A and C) in the network, but the other two nodes (A and C), can't see each other. This creates a significant potential problem where collisions (simultaneous transmissions) occur which limits successful data/packet exchanges in the network. Figure 7.4 shown below illustrates the hidden terminal problem in wireless networks.

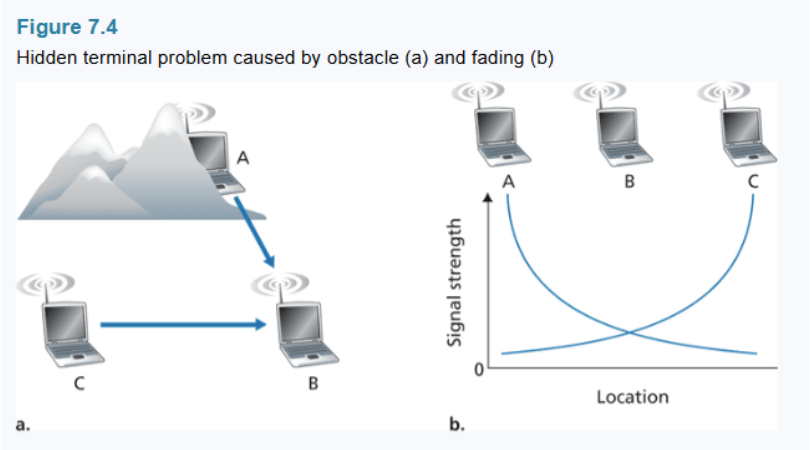

Id., Page 538.

67. This problem is addressed by specific signaling frames known as Request to Send (RTS) and Clear to Send (CTS) where, for example, terminal/node A sends out a RTS received by terminal B, and if there are no other transmissions detected by terminal B (that is, potential collisions), terminal B responds with a CTS frame (which reserves the channel) which can be seen by both terminal A and terminal C to prevent terminal C from transmitting and colliding with terminal A's transmission.

68. The IEEE 802.11 standard also implements a particular multiple access (MA) protocol which permits multiple devices to share a common resource (time and frequency) and is known in the art as a 'random access protocol' where any node (terminal) at any time can decide to transmit data or control signaling. The specific flavor of MA implemented in 802.11 is Carrier Sense Multiple Access (CSMA) with Collision Avoidance (CA) or CSMA/CA. This is implemented at the

Medium Access Control (MAC) sub-layer of the Data Link layer of the protocol stack (the layer right above the physical layer). As the name suggests, CSMA/CA is a protocol where each terminal is responsible to 'listen-before-talk' to see if another terminal is transmitting energy to refrain from transmitting if it is the case (thus, CA) and make a decision of when to revisit the attempt to transmit. The physical action of listening to the local RF environment to determine whether another terminal is transmitting is called Clear Channel Assessment (CCA) and involves carrier sensing (CS) and/or energy detection (ED). These actions occurs in the Physical Layer Convergence Protocol (PLCP) sub-layer of the physical layer of the 802.11 protocol stack.

69. One of the improvements included in 802.11ax to enable more efficient use of limited resources (frequency) in very dense user environments is a BSS color. The BSS color (Color Code (CC)) is carried in the header of the physical layer frame and enables an IEEE 802.11ax STA to determine whether simultaneous use of the frequency spectrum is permitted given it is in an OBSS context. Each BSS is intended to have a unique CC and, thus, rules to guide the STA in performing a CCA CS using the CC (that is, setting a detection threshold based on the CC when in an OBSS context) enables the STA to drop packets from the OBSS and transmit in the same frequency resource space.

VIII. THE '597 PATENT

A. Overview of the '597 Patent

70. The '597 Patent is directed to a wireless device that receives data frames and classifies them as Intra-Basic Service Set ("BSS") frames or Inter-BSS frames based on BSS color. SAMSUNG-1001, Abstract, 13:7-9. When the wireless device receives a PPDU and signaling information indicates that an operation based on BSS color is not allowed, the device does not perform operations based on the BSS color indicated by the PPDU. *Id.*, cl. 1.

B. Prosecution History of the '597 Patent

71. Examination of the '597 Patent was limited. *See*, *generally*, SAMSUNG-1002. The only rejection raised by the Examiner was a double patenting rejection over U.S. Patent No. 11,129,163 and Patent Owner filed a terminal disclaimer to overcome it. *Id.*, 48-64.

IX. OVERVIEW AND COMBINATIONS OF PRIOR ART REFERENCES

A. Lee

72. Lee discloses a method for performing a clear channel assessment ("CCA") by a station ("STA") in a wireless communication system. SAMSUNG-1005, Abstract. The method is performed in a Wireless Local Area Network ("WLAN") system, like those contemplated in IEEE 802.11ax (i.e., Wi-Fi 6), that includes multiple basic service sets ("BSSs"), as shown in Figure 1, below. *Id.*, [0033], [0062]. A BSS is "a set of stations (STAs) capable of communicating with

each other by successfully establishing synchronization." SAMSUNG-1005, [0034].

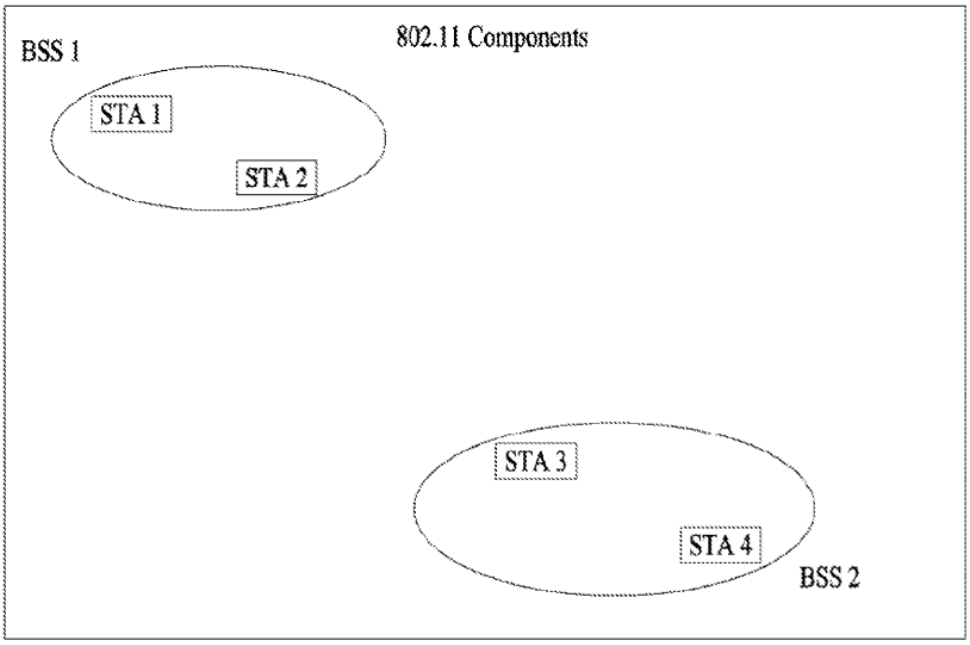

SAMSUNG-1005, FIG. 1.

73. CCA is a process performed by a STA to determine whether a wireless medium is busy such that the STA cannot transmit. SAMSUNG-1005, [0063]. The medium is determined to be busy or idle based on comparison of the strength of a received signal (i.e., "reception level") to a CCA level. *Id.*, [0012]-[0013]. If the received signal strength is higher than the CCA level, "the STA may not perform transmission…." *Id.*, [0013]. Conversely, if the received signal strength is lower than the CCA level, "the STA may perform transmission…." *Id.*, [0014]. Lee contemplates that different CCA levels may be applied based on whether a frame is associated with the STA's BSS or another BSS. *Id.*, [0007],

[0067]. In this regard, Lee explains that 802.11ax includes "various methods … to increase a CCA level" with the goal of "increase[ing] a frequency reuse rate." *Id.* [0062].

74. Lee describes a method of CCA whereby a STA "receiv[es] a frame including a coloring bit" as part of a Physical Layer Convergence Procedure ("PLCP") Protocol Data Unit (altogether, "PPDU"). SAMSUNG-1005, [0007], [0016]. The "coloring bit"—or "BSS coloring bit"—is an identifier for a BSS that is checked by the STA upon receipt of a PPDU. SAMSUNG-1005, [0064] ("BSS coloring bits can be differently set according to a BSS."). The received frame may also include a "coloring disable bit." *Id.*, [0068]. Both "[t]he coloring bit and the coloring disable bit can be included in a HE-SIG field" of the PPDU. *Id.*, [0017]; *see also id.*, [0016]. Further, the system "may use a reserved field of a legacy BSS coloring bit … field without separately defining a coloring disable bit." SAMSUNG-1005, [0075].

75. In Lee, a STA receives a frame and analyzes the coloring bit. SAMSUNG-1005, [0067]. If the coloring bit indicates that the frame was transmitted by a device within the STA's BSS, the STA changes the CCA level to a "first level." *Id.* Alternatively, if the coloring bit indicates that the frame was transmitted by a device outside of the STA's BSS, the STA changes the CCA level to a "second level." *Id.* STAs generally perform CCA by using a lower CCA level

for frames from within the STA's BSS (i.e., intra-BSS frames) than for frames from outside the STA's BSS (i.e., inter-BSS frames). *See* SAMSUNG-1001, 33:7-10 ("At this time, the wireless communication terminal may use the enhanced CCA level. Specifically, the wireless communication terminal may use the CCA level corresponding to the inter-BSS frame."); SAMSUNG-1005, [0015] ("The first level may correspond to a value lower than a case that the change of the CCA level is not performed and the second level may correspond to a value higher than the case that the change of the CCA level is not performed."). In other words, Lee's "first level" is generally lower than the "second level." Once the CCA level is set, the STA then "perform[s] CCA according to the first level or the second level." SAMSUNG-1005, [0067]. However, "if the coloring disable bit indicates that the frame corresponds to a trigger frame related to multiuser transmission, the STA may not perform the change of the CCA level irrespective of information indicated by the coloring bit." *Id.*, [0068].

76. The Lee Device ("LD") includes the STA components shown in Fig. 8 below. The LD "can include a processor 21 … and a transceiver 23." SAMSUNG-1005, [0093]. The transceiver "can transmit and receive a radio signal." *Id.* The processor is connected to the transceiver and implements the IEEE 802 physical layer and/or a Medium Access Control ("MAC") layer. *Id.* Further, "[t]he processor 11/21 can be configured to perform operations according

to [Lee's] … invention." *Id.*

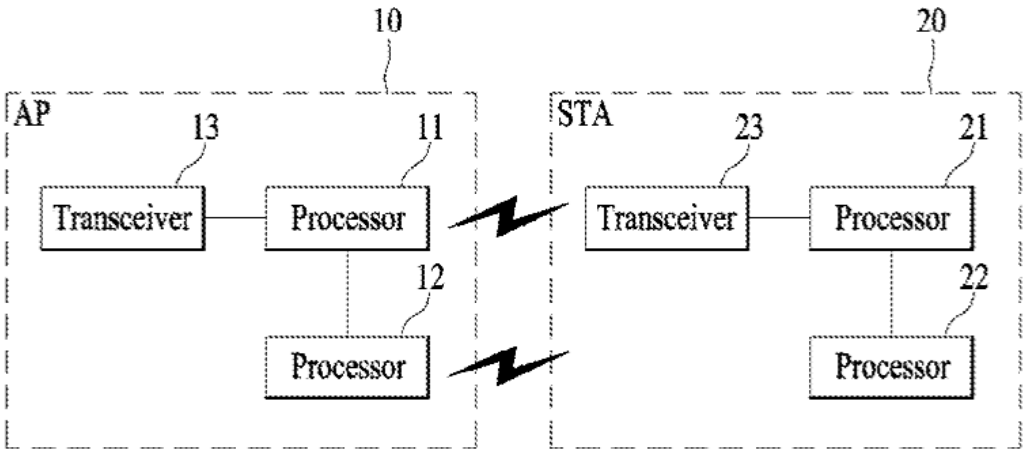

SAMSUNG-1005, FIG. 8.

B. Stacey

77. Stacey teaches a device using two network allocation vectors ("NAVs")—an intra-BSS NAV and a regular NAV. SAMSUNG-1006, 39. The intra-BSS NAV is set based on an intra-BSS frame. *Id.* The regular NAV is set based on an inter-BSS frame or a frame that cannot be identified as an inter- or intra-BSS frame. *Id.* To determine the BSS from which a PPDU originates (i.e., to determine whether the PPDU is an inter- or intra-BSS PPDU), Stacey uses the BSS Color as an identifier of the BSS. *Id.*, 51.

78. Stacey further teaches that a STA may "receive[] a valid HE-SIG-A in a HE PPDU" and that the HE-SIG-A may include a "TXOP Duration Field." SAMSUNG-1006, 39. The STA may also receive a valid frame in a PLCP Service Data Unit (PSDU) that includes a "valid Duration field." *Id.* Both the HE-SIG-A

"TXOP Duration Field" and the "valid Duration field" of the PSDU are used to update the intra-BSS NAV and the regular NAV. *Id.* Further, Stacey teaches that "[w]hen a STA receives both a valid HE-SIG-A in a HE PPDU and a valid frame in the PSDU of the HE PPDU, the STA shall not update its Intra-BSS NAV or regular NAV with the information from the TXOP Duration field in the HE-SIG-A." *Id.*

79. Stacey also discloses that "[a]n HE non-AP STA that is in intra-PPDU power save mode may enter the doze state until the end of a received PPDU" under three conditions. SAMSUNG-1006, 51-52. Each of the three conditions requires, among other things, that "[t]he value of the RXVECTOR parameter BSS_COLOR [is] equal to the BSS color of the BSS with which the STA is associated…." *Id.* In other words, the STA may only enter a doze state when the received PPDU is an intra-BSS PPDU and other conditions are met.

C. Zhou

80. Zhou teaches a "wireless system" that "may detect that two BSSs are associated with a color collision." SAMSUNG-1007, [0005]; SAMSUNG-1008, [0004]. A color collision occurs when "the two BSSs are using the same color bits." SAMSUNG-1007, [0005]; SAMSUNG-1008, [0004]. As one way of determining whether a color collision has occurred, Zhou describes "receiv[ing] frames … that have identical color values" and "comparing the MAC addresses" of

two received frames to "determine that the frames are from different BSSs." SAMSUNG-1007, [0070]; SAMSUNG-1008, [0071].

81. Zhou further describes that the device may report the detected color collision to an AP in the form of a "collision report." SAMSUNG-1007, [0071]; SAMSUNG-1008, [0072]. The collision report "may be a single bit indicating that a collision occurred." SAMSUNG-1007, [0071]; SAMSUNG-1008, [0072]. In response to the collision report, the AP may transmit a "color change announcement" that includes a "scheduled change time." SAMSUNG-1007, [0081]; SAMSUNG-1008, [0082]. The color change announcement also includes "an indication of a transmission restriction mode" that "indicates whether the associated STAs … are allowed to transmit before the scheduled change time." SAMSUNG-1007, [0063], [0081]; SAMSUNG-1008, [0064], [0082].

D. Choudhury

82. Choudhury describes a device that determines whether to reuse a wireless channel. SAMSUNG-1009, [0009], [0025]. The device may receive a "COLOR field" that indicates the BSS associated with a transmitting device. SAMSUNG-1009, [0025]. Choudhury explains that the device uses the COLOR field to determine whether an ongoing transmission is an "intra-BSS transmission." *Id.* If the transmission is an "intra-BSS transmission" (i.e., a transmission from a STA in the device's BSS), the STA will not reuse the wireless channel. *Id.*

However, if the transmission is from an "OBSS STA" (i.e., a STA in a different BSS), the device may be able to use the channel by, for example, performing CCA with a higher CCA threshold. *Id.* Choudhury further describes that a device can signal that it is experiencing high interference such that other STAs should not reuse the channel. *Id.*, [0026]. A device may signal a high interference state through either a designated bit or by setting the COLOR field to a specific value (e.g., "0000"). *Id.*, [0026], [0029]. According to Choudhury, a STA that decodes a value of "0000" in the COLOR field of a received transmission may be "required to defer channel access" (i.e., not reuse the wireless channel). *Id.*, [0029].

X. Ground 1A: Lee renders claims 1, 7, 9, and 15 obvious

A. Analysis

[1.1] A wireless communication terminal communicating wirelessly, the wireless communication terminal comprising:

83. To the extent the preamble is limiting, Lee renders it obvious. Lee teaches a method of CCA "which is performed by a[] STA in a wireless communication system…." SAMSUNG-1005, [0007]. Lee explains that a STA "may be called another name such as a terminal, a wireless transmit/receive unit (WTRU), a user equipment (UE), a mobile station (MS), a mobile terminal, a mobile subscriber unit, or the like." *id.*, [0035] (emphasis added). Fig. 1, below shows several STAs (i.e., "wireless communication terminal[s] communicating wirelessly") operating and communicating wirelessly within a Wireless Local Area

Network (WLAN) system:

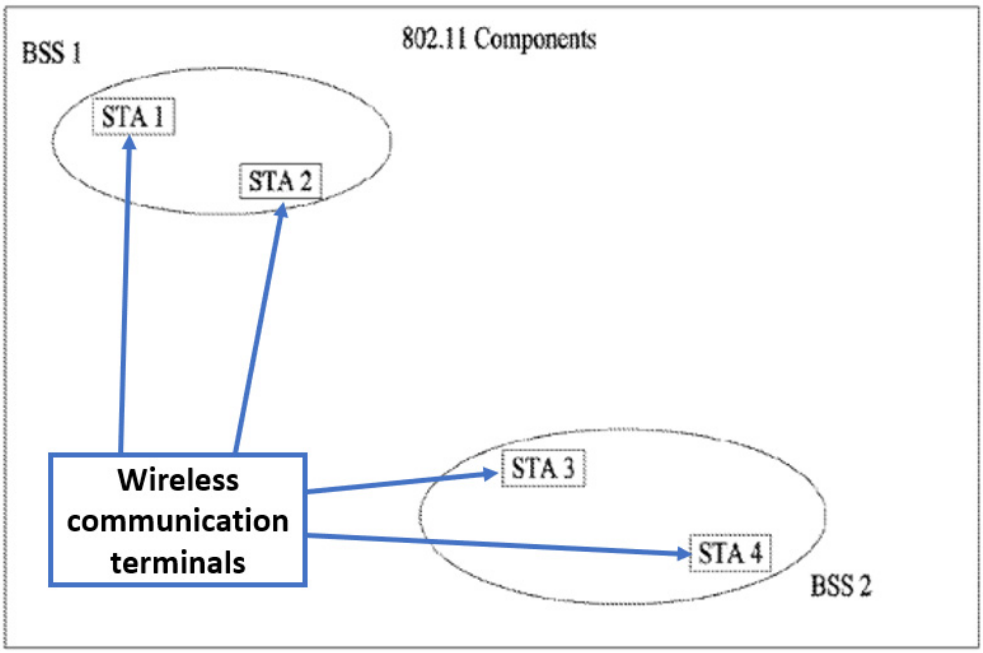

SAMSUNG-1005, Fig. 1 (annotated).

[1.2] a transceiver; and

84. Lee renders [1.2] obvious. Lee explains that "STA 20 can include … a transceiver 23." SAMSUNG-1005, [0093]. Lee further discloses that "[t]he transceiver 13/23 can transmit and receive a radio signal" and "can implement a physical layer according to IEEE 802 system." *Id.* Fig. 8, below, is "a block diagram for a configuration of a wireless device" and illustrates a STA comprising a transceiver:

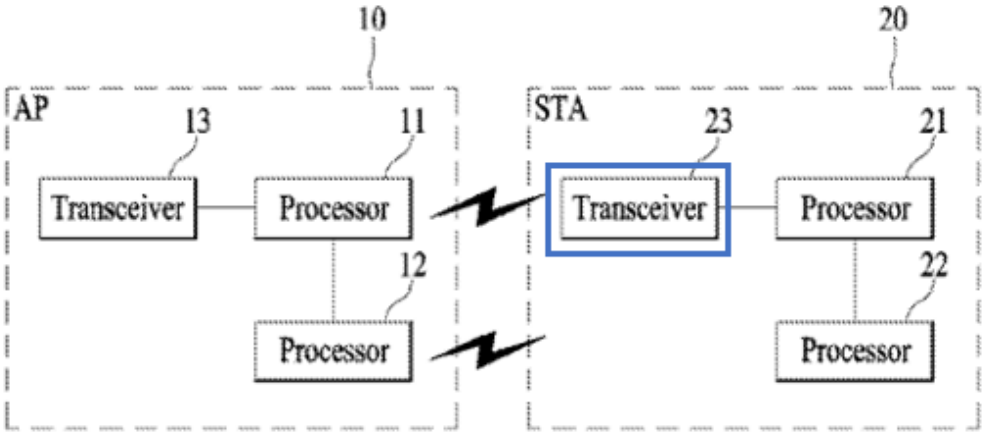

SAMSUNG-1005, Fig. 8 (annotated).

[1.3] a processor,

85. Lee renders [1.3] obvious. Lee explains that "STA 20 can include a processor…." SAMSUNG-1005, [0093]. Lee further discloses that "[t]he processor 11/21 can implement a physical layer and/or a MAC layer according to IEEE 802 system…." *Id.* Fig. 8, below, illustrates a wireless device including a processor as contemplated by Lee:

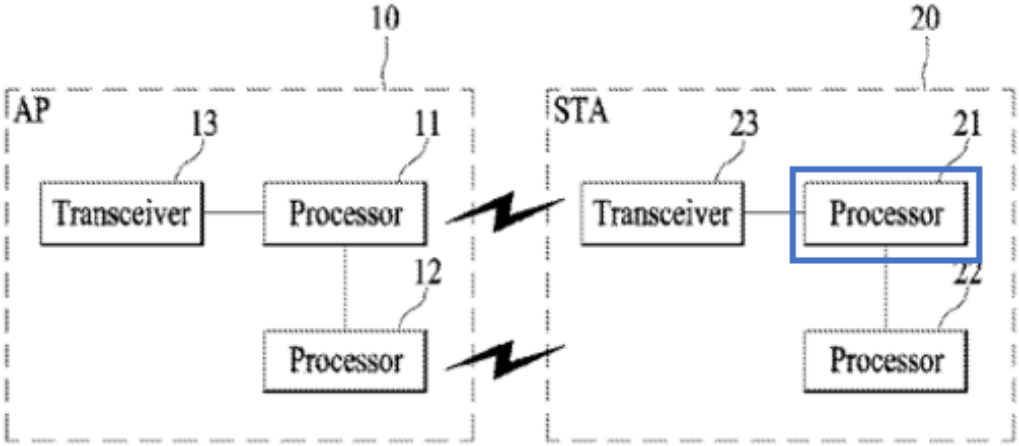

SAMSUNG-1005, Fig. 8 (annotated).

[1.4] wherein the processor is configured to receive a physical layer convergence procedure (PLCP) Protocol Data Unit (PPDU) by using the transceiver, and not to use a Basic Service Set (BSS) color indicated by the PPDU when signaling information indicates that an operation based on the BSS color is not allowed,

86. Lee renders [1.4] obvious. Lee discloses that "[t]he processor 11/21 can be configured to perform operations according to … the present invention." SAMSUNG-1005, [0093]. The processor is "connected with the transceiver," which can "receive a radio signal." *Id.* The STA receives a frame, which "may correspond to a HE-PPDU (high efficiency PLCP protocol data unit) frame," that includes a "coloring bit" and a "coloring disable bit." *Id.*, [0016], [0067]-[0068]. Based on Lee's disclosure, a POSITA would have found it obvious that the PPDU and frame are received by the STA's processor using the STA's transceiver.

87. In addition, in Lee, the "coloring disable bit can be included in a HE-SIG field" of the PPDU. SAMSUNG-1005, [0017]. The '597 Patent explains that the HE-SIG-A field of the PPDU may be the "signaling field" and, further, that the "signaling field" may include "signaling information." SAMSUNG-1001 at 14:57-58, 21:49-53. Thus, a POSITA would have understood or found it obvious that Lee's coloring disable bit in the PPDU's HE-SIG field is signaling information.

88. Lee further explains that the STA performs a CCA level change based on the "coloring bit" in the received frame. Specifically, the STA sets the CCA level to a "first level" if "the coloring bit indicates a BSS to which the STA belongs," and a "second level" if "the coloring bit indicates a BSS to which the

STA does not belong…." SAMSUNG-1005, [0067]. Once the CCA level is set, "the STA can perform CCA according to the first level or the second level." *Id.* Because Lee's CCA level is set using the value of the coloring bit, Lee's CCA level change is an operation based on the BSS color.

89. However, "if the coloring disable bit indicates that the frame corresponds to a trigger frame related to multiuser transmission, the STA may not perform the change of the CCA level irrespective of information indicated by the coloring bit." SAMSUNG-1005, [0068] (emphasis added). In this way, Lee's "coloring disable bit" disables use of the BSS color and the STA operates "without regard to information indicated by the coloring bit." *Id.*, Abstract, [0007]-[0008], cls. 1, 6. Through this disclosure, Lee renders obvious that the "coloring bit" (i.e., the BSS color indicated by the PPDU) is not used when the "coloring disable bit" (i.e., signaling information) indicates that a CCA level change (i.e., an operation based on the BSS color) is not allowed.

[1.5] wherein the BSS color is an identifier of a BSS,

90. Lee renders [1.5] obvious. Lee's "BSS coloring bits can be differently set according to a BSS." SAMSUNG-1005, [0064]. Lee further explains that a STA checks the coloring bit to determine whether "the coloring bit indicates a BSS to which the STA belongs thereto" or "the coloring bit indicates a BSS to which the STA does not belong." *Id.*, [0067] (emphasis added). BSS color

was a well-known BSS identifier and, by using the coloring bit to determine whether a received PPDU originated from a device within the STA's BSS, Lee uses its coloring bit in a manner consistent with the well-known use of BSS color and renders obvious that the "coloring bit" is an identifier of a BSS. SAMSUNG-1006, 51 ("The BSS Color is an identifier of the BSS and is used to assist a receiving STA in identifying the BSS from which a PPDU originates…."); SAMSUNG-1010, 5 ("In the IEEE 802.11ah standard, in the sub-1GHz band, BSS color is introduced for identification of which BSS the packet is from."); SAMSUNG-1011, [0014] ("The information on the BSS may include a BSS color identifier for distinguishing neighboring BSSs.").

[1.6] wherein the signaling information is transmitted from a base wireless communication terminal to which the wireless communication terminal is associated.

91. Lee renders [1.6] obvious. Lee explains that an access point ("AP") "can transmit a trigger frame" and "a trigger frame is received [by a STA] from an AP…." SAMSUNG-1005, [0065], [0069]. The trigger frame received by the STA includes the "coloring disable bit," which "can be included in the HE-SIG field." *Id.*, [0068], [0017]. As discussed above at [1.4], a POSITA would have understood or found obvious that data included in the HE-SIG field of a PPDU—such as the "coloring disable bit" here—constitutes signaling information.

92. Lee also discloses that "the AP is an entity that provides an ***associated***

STA, which is associated with the corresponding AP, with an access to a distribution system (DS) through a radio medium." SAMSUNG-1005, [0036] (emphasis added). The AP "may be called a concentrated controller, a ***base station (BS)***, a Node-B, a ***BTS (base transceiver system)***, a site controller, or the like." *Id*., [0036] (emphasis added). An AP is a well-known type of base wireless communication terminal and, from Lee's disclosure, a POSITA would have understood or found obvious that Lee's AP serves as a base wireless communication terminal. *See* SAMSUNG-1001, 7:61-65 ("[T]he AP … may include concepts including … a base station (BS), …. [and] a base transceiver system (BTS)…."), 10:46-47 ("[T]he AP 200 may be a wireless communication terminal….").

93. Therefore, Lee renders obvious that the "coloring disable bit" (i.e., signaling information) is transmitted from an AP (i.e., a base wireless communication terminal) to which the STA is associated.

[7] The wireless communication terminal of claim 1, wherein the processor is configured not to perform a spatial reuse operation when the BSS color indicated by a signaling field of the PPDU is a predetermined value.

94. Lee renders [7] obvious. Lee discloses that "IEEE 802.11ax considers a case that there are huge number of STAs and APs." SAMSUNG-1005, [0062]. Thus, "various methods are used to increase a CCA level" in order to "increase a frequency reuse rate." *Id.* A POSITA would have understood or found obvious

that CCA level change is a spatial reuse operation because the STA performs CCA to determine whether the wireless medium is busy or idle—that is, to determine whether the STA can reuse the medium by transmitting its own data. SAMSUNG-1005, [0064], [0086]; SAMSUNG-1015, [0077] ("Basically, a spatial reuse rate may be increased by the use of a CCA level higher than in a legacy system…."), [0122] ("[S]patial reuse may be performed according to the 11ax CCA level."). As explained above in [1.4], in Lee, CCA (i.e., a spatial reuse operation) is not performed when the coloring disable bit indicates that a received frame is a trigger frame related to multiuser transmission. SAMSUNG-1005, [0068].

95. Lee further describes that its system "may use a reserved field of a legacy BSS coloring bit … field without separately defining a coloring disable bit." SAMSUNG-1005, [0075]. Through this disclosure, a POSITA would have understood or found obvious that, in Lee, the field of the legacy BSS coloring bit can be used to implement the coloring disable bit functionality. In this regard, instead of setting the coloring disable bit to a predetermined value (e.g., 1), Lee's system sets the legacy BSS coloring bit to a predetermined value (e.g., 0) to indicate that the frame corresponds to a trigger frame and, consequently, that BSS color should not be used for CCA.

96. Lastly, Lee discloses that the coloring bit may be in the HE-SIG field of the PPDU. SAMSUNG-1005, [0017]. As described above in [1.4], the '597

Patent explains that the HE-SIG-A field may be the "signaling field" that contains "signaling information." SAMSUNG-1001, 14:57-58, 21:49-53. A POSITA would thus have understood or found obvious that the value indicated by Lee's coloring bit is the BSS color indicated by the signaling field of the PPDU.

97. Therefore, Lee renders obvious that CCA level change is not performed (i.e., the processor is configured not to perform a spatial reuse operation) when the BSS color indicated by the legacy coloring bit (i.e., a signaling field of the PPDU) is a predetermined value.

[9.1] A method of operating a wireless communication terminal communicating wirelessly, the method comprising:

98. To the extent the preamble is limiting, Lee renders it obvious. Lee teaches an operation method of a STA, which is a wireless communication terminal communicating wirelessly. §X.A.[1.1].

[9.2] receiving a physical layer convergence procedure (PLCP) Protocol Data Unit (PPDU); and

99. Lee renders [9.2] obvious. Lee discloses receiving a PPDU. §X.A.[1.4].

[9.3] not using a Basic Service Set (BSS) color indicated by the PPDU when signaling information indicates that an operation based on the BSS color is not allowed,

100. Lee renders [9.3] obvious. Lee discloses not performing a CCA level change based on the coloring bit (i.e., not using a BSS color indicated by the PPDU) when a coloring disable bit (i.e., signaling information) indicates CCA

level change (i.e., an operation based on the BSS color) is not allowed.

§X.A.[1.4].

[9.4] wherein the BSS color is an identifier of a BSS,

101. Lee renders [9.4] obvious. Lee makes clear that a "coloring bit" is an identifier of a BSS. §X.A.[1.5].

[9.5] wherein the signaling information is transmitted from a base wireless communication terminal to which the wireless communication terminal is associated.

102. Lee renders [9.5] obvious. Lee discloses that the "coloring disable bit" (i.e., signaling information) is transmitted from an AP (i.e., a base wireless communication terminal) to which the STA is associated. §X.A.[1.6].

[15] The method of claim 9, wherein the method further comprises not performing a spatial reuse operation when the BSS color indicated by a signaling field of the PPDU is a predetermined value.

103. Lee renders [15] obvious. Lee discloses that CCA level change is not performed (i.e., the processor is configured not to perform a spatial reuse operation) when the legacy BSS coloring bit (i.e., the BSS color indicated by a signaling field of the PPDU) is set to a predetermined value. §X.A.[7].

XI. Ground 1B: Lee-Stacey renders claims 2-3, 6, 10-11, and 14 obvious

A. Lee-Stacey combination

104. Lee provides a method of performing CCA (i.e., a spatial reuse operation) based on BSS color. SAMSUNG-1005, Abstract, [0007], [0067]. Lee further discloses a "coloring disable bit" which, along with the BSS color, may be

included in the HE-SIG field of the PPDU. *Id.*, [0017], [0068]. According to Lee, when a device receives a frame and the "coloring disable bit" indicates the frame is a trigger frame, the device does not perform the CCA level change procedure regardless of BSS color. *Id.* According to Lee, CCA level change should not be performed based on a trigger frame sent by an AP because this may result in the receiving device interfering with transmission of trigger-based PPDUs sent by other STAs in the BSS (i.e., PPDUs sent by other STAs in response to the trigger frame sent by the AP). *Id.*, [0069].

105. Lee recognizes that, in certain situations, BSS color-based operations should not be performed; namely, CCA level change should not be performed when the STA receives a trigger frame with the "coloring disable bit" set. Through this disclosure, it would have been obvious to a POSITA that there may be other situations where operations based on BSS color should not be performed and/or should be disallowed. A POSITA also would have readily appreciated and found obvious that, in such situations, the "coloring disable bit" could be used to signal that BSS color is disabled and, therefore, other operations based on BSS color should not be performed. *Id.*

106. Stacey discloses performing several processes—including NAV setting, power save mode, and spatial reuse—based on BSS color. SAMSUNG 1006, 37, 49, 51-52. Stacey also indicates that an AP selects from a finite number

of BSS color values. SAMSUNG-1006, 51 ("An HE AP shall select a value in the range 1 to TBD to include in the BSS Color subfield…."). A POSITA would therefore have found obvious that an AP may incidentally select the same BSS color as another AP, leading to a BSS color collision. It would have also been obvious to a POSITA that, in such a situation, operations that are normally based on BSS color—including NAV setting, power save operations, and spatial reuse operations—should not be performed (at least not using BSS color). Thus, a POSITA would have been motivated to combine the BSS color-based operations in Stacey with Lee's "coloring disable bit" such that, upon an AP's recognition of a BSS color collision, the AP can signal to STAs in the BSS that operations based on BSS color are disabled and/or disallowed. A POSITA would have understood that this combination offers several benefits, including (1) effective channel contention/conflict handling capability through Lee's coloring disable bit, (2) channel access optimization through minimization of channel contention/conflict, and (3) improved power efficiency through Stacey's power save mechanism. Such benefits would have provided additional motivation to combine Lee and Stacey.

107. In addition, a POSITA would have been motivated to search for—and combine Lee with—references describing the 802.11ax standard amendment, which is expressly referenced in Lee. SAMSUNG-1005, ¶[0004]. While Lee focuses on CCA operations, a POSITA would have appreciated that Stacey, being

a draft of the 802.11ax standard amendment, includes standard implementation details and describes other operations that may naturally combine with Lee's coloring disable bit. For instance, as described above, a POSITA would have understood the 802.11ax standard amendment uses BSS color for various operations, and would have naturally looked to references like Stacey that detail such BSS color-based operations.

108. A POSITA attempting to combine Lee and Stacey in this manner would have enjoyed a reasonable expectation of success. A POSITA would have appreciated the technical overlap among the references—both relate to IEEE 802.11 standards development and, as a result, a POSITA would have appreciated that the two references could be seamlessly integrated. A POSITA would have found the Lee-Stacey combination to be the mere combination of prior art elements (*i.e.*, Lee's coloring disable bit and Stacey's BSS color-based operations) according to known methods to yield predictable results (*i.e.*, not performing BSS color-based operations when the coloring disable bit indicates that such operations should not be performed). *KSR Intern. Co. v. Teleflex Inc.*, 550 U.S. 398, 401 (2007). A POSITA would have further found this combination to be the application of a known technique (*i.e.*, Lee's coloring disable bit) to a known device or method (*i.e.*, the BSS color-based operations performed by the device described in Stacey) to yield predictable results. *See KSR*, 550 U.S. at 401. For at

least these reasons, a POSITA would have found the Lee-Stacey combination obvious. *See KSR*, 550 U.S. at 421.

109. In operation, the resulting Lee-Stacey device ("LSD") receives frames that include both a BSS color and a coloring disable bit. Under normal operation, the LSD performs inter-/intra-BSS NAV setting, power save operations, and spatial reuse operations based on BSS color. However, when the LSD receives a frame whereby the coloring disable bit indicates that operations based on BSS color are not allowed, the LSD does not perform inter-/intra-BSS NAV setting, power save operations (e.g., entering a doze state until the end of a received intra-BSS PPDU), or spatial reuse operations using BSS color.

B. Analysis

[2.1] The wireless communication terminal of claim 1, wherein the processor is configured not to set an Intra-BSS Network Allocation Vector (NAV) by using the BSS color indicated by a signaling field of the PPDU when the signaling information indicates that the operation based on the BSS color is not allowed,

110. The LSD renders [2.1] obvious. In Stacey, "[t]he BSS color is an identifier of the BSS" and is used to classify a PPDU as either an inter- or intra-BSS PPDU. SAMSUNG-1006, 51; *see also id.*, 26, 48. Stacey further provides that the intra-BSS NAV is updated based on an intra-BSS PPDU. *Id.*, 39 ("A STA that receives a valid HE-SIG-A in a HE PPDU and identifies the HE-SIG-A as Intra-BSS can update its Intra-BSS NAV….").

111. Thus, under normal operation, the LSD sets its intra-BSS NAV using

the BSS color indicated by the signaling field of the PPDU. SAMSUNG-1006, 26, 39, 48, 51. However, when the LSD receives a frame whereby the coloring disable bit (i.e., signaling information as described by Lee) indicates that operations based on BSS color are not allowed, the LSD does not update its intra-BSS NAV using the BSS color indicated by a signaling field of the PPDU..

[2.2] wherein the Intra-BSS NAV is different from a Basic NAV and is a NAV which is set based on an Intra-BSS PPDU,

112. The LSD renders [2.2] obvious. Stacey explains that "[f]or the two NAVs maintained by a HE STA, one is identified as Intra-BSS NAV, and the second one is identified as regular NAV." SAMSUNG-1006, 39. Stacey discloses that the "Intra-BSS NAV" is updated based on an intra-BSS PPDU. *Id.* ("A STA that receives a valid HE-SIG-A in a HE PPDU and identifies the HE-SIG-A as Intra-BSS can update its Intra-BSS NAV with the information from the TXOP Duration field in the HE-SIG-A."). Moreover, the '597 patent explains that the claimed "Basic NAV" is updated based on an inter-BSS PPDU or a PPDU that cannot be identified as an intra- or inter-BSS PPDU. SAMSUNG-1001, 14:29-37, cl. 1. Stacey's regular NAV is similarly set based on an inter-BSS PPDU or a PPDU that cannot be identified as an intra- or inter-BSS PPDU and, therefore, a POSITA would have understood or found obvious that Stacey's regular NAV is the claimed "Basic NAV." SAMSUNG-1006, 39.

113. Thus, the LSD maintains two different NAVs—an intra-BSS NAV

and a regular NAV (i.e., Basic NAV). The LSD's intra-BSS NAV is different from its regular NAV and is set based on an intra-BSS PPDU.

[2.3] wherein the Basic NAV is set based on an Inter-BSS PPDU or a PPDU which is not able to be identified as the Inter-BSS PPDU or the Intra-BSS PPDU.

114. The LSD renders [2.3] obvious. Stacey provides that the regular NAV (*i.e.*, the Basic NAV) is set based on an inter-BSS PPDU. SAMSUNG-1006, 39 ("A STA that receives a valid HE-SIG-A in a HE PPDU and identifies the HE-SIG-A as Inter-BSS can update its regular NAV with the information from the TXOP Duration field in the HE-SIG-A."). The regular NAV (*i.e.*, the Basic NAV) is also updated based on a PSDU frame that cannot be identified as either intra- or inter-BSS. *Id*. ("A STA that receives at least one valid frame in a PSDU and ***cannot identify the frame as Intra-BSS or Inter-BSS*** can update its regular NAV with the information from any valid Duration field in the PSDU." (emphasis added)). A POSITA would have understood that a PSDU is a subcomponent of a PPDU—the PSDU is the PPDU's payload and contains data that is eventually decoded by the MAC layer. SAMSUNG-1013, 7:63-67 ("Note that a PPDU corresponds to a physical frame containing a PHY Preamble and a PHY Header and PSDU…."). Thus, a POSITA would have understood or found obvious that Stacey's regular NAV (*i.e.*, Basic NAV) is set based on an inter-BSS PPDU or a PPDU (containing a PSDU) that cannot be identified as either inter-BSS or intra-BSS.

115. The LSD therefore maintains the regular NAV (i.e., the Basic NAV) separately from the intra-BSS NAV, with the regular NAV being set based on inter-BSS PPDUs and/or PPDUs that cannot be identified as inter- or intra-BSS PPDUs.

[3.1] The wireless communication terminal of claim 2, wherein the PPDU includes a TXOP Duration field in the signaling field of the PPDU and a medium access control (MAC) frame which includes a duration field,

116. The LSD renders [3.1] obvious. In Stacey, the NAV is set based on a PPDU that includes a TXOP Duration field. SAMSUNG-1006, 39 ("A STA that receives a valid HE-SIG-A in a HE PPDU and identifies the HE-SIG-A as Intra-BSS can update its Intra-BSS NAV with the information from the ***TXOP Duration field*** in the HE-SIG-A." (emphasis added)). Stacey also explains that the NAV can be set based on "any valid Duration field in the PSDU" when the STA "receives at least one valid frame in a PSDU." *Id*. A POSITA would have understood or found obvious that a PSDU contains one or more MAC Protocol Data Units ("MPDUs"), otherwise known as MAC frames. SAMSUNG-1012, 1:49-53 ("IEEE 802.11 defines a data unit processed in the MAC layer, as a MAC protocol data unit (MPDU). When the MPDU is transferred from the MAC layer to the PHY layer, it is called a PHY service data unit (PSDU)."); SAMSUNG-1013, 7:63-67 ("[A] PPDU corresponds to a physical frame containing a PHY Preamble and a PHY Header and PSDU (including multiple MPDUs), and an MPDU corresponds to a

MAC frame…."); SAMSUNG-1014, 3:64-66 ("The PPDU may include a payload, i.e., the MAC frame or PDU (MPDU), in conjunction with a delimiter of preamble and frame control information."). A POSITA would have thus understood or found obvious that Stacey's "valid frame in a PSDU" with a "valid duration field" is a valid MAC frame. SAMSUNG-1006, 39.

117. Therefore, the LSD operates on a PPDU that includes (1) a TXOP Duration field in the HE-SIG-A (*i.e.*, the signaling field) of the PPDU, and (2) a MAC frame including a valid duration field.

[3.2] wherein the TXOP Duration field indicates information used for setting the Intra-BSS NAV and the Basic NAV,

118. The LSD renders [3.2] obvious. Stacey discloses that a STA that receives a PPDU and identifies the PPDU as an intra-BSS PPDU "can update its Intra-BSS NAV with the information from the TXOP Duration field in the HE-SIG-A." SAMSUNG-1006, 39. Similarly, Stacey discloses that a STA that receives a PPDU and identifies the PPDU as an inter-BSS PPDU "can update its regular NAV with the information from the TXOP Duration field in the HE-SIG-A." *Id*. Thus, in the context of the LSD, the TXOP Duration field indicates information used for setting the intra-BSS NAV and the regular NAV (*i.e.*, the Basic NAV).

[3.3] wherein the duration field indicates information used for setting the Intra-BSS NAV and the Basic NAV,

119. The LSD renders [3.3] obvious. Stacey discloses that a STA that receives a valid frame in a PSDU (*i.e.*, a MAC frame) and identifies the frame as an intra-BSS frame, "can update its Intra-BSS NAV with the information from any valid Duration field in the PSDU." SAMSUNG-1006, 39. Similarly, Stacey discloses that a STA that receives a valid frame in a PSDU (*i.e.*, a MAC frame) and identifies the frame as an inter-BSS frame, "can update its regular NAV with the information from any valid Duration field in the PSDU." *Id*. Thus, in the context of the LSD, the Duration field of the MAC frame indicates information used for setting the intra-BSS NAV and the regular NAV (*i.e.*, the Basic NAV).

[3.4] wherein the processor is configured not to use the TXOP Duration field for setting the Intra-BSS NAV or the Basic NAV when the wireless communication terminal gets a valid signaling field of the MAC frame.

120. The LSD renders [3.4] obvious. Stacey states that "[w]hen a STA receives both a valid HE-SIG-A in a HE PPDU and a valid frame in the PSDU of the HE PPDU, the STA shall not update its Intra-BSS NAV or regular NAV with the information from the TXOP Duration field in the HE-SIG-A." SAMSUNG-1006, 39. Thus, the LSD does not use the TXOP Duration field for setting the intra-BSS NAV or the regular NAV (*i.e.*, the Basic NAV) when it receives a valid frame in the PSDU (*i.e.*, a valid MAC frame).

[6.1] The wireless communication terminal of claim 1, wherein the operation based on the BSS color includes entering a doze state of a power save operation based on a BSS color indicated by a signal-ing field of the PPDU,

121. The LSD renders [6.1] obvious. In Stacey, a STA "in intra-PPDU power save mode may enter the doze state until the end of a received PPDU" when, among other conditions, "[t]he value of the RXVECTOR parameter BSS_COLOR [is] equal to the BSS color of the BSS with which the STA is associated." SAMSUNG-1006, 51-52. Thus, under normal operation, the LSD enters a doze state of a power save operation based on the BSS color indicated by a signaling field of the PPDU. SAMSUNG-1006, 51-52. However, when the LSD receives a frame whereby the coloring disable bit (as described by Lee) indicates that operations based on BSS color are not allowed, the LSD does not enter a doze state of a power save operation based on the BSS color indicated by a signaling field of the PPDU.

[6.2] wherein the power save operation is an operation for the wireless communication terminal to enter the doze state until an end of a received PPDU which is an Intra-BSS PPDU.

122. The LSD renders [6.2] obvious. As explained with reference to [6.1], Stacey states that a STA "in intra-PPDU power save mode may enter the doze state until the end of a received PPDU" when, among other conditions, "[t]he value of the RXVECTOR parameter BSS_COLOR [is] equal to the BSS color of the BSS with which the STA is associated." SAMSUNG-1006, 51-52. In other words,

Stacey requires that a received PPDU be an intra-BSS PPDU—as determined using BSS color—for a STA to enter a doze state. Thus, under normal operation, the LSD performs a power save operation whereby it enters a doze state until the end of a received intra-BSS PPDU.

[10.1] The method of claim 9, wherein the method further comprises not setting an Intra-BSS Network Allocation Vector (NAV) by using the BSS color indicated by a signaling field of the PPDU when the signaling information indicates that the operation based on the BSS color is not allowed,

123. The LSD renders [10.1] obvious. Under normal operation, the LSD sets its intra-BSS NAV using the BSS color indicated by the signaling field of the PPDU. §XI.B.[2.1]. However, when the LSD receives a frame whereby the coloring disable bit (*i.e.*, signaling information as described by Lee) indicates that operations based on BSS color are not allowed, the LSD does not update its intra-BSS NAV using the BSS color indicated by a signaling field of the PPDU. *Id*.

[10.2] wherein the Intra-BSS NAV is different from a Basic NAV and is a NAV which is set based on an Intra-BSS PPDU,

124. The LSD renders [10.2] obvious. The LSD operates two NAVs—an intra-BSS NAV and a regular NAV (*i.e.*, a Basic NAV). §XI.B.[2.2]. The LSD's intra-BSS NAV is different from the regular NAV and is set based on an intra-BSS PPDU. *Id*.

[10.3] wherein the Basic NAV is set based on an Inter-BSS PPDU or a PPDU which is not able to be identified as the Inter-BSS PPDU or the Intra-BSS PPDU.

125. The LSD renders [10.3] obvious. The LSD sets its regular NAV (*i.e.*,

its Basic NAV) based on an inter-BSS PPDU or a PPDU that is not able to be identified as an inter- or intra-BSS PPDU. §XI.B.[2.3].

[11.1] The method of claim 10, wherein the PPDU includes a TXOP Duration field in the signaling field of the PPDU and a medium ac-cess control (MAC) frame which includes a duration field,

126. The LSD renders [11.1] obvious. The LSD receives a PPDU that includes a TXOP Duration field in the HE-SIG-A field (*i.e.*, in a signaling field). §XI.B.[3.1]. The PPDU received by the LSD also includes a duration field in the PSDU (*i.e.*, in a MAC frame). *Id*.

[11.2] wherein the TXOP Duration field indicates information used for setting the Intra-BSS NAV and the Basic NAV,

127. The LSD renders [11.2] obvious. The LSD uses information in the TXOP Duration field of a received PPDU to set both the intra-BSS NAV and the regular NAV (*i.e.*, the Basic NAV). §XI.B.[3.2].

[11.3] wherein the duration field indicates information used for setting the Intra-BSS NAV and the Basic NAV,

128. The LSD renders [11.3] obvious. The LSD uses information in the Duration field of the PSDU (*i.e.*, the MAC frame) to set both the intra-BSS NAV and the regular NAV (*i.e.*, the Basic NAV). §XI.B.[3.3].

[11.4] wherein the method further comprises not using the TXOP Duration field for setting the Intra-BSS NAV or the Basic NAV when the wireless communication terminal gets a valid signaling field of the MAC frame.

129. The LSD renders [11.4] obvious. The LSD does not set the intra-BSS NAV or the regular NAV (*i.e.*, the Basic NAV) using the TXOP Duration field

when it receives a valid frame in the PSDU (*i.e.*, a valid MAC frame). §XI.B.[3.4].

[14.1] The method of claim 9, wherein the operation based on the BSS color includes entering a doze state of a power save operation based on a BSS color indicated by the signaling field of the PPDU,

130. The LSD renders [14.1] obvious. Under normal operation, the LSD enters a doze state of a power save operation based on a BSS color indicated by the signaling field of a PPDU. §XI.B.[6.1]. When the LSD receives a frame whereby the coloring disable bit (as described by Lee) indicates that operations based on BSS color are not allowed, the LSD does not enter a doze state of a power save operation based on the BSS color indicated by a signaling field of the PPDU. *Id*.

[14.2] wherein the power save operation is an operation for the wireless communication terminal to enter the doze state until an end of a received PPDU which is an Intra-BSS PPDU.

131. The LSD renders [14.2] obvious. Under normal operation, the LSD performs a power save operation whereby it enters a doze state until the end of a received intra-BSS PPDU. §XI.B.[6.2]; SAMSUNG-1006, 51-52.

XII. Ground 1C: Lee-Zhou renders claims 4-5 and 12-13 obvious

A. Lee-Zhou combination

132. Lee provides a method of performing a spatial reuse operation (*i.e.*, CCA level change) based on BSS color. SAMSUNG-1005, Abstract, [0007], [0067]. Lee further discloses a "coloring disable bit" that, along with the BSS color, may be included in the HE-SIG field of the PPDU. *Id*., [0017], [0068]. In Lee, when a device receives a frame and the "coloring disable bit" indicates the

frame is a trigger frame, the device does not perform the CCA level change procedure regardless of BSS color. *Id*. According to Lee, CCA level change should not be performed based on a trigger frame received from an AP because this may result in the receiving device interfering with transmission of trigger-based PPDUs by other STAs in the BSS (*i.e.*, PPDUs sent by other STAs in response to the trigger frame sent by the AP). *Id*., [0069].

133. Lee recognizes that, in certain situations, BSS color-based operations should not be performed; namely, CCA level change should not be performed when the STA receives a trigger frame with the "coloring disable bit" set. From Lee's disclosure, a POSITA would have further understood or found obvious that there may be other situations where BSS color-based operations should not be performed. A POSITA would have appreciated the value in having STAs detect and signal such situations, and would have been motivated to search for and combine Lee with references that describe such functionality.

134. Zhou discloses a STA that detects a color collision—which is where two BSSs incidentally operate using the same BSS color—and reports the color collision to an AP. SAMSUNG-1007, [0005], [0070]-[0071]; SAMSUNG-1008, [0004], [0071]-[0072]. A color collision may be recognized by comparing the MAC addresses of two received frames with identical color values. SAMSUNG-1007, [0070]; SAMSUNG-1008, [0071]. The "collision report" may be a single bit

transmitted by the STA. SAMSUNG-1007, [0071]; SAMSUNG-1008, [0072]. Zhou further discloses that, in response to a collision report, an AP may prevent STAs from transmitting until a color change occurs. SAMSUNG-1007, [0063], [0081]; SAMSUNG-1008, [0064], [0082]. A POSITA would have understood or found obvious that a BSS color collision interferes with operations—including NAV setting, power save operations, and spatial reuse operations—that depend on BSS color-based PPDU classification. But a POSITA would also have known or found obvious that PPDU classification can be performed using other identifiers that are unaffected by BSS color collisions, including MAC address. As such, a POSITA would have recognized that it may be preferable to simply signal that operations normally based on BSS color (*e.g.*, NAV setting, power save operations, and spatial reuse operations) should not be performed using BSS color—as opposed to preventing STAs from transmitting altogether. Thus, a POSITA would have been motivated to combine the teachings of Lee and Zhou such that the resulting device can (1) receive a "coloring disable bit" indicating that operations based on BSS color are not allowed, (2) recognize a BSS color collision, and (3) transmit a collision report indicating that operations based on BSS color are not allowed.

135. In addition, a POSITA would have been motivated to search for—and combine Lee with—references describing the 802.11 standard, which is expressly

referenced in Lee. SAMSUNG-1005, ¶¶[0003]-[0004]. Zhou explains that its STAs and APs "may communicate according to the WLAN radio and baseband protocol for physical (PHY) and medium access control (MAC) layers from IEEE 802.11 and versions including, but not limited to, 802.11b, 802.11g, 802.11a, 802.11n, 802.11ac, 802.11ad, 802.11ah, etc." SAMSUNG-1007, ¶[0047]; SAMSUNG-1008, ¶[0049]. While Lee focuses on CCA operations, a POSITA would have appreciated that Zhou may include 802.11 standard implementation details or additional features, like its BSS color collision detection and reporting functionality, that may naturally combine with Lee's coloring disable bit.

136. A POSITA attempting to combine Lee and Zhou in this manner would have enjoyed a reasonable expectation of success. A POSITA would have found the Lee-Zhou combination to be the mere combination of prior art elements (*i.e.*, Lee's coloring disable bit and Zhou's BSS color collision recognition and reporting functionality) according to known methods to yield predictable results (*i.e.*, a device that can (1) receive a "coloring disable bit," (2) recognize a BSS color collision, and (3) transmit a collision report). *KSR*, 550 U.S. at 401. A POSITA would have further found this combination to be the application of a known technique (*i.e.*, Zhou's BSS color collision detection and reporting functionality) to a known device or method (*i.e.*, the Lee device, which receives a coloring disable bit) to yield predictable results. *See KSR*, 550 U.S. at 401. For at least these

reasons, a POSITA would have found the Lee-Zhou combination obvious. *See KSR*, 550 U.S. at 421.

137. In operation, the Lee-Zhou device ("LZD") receives frames that include both a BSS color and a coloring disable bit in the HE-SIG field. When the LZD receives a frame whereby the coloring disable bit indicates that operations based on BSS color are not allowed—for instance, due to an AP's or another STA's recognition of a color collision—the LZD does not use BSS color to perform those operations. Moreover, the LZD is capable of recognizing a color collision by receiving two frames with identical color values, decoding and comparing the frames' MAC addresses, and determining based on the MAC addresses that the frames are from different BSSs. When the LZD recognizes a color collision, it sends a single-bit "collision report" to the AP, which indicates that other STAs in the BSS should not perform operations based on BSS color.

B. Analysis

[4.1] The wireless communication terminal of claim 1, wherein the processor is configured to signal that the operation based on the BSS color is not allowed when the wireless communication terminal recognizes that a BSS color collision has occurred,

138. The LZD renders [4.1] obvious. In Zhou, a device can "detect that two BSSs are associated with a color collision…." SAMSUNG-1007, [0005]; SAMSUNG-1008, [0004]. Zhou provides that, upon detection of a collision, the device can send a single-bit collision report to an AP. SAMSUNG-1007, [0071];

SAMSUNG-1008, [0072]. The LZD thus uses the single-bit collision report to signal that operations based on BSS color are not allowed when it recognizes that a BSS color collision has occurred.

[4.2] wherein the BSS color collision represents that different BSSs correspond to one BSS color.

139. The LZD renders [4.2] obvious. In Zhou, a "color collision" is when "two BSSs are using the same color bits…." SAMSUNG-1007, [0005]; SAMSUNG-1008, [0004]. Thus, in the context of the LZD, a BSS color collision represents that different BSSs correspond to one BSS color.

[5] The wireless communication terminal of claim 4, wherein the processor is configured to determine that BSS color collision has occurred based on address fields of a medium access control (MAC) frame.

140. The LZD renders [5] obvious. In Zhou, a device can detect a color collision by "receiv[ing] frames … that have identical color values" and "comparing the MAC addresses" of two received frames to "determine that the frames are from different BSSs." SAMSUNG-1007, [0070]; SAMSUNG-1008, [0071]. Thus, the LZD determines that a BSS color collision has occurred based on MAC addresses (*i.e.*, address fields of a MAC frame).

[12.1] The method of claim 9, wherein the method further comprises signal that the operation based on the BSS color is not allowed when the wireless communication terminal recognizes that a BSS color collision has occurred,

141. The LZD renders [12.1] obvious. The LZD uses the single-bit collision report to signal that operations based on BSS color are not allowed when

it recognizes that a BSS color collision has occurred. *Supra* §XII.B.[4.1].

[12.2] wherein the BSS color collision represents that different BSSs correspond to one BSS color.

142. The LZD renders [12.2] obvious. In the context of the LZD, a BSS color collision represents that different BSSs correspond to one BSS color. *Supra* §XII.B.[4.2].

[13] The method of claim 12, wherein the signaling that a BSS color collision has occurred comprises determining that BSS color collision has occurred based on address fields of a medium access control (MAC) frame.

143. The LZD renders [13] obvious. The LZD determines that a BSS color collision has occurred based on MAC addresses (*i.e.*, address fields of a MAC frame). *Supra* §XII.B.[5].

XIII. Ground 1D: Lee-Choudhury renders claims 7-8 and 15-16 obvious

A. Lee-Choudhury combination

144. Lee provides a method of performing a CCA level change based on BSS color, which may be included in the HE-SIG field of a PPDU. SAMSUNG-1005, Abstract, [0007], [0017], [0067]. Lee further discloses a "coloring disable bit." *Id*., [0068]. According to Lee, when a device receives a frame and the "coloring disable bit" indicates the frame is a trigger frame, the device does not perform the CCA level change procedure regardless of BSS color. *Id*. Lee also discloses that the device "may use a reserved field of a legacy BSS coloring bit … field without separately defining a coloring disable bit." *Id*., [0075]. Based on this

disclosure, a POSITA would have understood or found obvious that Lee's "coloring disable bit" can be implemented using the legacy BSS color field such that when the legacy BSS color field is set to a predetermined value, the device does not perform a CCA level change.

145. Because Lee does not disclose the predetermined value that should be used to implement the coloring disable bit in the legacy BSS color field, a POSITA would have looked to similar art—like Choudhury—for guidance on implementation options. Choudhury describes a STA that determines whether to reuse a wireless channel based on BSS color. SAMSUNG-1009, [0025]. In Choudhury, when the STA receives information indicating that another device is experiencing high interference, the STA could be "required to defer channel access." *Id.*, [0029]. Devices may signal a high interference state through either a designated bit or by using the COLOR field (e.g., setting it to "0000"). *Id.*, [0026], [0029]. A POSITA would have understood or found obvious the benefit of using the COLOR field, as opposed to a designated bit, to signal a high interference state or that BSS color is disabled—specifically, doing so requires less bandwidth and improves communication efficiency.

146. A POSITA reading Choudhury would have appreciated the benefits of using a value of zero as the predetermined BSS color value. For instance, a POSITA would have understood that using a value at the extremes of the possible

BSS color range as the predetermined value—*i.e.*, zero or the maximum possible value—is preferable to choosing a value in the middle of the possible BSS color range as it simplifies implementation. A POSITA would have further understood that choosing zero as the predetermined value is preferable to choosing the maximum possible BSS color value because, for instance, future wireless systems may comprise larger BSS color fields. Thus, a POSITA would have been motivated to combine Choudhury's use of a predetermined BSS color value of zero with Lee's coloring bit to signal that BSS color is disabled.

147. A POSITA attempting to combine Lee and Choudhury in this manner would have enjoyed a reasonable expectation of success. A POSITA would have found the Lee-Choudhury combination to be the mere combination of prior art elements (*i.e.*, Lee's coloring bit and Choudhury's use of a predetermined value of zero) according to known methods to yield predictable results (*i.e.*, a device that does not perform a CCA level change when it receives a coloring bit set to zero). *KSR*, 550 U.S. at 401. A POSITA would have further found this combination to be the application of a known technique (*i.e.*, Choudhury's use of a predetermined value of zero) to a known device or method (*i.e.*, the device described in Lee) to yield predictable results. *KSR*, 550 U.S. at 401. For at least these reasons, a POSITA would have found the Lee-Choudhury combination obvious. *See KSR*, 550 U.S. at 421.

148. Moreover, a POSITA would have found the Lee-Choudhury combination obvious to try. Both Lee and Choudhury describe a finite set of options to signal that a spatial reuse operation—CCA level change in Lee and channel reuse in Choudhury—should not be performed. Specifically, a designated field (*i.e.*, the coloring disabled bit in Lee and the Low Power/High Interference Indicator in Choudhury) or the legacy BSS color field may be used. The legacy BSS color field has a finite set of values, and use of the value zero was known and described in Choudhury. Thus, it would have been obvious for a POSITA to try implementing Lee's coloring disable signaling function using a predetermined value of zero in the BSS color field.

149. In operation, the Lee-Choudhury Device ("LCD") receives a frame that includes a coloring bit in the HE-SIG field. When the device receives a frame with a predetermined coloring bit value of zero, the device does not perform a CCA level change.

B. Analysis

[7] The wireless communication terminal of claim 1, wherein the processor is configured not to perform a spatial reuse operation when the BSS color indicated by a signaling field of the PPDU is a predetermined value.

150. The LCD renders [7] obvious. In Lee, CCA (*i.e.*, a spatial reuse operation) is not performed when the coloring disable bit indicates a received frame is a trigger frame related to multi-user transmission. §X.A.[1.4]; §X.A.[7].

The value of Lee's coloring bit is the BSS color indicated by the signaling field of the PPDU. §X.A.[1.4]. Lee further describes that its system, "may use a reserved field of a legacy BSS coloring bit … field without separately defining a coloring disable bit." SAMSUNG-1005, [0075].

151. Choudhury similarly describes that a "reserved value" of zero for the COLOR field may be used to signal that an operation based on BSS color is not allowed. SAMSUNG-1009, [0029]. Specifically, Choudhury discloses that when a device decodes a value of "0000" in the COLOR field of a received transmission, the device "could be required to defer channel access." SAMSUNG-1009, [0029]. A POSITA would have understood or found obvious that this deferral of channel access means the receiving device does not reuse the wireless channel, which constitutes not performing a spatial reuse operation. SAMSUNG-1009, [0025], [0009].

152. The LCD is thus configured not to perform a CCA level change (*i.e.*, a spatial reuse operation) when the coloring bit is set to zero (*i.e.*, the BSS color indicated by a signaling field of the PPDU is a predetermined value).

[8] The wireless communication terminal of claim 7, wherein the predetermined value is 0.

153. The LCD renders [8] obvious. Lee teaches a device that is configured not to perform CCA level change (*i.e.*, a spatial reuse operation) when the legacy BSS coloring bit is set to a predetermined value. § X.A.[7]. Choudhury discloses

that a device that receives a frame with a BSS color of zero is required to defer channel access (*i.e.*, not reuse the wireless channel). SAMSUNG-1009, [0029]. The LCD is therefore configured not to perform a CCA level change (*i.e.*, a spatial reuse operation) when the legacy BSS coloring bit is set to a predetermined value of zero. *See* SAMSUNG-1016, [0145]-[0149] ("COLOR field may be set to a specific value such as 0"), [0199].

[15] The method of claim 9, wherein the method further comprises not performing a spatial reuse operation when the BSS color indicated by a signaling field of the PPDU is a predetermined value.

154. The LCD renders [15] obvious. The LCD is configured not to perform a CCA level change (*i.e.*, a spatial reuse operation) when the coloring bit is set to zero (*i.e.*, the BSS color indicated by a signaling field of the PPDU is a predetermined value). §XIII.B.[7].

[16] The method of claim 15, wherein the predetermined value is 0.

155. The LCD renders [16] obvious. The LCD is configured not to perform a CCA level change (*i.e.*, a spatial reuse operation) when the legacy BSS coloring bit is set to a predetermined value of zero. §XIII.B.[8].

XIV. Ground 2A: Choudhury renders claims 1, 7, 8, 9, 15, and 16 obvious

A. Analysis

[1.1] A wireless communication terminal communicating wirelessly, the wireless communication terminal comprising:

156. To the extent the preamble is limiting, Choudhury renders obvious

[1.1]. For example, Choudhury discloses wireless communication terminals through its teaching of "**wireless networking stations**" (STAs) operating in basic service set (BSS) architectures, which communicate wirelessly to perform channel access determinations. SAMSUNG-1009, [0003] (emphasis added). Specifically, Choudhury teaches that wireless networking stations are part of a system that facilitates communication within a wireless network. *Id. See also id.*, [0002]. [0018], [0020], [0030], Abstract, FIGs. 2, 5.

157. Further, Choudhury describes "systems and techniques for establishing channel sharing criteria in wireless local area networks." SAMSUNG-1009, [0001]. In FIG. 1, Choudhury illustrates "a heterogeneous **wireless** network environment 100 comprising APs 102A and 102B serving networks 104A and 104B, respectively." SAMSUNG-1009, [0020] (emphasis added), FIG. 1. Both networks 104A and 104B include wireless STAs 106A-106C and 106D-106F, which are wireless communication terminals. SAMSUNG-1009, [0020]. Additionally, Choudhury discloses that these STAs are capable of conducting "bidirectional wireless communications." SAMSUNG-1009, [0037]-[0038].

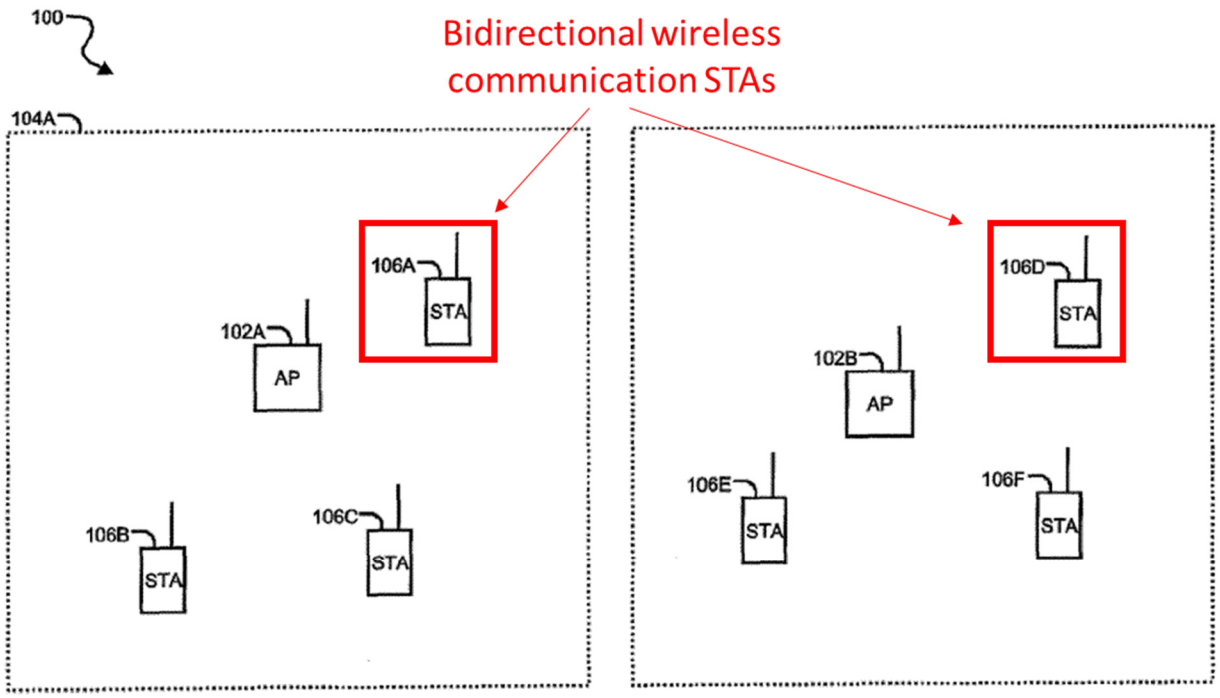

Fig. 1

SAMSUNG-1009, FIG. 1 (annotated).

158. A POSITA would have understood or found obvious that the wireless STAs described in Choudhury function as wireless communication terminals capable of bidirectional wireless communication. SAMSUNG-1009, [0004], [0037]-[0038] ("bidirectional wireless communications"); *see also id.*, [0030] ("[O]ne or more **wireless network** APs and **STAs are configured to transmit** and to recognize a signal field."), FIG. 2 (referring to figure element 202).

[1.2] a transceiver; and

159. Choudhury renders obvious [1.2]. As discussed above (supra §XIV.A.[1.1]), Choudhury discloses wireless networking stations that include both

transmitting and receiving functionalities, which perform bidirectional communication within a Basic Service Set (BSS). Specifically, Choudhury describes "transmitting wireless networking station[s]" and "monitoring wireless networking station[s]," both of which include a transmitter and a receiver to enable bidirectional communication. SAMSUNG-1009, [0003]-[0004].

160. A POSITA would have understood or found obvious that devices designed for bidirectional wireless communication include a transceiver, which integrates both a transmitter and a receiver. Choudhury discloses this functionality by describing its wireless networking stations as having a "communicating means such as a transmitter TX 562 and a receiver RX 564 for bidirectional wireless communications." SAMSUNG-1009, [0038], FIG. 5 (annotated). Additionally, the ability of these stations to receive COLOR field information and decode transmission parameters further suggest the inclusion of transceiver functionality. SAMSUNG-1009, [0025], [0029].

161. Therefore, based on Choudhury's disclosure, a POSITA would have recognized or found obvious the use of a transmitter and receiver functioning as a transceiver in a wireless communication device, enabling Choudhury's bidirectional wireless communication.

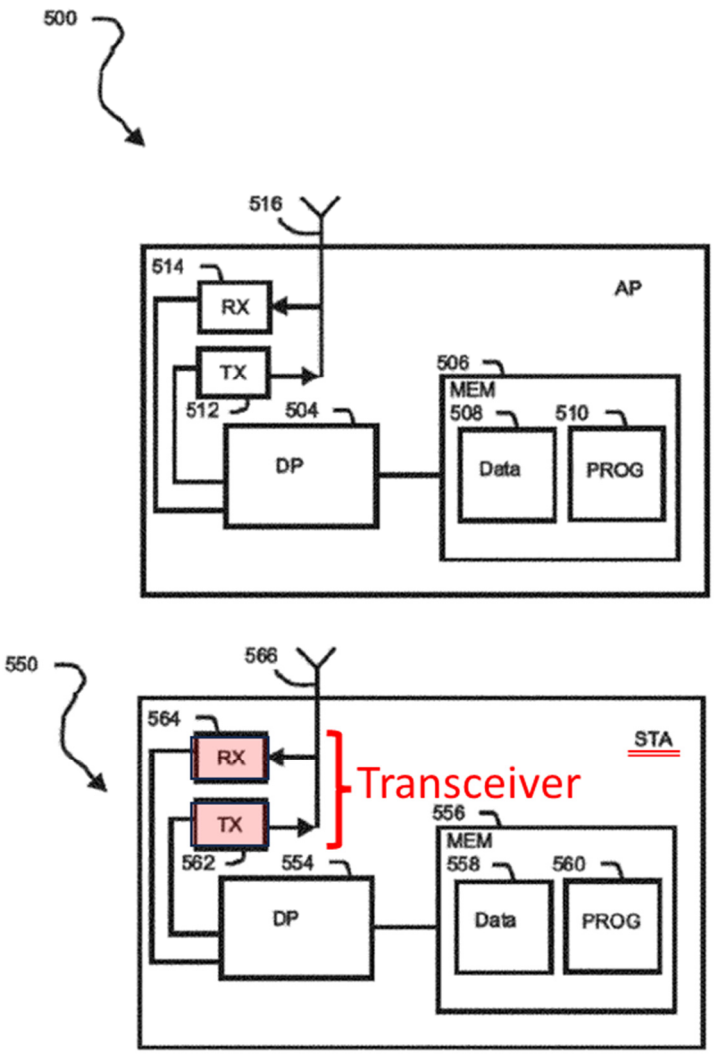

Fig. 5

SAMSUNG-1009, FIG. 5 (annotated). *See also id.*, [0030], FIGs. 2 (referring to figure elements 204 and 206 for "transmitting STA" and "STA…monitoring," respectively.) Further, *see also* SAMSUNG-1005, [0093], FIG. 8; *supra* §X.A.[1.2].

[1.3] a processor,

162. Choudhury renders obvious [1.3]. Choudhury discloses that wireless

communication stations include "at least one processor and memory storing a program of instructions," which is for executing operations such as configuring signal fields and determining channel reuse eligibility. SAMSUNG-1009, [0003]. *See also id.*, [0004]-[0006]. A POSITA would have recognized or found obvious that these decision-making processes, including decoding COLOR fields and modifying channel access behavior, would use programmable processing capabilities. SAMSUNG, [0029].

163. In addition, Choudhury's FIG. 5 illustrates that the wireless communication station includes "processing means such as at least one data processor (DP) 554." SAMSUNG-1009, [0037]-[0038], FIG. 5. Choudhury further discloses that DP 554 can be implemented using different types of processors, including general-purpose computers, microprocessors, digital signal processors (DSPs), and multi-core processors, all of which function as the processor. SAMSUNG-1009, [0041].

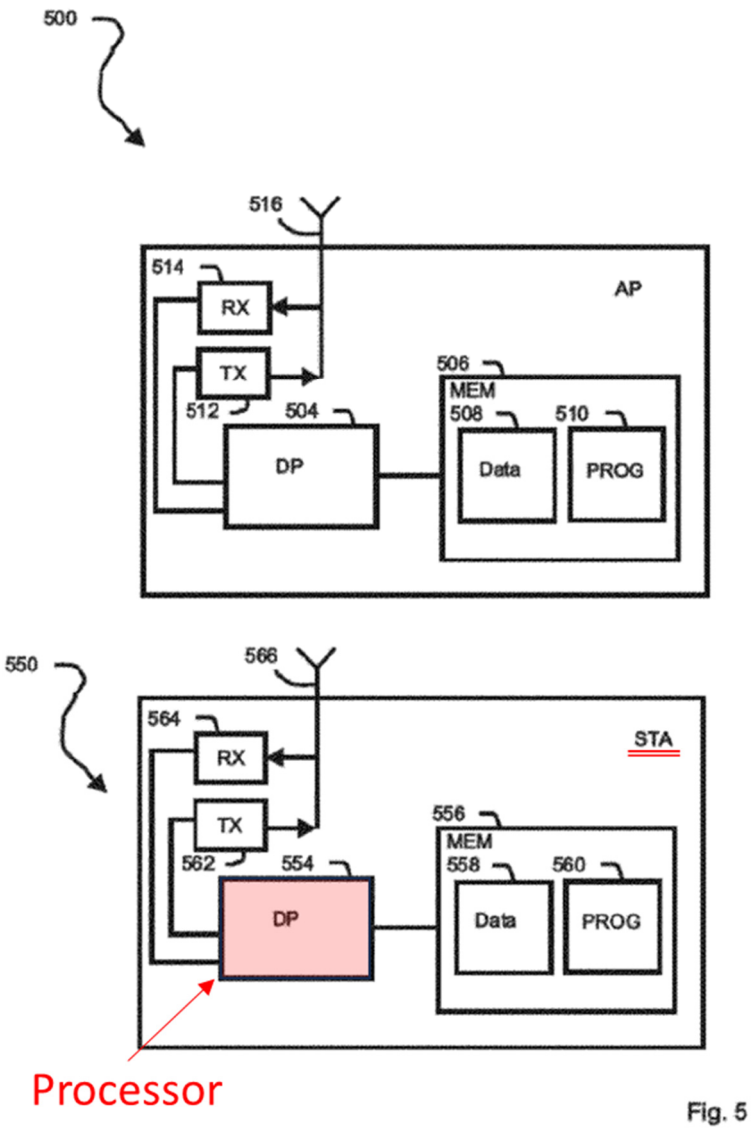

SAMSUNG-1009, FIG. 5 (annotated).

164. Therefore, a POSITA would have found it obvious to include a processor in the wireless communication device as described in Choudhury to enable the operations for bidirectional communication and decision-making. SAMSUNG-1009, [0038].

[1.4] wherein the processor is configured to receive a physical layer convergence procedure (PLCP) Protocol Data Unit (PPDU) by using the transceiver, and not to use a Basic Service Set (BSS) color indicated by the PPDU when signaling information indicates that an operation based on the BSS color is not allowed,

165. Choudhury renders obvious [1.4]. Choudhury discloses that wireless networking stations (STAs) are configured to receive transmissions in a wireless network. SAMSUNG-1009, [0003]-[0004], [0030]. Specifically, Choudhury teaches that STAs have "a receiver RX 564 for bidirectional wireless communications," which functions as part of a transceiver. SAMSUNG-1009, [0038], FIG. 5. These stations include "at least one processor" that processes received signals. SAMSUNG-1009, [0003],[0037]-[0038], [0041]. A POSITA would have understood or found obvious that the processor in Choudhury's STA receives PPDUs using the transceiver, as PPDUs are the standard frame format in IEEE 802.11 networks that Choudhury explicitly addresses. SAMSUNG-1009, [0020]-[0021] ("transmitted PPDU"), [0025], [0027] ("transmitted PPDU"); [0029]-[0030].

166. Choudhury discloses that PPDUs received by the STA contain signaling information that can indicate whether operations based on BSS color should be performed. Choudhury teaches multiple forms of this signaling information, including: (1) a "Low Power/High Interference Indicator" bit, and (2) a reserved COLOR field value. SAMSUNG-1009, [0026], [0029]. The "Low Power/High Interference Indicator" and the COLOR field represent signaling

information because each is located in the "signal field (SIG)" and signal information that a STA uses to react to a received PPDU. *Id.*, [0009], [0020] ("SIG-A"), [0023] ("1-bit indicator in the SIG"), [0026]-[0027], [0029], [0030]-[0031].

167. The "Low Power/High Interference Indicator" or the presence of the reserved value in the COLOR field indicate whether an operation based on the BSS color is not allowed. The table below illustrates operations related to a value of the "Low Power/High Interference Indicator" and the COLOR Field:

COLOR Field	Low Power/High Interference Indicator	Receiving STA
Not used	1	Limit Access
Not used	0	Allow Access
STA in same BSS (that is, same COLOR field as receiving STA	0 or 1	Limit Access
STA in different BSS (different COLOR field from receiving STA)	0	Allow Access
STA in different BSS (different COLOR field from receiving STA)	1	Limit Access

168. The third through fifth rows at the bottom of the table indicate how the STA operates when the COLOR Field is used. As shown in the third row, when the BSS COLOR indicates that the transmitting STA is in the same BSS as the receiving STA, the receiving STA determines that the PPDU is part of an "intra-BSS transmission" and "will not re-use the channel" (i.e., limits access to the channel) because it decoded "a valid SIG field from the same BSS." SAMSUNG-1009, [0025]. In this case, the value of the "Low Power/High

Interference Indicator" does not matter because receiving STAs always limit channel access by not re-using the channel when a transmission is from another station in the same BSS. *Id.*

169. The fourth and fifth rows in the table indicate how receiving STAs operate when the BSS COLOR indicates that the transmitting STA is in a different BSS than the receiving STA. In the fourth row where the BSS COLOR indicates a different BSS and the "Low Power/High Interference Indicator" equals 0, the receiving STA determines that the transmission is "from an OBSS STA" and "use[s] the channel without special restrictions (for example, being allowed to use a higher CCA threshold)" (i.e., allows access to the channel). SAMSUNG-1009, [0025]. By allowing access and re-using the channel when the fourth row conditions are met, the STA performs an operation based on the BSS COLOR.

170. In the fifth row where the BSS COLOR indicates a different BSS and the "Low Power/High Interference Indicator" equals 1, the receiving STA acts differently than when the fourth row conditions are met. Specifically, the receiving STA detects that the "Low Power/High Interference Indicator" equals 1 and, thus, limits channel access by not re-using the channel because it knows that, when the "Low Power/High Interference Indicator" equals 1, "any STA that is able to decode its SIG should not re-use the channel." SAMSUNG-1009, [0026]. With this operation, when the fifth row conditions are met, the receiving STA does not

use BSS COLOR because the "Low Power/High Interference Indicator" indicated that the operation based on BSS COLOR (e.g., allowing access and re-using the channel) is not allowed.

171. For these reasons, the Low Power/High Interference Indicator functions as signaling information that, when set to "1", indicates that devices receiving a transmission from an OBSS STA with the indicator set to 1 are "required to defer channel access," regardless of the BSS color information. SAMSUNG-1009, [0029]. A POSITA would have understood or found obvious that this signaling information indicates that an operation based on BSS color (namely, channel access determination based on BSS identification) is not allowed.

172. As another example, Choudhury teaches that "the COLOR field concept can be generalized to achieve the functionality of both the low power indicator and the COLOR field." SAMSUNG-1009, [0029]. "For example, the first three bits of the COLOR [field] can be used to set the basic service set identification (BSS ID) and the fourth bit can be used as a low power/high interference indicator" or "reserved values may be used for the entire 4-bit field." *Id.* For instance, a STA may use a value of '0000' in the COLOR field to indicate high interference and that devices decoding '0000' are "required to defer channel access." *Id.* In this instance, a POSITA would have understood or found obvious that a COLOR field value of "0000" does not represent a valid BSS identifier, but

rather serves as signaling information that BSS color-based operations should not be performed. When a device receives a PPDU with this reserved value, it cannot use the BSS color for its intended purpose of BSS identification because no valid BSS color has been provided. SAMSUNG-1009, [0025], [0029]. Accordingly, when the COLOR field is set to the reserved value of "0000," it indicates that operations based on BSS COLOR are not allowed and the receiving STA does not use BSS COLOR.

173. Furthermore, Choudhury teaches that "one or more wireless network APs and STAs are configured to transmit and to recognize a signal field" containing this signaling information. SAMSUNG-1009, [0030]. This signal field is processed by the STA's processor to determine whether to perform operations based on BSS color. SAMSUNG-1009, [0030]-[0031]. A POSITA would have found it obvious that the processor in Choudhury's STA is configured to receive PPDUs using the transceiver and, upon detecting either the Low Power/High Interference Indicator or the reserved COLOR value of "0000", not use the BSS color for operations that would normally rely on BSS identification. SAMSUNG-1009, [0020], [0025], [0029]-[0031].

174. Thus, based on Choudhury's teachings, a POSITA would have found it obvious that the processor would be configured to receive the PPDU using the transceiver, and not use the BSS color when the signaling information, such as the

"Low Power/High Interference Indicator" or the COLOR '0000' value, indicates that operations based on the BSS color are not allowed. SAMSUNG-1009, [0020].

[1.5] wherein the BSS color is an identifier of a BSS,

175. Choudhury renders obvious [1.5]. Choudhury teaches that the COLOR field is used to identify the Basic Service Set (BSS) by assigning a unique color to each BSS, thereby enabling STAs to distinguish between different BSSs. Specifically, Choudhury relies on the COLOR field as defined by 802.11ah and explains "the COLOR bit [in the COLOR field] can be used to set the basic service set identification (BSS ID)". SAMSUNG-1009, [0029]. Thus, the COLOR field functions as an identifier for each BSS. *Id.*

176. Further, Choudhury teaches that all STAs within the same BSS set the same COLOR field value, ensuring that STAs are aware of ongoing intra-BSS transmissions. SAMSUNG-1009, [0025]. This ability to identify and distinguish BSSs based on the COLOR field helps avoid interference by preventing transmission overlap in the same BSS. *Id.*

177. Additionally, the IEEE 802.11ah standard, cited by Choudhury, confirms that the COLOR field is used for BSS identification while being utilized within BSSs to facilitate communication and avoid channel reuse in intra-BSS transmissions. SAMSUNG-1009, [0020]-[0021]. The standard elaborates that "each BSS has a different color [field]," which helps STAs identify whether a

transmission is within their own BSS after decoding the SIG field. SAMSUNG-1009, [0021]. A POSITA would have understood that the BSS color serves as an identifier for the BSS. *Id.*

178. Thus, based on the disclosures in Choudhury and the IEEE 802.11ah standard, a POSITA would have recognized that the COLOR field is used to identify the BSS. SAMSUNG-1009, [0020]-[0021]. *See also* SAMSUNG-1009, [0024]-[0030]; SAMSUNG-1016, Abstract ("The PPDU includes an identifier used to assist the device in identifying a basic service set."), [0145]-[0149], [0199], FIG. 26.

> [00145] **A COLOR value is used for identifying the BSS**, and **the number of bits thereof is less than that of a BSSID**. For example, the BSSID may be 48 bits, whereas the COLOR value may be 3 bits. The BSSID has the same format as a MAC address, whereas **the COLOR value is any value reported in advance by the AP to the STA**.
>
> [00146] A COLOR field indicating the COLOR value may be included in an HEW-SIGA. In order to report whether the COLOR field is present, the HEW-SIGA may further include a COLOR indication field. For example, **if the COLOR indication field is set to 0**, it indicates that the COLOR field is present in the HEW-SIGA. If the COLOR indication field is set to 1, it indicates that the COLOR field is not present in the HEW-SIGA.

> [00147] If the **COLOR field is included as an identifier for identifying a BSS in the HEW-SIGA, the COLOR field may be set to a specific value such as 0**.
>
> [00148] If a received frame has the COLOR field which is set to a specific value such as 0, this implies that the received frame needs not to be filtered out but to be processed.
>
> [00149] As described above, in the HEW PPDU format, the transmitter STA can perform simultaneous transmission to the plurality of destination STAs by independently divided channels. In addition, for the purpose of bandwidth signaling through an RTS/CTS frame, the RTS/CTS frame may be transmitted as a PPDU format in each subchannel.

SAMSUNG-1016, [0145]-[0149] (emphasis added).

[1.6] wherein the signaling information is transmitted from a base wireless communication terminal to which the wireless communica-tion terminal is associated.

179. Choudhury renders obvious [1.6]. As discussed above (*supra* §XIV.A.[1.4]), Choudhury discloses signaling information in the form of either a Low Power/High Interference Indicator or a reserved COLOR field value of "0000". SAMSUNG-1009,[0026], [0029]. Choudhury further teaches that this signaling information is transmitted within a wireless network environment comprising access points (APs) and stations (STAs). SAMSUNG-1009,[0020]-[0021], FIG. 1.

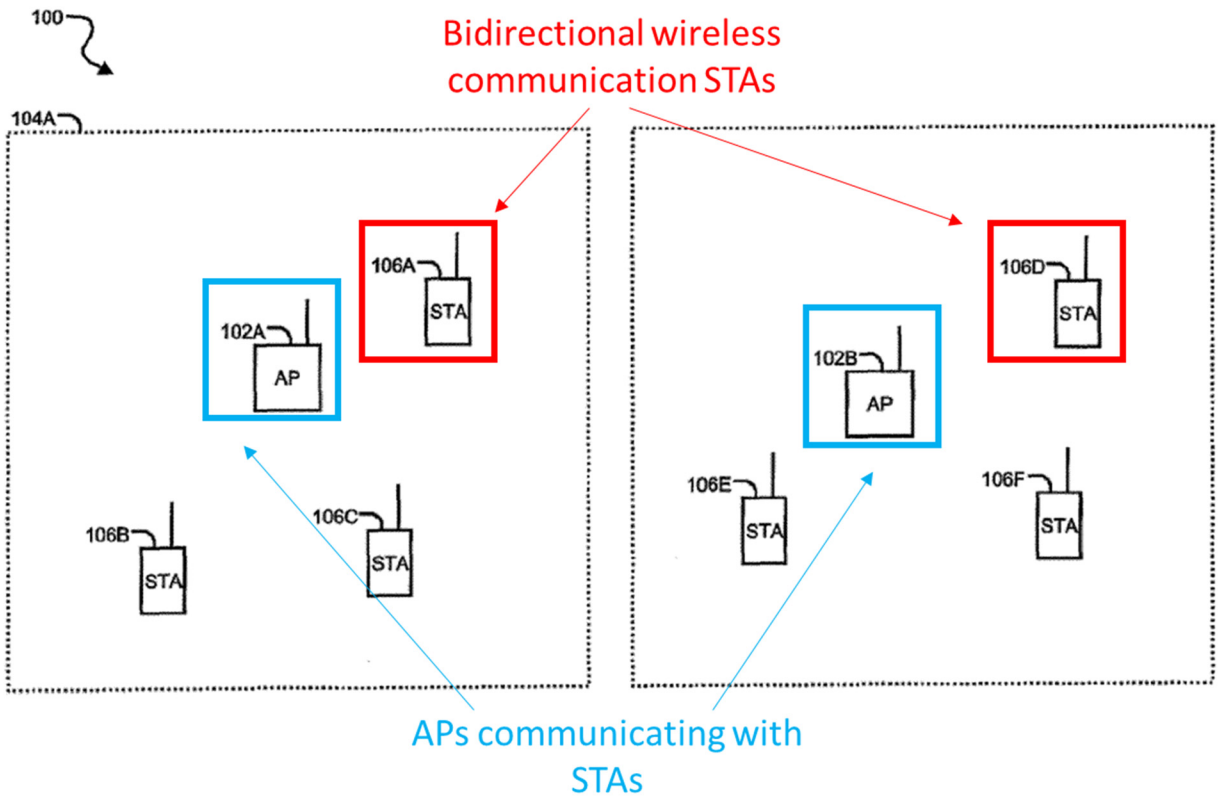

Fig. 1

SAMSUNG-1009, FIG. 1 (annotated).

180. Choudhury discloses that "one or more wireless network APs and STAs are configured to transmit and to recognize a signal field" containing this signaling information. SAMSUNG-1009, [0030]. In the context of IEEE 802.11 networks described by Choudhury, APs function as base wireless communication terminals that manage network access and provide connectivity for associated STAs. SAMSUNG-1009, [0018]-[0020], [0034]-[0035]. Specifically, Choudhury explains that the "AP enforces rules" that determine which STAs can operate within a network, indicating the AP's role as a base terminal managing associated devices. SAMSUNG-1009, [0034].

181. Choudhury's network architecture, illustrated in FIG. 1, shows APs (102A, 102B) serving networks (104A, 104B) containing STAs (106A-C, 106D-F). SAMSUNG-1009, [0020], FIG. 1. This architecture establishes an association relationship between STAs and their respective APs. SAMSUNG-1009,[0020]-[0021], [0025], [0029]. It would have known to a POSITA that in IEEE 802.11 networks, STAs associate with an AP to participate in the network, and the AP provides management functions including transmission of control and signaling information to these associated STAs. *See* SAMSUNG-1009, [0025], [0029], [0018]-[0020], [0027], [0032]-[0038], FIGs. 1, 2, 4, 5.

182. Furthermore, Choudhury describes scenarios where APs coordinate with STAs to manage interference and channel access. SAMSUNG-1009, [0020], [0025], [0029], [0034]-[0035]. The communication of signaling information, including the Low Power/High Interference Indicator or reserved COLOR values, occurs within this established network hierarchy where APs act as base terminals directing the behavior of associated STAs. Indeed, an AP is a particular type of STA in a BSS and can suffer from high interference in a similar manner to other STAs in the BSS (e.g., when interference is present throughout a BSS). *See* SAMSUNG-1017, [0058] ("an AP generally is regarded to be a special type of STA in IEEE 802.11 WLANs"); SAMSUNG-1018, [0183] ("An AP or a STA may construct an OBSS Report element on one or a group of STAs, or sectors, e.g., if

the AP or the STA experiences high level of interference from that particular entity.”)). Thus, a POSITA would have understood or found obvious that, in Choudhury, APs use the Low Power/High Interference Indicator or the reserved COLOR value to signal that operations based on BSS COLOR are not allowed.

183. A POSITA would have understood or found obvious, based on this disclosure, that the signaling information, including the Low Power/High Interference Indicator or the COLOR field value of “0000,” would be transmitted from a base wireless communication terminal (AP) to which the wireless communication terminal (STA) is associated. SAMSUNG-1009, [0025], [0029].

[7] The wireless communication terminal of claim 1, wherein the processor is configured not to perform a spatial reuse operation when the BSS color indicated by a signaling field of the PPDU is a predetermined value.

184. Choudhury renders obvious [7]. Choudhury discloses disabling spatial reuse operations when a BSS color field is set to a predetermined value indicative of high interference. For example, Choudhury discloses that a STA may utilize a value of ‘0000’ in the COLOR field to signify a high interference environment, instructing that STAs decoding such a value are “required to defer channel access.” SAMSUNG-1009, [0029]. *See also id.*, [0033] (“STAs may be configured to control their own channel access, inhibiting themselves from channel re-use.”)

185. A POSITA would have found it obvious that deferring channel access

in Choudhury would have included the act of refraining from initiating spatial reuse operations, as spatial reuse involves initiating transmission in the presence of other ongoing transmissions. SAMSUNG-1009, [0029]. A POSITA would have understood or found obvious that the deferment of channel access would have precluded the execution of spatial reuse procedures by Choudhury's STA, thereby selectively disabling spatial reuse.

186. Moreover, Choudhury discloses the importance of dynamically adapting spatial reuse behavior based on interference levels indicated by BSS color values. SAMSUNG-1009, [0026] (STA can "dynamically indicate that its transmissions need to be protected from OBSS transmission."). This teaching would have motivated a POSITA to configure the STA such that it abstains from spatial reuse operations upon detection of a specific BSS color predetermined to denote a high-interference condition. SAMSUNG-1009, [0026], [0029].

187. Additionally, Choudhury's use of the '0000' COLOR value as a control mechanism to inform STAs to defer from channel access would have served as a signal to disable transmission attempts during such interference conditions. SAMSUNG-1009, [0029]. Therefore, the STA's behavior of not performing spatial reuse when the COLOR value matches a predetermined value would have been an expected and logical implementation for a POSITA designing interference-aware communication terminals based on Choudhury. SAMSUNG-

1009, [0029], [0033]. *See also id.*, [0009], [0028]-[0034].

188. Furthermore, the objective of minimizing collisions and enhancing network efficiency under high interference conditions would have naturally led a POSITA to implement spatial reuse restrictions contingent upon predetermined BSS color values. SAMSUNG-1009, [0028]–[0029]. A POSITA would have understood that Choudhury had laid out the rationale for such restrictions, thereby rendering the configuration of the STA (***processor***) to inhibit spatial reuse in response to specific COLOR field values obvious. SAMSUNG-1009, [0033]. *See also* SAMSUNG-1009, [0017], [0023], [0025], [0028]-[0029], [0033]-[0034], FIGs. 1, 2, 4-5.

[8] The wireless communication terminal of claim 7, wherein the predetermined value is 0.

189. Choudhury renders obvious [8]. As discussed above (*supra* §§ IX.D, XIV.A.[7]), Choudhury disclosed the use of a specific BSS color value—namely, '0000'—as a reserved indicator to signify a high-interference environment and thereby mandate channel access deferral. SAMSUNG-1009, [0029]. In particular, Choudhury taught that this binary representation was to be interpreted as a control signal to prohibit further transmissions, including spatial reuse operations, under such conditions. SAMSUNG-1009, [0029].

190. The value '0000' as presented in Choudhury directly corresponds to the decimal value of 0 under universally recognized binary-to-decimal encoding

schemes, a fact that would have been immediately apparent to a POSITA. SAMSUNG-1009, [0025], [0029]. Given that the COLOR field is typically parsed as a binary value and often internally treated as its decimal equivalent within protocol stacks and hardware registers, the use of a decimal '0' would have been viewed by a POSITA as synonymous with '0000'. SAMSUNG-1009, [0029], [0025].

191. As discussed above (*supra* §XIV.A.[7]), Choudhury discloses that the '0000' value was not only reserved but also deliberately excluded from legitimate BSS color assignments, precisely to designate exceptional network conditions, including elevated interference scenarios that necessitate refraining from spatial reuse. SAMSUNG-1009, [0029]. This teaching would have provided both the motivation and the technical basis for a POSITA to configure a wireless communication terminal such that spatial reuse operations would be disabled upon detecting this predetermined value—specifically, a value of 0.

192. Additionally, the selection of 0 as the predetermined value would have been consistent with well-established engineering practice, wherein reserved or invalid states are often denoted by boundary values such as all-zero bit patterns SAMSUNG-1009, [0029], [0025]. This approach would have facilitated clear and straightforward signaling, allowing the receiving STA's processor to rapidly interpret a spatial reuse restriction without requiring additional computational

overhead or contextual analysis. SAMSUNG-1009, [0029].

193. Thus, a POSITA would have found it obvious to implement a system wherein the spatial reuse operation is disabled upon detection of a BSS color field set to 0, consistent with the functional behavior and reserved signaling disclosed in Choudhury. SAMSUNG-1009, [0029]. *See also* SAMSUNG-1016, [0145]-[0149] ("COLOR field may be set to a specific value such as 0").

[9.1] An operation method of a wireless communication terminal communicating wirelessly, the method comprising:

194. Choudhury renders obvious [9.1]. *Supra* §§XIV.A.[1.1], XIV.A.[1.2], XIV.A.[1.3].

[9.2] receiving a physical layer convergence procedure (PLCP) Processing Data Unit (PPDU); and

195. Choudhury renders obvious [9.2]. *Supra* §XIV.A.[1.4].

[9.3] not using a Basic Service Set (BSS) color indicated by the PPDU when signaling information indicates that an operation based on the BSS color is not allowed,

196. Choudhury renders obvious [9.3]. *Supra* §XIV.A.[1.4].

[9.4] wherein the BSS color is an identifier of a BSS,

197. Choudhury renders obvious [9.4]. *Supra* §XIV.A.[1.5].

[9.5] wherein the signaling information is transmitted from a base wireless communication terminal to which the wireless communica-tion terminal is associated.

198. Choudhury renders obvious [9.5]. *Supra* §XIV.A.[1.6].

[15] The method of claim 9, wherein the method further comprises not performing a spatial reuse operation when the BSS color indicated by a signaling field of the PPDU is a predetermined value.

199. Choudhury renders obvious [15]. *Supra* §XIV.A.[7].

[16] The method of claim 15, wherein the predetermined value is 0.

200. Choudhury renders obvious [16]. *Supra* §XIV.A.[8].

XV. Ground 2B: Choudhury-Stacey renders claims 2-3, 6, 10-11, and 14 obvious

A. Choudhury-Stacey combination

201. As discussed above (*supra* §IX.D), Choudhury teaches techniques for BSS color-based operations within wireless networks. SAMSUNG-1009, [0001], [0003]-[0007]; *supra* §IX.D. *See also id.*, [0021]-[0030]; FIGs. 1, 2, 3, and 5. Specifically, Choudhury discloses that the COLOR field indicates the BSS associated with a given transmission. SAMSUNG-1009, [0025]. Choudhury further describes the concept of disabling BSS color operation through dedicated signaling by teaching that "[a] STA may use a value of '0000' in the COLOR field to indicate high interference" where "devices decoding '0000' are required to defer channel access." SAMSUNG-1009, [0029]. Through this disclosure, it would have been obvious to a POSITA that a COLOR value of zero serves as a form of signaling to disable BSS color-based operations. A POSITA would have appreciated that this form of in-band signaling serves a similar role to Lee's "coloring disable bit" by selectively disabling BSS color-based behaviors under

certain interference conditions. *Supra* §§IX.A, XI.A. Given Choudhury's similarities to Lee, a POSITA would have been motivated to combine Stacey with Choudhury for reasons similar to those discussed above for the combination of Lee and Stacey. *Id.*

202. Stacey describes a framework for implementing dual NAV mechanisms, teaching that "[f]or the two NAVs maintained by a HE STA, one is identified as Intra-BSS NAV, and the second one is identified as regular NAV." SAMSUNG-1006, 39-40 (Section 25.2.1); *see also id.*, 48-52. Stacey also describes how a STA may conditionally update its NAV based on whether a received frame is identified as intra-BSS or inter-BSS via the BSS Color subfield in the HE-SIG-A field. *Id.*, 39-40. Furthermore, Stacey discloses power save operations that are responsive to BSS identification, including a mode in which an HE non-AP STA enters a doze state "until the end of a received PPDU" when specific conditions related to BSS color are met. *Id.*, 51-52 (Section 25.13.1); *see also* SAMSUNG-1009, [0020]–[0021]. From these disclosures, a POSITA would have understood that BSS color is used for multiple medium access control functions. Stacey further elaborates on TXOP Duration field usage and power save operations based on frame identification.

203. In view of the above, a POSITA would have been motivated to combine Choudhury's signaling techniques with Stacey's BSS color-dependent

operations – namely, NAV setting, spatial reuse, and power save features – so as to conditionally disable these operations when high interference is indicated. The Choudhury-Stacey combination enables a system in which receipt of a frame with COLOR=0000 disables BSS color-based interpretation by the receiving STA. In other words, the reserved color value (e.g., "0000") indicates that the BSS color is not valid or representative of any BSS, thereby suppressing inter-/intra-BSS NAV updates, spatial reuse behavior, and power save responses that would otherwise rely on BSS color. Such a combination effectively achieves dynamic interference mitigation and improved coordination in dense deployments, while preserving the BSS color framework under normal conditions. A POSITA would have understood or found obvious that this approach avoids misclassification of inter-BSS traffic as intra-BSS traffic, prevents unintended channel access behaviors, and maintains protocol compliance while disabling color-based logic only when appropriate.

204. Additionally, a POSITA would have recognized multiple technical benefits arising from the Choudhury-Stacey combination, including: (1) improved interference management via Choudhury's COLOR=0000 signaling, which prompts deferral of medium access when high interference is detected; (2) enhanced spatial reuse efficiency through conditional NAV setting based on valid BSS color identification, as taught by Stacey; and (3) increased power efficiency

by leveraging Stacey's power save mechanisms in conjunction with BSS color suppression signaling. These technical benefits would have provided further motivation to combine Choudhury and Stacey.

205. Moreover, a POSITA attempting to combine Choudhury and Stacey in the manner described would have had a reasonable expectation of success. Both references teach enhancements of the IEEE 802.11 protocol and share common context in MAC layer improvements, making their integration straightforward and predictable to a skilled artisan. A POSITA would have found the Choudhury-Stacey combination to constitute a mere combination of prior art elements (i.e., Choudhury's high interference signaling and Stacey's BSS color-based operations) according to known methods to yield predictable results (*i.e.*, disabling BSS color-dependent operations in the presence of interference). *KSR Int'l Co. v. Teleflex Inc.*, 550 U.S. 398, 401 (2007). A POSITA would further have understood this to be the application of a known technique (*i.e.*, conditional suppression of BSS color functionality) to a known system (*i.e.*, BSS color-based NAV and power save operations as taught by Stacey) to achieve a predictable and desirable outcome. *See* KSR, 550 U.S. at 401, 421. For at least these reasons, a POSITA would have found the Choudhury-Stacey combination to be obvious. *See KSR*, 550 U.S. at 421

206. In operation, the resulting Choudhury-Stacey device (CSD) receives transmissions that include a COLOR field value. Under normal operation, the

CSD performs intra-BSS/inter-BSS NAV setting, spatial reuse behavior, and power save mode activation based on BSS color identification. However, when the CSD receives a frame with COLOR=0000, the CSD suppresses operations that would otherwise depend on BSS color—namely, it refrains from updating either NAV, does not engage in spatial reuse behavior, and does not enter power save mode based on BSS classification. Because the COLOR value of zero signals high interference and does not relate to an actual BSS, the CSD does not performs operations based on BSS color since the CSD does not have a valid BSS color value to use for BSS identification. Through this behavior, the CSD efficiently mitigates interference and optimizes network operation in accordance with teachings from both Choudhury and Stacey.

B. Analysis

[2.1] The wireless communication terminal of claim 1, wherein the processor is configured not to set an Intra-BSS Network Allocation Vector (NAV) by using the BSS color indicated by a signaling field of the PPDU when the signaling information indicates that the operation based on the BSS color is not allowed,

207. The CSD renders obvious [2.1]. *Supra* §XI.B.[2.1]. Choudhury discloses that when a STA decodes a reserved COLOR field value of '0000', it defers channel access and suspends BSS color-based operations. SAMSUNG-1009,[0029]. This reserved value signals high interference, would make the processor to disable Intra-BSS NAV updates that rely on BSS color identification. Stacey teaches maintaining separate NAVs (Intra-BSS and Basic) based on BSS

classification. SAMSUNG-1006, 39. A POSITA would have combined teachings - Choudhury's '0000' signaling with Stacey's NAV framework, configuring the processor to bypass Intra-BSS NAV updates when '0000' is detected. SAMSUNG-1009, [0029]; SAMSUNG-1006, 39.

[2.2] wherein the Intra-BSS NAV is different from a Basic NAV and is a NAV which is set based on an Intra-BSS PPDU,

208. The CSD renders obvious [2.2]. *Supra* §XI.B.[2.2]. As discussed above (§§XI.B.[2.2], IX.B),Stacey explicitly differentiates Intra-BSS NAV (for same-BSS transmissions) from Basic NAV (for inter-BSS/unclassified frames). SAMSUNG-1006, 39. Choudhury's '0000' COLOR value forces STAs to treat PPDUs as unclassifiable, triggering Basic NAV updates under Stacey's rules.

[2.3] wherein the Basic NAV is set based on an Inter-BSS PPDU or a PPDU which is not able to be identified as the Inter-BSS PPDU or the Intra-BSS PPDU.

209. The CSD renders obvious [2.3]. *Supra* §XI.B.[2.3]. As discussed above, (§XV.B.[2.2]), Stacey mandates Basic NAV updates for inter-BSS PPDUs or frames that cannot be classified. SAMSUNG-1006, 39. Choudhury's '0000' value creates unclassifiable PPDUs by invalidating BSS color identification, directly invoking Stacey's Basic NAV protocol.

[3.1] The wireless communication terminal of claim 2, wherein the PPDU includes a TXOP Duration field in the signaling field of the PPDU and a medium access control (MAC) frame which includes a duration field,

210. The CSD renders obvious [3.1]. *Supra* §XI.B.[3.1]. A POSITA would have recognized that Choudhury's PPDU structure includes HE-SIG-A

fields with TXOP Duration data, while Stacey teaches using TXOP Duration for NAV updates. SAMSUNG-1009, [0025]; SAMSUNG-1006, 39. A POSITA would have understood or found obvious that the CSD processes TXOP Duration in HE-SIG-A alongside MAC frame Duration fields, as both references operate within IEEE 802.11ax standards.

[3.2] wherein the TXOP Duration field indicates information used for setting the Intra-BSS NAV and the Basic NAV,

211. The CSD renders obvious [3.2]. *Supra* §XI.B.[3.2]. Stacey discloses that TXOP Duration fields in HE-SIG-A dictate NAV settings for Intra-BSS and Basic NAVs. SAMSUNG-1006, 39). A POSITA would have been motivated to implement Choudhury's '0000' value to trigger Stacey's rule to prioritize Basic NAV updates, addressing the "information used for setting."

[3.3] wherein the duration field indicates information used for setting the Intra-BSS NAV and the Basic NAV,

212. The CSD renders obvious [3.3]. *Supra* §XI.B.[3.3]. Stacey teaches MAC frame Duration fields to override HE-SIG-A TXOP data when valid frames are present. SAMSUNG-1006, 39. A POSITA would have understood or found obvious that in the CSD, Choudhury's '0000' COLOR value ensures MAC frame data takes precedence. Thus, aligning with the claimed use of Duration fields for NAV updates.

[3.4] wherein the processor is configured not to use the TXOP Duration field for setting the Intra-BSS NAV or the Basic NAV when the wireless communication terminal gets a valid signaling field of the MAC frame.

213. The CSD renders obvious [3.4]. *Supra* §XI.B.[3.4].

[6.1] The wireless communication terminal of claim 1, wherein the operation based on the BSS color includes entering a doze state of a power save operation based on a BSS color indicated by a signal-ing field of the PPDU,

214. The CSD renders obvious [6.1]. Supra §XI.B.[6.1]. A POSITA would have understood that Choudhury's '0000' COLOR value performs full channel deferral, precluding power save mode entry. SAMSUNG-1009, [0029]. While Stacey ties doze state activation to valid BSS color matches (SAMSUNG-1006, 51-52), which '0000' renders obvious. Thus, a POSITA would have understood or found obvious that deferred access under Choudhury suspends power save operations.

[6.2] wherein the power save operation is an operation for the wireless communication terminal to enter the doze state until an end of a received PPDU which is an Intra-BSS PPDU.

215. The CSD renders obvious [6.2]. *Supra* §XI.B.[6.2]. Stacey requires BSS color matching for doze state entry. SAMSUNG-1006, at 51-52. Choudhury's '0000' creates a non-matching condition by reserving the COLOR field, preventing STA compliance with Stacey's power save criteria. A POSITA would have recognized that CSD teachings directly corresponds to the claimed suspension of power save operations.

[10.1] The method of claim 9, wherein the method further comprises not setting an Intra-BSS Network Allocation Vector (NAV) by using the BSS color indicated by a signaling field of the PPDU when the signaling information indicates that the operation based on the BSS color is not allowed,

216. The CSD renders obvious [10.1]. *Supra* §§XI.B.[10.1], XV.B.[2.1].

[10.2] wherein the Intra-BSS NAV is different from a Basic NAV and is a NAV which is set based on an Intra-BSS PPDU,

217. The CSD renders obvious [10.2]. *Supra* §§XI.B.[10.2], XV.B.[2.2].

[10.3] wherein the Basic NAV is set based on an Inter-BSS PPDU or a PPDU which is not able to be identified as the Inter-BSS PPDU or the Intra-BSS PPDU.

218. The CSD renders obvious [10.3]. *Supra* §§XI.B.[10.3], XV.B.[2.3].

[11.1] The method of claim 10, wherein the PPDU includes a TXOP Duration field in the signaling field of the PPDU and a medium ac-cess control (MAC) frame which includes a duration field,

219. The CSD renders obvious [11.1]. *Supra* §§XI.B.[11.1], XV.B.[3.1].

[11.2] wherein the TXOP Duration field indicates information used for setting the Intra-BSS NAV and the Basic NAV,

220. The CSD renders obvious [11.2]. *Supra* §§XI.B.[11.2], XV.B.[3.2].

[11.3] wherein the duration field indicates information used for setting the Intra-BSS NAV and the Basic NAV,

221. The CSD renders obvious [11.3]. *Supra* §§XI.B.[11.3], XV.B.[3.3].

[11.4] wherein the method further comprises not using the TXOP Duration field for setting the Intra-BSS NAV or the Basic NAV when the wireless communication terminal gets a valid signaling field of the MAC frame.

222. The CSD renders obvious [11.4]. *Supra* §§XI.B.[11.4], XV.B.[3.4].

[14.1] The method of claim 9, wherein the operation based on the BSS color includes entering a doze state of a power save operation based on a BSS color indicated by the signaling field of the PPDU,

223. The CSD renders obvious [14.1]. *Supra* §§XI.B.[14.1], XV.B.[6.1].

[14.2] wherein the power save operation is an operation for the wireless communication terminal to enter the doze state until an end of a received PPDU which is an Intra-BSS PPDU.

224. The CSD renders obvious [14.2]. *Supra* §§XI.B.[14.1], XV.B.[6.2].

XVI. Ground 2C: Choudhury-Zhou renders claims 4-5, 12, and 13 obvious

A. Choudhury-Zhou combination

225. A POSITA would have been motivated to combine Choudhury and Zhou to address BSS color collision detection and signaling in dense wireless networks. As discussed above (*supra* §§IX.D, IX.C), Choudhury discloses a mechanism by which the validity of BSS color-based operations may be conditionally disabled based on network conditions. A POSITA would have appreciated that this technique effectively prevents color-based interpretation and classification of incoming frames when interference is detected. Given Choudhury's similarities to Lee, a POSITA would have been motivated to combine Zhou with Choudhury for reasons similar to those discussed above for the combination of Lee and Zhou. *Supra* §§XII.A-B, IX.A, IX.C.

226. Although Choudhury describes high interference scenarios, Choudhury does not disclose any mechanism by which a STA can detect a BSS color collision – *i.e.*, a scenario in which two overlapping BSSs incidentally use

the same BSS color – prior to such signaling. Zhou addresses this deficiency by teaching a method of detecting BSS color collisions and reporting them to an AP. SAMSUNG-1007, [0005], [0070]-[0071]; SAMSUNG-1008, [0004], [0071]-[0072]. Specifically, Zhou discloses that a STA may detect a BSS color collision by receiving two frames with identical BSS color values but different MAC addresses, thereby determining that the frames originate from different BSSs. SAMSUNG-1007, [0070]; SAMSUNG-1008, [0071]. Upon detection, the STA transmits a "collision report," which may comprise a single bit, to the AP. SAMSUNG-1007, [0071]; SAMSUNG-1008, [0072]. Zhou further discloses that, upon receiving such a collision report, the AP may take remedial action – including preventing STAs from transmitting until a new BSS color is assigned. SAMSUNG-1007, [0063], [0081]; SAMSUNG-1008, [0064], [0082].

227. A POSITA would have found it obvious to integrate Zhou's MAC-based collision detection and reporting mechanism with Choudhury's signaling framework. Through such a combination, the resulting device, CZD, can (1) detect a BSS color collision by analyzing MAC addresses in received frames; (2) transmit a collision report to the AP upon detection of such a collision; and (3) disable BSS color-based operations by setting COLOR = '0000' in outgoing frames, thereby prompting receiving STAs to defer channel access and suppress color-based functionality.

228. A POSITA would have recognized that the CZD offers several distinct advantages, including: (1) enabling proactive detection of BSS color collisions through Zhou's MAC address-based analysis; (2) permitting flexible and efficient signaling of collision conditions via Choudhury's reserved COLOR field values; and (3) avoiding unnecessary transmission suppression by allowing continued operation using alternate identifiers, such as MAC addresses, when BSS color is deemed unreliable. A POSITA would have appreciated that such a system provides more nuanced interference management than disabling transmissions entirely, as proposed by Zhou.

229. A POSITA would have had a reasonable expectation of success in combining Choudhury and Zhou. Both references address similar problems in the same technical domain – namely, efficient channel access and collision avoidance in IEEE 802.11ax networks – and provide complementary teachings. A POSITA would have found the Choudhury-Zhou combination to be the mere combination of prior art elements (*i.e.*, Choudhury's high interference signaling and Zhou's BSS color collision detection and reporting) according to known methods to yield predictable results (*i.e.*, detection of BSS color collisions and subsequent signaling to disable BSS color-based operations). *KSR Int'l Co. v. Teleflex Inc.*, 550 U.S. 398, 401 (2007). A POSITA would further have understood this to be the application of a known technique (Zhou's MAC-based collision detection) to a

known system (Choudhury's signaling protocol using reserved COLOR values) to achieve predictable outcomes in network coordination and interference mitigation. *See KSR*, 550 U.S. at 401, 421. For at least these reasons, a POSITA would have found the Choudhury-Zhou combination obvious. *Id.*; *KSR*, 550 U.S. at 421.

230. In operation, the resulting CZD receives frames that include BSS color information in the COLOR field. Under normal circumstances, the CZD interprets this BSS color for classification and channel access decisions. However, the CZD is capable of detecting BSS color collisions by comparing MAC addresses in two or more frames with identical COLOR values. When the CZD detects such a collision – indicating that multiple BSSs are using the same color – it transmits a one-bit "collision report" to the AP. In response, either the AP or the CZD itself sets COLOR = '0000' in transmitted frames, thereby signaling to other STAs that BSS color-based operations (e.g., spatial reuse, NAV updates, and power save mode) are disallowed. The result is a more robust system that can dynamically suppress unreliable BSS color usage in response to real-time collision detection.

B. Analysis

[4.1] The wireless communication terminal of claim 1, wherein the processor is configured to signal that the operation based on the BSS color is not allowed when the wireless communication terminal recognizes that a BSS color collision has occurred,

231. The CZD renders obvious [4.1]. *Supra* §XII.B.[4.1]. As discussed

above (§§XII.B.[4.1], IX.D), Choudhury's APs transmit '0000' in high-interference scenarios (SAMSUNG-1009, [0029]), signaling BSS color-based operations are disallowed. APs act as base terminals managing associated STAs. SAMSUNG-1009, [0034]. A POSITA would have understood or found obvious that CZD teaches "signaling information transmitted from a base wireless communication terminal.

[4.2] wherein the BSS color collision represents that different BSSs correspond to one BSS color.

232. The CZD renders obvious [4.2]. *Supra* §XII.B.[4.2]. A POSITA would have understood that in instances wherein Choudhury's '0000' creates ambiguity in BSS identification, Zhou would have defined BSS color collisions as overlapping color assignments. SAMSUNG-1007, [0005]. A POSITA would have recognized '0000' as a collision trigger, as it renders obvious BSS differentiation, aligning with Zhou's different BSSs correspond to one BSS color definition.

[5] The wireless communication terminal of claim 4, wherein the processor is configured to determine that BSS color collision has occurred based on address fields of a medium access control (MAC) frame.

233. The CZD renders obvious [5]. *Supra* §XII.B.[5]. As discussed above (§§XII.B.[5], IX.C), Zhou teaches detecting BSS color collisions by comparing MAC addresses of frames with identical color values. SAMSUNG-1007, [0070]. In the CZD, a POSITA would have understood or found obvious that MAC

address analysis resolves ambiguity caused by '0000'.

[12.1] The method of claim 9, wherein the method further comprises signal that the operation based on the BSS color is not allowed when the wireless communication terminal recognizes that a BSS color collision has occurred,

234. The CZD renders obvious [12.1]. *Supra* §§XII.B.[12.1], XVI.B.[4.1].

[12.2] wherein the BSS color collision represents that different BSSs correspond to one BSS color.

235. The CZD renders obvious [12.2]. *Supra* §§XII.B.[12.2], XVI.B.[4.2].

[13] The method of claim 12, wherein the signaling that a BSS color collision has occurred comprises determining that BSS color collision has occurred based on address fields of a medium access control (MAC) frame.

236. The CZD renders obvious [13]. *Supra* §§XII.B.[13], XVI.B.[5].

XVII. CONCLUSION

237. For all the reasons I have noted in the foregoing paragraphs, claims 1-16 of the '597 Patent are obvious in view of the references discussed above.

238. I currently hold the opinions set expressed in this declaration. But my analysis may continue, and I may acquire additional information and/or attain supplemental insights that may result in added observations.

APPENDIX A

Mark P. Mahon, Ph.D.
Teaching Professor
Pennsylvania State University
School of Electrical Engineering and Computer Science
W209A Westgate Bldg.
University Park, PA

Highlights

Teaching faculty experienced in research and systems development in cellular and mobile wireless networks, wireless local area networks, wireless network security, mobility management, mobile data systems including networks, protocols, and applications, wideband signal processing, modulation theory, algorithms, mathematical/analytical modeling, communication, detection and estimation, and control systems. Pursues funding for and conducts advanced research in computer and mobile networks, theoretical and experimental analysis of communication systems, cellular, wireless, and mobile systems, wideband signal processing, sensors, tracking, localization, and data fusion. Experienced in hardware/software development, data acquisition, integration, and testing, field test planning, preparation, and execution. Extensive programming experience including UI, analysis tools, real-time object-oriented programming, and embedded systems code development in C, C++, python, java, Verilog, RTL, VHDL, HDL, and assembly.

Education

PhD. Acoustics, The Pennsylvania State University, University Park, PA 16802, 2001
M.S. Electrical Engineering, The Pennsylvania State University, University Park, PA, 16802, 1991
B. S. Electronics Engineering, The University of Scranton, Scranton, PA, 18510, 1987

Employment

July 2021 – Present: *Teaching Professor, School of Electrical Engineering and Computer Science, The Pennsylvania State University, University Park, PA 16801*
June 2018 – June 2021: *Associate Teaching Professor*
Aug. 2015 – June 2018: *Assistant Teaching Professor*
Teach graduate and undergraduate courses in computer science and electrical engineering such as communication networks, mobile networks, neural networks, programming, mathematics, and wireless security. Advise and direct graduate students' MS and PhD research in the areas of wireless and computer networks, data pipelining, network resource allocation and optimization techniques, ultrawide band systems, multiple antenna applications, and wireless security. Guide Schreyer Honors College students' honors theses. HackPSU, BlockChain@PSU, and ML@PSU faculty adviser, member of graduate advising committees, member of Computer Science Undergraduate Curriculum Committee, member of School of EECS Management Committee, advise undergraduate electrical engineering, computer science, computer engineering, and data science students.

2003 – Aug. 2015: *Associate Research Professor, Applied Research Laboratory, Communications, Information, and Navigation Office, The Applied Research Laboratory, The Pennsylvania State University, State College, PA* Principal Investigator, Co-Principal Investigator, Technical lead conducting research on multi-Int data fusion and UI design to support intelligence analysts in Combat Operation Centers, cellular and mobile networks, computer network security, mobile communication systems, and wideband signals and image processing with total funding over $12M.

2002 – 2003: *Sr. Systems Engineer, Klein & Stump, Inc., 2120 Washington Blvd. #400, Arlington, VA 22204* Researcher and technical consultant working on wireless communications projects for US Special Operations Command (SOCOM) and Naval Information Warfare Activity (NIWA). Awarded $150k SBIR for SOCOM advanced signal simulator.

1991 – 2002: *Assistant Research Professor, Applied Research Laboratory, Communication Sciences and Technology Division, The Applied Research Laboratory, The Pennsylvania State University, State College, PA 16804* Principal Investigator and researcher conducting research on cellular and mobile networks, wideband signals, tracking and localization, adaptive signal processing, acoustic propagation, sensor systems, remote sensing, and active noise control. Awarded $750k for development of novel wavelet based wideband signal detection for high altitude sensors.

1988 – 1989: *Program Engineer, Central Intelligence Agency, Langley, VA 22101*
Assisted in the development of algorithms and signal processing systems for novel applications in the areas of RF communications and signal modulation techniques.

Detailed Research Experience:

Current ongoing research:
Resource allocation and scheduling improvements in NG networks and edge computing; Multiple Input Multiple Output antenna techniques for increased capacity in NG systems; Fast handover techniques using blockchains to reduce mobility interruption times in 5G networks; AI/NN techniques applied to network scheduling and optimization, and mobile robotics for localization and mapping; Automated object detection and 3D mapping using sonar array data. Security vulnerabilities in UWB ranging.

2015 – Present
Lead graduate and undergraduate student research in wireless communication networks, distributed video processing in cellular systems, UWB ranging, communication systems and security, software defined network security, application of game theory to cyber resiliency, wireless, machine learning, big data analytics, and artificial intelligence for mobile and computer network security and automated detection in acoustic and sonar systems.

2014 – 2015
Leading internal research and development effort on deep packet inspection for zero day and predictive detection for data networks. Technical performer developing novel deformable wavelet-based contour matching technique for automated object detection in satellite images. Acoustic tracking and identification of drones for area defense system.

2014
Developed real-time scanner for 802.15.4 (LR-WPAN) protocol deployed on software defined radio platform.

2013-2014
Technical lead on developing novel mathematical model for analyzing torpedo acoustic threat surrogate systems for US Navy. Experimental lead on disposable, adaptive, high bandwidth fiber-optic undersea communication system for US Navy.

2013
Implemented a novel matched filter receiver for a unique OFDM signal of interest to facilitate signal detection in a high co-channel interference environment of a wide field of view high altitude

receiver and wideband signal set design in highly complex propagation environments for Department of Defense (DoD).

2012-2013
Technical lead for design and implementation of a real-time transmitter/receiver on a software defined radio platform for maritime communication systems (Automatic Information System/Maritime Security).

2012
Communications/signal processing technical consultant on Maritime Domain Operations and Unmanned Surface Ship Interdiction study effort for US Navy.

2011-2012
Principal Investigator, technical and experimental lead on fiber optic undersea communication system for Advanced Submarine System Development effort for US Navy.

2011
Technical lead on mathematical analysis, algorithm development, and implementation of pattern of life signal to noise ratio analysis in high co-channel interference environment for DoD.

Trusted agent for Army Research Lab to review and critically analyze work associated with wideband signaling and passive emissions collection from cell phones. Reviewed contractor data analysis and technical briefings for scientific accuracy and rigor. Advised the sponsor on contractor testing methodologies, procedures, and analysis techniques. Technical lead implementing unique wideband acoustic communication system and specialized signal processing hardware for an acoustic system being utilized in a complex maritime environment for the DoD.

2009 – 2010
Tiger team lead for large unmanned undersea vehicle (UUV) assigned to identify platform induced electromagnetic interference with electronic payload system in the HF and acoustic regimes for the US Navy.

Developed and implemented a novel algorithm to calculate the effective force charge based on muzzle sensor data utilizing MEMS transducers and PIC controller on a portable howitzer for the US Army.

Conducted study and authored Intelligence, Surveillance, and Reconnaissance (ISR) for Unmanned/Minimally Manned Undersea Vehicle (UMUV) report presented to Defense Advanced Research Projects Agency (DARPA).

2006 – 2009
Principal Investigator for a multi-year research and FPGA-based engineering prototype development effort in the area of 3G/4G (UMTS/LTE) cellular and wireless (IEEE 802.16 and 802.11) communication systems; Effort consisted of three phases: theoretical and analytical study, proof-of-concept development, and testing, and prototype development for DoD.

2005-2006
Technical lead on Information Fusion engine integration into a sandbox enclave at Joint Interagency Task Force South (JIATF-S) to support multi-int data fusion.

2003 – 2006
Principal Investigator for multi-year Office of Secretary of Defense sponsored research program in the area of multi-intelligence data fusion (fusion engine and UI interface) as part of the overall initiative of Force Transformation; worked extensively with NGA, DIA, DISA, OSD, all military services, and some coalition components. Led team of software engineers to develop scalable user-facing application and backend data fusion engines.

2002 – 2003
Pursued funding for research interests in the areas of wireless/wideband communications, wideband systems, source detection/localization, intelligent system of systems design, and data fusion; Awarded Phase I, Small Business Innovative Research contract for Portable Signal Training System by SOCOM (02-013); Technical consultant for Naval Information Warfare Center on Common for High Performance Computing Software Support Initiative's (CHSSI) Electronic Battlefield Environment (EBE) portfolio (Electromagnetic Environmental Effects Toolkit), SBIR, MERIT/TENCAP, TST programs

1998 – 2002
Researcher and principal investigator performed research in large time-bandwidth product (wavelets) source detection and localization – theoretical, analytical, and field testing; CDMA IS-95A/3G cellular communications; Developed mathematical analytical models and included code development of the CDMA air interface physical layer implementing major aspects of the CDMA protocol for test and analysis purposes; Built real-time hardware platform for deploying developed CDMA physical layer code.

1996 – 1998
Principal Investigator in charge of signal processing algorithm and code development, image acquisition and compression, telephony, and user interface design for an experimental remote, autonomous, acoustic rockslide detection for Conrail. Work included algorithm and code development utilizing embedded digital signal processing (DSP) board and development of unique algorithms for real-time monitoring of transducers to create an event detection system.

1991 – 1997
Performed fundamental research in the areas of signal processing algorithm development, acoustic atmospheric propagation, detection, source localization, beamforming, system identification, and active control; Main responsibilities include real-time code development (C, Visual C++, assembly) for signal processing systems, adaptive beamforming, and embedded processing for eight major projects during this time. Multiple DSP platform development; Active Noise Control, feature extraction, data logging and fusion, passive acoustic tracking, beamforming, and analysis for these projects

1988-1989
Assisted in the development of algorithms and signal processing systems for novel applications in the areas of RF communications and signal modulation techniques.

Case History:

October 2024 – March 2025, Carmichael, IP
Aylo Freesites LTD v. Wellcomemat LLC IPR2024-00710 (IPR)
Consulting for respondent Wellcomemat. Technology related to remote editing of video content. Filed declaration 2/12/25. Deposed 3/13/25.

May 2024 – Present, McKool Smith
AT&T Services, Inc, Cellco Partnership D/B/A Verizon Wireless, Ericsson, Inc., and Nokia Corporation v. ASUS Technology Licensing, Inc. (IPR)
Consulting for petitioners. Technology related to control signaling in 5G networks. Filed declarations on 6/4/24 and 10/16/24.

May 2024 – July 2024, Merchant & Gould
Apex Beam Technologies LLC v. TCT Mobile International Ltd. Case No. 2:21-cv-438 (EDTX)
Consulting for defendant TCT. Technology related to signaling in 5G cellular networks. Wrote submitted claim construction declaration filed on 7/17/24. Deposed 7/31/24 on claim construction declaration.

March 2024 – February 2025, Duane Morris
Ericsson and Nokia v. Active Wireless IPR2024-00886, -00951, -00985, -00986
Active Wireless v. T-Mobile, Ericsson, and Nokia Case No. 2:23-cv-00261 (EDTX)
Consulted for petitioners Ericsson and Nokia. Technology related to signaling in 4G and 5G cellular networks. Wrote four declarations for IPR. Consulted for defendants T-Mobile and intervenors. Submitted invalidity report for defendant and intervenors; deposed 12/4/24.

March 2024 – May 2024, Quinn Emanuel, LLP
Samsung Electronics Co., Ltd. v. Datang Mobile Communications Equipment Co., Ltd.
Consulted for petitioner Samsung. Technology related to random access in 4G/5G cellular networks. Wrote declaration in support of claim construction. Case stayed.

January 2024 – Present, McKool Smith
Headwater Research, LLC v. AT&T Corp. et al, Case No. 2:23-cv-00398
Consulting for defendant. Technology related to control of battery and data usage in 4G/5G user devices. Filed a rebuttal report 3/13/25. Deposed 3/19/25.

December 2023 – Present, Duane Morris
Ericsson, Inc. and Nokia of America v. XR Communications, LLC, IPR2024-00613 (IPR); Case No. 2:23-CV-00202-JRG-RSP (EDTX). Consulted for petitioners and defendants. Technology related to MIMO in cellular networks. Filed declarations on 3/6/24. Deposed 1/7/25.

October 2023 – April 2024, Erise IP; Finnegan, DLA Piper, Husch Blackwell
BNR v. ASUSTek/Media Tek/Laird/NXP Inc. Inv. No. 337-TA-1367 (USITC). Consulting for defendant ASUS on ASUS (Qualcomm-based products) non-infringement and JDG (ASUS/Media Tek/ Laird/ NXP) on Tech DI non-infringement on WiFi wireless devices and semiconductor chips with wireless capabilities related to wireless transmission technologies. Wrote rebuttal report. BNR settled with ASUS and Media Tek; BNR withdrew complaint for NXP.

September 2023 – April 2024, McKool Smith
Daingean Technologies Ltd. v. AT&T, et al, Case No. IPR2024-00309. Consulting for petitioner AT&T. Technology related to 5G wireless transmissions. Wrote declarations. Case settled.

August 2023 – December 2023, Greenberg Traurig
Atlas Global Technologies, LLC v. Acer Incorporated, No. 2:22-cv-00259 WDTX. Consulting for defendant Acer. Technology related to wireless transmissions in WiFi networks. No reports. Settled.

August 2023 – February 2025, McKool Smith
Ericsson v. Lenovo/Motorola, In the Matter of Certain Mobile Phones, Components Thereof, and Products Containing Same, Inv. No. 337-TA-1375 (USITC); IPR204-00702 (IPR)
Consulting for Complainant Ericsson on technology related to 5G cellular signaling technology. Infringement and invalidity rebuttal. Testified at the ITC. Filed Decl 12/6/24. Deposed IPR 2/12/25.

August 2023 – Present, Caldwell, Cassady and Curry
Neo Wireless, LLC v. Ford, et al., Case No. 2:22-MD-03034. Consulting for plaintiff on technology related to 4G cellular radio access. Wrote infringement and invalidity rebuttal reports.

June 2023 – November 2023, Duane Morris
Ericsson, Inc., and Cellco Partnership D/B/A Verizon Wireless v. Woodbury Wireless LLC., IPR 2023-01364. Consulted for petitioner Verizon. IPR. Technology related to MIMO and minimization of interference. Declaration filed 10/10/23. Case settled.

January 2023 – April 2023, McKool Smith
Ericsson v. Koninklijke KPN N.V., Case No. IPR2023-00582. Consulting for Petitioner Ericsson. IPR. Technology related to neighbor cell lists in wireless systems. Declaration filed 2/17/23.

November 2022 – April 2023, Finnegan, Henderson, Farabow, Garrett & Dunner, LLP
Qualcomm, Inc. vs. FedEx, Inc., IPR 2022-00585. Consulting for patent owner FedEx. Wrote IPR declaration. Deposed 4/19/23.Technology related to sensor information collected by tracking devices.
October 2022 – November 2023, BC Law Group, P.C.
Lionra Technologies Limited v. Apple, Inc. Case No. 6:22-cv-00351-ADA, WDTX
Consulting for patent owner Lionra. Case dismissed 11/18/23.

September 2022 – June 2023, Quinn Emanuel, LLP
Google LLC v. Sonos, Inc., Inv. No. 337-TA-1330 (USITC)
Consulting for patent owner Google. Wrote infringement and validity rebuttal reports.
Technology related to voice assistants and smart devices. Deposed 4/14/23. Testified at trial 6/20/23 and 6/23/23.

September 2022 – August 2023, BC Law Group, P.C.
Apple, Inc. vs. Speir Technologies Limited, IPR2022-01512 and -00151
Consulted for patent owner Speir on UWB localization technology. Wrote IPR declarations. Deposed 10/25/23. Case dismissed 11/18/23.

August 2022 – July 2024, Venable, LLP
VoIP-Pal.com, Inc. v. Verizon Communications Inc. Case No. 6:21-cv-00672, WDTX
Consulting for defendant Verizon. Wrote non-infringement report. Deposed 5/17/23.
Technology relates to VoIP in cellular networks. Summary judgement of non-infringement.

July 2022 – November 2023, Quinn Emanuel Urquhart & Sullivan, LLP
Evolved Wireless LLC v. Samsung Electronics Co., Ltd., and Samsung Electronics America, Inc., Case No. 2-21-cv-00033, EDTX. Technology related to handovers in 4G networks.
Consulting for defendant Samsung. Wrote non-infringement and validity rebuttal report. Deposed 7/5/23; Testified at trial 11/14/23.

March 2022 – Dec. 2022, Knobbe, Martens, Olson & Bear, LLP
Jawbone Innovations, LLC v. Amazon.com, Inc., et al.
Consulting for petitioner Amazon (IPR). Technology related to tracking using acoustic arrays. Case stayed. No reports.

May 2022 – Dec. 2022, McKool Smith; Alston Bird
Ericsson Inc. and Telefonaktiebolaget LM Ericsson vs. Apple Inc., Case No. 2:21-cv-376, EDTX
Consulted for plaintiff and counter-defendant Ericsson.
Report on Essentiality and Rebuttal report (FRAND). Deposed 10/4/2022. Testified 12/7/2022. Case settled during trial.
Broad spectrum of technology related to cellular networks (core network and mobile device)

March 2022 – Dec. 2022, McKool Smith
Ericsson Inc. and Telefonaktiebolaget LM Ericsson vs. Apple Inc., Inv. No. 337-TA-1299, ITC
Consulted for Ericsson. Opening and Rebuttal report. Deposed 10/7/2022. Case settled.
Technology related to security in cellular systems.

January 2022 – March 2023, Duane Morris
Telecom Network Solutions v. AT&T Inc., et al, Case No. 2:21-cv-415 and Verizon Communications Inc., et al, Case No 2:21-cv-416, EDTX
Consulted for defendants AT&T and Verizon on Invalidity. Case settled; no reports filed.
Technology related to QoS in cellular networks.

September 2021 – December 2021, Duane Morris, LLP
KAIFI LLC v. Verizon Wireless, Case No. 2:20-cv-280-JRG, EDTX
Consulted for defendant Verizon. Wrote Non-Infringing Alternatives and Non-Infringement reports.
Deposed 12/15/21. Case settled. Technology related to cellular and WiFi enablement cellular systems.
September 2021 – December 2021, Quinn Emanuel, LLP

L2 Mobile Technologies, LLC v. Google, Case No. 6:21-cv-358, WDTX
Consulted for defendant Google. Wrote reply Claim Construction brief. Case settled.
Technology related to control signaling in cellular systems.

August 2021 – May 2022, McKool Smith
Godo Kaisha IP Bridge 1 v. Ericsson, Case No. 2:21-cv-00213-JRG, EDTX
Consulted for defendant Ericsson. IPR and Claim Construction declarations.
Technology related to signaling in OFDM systems.

July 2021 – August 2021, Quinn Emanuel, LLP
Finesse Wireless, LLC v. Nokia, et al., Case No. 2:21-CV-00063-JRG, EDTX
Consulted for defendant Nokia on claim construction. Wrote declaration and deposed on 8/17/21.
Technology related to coding techniques in wireless systems.

June 2021 – Dec 2021, Knobbe, Martens, Olson & Bear, LLP
Vocalife LLC v. Amazon.com, Inc., et al., Case No. 2:20-cv-00401-JRG-RSP, EDTX
Consulted for defendant Amazon on claim construction. Stayed pending sister case outcome.
Technology related to echo cancelation and signal enhancement in acoustic systems.

March 2021 – Sept 2021, Wilson Sonsini
Lenovo Holding Co, Inc., et al. v. InterDigital Technology Corp.
IPR. Consulted for InterDigital. Wrote three declarations. Deposed 7/27/21.
Technology related to control signaling in cellular systems.

January 2021 – May 2021, Winston & Strawn, LLP
Ericsson, Inc. v. Samsung Electronics, Ltd., ITC
Consulted for plaintiff. Settled May 2021. No deposition. No declaration filed.
Patents dealt with antenna arrays for 5G/4G base stations, access point signaling, bearer handling.

November 2020 – June 2021, Sheppard Mullin
Hong Kong uCloudlink v. SIMO Holdings, Inc. and Skyroam, Inc., Case No. 18-cv-05031-EMC, NDCA. Consulted for plaintiff uCloudlink on infringement and validity. Deposed (3/26/21). Case settled. Virtual SIM technology.

August 2019 – August 2020; June 2021 – Sept 2021 McKool Smith/Irell & Manella
Optis Wireless Technology, LLC et al. v. Apple, Inc., EDTX, Civ No. 2:19-cv-66
Consulted for plaintiff Optis. Infringement and validity analysis/reports, IPR. Deposed 06/01/20 and testified at trial 8/3/20 – 8/9/20. Re-trial for damages 8/10/21 – 8/16/21.

March 2019 – May 2020 Gibson, Dunn, & Crutcher, LLP
Sol IP v. AT&T, Ericsson, Nokia, Verizon, and Sprint, EDTX, Case No. 2:18-cv-526
Consulted for defendants on patents involving LTE downlink cell search and synchronization signaling. Invalidity, non-infringement analysis/reports, claim construction. No deposition, case settled.

2016 – March 2019 Sidley Austin, LLP
Huawei v. Samsung, NDCA
Case No. 3:16-cv-02787-WHO
Consulted for plaintiff Huawei on original complaint and for defendant Huawei on counterclaims on patents involving control channel signaling, network access, and security. Assisted claim construction, IPR petition and preliminary response, wrote validity and non-infringement reports. Deposed 6/20/18, 7/19/18. Case settled.

2016 Russ, August & Kabat
Core Wireless v. Apple, Court of Northern California, Case No. 6:14-cv-752-JDL
Consulted for plaintiff on patents associated with core network signaling. Wrote infringement and validity reports and rebuttals. Performed source code review and conformance testing. Deposed (8/12/2016). Patent was dropped during down-select before trial.

2015 - 2016 Hueston & Hennigan
Core Wireless v. LG Electronics, Court of Eastern Texas, Case No. 2:14-cv-911-JRG-RSP (lead case), Case No. 2:14-cv-912-JRG-RSP (consolidated)
Consulted for plaintiff on patents on cellular user interface. Present at jury trial (3/2016) and participated in mock jury trial (2/10/2016). Wrote rebuttal expert report on validity and deposed (12/11/2015). Wrote infringement report regarding cellular protocols. Performed source code review and conformance testing. Core Wireless prevailed.

2015 Bunsow De Mory Smith & Allison
Core Wireless v. LG Electronics, Court of Eastern Texas, Case No. 2:14-cv-911-JRG-RSP (lead case), Case No. 2:14-cv-912-JRG-RSP (consolidated) and Core Wireless v. Apple, Case No. 6:14-cv-752-JDL
Consulted for plaintiff on patents associated with core network signaling. Wrote declarations on claim construction. Prepared tutorial to be presented to court. Case handed off to Hueston & Hennigan.

Case Testimony History:

October 2024 – Present, Carmichael, IP
Aylo Freesites LTD v. Wellcomemat LLC IPR2024-00710 (IPR)
Consulting for respondent Wellcomemat. Technology related to remote editing of video content. Filed declaration 2/12/25. Deposed 3/13/25.

May 2024 – July 2024, Merchant & Gould
Apex Beam Technologies LLC v. TCT Mobile International Ltd. Case No. 2:21-cv-438-JRG (EDTX); Case Filed 04/22/24. Consulting for defendant TCT. Technology related to signaling in 5G cellular networks. Submitted claim construction declaration 7/17/24. Deposed 7/31/24 on claim construction declaration.

March 2024 – February 2024, Duane Morris
Ericsson and Nokia v. Active Wireless IPR2024-00886, -00951, -00985, -00986
Consulted for petitioners Ericsson and Nokia. Technology related to signaling in 4G and 5G cellular networks. Wrote four declarations for IPR. Deposed 12/4/24.

January 2024 – Present, McKool Smith
Headwater Research, LLC v. AT&T Corp. et al, Case No. 2:23-cv-00398
Consulting for defendant. Technology related to control of battery and data usage in 4G/5G user devices. Filed a rebuttal report 3/13/25. Deposed 3/19/25.

December 2023 – Present, Duane Morris
Ericsson, Inc. and Nokia of America v. XR Communications, LLC, IPR2024-00613 (IPR); Case No. 2:23-CV-00202-JRG-RSP (EDTX). Consulted for petitioners and defendants. Technology related to MIMO in cellular networks. Filed declarations on 3/6/24. Deposed 1/7/25.

October 2023 – April 2024, Erise IP; Finnegan, DLA Piper, Husch Blackwell
BNR v. ASUSTek/Media Tek/Laird/NXP Inc. Inv. No. 337-TA-1367 (USITC). Consulting for defendant ASUS on ASUS (Qualcomm-based products) non-infringement and JDG (ASUS/Media Tek/ Laird/ NXP) on Tech DI non-infringement. Wrote on WiFi wireless devices and semiconductor chips with wireless capabilities related to wireless transmission technologies. Wrote rebuttal report. Deposed 2/8/24. BNR settled with ASUS and Media Tek; BNR withdrew complaint before hearing.

September 2023 – June 2023, Quinn Emanuel, LLP
Google LLC v. Sonos, Inc., Inv. No. 337-TA-1330 (USITC)
Consulting for patent owner Google. Wrote infringement and validity rebuttal reports. Technology related to voice assistants and smart devices. Deposed 4/14/23. Testified 6/20-23/23.

August 2023 – July 2024, McKool Smith
Ericsson v. Lenovo/Motorola, In the Matter of Certain Mobile Phones, Components Thereof, and Products Containing Same, Inv. No. 337-TA-1375 (USITC); IPR204-00702 (IPR)
Consulting for complainant Ericsson on technology related to 5G cellular signaling technology. Wrote infringement and invalidity rebuttal. Deposed 5/23/24. Testified 7/16/24. Wrote IPR declaration filed on 12/6/24. Deposed for IPR 2/12/25.

August 2023 – Present, Caldwell, Cassady and Curry
Neo Wireless, LLC v. Ford, et al., Case No. 2:22-MD-03034. Consulting for plaintiff on technology related to 4G cellular radio access. Wrote infringement and invalidity rebuttal reports. Deposed 5/16/24 and 5/17/24.

November 2022 – April 2023, Finnegan, Henderson, Farabow, Garrett & Dunner, LLP
Qualcomm, Inc. vs. FedEx, Inc., IPR 2022-00585
Consulting for patent owner FedEx. Wrote IPR declaration. Deposed 4/19/23. Technology related to sensor information collected by tracking devices.

September 2022 – November 2023, BC Law Group, P.C.
Apple, Inc., vs. Speir Technologies Limited, IPR2022-01512 and -00151
Consulted for patent owner Speir on UWB localization technology. Wrote IPR declarations. Deposed 10/25/23. Case dismissed 11/18/23.

August 2022 – July 2024, Venable, LLP
VoIP-Pal.com, Inc. v. Verizon Communications Inc. Case No. 6:21-cv-00672, WDTX
Consulting for defendant Verizon. Wrote non-infringement report. Deposed 5/17/23. Technology relates to VoIP in cellular networks. Summary judgement of non-infringement.

July 2022 – November 2023, Quinn Emanuel Urquhart & Sullivan, LLP
Evolved Wireless LLC v. Samsung Electronics Co., Ltd., and Samsung Electronics America, Inc., Case No. 2-21-cv-00033, EDTX. Technology related to handovers in 4G networks.
Consulting for defendant Samsung. Wrote non-infringement and validity rebuttal report. Deposed 7/5/23; Testified at trial 11/14/23. Jury found for defendant on all counts.

March 2022 – December 2022, McKool Smith
Ericsson Inc. and Telefonaktiebolaget LM Ericsson vs. Apple Inc., Inv. No. 337-TA-1299, ITC
Consulting for Ericsson. Opening and Rebuttal report. Deposed 10/7/2022. Testified 12/7/2022. Case settled during trial.

May 2022 – December 2022, McKool Smith; Alston Bird
Ericsson Inc. and Telefonaktiebolaget LM Ericsson vs. Apple Inc., Case No. 2:21-cv-376, EDTX
Consulting for plaintiff and counter-defendant Ericsson.
Report on Essentiality and Rebuttal report. Deposed 10/4/2022. Case settled.

September 2021 – December 2021, Duane Morris, LLP
KAIFI LLC v. Verizon Wireless, Case No. 2:20-cv-280-JRG, EDTX
Consulted for defendant Verizon. Wrote Non-Infringing Alternatives and Non-Infringement reports. Deposed 12/15/21. Case settled.

July 2021 – August 2021, Quinn Emanuel, LLP
Finesse Wireless, LLC v. Nokia, et al., Case No. 2:21-CV-00063-JRG, EDTX
Consulted for defendant Nokia on claim construction. Technology related to noise in the front-end of receiver. Deposed on 8/17/21.

March 2021 – Sept 2021, Wilson Sonsini
Lenovo Holding Co, Inc., et al. v. InterDigital Technology Corp.
IPR. Consulted for InterDigital. Technology related to control signaling in cellular systems. Wrote three declarations. Deposed 7/27/21.

November 2020 – June 2021, Sheppard Mullin
Hong Kong uCloudlink v. SIMO Holdings, Inc. and Skyroam, Inc., Case No. 18-cv-05031-EMC, NDCA. Consulted for plaintiff uCloudlink on infringement and validity. Technology related to virtual SIM. Deposed 3/26/21.

August 2019 – August 2020; June 2021 – Sept 2021 McKool Smith/Irell & Manella
Optis Wireless Technology, LLC et al. v. Apple, Inc., EDTX, Civ No. 2:19-cv-66
SEPs – Consulted for plaintiff Optis on control channel MIMO switching, control channel information fields. Infringement and validity analysis/reports, IPR. Deposed 06/01/20 and testified at trial 8/3/20 – 8/9/20. Testified at re-trial for damages 8/10/21 – 8/16/21.

2016 – March 2019 Sidley Austin, LLP
Huawei v. Samsung, NDCA
Case No. 3:16-cv-02787-WHO
Consulted for plaintiff Huawei on original complaint and for defendant Huawei. Assisted claim construction, IPR petition and preliminary response, wrote validity and non-infringement reports. Deposed 6/20/18, and 7/19/18.

2016 Russ, August & Kabat
Core Wireless v. Apple, Court of Northern California, Case No. 6:14-cv-752-JDL
Consulted for plaintiff on patents associated with core network signaling. Wrote infringement and validity reports and rebuttals. Performed source code review and conformance testing. Deposed (8/12/2016). Patent was dropped during down-select before trial.

2015 - 2016 Hueston & Hennigan
Core Wireless v. LG Electronics, Court of Eastern Texas, Case No. 2:14-cv-911-JRG-RSP (lead case), Case No. 2:14-cv-912-JRG-RSP (consolidated)
Consulted for plaintiff on patents on cellular user interface. Present at jury trial (3/2016) and participated in mock jury trial (2/10/2016). Wrote rebuttal expert report on validity and deposed (12/11/2015). Wrote infringement report regarding cellular protocols. Performed source code review and conformance testing. Core Wireless prevailed.

Teaching:

Courses:

- CSE 516 (Mobile Networks): Redesigned the course to integrate latest developments in mobile network architecture design. The course now includes signaling, control, and protocol issues unique to 4G/5G architectures addressing eMBB, mMTC, and URLLC use cases critical to IoT and future wireless network development and future NG networks.
- CSE 514 (Communication Networks)
- CSE 590 (Colloquium)
- CMPEN 462 (Wireless Communication Systems and Security): Created and designed this course to address a gap in the wireless communications area focusing on security. This course is included in the cybersecurity computational foundations minor.
- EE 466 (Introduction to Software-Defined Radio: Overview of the principles of software-defined radio systems with laboratory components.
- EE 456 (Introduction to Neural Networks): This course is intended to address the need for EE and CMPEN students to be exposed to the principles associated with artificial intelligence.
- CMPEN/EE 362 (Communication Networks)
- CMPSC 263 (Blockchains and Modern Web Development): This course is 'module' driven and designed to provide students with a broad range of academic backgrounds an opportunity to learn about blockchains and cryptography. Under supervision, students in the Distributed Ledger Society teach the modules including theory and practice in the areas of programming, math, and cryptography.
- ACS 505 (Experimental Techniques in Acoustics)
- MATH 141 (Calculus with Analytical Geometry II)
- CMPSC 101 (Programming in C++)

Publications:

Rublein, Mehmeti, Mahon, and LaPorta, "Impact of Client Choice on Distributed Resource Allocation in Edge Computing", *The 33rd International Conference on Computer Communications and Networks (ICCCN 2024),* IEEE and IEEE Communication Society, July 29 – 31, 2024, Big Island, Hawaii, USA.

Rublein, Mehmeti, Mahon, and LaPorta, "Improved Methods of Task Assignment and Resource Allocation with Preemption in Edge Computing Systems", *IEEE Transactions on Parallel and Distributed Computing.* Submitted July 2023.

Sorensen, Mahon, Mehmeti, and LaPorta, QoE-Analysis of 5G Network Resource Allocation Schemes for Competitive Multi-User Video Streaming Applications, *IEEE Conference on Vehicular Technology,* Florence, Italy, June 2023.

Sorensen, Mehmeti, Mahon, LaPorta, and Cao, "EQMS: An Improved Energy-Aware and QOE-aware Video Streaming Policy across Multiple Competitive Mobile Devices", Wireless Networks: The Journal of Mobile Communication, Computation and Information, Dec. 2022.

Sorensen, Mehmeti, Mahon, Qui, Chan, Qui, and LaPorta, "Optimal Resource Allocation for Crowdsourced Image Processing", *IEEE Transactions on Mobile Computing*. June 2022.

Sorensen, Mehmeti, Mahon, La Porta, Cao, "Mutli-User Competitive Energy-Aware and QoE-Aware Video Streaming on Mobile Devices", *ACM Proceedings of the QoS and Security for Wireless and Mobile Networks (Q2SWinet) Symposium collocated with Modeling, Analysis, and Simulation of Wireless and Mobile Systems* (MSWIM 2020), Alicante, Spain, Nov. 2020.

Sorensen, Mehmeti, Mahon, Qui, Chan, and LaPorta, "Optimal Resource Allocation for Crowdsourced Image Processing", *IEEE International Conference on Sensing and Networking* (IEEE SECON 2020), Como, Italy, June 2020.

Swanson, Mahon, Norris, and Mast, "Atmospheric Multipath Resolution Using Spread Spectrum Acoustic Signals", *Proceedings of Meetings on Acoustics,* September 2017.

Aquaviva, Mahon, Einfalt, and LaPorta, "Optimal Cyber-Defense Strategies for Advanced Persistent Threats: A Game Theoretic Approach," *2017 International Symposium on Reliable and Distributed Systems,* Hong Kong, China, September 27 – 29, 2017

Young, Mahon, and Wyckoff, "Automated Information Management," Chap. 12, *Mathematical Techniques in Multisensor Data Fusion,* Hall, David L., Artech House Inc., Mar 2004

Mahon, Sonsteby, and Wenchel, "Application of Non-Orthogonal Waveletes for Geolocation," *Radiolocation and Direction Finding Symposium*, Southwest Research Institute, San Antonio, Texas, 2-4 Nov. 1999.

Myers, Lovette, Kilgus, Giannini, Swanson, Reichard, Mahon, Mast, "A Java-based Information System for Wayside Sensing and Control," *Proc. of the 1998 ASME/IEEE Joint Railroad Conference,* 1998, pp. 135-147.

Swanson, Mast, Mahon, "Atmospheric Multipath Resolution Using Spread Spectrum Acoustic Signals," *Proceedings of the 133rd Meeting of the ASA*, June 15-20, 1997.

Mahon, Swanson, "Acoustic Holography as an Active Control Measurement Tool," *Proceedings of Active 95, The 1995 International Symposium on Active Control of Sound and Vibration,* Newport Beach, CA, July 1995, pp. 673-684.

Mahon, Sibul, Valenzuela, "A Sliding Window Update for the Basis Matrix of the QR Decomposition," IEEE Transactions on Signal Processing, May 1993, pp. 1951-1953.

Mahon, Sibul, Valenzuela, "An Alternative Updating Scheme for the QR Algorithm as Applied to Adaptive Beamforming," *Proc. 25th Annual Conf. on Info. Sciences and Systems,* Johns Hopkins University, Baltimore, MD, March 1991, pp. 193-199.

Awards/Honors:

Senior Member IEEE

2001 Formal citation letter from National Reconnaissance Office (NRO) for experimental work with mobile wireless systems

2001 Formal citation letter for excellence in software development from the NRO for work associated with mobile wireless systems.

2000 Formal citation letter from NRO for development of wavelet course presented at NRO Technology Symposium

1997 Invited session chair of "Signal Processing in Acoustics: General Signal Processing," Noise-Con '97, 133rd meeting of the ASA.

1996 Simowitz Citation Acoustics Department PSU for outstanding publication by a graduate student

1995 Invited co-chair of "Transducers for Active Control of Sound and Vibration," Active 95, Active Noise Control Conference

1993 Simowitz Award Acoustics Department PSU for outstanding publication by a graduate student

1987 Dr. A. J. Cawley Award for Excellence in Electronics Engineering by Physics/EE Department University of Scranton