Supplemental Translation Declaration

I, Frank McGee, do hereby declare as follows:

1. I am fluent in both the English and Japanese languages and have worked as a Japanese to English translator for over 30 years.

2. Attached hereto as Exhibit A is a true and accurate copy of my current C.V., which truthfully and accurately details my qualifications and experience as a Japanese to English translator.

3. I prepared the translations, attached hereto as Exhibit B, while located within the United States. I regularly conduct such activities on behalf of Sun IP LLC within the United States.

4. I certify that the attached translations in Exhibit B are true, full and accurate Japanese to English translations of the documents of Exhibit C.

5. I declare that all statements made herein of my own knowledge are true and that all statements made on information and belief are believed to be true; and that these statements were made with knowledge that willful false statements and the like so made are punishable by fine or imprisonment, or both, under the laws of the United States, including 18 U.S.C. § 1001.

6. Additionally, I further declare under penalty of perjury that the foregoing is true and correct.

Signature:

Name: Frank McGee

Title: Translator, Sun IP, LLC

Date Executed: February 4, 2025

EXHIBIT A

Frank McGee
Japanese>English IP Translator

2 Birch Road, Wolfeboro, NH 03894 USA
Telephone: (603) 569-9741
email: fmcgee311@gmail.com

Technical, Legal & Business Translator

Full-time freelance legal and technical translator for top language service providers worldwide. Technical translation experience includes patents and related documents in the fields of computer hardware, consumer electronics, telecommunications, semiconductors, automotive technologies, robotics, production equipment, medical equipment, material sciences, chemicals, and pharmaceuticals—among others. Many of my translations have been used in patent litigation. Nearly all of my business is the translation of patents and related documentation into English. More than one million words per year over the last 15 years. 1995-present.

Foreign Language Services (United States Patent and Trademark Office subcontractor). Independent Contractor. Huntsville, AL, USA. Translated unexamined patent applications and granted patent applications for use by patent examiners at the USPTO. More than half a million words per year over the final seven years that I worked for them. 1995-2011.

Foreign Broadcast Information Service. Independent Contractor. Arlington, VA, USA. Translated business journal articles, government reports and independent assessments of Japanese real estate and financial markets, the Japanese banking and securities industries, and Japanese fiscal policy. 1989-1995.

Sony Corporation. Member of Corporate Communications Office. Tokyo, Japan. Wrote and translated product manuals, technical literature on consumer electronics, semiconductors and computer equipment, press releases and promotional materials. 1987-1989.

Bridgestone Corporation. Member of Public Relations Department. Tokyo, Japan. Wrote and translated product manuals, technical literature on automotive components, press releases and promotional materials. 1985-1987.

Professional Affiliations and Accreditation

- Member, American Translators Association, Japanese Language Division.
- Japanese-Language Proficiency Test (Level I), Japanese Ministry of Education, 1988.

Education

- PhD Candidate, East Asian Languages, University of Chicago, 1991-1995.
- Visiting Scholar, East Asian Languages, Harvard University, 1993-1994.
- MA East Asian Languages, University of Chicago, 1993.
- BA English with Minor in Japanese, Colgate University, 1985.

Expertise

- Ten years of formal study of Japanese
- Training in Japanese legal translation, University of Chicago Law School, 1993.
- Well-versed in patent terminology and patent searches.

EXHIBIT B

(19) Japan Patent Office (JP)

(12) Gazette of Unexamined Patent Applications (A)

(11) Publication Number 2005-330867 (P2005-330867A)

(43) Publication Date December 2, 2005 (2005.12.2)

(51) Int.Cl.[7]	FI		Theme Codes (Ref.)
F02M 21/06	F02M 21/06	F	
F02M 21/02	F02M 21/06	A	
	F02M 21/02	N	
	F02M 21/02	301A	

Examination Request Not Yet Received No. of Claims 2 OL (Total of 10 Pages)

(21) Application No. 2004-149051 (P2004-149051)
(22) Filing Date May 19, 2004 (2004.5.19)

(71) Applicant 390008877
Walbro Japan Ltd.
1-15-1, Kaigan, Minato-ku, Tokyo

(74) Agent 100089266
Attorney Yoichi OSHIMA

(72) Inventor Kazuto FUJISAWA
Walbro Japan Ltd.
2-3-3, Shibakoen, Minato-ku, Tokyo

(54) [Title of the Invention] Supply Switching Device for Different Liquefied Gas Fuels

(57) [Abstract]

[Problem] To provide a supply switching device for different liquefied gas fuels that has a compact structure, that is capable of using different liquefied gas fuels, and that is easy to operate.

[Solution] The coil end of a compression coil spring 21 that resiliently biases the diaphragm 19 in a primary fuel chamber 20 for a regulator is selectively brought into contact with the outer circumferential surface of a cam body 33 and a cam surface 33a to change the fuel pressure, a fuel switching cock 6 is composed of a cam body with two pipes 41a, 41b, and a cock casing 41 with pipes 41a, 41b connected, respectively, to a propane fuel tank and a butane fuel tank, and rotation of the cam body switches the supply of each fuel to an engine 1. This makes it possible to use different liquefied gas fuels with a compact structure, and by linking a fuel switching means with a fuel pressure change setting means, it is possible to select the fuel and set the corresponding fuel pressure at the same time simply by switching the fuel switching means, thus making operation easier.

[Selected Drawing] FIG. 2

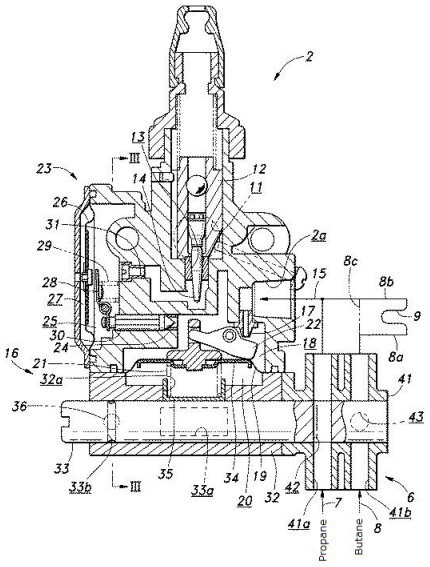

[Claims]

[Claim 1]

A supply switching device for different liquefied gas fuels, comprising: a regulator installed in a fuel system for an engine that uses liquefied gas fuels of different calorific values; a fuel pressure changing means for increasing the fuel pressure in a fuel chamber of the regulator when using a low calorific value fuel and decreasing the fuel pressure in a fuel chamber of the regulator when using high calorific value fuel; and a fuel switching means for switching the connection state between tanks of low calorific value fuel and high calorific value fuel and the regulator in a single operation, wherein the fuel pressure is changed by the fuel pressure changing means in response to a switching operation by the fuel switching means.

[Claim 2]

The supply switching device for different liquefied gas fuels according to claim 1, wherein the fuel pressure changing means comprises a diaphragm that forms a portion of a wall of the fuel chamber, a spring that elastically presses the diaphragm in the direction of applying pressure to the fuel in the fuel chamber, and a cam body with a cam surface that is in contact with the spring on the side opposite the diaphragm side, and the switching operation of the fuel switching means and rotation of the cam body are linked.

[Detailed Description of the Invention]

[Technical Field]

[0001]

The present invention relates to a supply switching device for different liquefied gas fuels that can be used in an internal combustion engine that uses different liquefied gas fuels.

[Background Art]

[0002]

There are internal combustion engines that use liquefied gas fuels such as propane and butane. The amount of fuel required for combustion in such an engine differs because the calorific value per unit volume differs for each type of fuel. Therefore, when butane fuel is used with a regulator set for propane fuel, the fuel supply will become too rich, and when propane fuel is used with a regulator set for butane fuel, the fuel supply will be too lean. In both cases, engine operation is impaired and different types of liquefied gas fuels cannot be used with the same regulator.

[0003]

However, since the prior art does not relate to any invention publicly known in the literature, there is no prior art literature to be disclosed.

[Disclosure of the Invention]

[Problem to Be Solved by the Invention]

[0004]

Among the propane and butane fuels mentioned above, propane fuel is inexpensive and is stored in large cylinders for use, and may be used as fuel in engines for generators that are used as auxiliary equipment in homes. Since the engine is installed in a fixed position, propane fuel stored in large cylinders is preferred for such uses due to the low fuel cost.

[0005]

However, some engines for generators are portable and can be used outdoors. When using such a portable engine outdoors, it is necessary to carry along a large cylinder of propane, which made it difficult to use. When used in a specific location, the fuel may run out during use if the amount of propane fuel stored in the large tank is low. In such a case, it is necessary to ask a supplier for refueling, and since refueling cannot be carried out immediately, the remaining amount of fuel must be carefully managed.

[0006]

In contrast, butane fuel is relatively easy to obtain because it is sold in small cylinders. In addition, since it is a fuel for tabletop stoves that is easily used at home, it is more likely that a refill is in storage. Therefore, butane fuel stored in such a small cylinder, which is easy to obtain and store, can be used as an alternative fuel to propane fuel when the portable engine is used outdoors or when the engine runs out of fuel. This is desirable because it can improve the ease of use and eliminate inconvenience.

[0007]

In order to use different types of liquefied gas fuels, separate regulators can be provided for each fuel and used depending on the situation. However, this would mean equipping the engine with two liquefied gas fuel supplying devices, which would make the engine larger and more inconvenient. Also, a fuel switching device such as a cock must be provided to switch between different fuels, but operation becomes complicated because the fuel switching device must be switched according to the regulator that is being used.

[Means for Solving the Problem]

[0008]

In order to solve this problem and realize a switching supply device for different liquefied gas fuels that is compact in structure, that can use different liquefied gas fuels, and that is easy to operate, the present invention comprises a fuel switching means for switching between a low calorific value fuel and a high calorific value fuel and supplying the fuel to an engine using different liquefied gas fuels with different calorific values; and a fuel pressure change setting means for setting a high fuel pressure in a fuel chamber of the regulator when a low calorific value fuel is used, and for setting a low fuel pressure in the fuel chamber when a high calorific value fuel is used, wherein the fuel pressure setting change by the fuel pressure change setting means is linked to switching of the fuel switching means.

[0009]

Optionally, the fuel pressure changing means comprises a diaphragm that forms a portion of a wall of the fuel chamber, a spring that elastically presses the diaphragm in the direction of applying pressure to the fuel in the fuel chamber, and a cam body with a cam surface that is in contact with the spring on the side opposite the diaphragm side, and the switching operation of the fuel switching means and rotation of the cam body are linked.

[Effects of the Invention]

[0010]

In claim 1 of the present invention, a fuel switching means for switching the fuel supplied to the engine and a fuel pressure change setting means for changing the fuel pressure in the regulator are provided, so that low calorific value fuel and high calorific value fuel can be used selectively. As a result, fuels with different calorific values can be used in an internal combustion engine with a single regulator. In this way, different types of liquefied gas fuels can be used in an engine with a compact structure. By linking the fuel switching means with the fuel pressure change setting means, it is possible to simultaneously select a fuel and set a fuel pressure corresponding to the selected fuel simply by switching the fuel switching means. This greatly simplifies the operation.

[0011]

In particular, because the fuel pressure changing means comprises a diaphragm and a spring and a spring load changing means that changes the elastic force of the spring, the fuel pressure can be changed by changing the biasing force of the diaphragm applied to the fuel in the fuel chamber using a simple structure to change the elastic biasing force of the spring. By providing a cam body with a spring in contact with a cam surface, it is possible to change the fuel pressure using a simple structure, for example, by rotating the cam body. Therefore, by linking the rotation of the cam body to the switching operation of the fuel switching means, it is possible to link the switching of the fuel and the switching of the fuel pressure using a simple structure.

[Best Mode for Carrying Out the Invention]

[0012]

An embodiment of the present invention will now be described with reference to the drawings. FIG. 1 is a schematic diagram of an internal combustion engine 1 for a power generator to which the present invention has been applied. In FIG. 1, a fuel supplying device 2 is provided at the appropriate position in the internal combustion engine 1, and liquefied gas fuel is supplied to an intake pipe 3 by the fuel supplying device 2 at an appropriate fuel pressure.

[0013]

For example, a large propane fuel tank 4 can be installed outside the internal combustion engine 1 to store propane as a low calorific value fuel, and a small butane fuel tank 5 can be installed to store butane as a high calorific value fuel. In the example depicted here, a fuel switching cock 6 is integrally provided as a fuel switching means in the fuel supplying device 2. The fuel switching cock 6 is connected to the propane fuel tank 4 via a propane fuel pipe 7 and to the butane fuel tank 5 via a butane fuel pipe 8. In addition, the fuel switching cock 6 is connected to pipes 8a and 8b, which are connected in turn to the inlet and outlet of a heat receiving pipe 9 piped along cooling fins of the cylinder block to improve the cold-starting performance of the engine.

[0014]

As shown in FIG. 2, the middle of the fuel supplying device 2 is provided with an intake passage 11 connecting with an intake pipe 3 and a sliding throttle valve 12 that can slide in a direction that intersects the intake passage 11 in the vertical direction of the figure. A portion of the intake passage 11 forming the bottom surface in the figure is provided with a fuel outlet 13 that opens on the same axis as the sliding throttle valve 12. A fuel level metering needle valve 14, which is coaxial with the sliding throttle valve 12 and protrudes downward in the figure, slidably enters the fuel outlet 13. The sliding throttle valve body 12 is spring-loaded with a predetermined elastic biasing force in the direction of entry of the fuel level metering needle valve 14 into the fuel outlet 13. The shape of the tip of the fuel level metering needle valve 14 is such that it completely blocks the fuel outlet 13 when it has fully entered the fuel outlet 13, and such that the gap between the fuel outlet 13 and the tip of the valve becomes larger as the valve moves away from the maximum entry state (moving in the opposite direction).

[0015]

In addition, the body of the fuel supplying device 2 has a fuel inlet 2a, to which a single common fuel pipe 15 from the fuel switching cock 6 is connected. The fuel that flows into the fuel supplying device 2 from the fuel inlet 2a enters the primary fuel chamber 18 via a through-hole in the axial direction of the fuel control valve seat 17 of the primary regulator 16. A diaphragm 19 is provided in a portion of the wall forming the primary fuel chamber 18, and an atmospheric pressure chamber 20 is provided on the side of the diaphragm 19 opposite the primary fuel chamber 18. The diaphragm 19 is constantly biased by a compression coil spring 21 inside the atmospheric pressure chamber 20, and the bias is directed towards the primary fuel chamber 18.

[0016]

A fuel valve opening/closing lever 22 is pivotally mounted in the primary fuel chamber 18, and one end of the fuel valve opening/closing lever 22 is connected to the center of the diaphragm 19. The other end of the fuel valve opening/closing lever 22 is designed to open and close the through-hole in the axial direction of the fuel control valve seat 17 in response to the swinging motion of the fuel valve opening/closing lever 22. The primary regulator 16 is configured in this way.

[0017]

A secondary fuel chamber 25 connects with the primary fuel chamber 18 via a through-hole in the axial direction of the secondary fuel control valve seat 24 of the secondary regulator 23. In this secondary fuel chamber 25, a diaphragm 26 is provided in a portion of the wall surface, and an atmospheric pressure chamber 27 is provided on the side of the diaphragm 26 that is opposite the secondary fuel chamber 25. In addition, a secondary fuel valve opening/closing lever 28 pivots freely inside the secondary fuel chamber 25.

[0018]

The secondary fuel valve opening/closing lever 28 is biased by a compression coil spring 29 so that one end of it strikes the center of the diaphragm 26. A valve body 30 is connected at the other end of the secondary fuel valve opening/closing lever 28 that can be freely displaced in the axial direction to open and close the through-hole in the axial direction of the secondary fuel control opening/closing valve seat 24. The through-hole in the axial direction of the secondary fuel control opening/closing valve seat 24 is closed by a valve body 30 with the secondary fuel valve opening/closing lever 28 rotated in the biasing direction of the compression coil spring 29, and the valve opens when the secondary fuel valve opening/closing lever 28 is turned in the direction that opposes the biasing force. The secondary regulator 23 is configured in this way.

[0019]

The secondary fuel chamber 25 connects with the chamber on the opposite side of the intake passage 11 of the fuel outlet 13 via a fuel control jet 31. The liquefied gas fuel sent to the fuel supplying device 2 is regulated by the primary regulator 16 and the secondary regulator 23. The flow rate is regulated by the fuel control jet 31, and the fuel is sprayed into the intake passage 11 according to the opening degree of the fuel level metering needle valve 14 relative to the fuel outlet 13.

[0020]

In this fuel supplying device 2, a lower casing 32 is provided in the lower portion of the device, as shown in FIG. 2, to form the atmospheric pressure chamber 20 described above. In the lower casing 32, a cylindrical cam body 33 is provided as a spring load varying means, which is rotatable around its axis in a direction that is orthogonal to the axial direction of the compression coil spring 21 in the primary regulator 16.

[0021]

The coil end on the diaphragm 19 side, which is one end of the compression coil spring 21 in the load direction, is supported by a spring seat 34 integrated with the diaphragm 19. In addition, a guide hole 32a is formed in the wall between the atmospheric pressure chamber 20 and the cam body 33 in the lower casing 32, which passes from the atmospheric pressure chamber 20 to the outer circumference of the cam body 33. The spring seat 35, which supports the coil end on the side opposite to the diaphragm 19, which is the other end of the compression coil spring 21 in the load direction, is supported in a sliding manner in the axial direction of the compression coil spring 21. In addition, the spring seat 35 is in contact with the outer circumference of the cam body 33.

[0022]

A cam surface 33a with a D-shaped cross-section is formed on the outer circumferential surface of the cam body 33, which is concave in the radial direction and can receive the spring seat 35 so that it can come into contact with the bottom surface of the spring seat 35. In addition, a circumferential groove

33b is formed on part of the outer circumferential surface of the cam body 33, and as can be seen in FIG. 3, a ball 36 that can move in the radial direction of the cam body 33 is provided in the lower casing 32 at a position corresponding to the circumferential groove 33b. The ball 36 is biased by the compression coil spring 37 so that part of it protrudes into the circumferential groove 33b. This positions it in the axial direction of the cam body 33. In circumferential groove 33b, there are also two positioning holes 33c with a V-shaped cross-section in which the ball 36 can be inserted more deeply to secure engagement. In the example shown here, the holes are positioned 90 degrees apart in the circumferential direction.

[0023]

In the depicted example, when the cam body 33 is turned using a tool such as a flathead screwdriver, a click occurs at the position where it has been turned 90 degrees due to the elastic engagement of the ball 36 with positioning hole 33c. The cam body 33 can be stopped at each predetermined position. The positioning means works in this way. The cam surface 33a is provided in a position that is aligned with the spring seat 35 when the cam body 33 stops at one of the predetermined positions.

[0024]

In a fuel supplying device 2 configured in this way, the cam body 33 is turned so that the compression coil spring 21 enters a high-compression, high-bias state when the spring seat 35 comes into contact with the outer circumferential surface of the cam body 33, as shown in FIG. 2, and so that the compression coil spring 21 enters a low-compression, low-bias state when the spring seat 35 comes into contact with the cam surface 33a, as shown in FIG. 4. A fuel pressure varying means is constructed using the cam body 33 in this way.

[0025]

In the high-compression state, high-bias state shown in FIG. 2, the fuel pressure of the primary regulator 16 is high, so that the amount of fuel supplied from the secondary regulator 23 is high. At this setting, sufficient propane fuel can be supplied to the internal combustion engine 1 when configured to use propane fuel. Meanwhile, in the low-compression state, low-bias state shown in FIG. 4, the fuel pressure of the primary regulator 16 is low, so that the amount of fuel supplied from the secondary regulator 23 is low. Thus, when butane fuel, which has a higher calorific value per volume than propane fuel, is used in the internal combustion engine 1, its use does not cause any problems with the operation of the engine.

[0026]

In the present invention, switching is done in a single action (rotation). In the depicted example, as shown in FIG. 2, the axial end of the cam body 33 that is opposite to the end operated by the tool extends outward from the lower casing 32, and the cock casing 41 receiving the extended portion is integrally fixed to the lower casing 32. In the extended portion of the cam body 33, two through-holes 42 and 43 are formed that are orthogonal to the axis and offset from each other by 90 degrees. Formed in the cock casing 41 are a propane pipeline 41a connected to the propane fuel pipe 7 and a butane pipeline 41b connected to the butane fuel pipe 8, which are formed in parallel to each other and in positions corresponding, respectively, to through-holes 42 and 43. The other end of the propane pipeline 41a connects with the common fuel pipe 15 described above via a piping joint, etc. (not shown), and the other end of the butane pipeline 41b connects with the piping 8a described above. If it is not necessary to heat the butane fuel via a heat receiving pipe 9, it can be connected directly to the common fuel pipe 15 via the piping 8c indicated by the virtual lines in FIG. 2 and FIG. 4.

[0027]

Due to the relationship between the through-holes 42, 43 and the pipes 41a, 41b, one of the through-holes 42 and the propane pipeline 41a connect at one of the 90-degree intervals of the cam body 33, as shown in FIG. 2. In this state, the other through-hole 43 is not aligned with the butane pipeline 41b, so the butane pipeline 41b is shut off. This allows only propane fuel to be sent to the fuel supplying device 2 via the fuel switching cock 6. In this case, as mentioned above, because the compression coil

spring 21 comes into contact with the outer circumferential surface of the cam body 33 via the spring seat 35, the biasing force becomes stronger and a fuel pressure suitable for using propane fuel as a low calorific value fuel can be obtained.

[0028]

By rotating the cam body 33 by 90 degrees in the direction indicated by arrow A in FIG. 3 from the state shown in FIG. 2, the cam body is positioned at the other positioning position as shown in FIG. 4. In this case, one through-hole 43 connects with the butane pipeline 41b, and the other through-hole 42 is no longer aligned with the propane pipeline 41a, so the propane pipeline 41a is shut off and only butane fuel is sent to the fuel supplying device 2 via the fuel switching cock 6. Here, as mentioned above, because the compression coil spring 21 comes into contact with the cam surface 33a of the cam body 33 via the spring seat 35, the biasing force is weaker than when propane is used, and the fuel pressure suitably adjusted for using butane fuel, which has a high calorific value, in a propane engine.

[0029]

In the depicted example, the through-holes 42, 43 are offset by 90 degrees from each other, and the pipes 41a, 41b are arranged parallel to each other. However, it is also possible to arrange the through-holes 42, 43 parallel to each other, and offset the pipes 41a, 41b by 90 degrees from each other.

[0030]

By turning the cam body 33 in this way, a different fuel can be selected and the fuel pressure can be set to match that fuel. This improves the operability of a fuel supplying device that can use different types of fuel. In addition, the risk of setting the wrong fuel pressure when switching fuels can be eliminated, which sometimes occurs when switching the fuel is separate from setting fuel pressure. In this way, engine malfunctions can be reliably avoided.

[0031]

The fuel switching means in the present invention is not limited to the fuel switching cock 6 shown in the depicted example. FIG. 5 shows another example. In the fuel cock 51 shown in FIG. 5, the casing body is formed by stacking a block-shaped upper casing 52 and lower casing 53. The lower casing 53 is provided with a propane gas fuel inlet 53a to which a propane fuel pipe 7 is connected, and a butane gas fuel inlet 53b to which a butane fuel pipe 8 is connected. There is also a single common fuel outlet 53c connected to the fuel inlet 2a via a common fuel pipe 15.

[0032]

A valve seat 54a and a valve body 55a for opening and closing the valve seat 54a are arranged between the propane gas fuel inlet 53a and the fuel outlet 53c. The valve body 55a is biased by a valve closing spring 56 in the direction that closes the valve seat 54a. Similarly, a valve seat 54b and a valve body 55b that opens and closes the valve seat 54b are arranged between the butane gas fuel inlet 53b and the fuel outlet 53c, and the valve body 55b is biased by a valve closing spring 56 in the direction that closes the valve seat 54b.

[0033]

The casing entering ends of the cam follower rods 57a, 57b, which are supported by the upper casing 52 so as to move freely in the axial direction, are in contact with the valve closing ends of the valve bodies 55a, 55b. Each cam follower rod 57a, 57b is biased in the valve closing direction by a return spring 58.

[0034]

The axial end (outwardly protruding end) of each cam follower rod 57a, 57b on the side opposite the valve bodies 55a, 55b protrudes from the top surface of the upper casing 52. In addition, a flat cylindrical cam body 59 is provided above the upper casing 52, and is rotatably supported by the upper casing 52.

A cam surface 59a that is in contact with the outwardly protruding ends of each cam follower rod 57a, 57b is formed on the lower surface of the cam body 59 facing the upper surface of the upper casing 52. In addition, a rotary knob 60 that is integrated with the cam body 59 is provided on the upper surface of the cam body 59.

[0035]

The cam surface 59a, for example, can be formed with a stopper surface portion that regulates the maximum protrusion position of the cam follower rods 57a, 57b in the valve closing direction as depicted, a pair of inclined surface portions that guide the cam follower rod 57a on one side (the propane side) in the push-in direction when the knob 60 is grasped and turned in the direction of arrow B in the figure and that guide the cam follower rod 57b on the other side (the butane side) in the push-in direction when the knob is turned in the direction of arrow C in the figure, and a valve position holding surface portion that holds the cam follower rods 57a, 57b in position after they have overcome each inclined surface portion.

[0036]

In addition, a wire 61 is wound around the outer circumference of the cam body 59 at a prescribed angle of rotation. In the depicted example, a circumferential groove of a predetermined depth is formed in the radial direction on the cam body 59, and a wire 61 is wound around the bottom of the groove. The free end of the wire 61 is wrapped around and connected to a pulley 62, which is fixed coaxially to the cam body 33 of the fuel supplying device 2, as shown in FIG. 6. The pulley 62 is biased in the tensioning direction of the wire 61, for example, by a torsion spring 63.

[0037]

When a fuel switching cock 51 thus configured is used in this way, in the state shown in FIG. 5, both cam follower rods 57a, 57b are in their maximum protrusion positions in the valve closing direction, and as a result, both valve bodies 55a, 55b are in the closed valve state, making it possible to stop each type of fuel with the fuel switching cock 51 when the engine is stopped. When using propane fuel, the rotary knob 60 is turned in the direction of arrow B in FIG. 5. This causes the cam follower rod 57a on the propane side to be pushed down by the cam surface 59a, and the valve body 55a to be pushed down against the biasing force of the valve closing spring 56, opening the valve body 55a. This allows the propane fuel pipe 7 to connect with the fuel outlet 53c, so that propane fuel is supplied to the engine 1. The height of the bottom surface of the cam body 59, which is in sliding contact with the cam follower rod 57b on the butane side, is set at a certain level to maintain the closed valve state, and as a result, the butane valve 55b remains in a closed valve state and butane fuel is not supplied to the engine 1.

[0038]

Meanwhile, when using butane fuel, the rotary knob 60 is turned in the direction of arrow C in FIG. 5, which is the opposite direction. As a result, the cam follower rod 57b on the butane side is pushed down by the cam surface 59a, and the valve seat 54b is opened in the same way as above. In this case, too, the cam action on the cam follower rod 57a on the propane side is set to close the valve in the same way as above, and only butane fuel is supplied to the engine 1.

[0039]

In addition, the cam body 59 of the fuel switching cock 51 is connected to the cam body 33 of the fuel supplying device 2 via the wire 61, and the cam body 33 rotates in conjunction with the rotation of the cam body 59. Regarding the link between the cam bodies 59, 33, the ratio between the radius of the cam body 59 and the radius of the pulley 62 may be determined so that the cam body 33 is positioned as shown in FIG. 2 when the rotary knob 60 is turned to a position where the valve 55a on the propane side is in the open position, and the cam body 33 is positioned as shown in FIG. 4 when the rotary knob 60 is turned to a position where the valve 55b on the butane side is in the open position.

[0040]

In this way, it is possible to switch the fuel and set the fuel pressure in a single action simply by turning a rotary knob 60, and the operations and effects are the same as those described above.

[0041]

In an internal combustion engine 1 that is based on the use of propane fuel, propane fuel stored in a large cylinder is used when the engine is installed in a stationary state in a house or some other building, and butane fuel stored in a small easy-to-carry cylinder is used when the engine is carried and used outside. Also, if the propane runs out while the engine is being used, it is possible to use butane fuel for a household stove, which is easy to obtain, increasing convenience. These uses can be performed with a single fuel supplying device 2 that has a simple structure, as described above, without having to install a fuel supplying device for each type of fuel. As a result, a fuel supplying device can be provided that is inexpensive and readily allows for the use of different types of fuel. In addition, the fuel can be switched and the corresponding fuel pressure set in a single operation, making it easy to operate.

[Detailed Description of the Drawings]

[0042]

[FIG. 1] FIG. 1 is a schematic diagram of the overall structure of an internal combustion engine 1 for a power generator to which the present invention has been applied.

[FIG. 2] FIG. 2 is a vertical cross-sectional view of a fuel supplying device to which the present invention has been applied.

[FIG. 3] FIG. 3 is a cross-sectional view of the main portion of the device viewed from arrows III-III in FIG. 2.

[FIG. 4] FIG. 4 is a diagram corresponding to FIG. 2, switched to the state in which high calorific value fuel is used.

[FIG. 5] FIG. 5 is a vertical cross-sectional view of a switching cock in a second example.

[FIG. 6] FIG. 6 is a diagram corresponding to FIG. 2, showing the second example.

[Reference Numbers]

[0043]

1: Internal combustion engine
2: Fuel supplying device
4: Propane fuel tank
5: Butane fuel tank
6: Fuel switching cock
7: Propane fuel pipe
8: Butane fuel pipe
161: Subsequent regulator
181: Subsequent fuel chamber
19: Diaphragm
20: Atmospheric pressure chamber
21: Compression coil spring
33: Cam body
33a: Cam surface
33b: Circumferential groove
33c: Positioning hole
36: Ball
37: Compression coil spring
41: Cock casing
41a: Propane pipeline

41b: Butane pipeline
42, 43: Through-hole
51: Fuel switching cock
53a: Propane gas fuel inlet
53b: Butane gas fuel inlet
53c: Fuel outlet
54a, 54b: Valve seat
55a, 55b: Valve body
57a, 57b: Cam follower rod
59: Cam body
59a: Cam surface
61: Wire
62 Pulley

[FIG. 1]

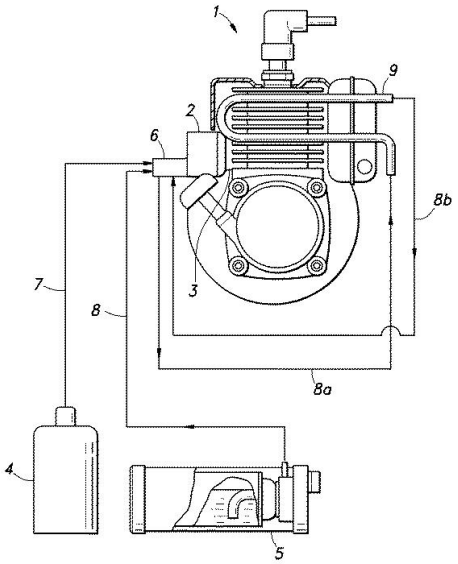

[FIG. 2]

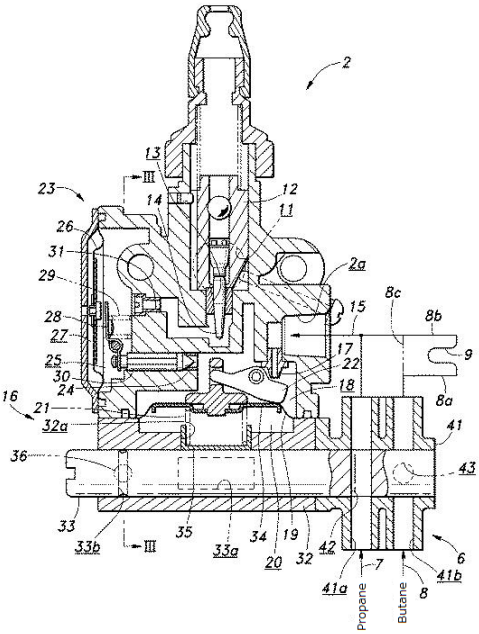

[FIG. 3]

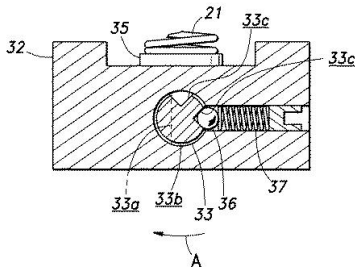

[FIG. 4]

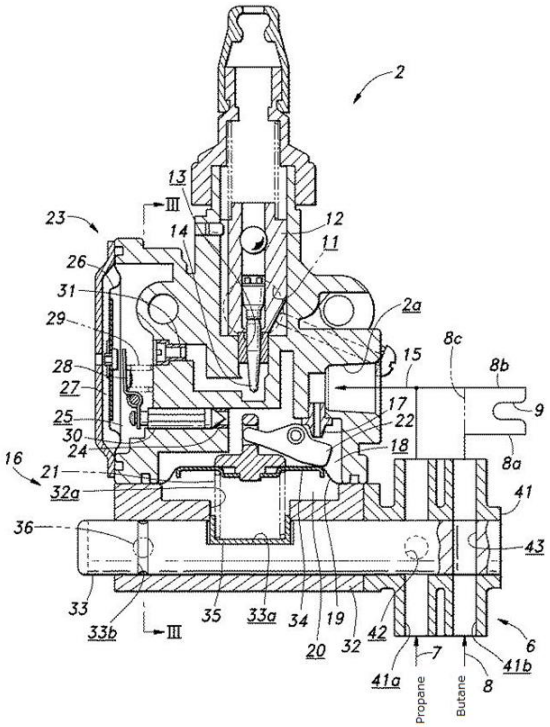

[FIG. 5]

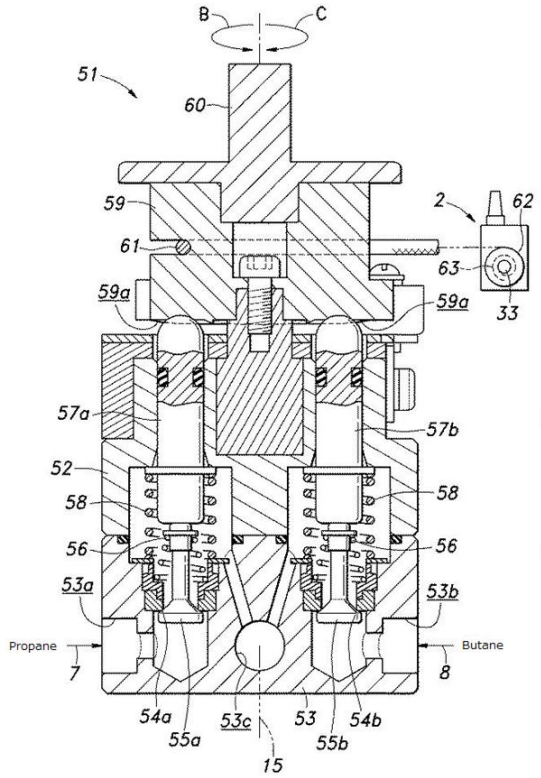
B
C
51
60
59
2
62
61
63
59a
59a
33
57a
57b
52
58
58
56
56
53a
53b
Propane
Butane
7
8
54a
55a
53c
53
55b
54b
15

[FIG. 6]

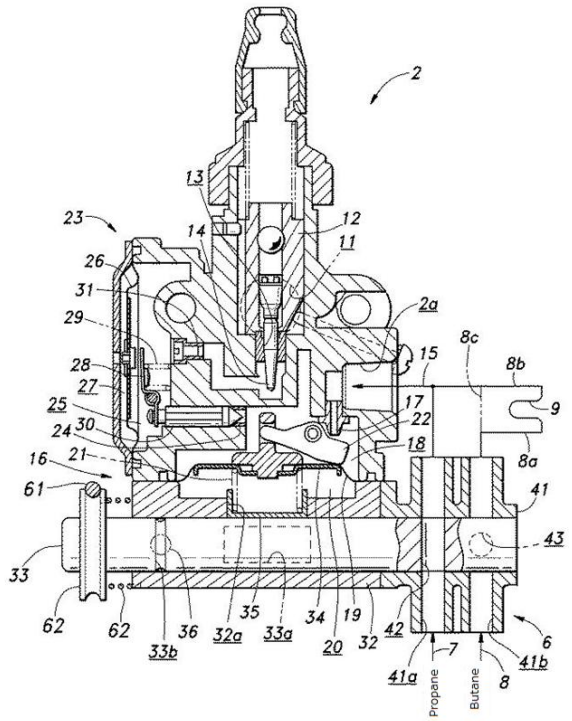
2
13
23
14
12
11
26
31
2a
29
15
8c
8b
28
27
17
9
25
22
24
30
18
8a
16
21
61
41
43
33
62
62
36
35
34
19
42
6
33b
32a
33a
20
32
7
41a
41b
Propane
Butane
8