OPERATOR'S MANUAL

MODEL #100263
3100W PORTABLE INVERTER GENERATOR

REGISTER YOUR PRODUCT ONLINE
at **championpowerequipment.com**

TAKE IT OUTSIDE™
TAKEYOURGENERATOROUTSIDE.COM

1·877·338·0999
or visit **championpowerequipment.com**

SAVE THESE INSTRUCTIONS. This manual contains important safety precautions which should be read and understood before operating the product. Failure to do so could result in serious injury. This manual should remain with the product.

Specifications, descriptions and illustrations in this manual are as accurate as known at the time of publication, but are subject to change without notice.

Covered by one or more of the following U.S. Patent Numbers: 10,598,101, 10,221,780 and other U.S. and foreign patents pending.

REV 20200923

Champion Power Equipment, Inc., Santa Fe Springs, CA USA

EX2046 (IPR2025-00951)
Patent Owner Champion
CHAMPION0007367

FCC Statement

1. This device complies with Part 15 of the FCC Rules. Operation is subject to the following two conditions: (1) This device may not cause harmful interference. (2) This device must accept any interference received, including interference that may cause undesired operation.
2. Changes or modifications not expressly approved by the party responsible for compliance could void the user's authority to operate the equipment.

NOTE: This equipment has been tested and found to comply with the limits for a Class B digital device, pursuant to Part 15 of the FCC Rules. These limits are designed to provide reasonable protection against harmful interference in a residential installation. This equipment generates uses and can radiate radio frequency energy and, if not installed and used in accordance with the instructions, may cause harmful interference to radio communications. However, there is no guarantee that interference will not occur in a particular installation. If this equipment does cause harmful interference to radio or television reception, which can be determined by turning the equipment off and on, the user is encouraged to try to correct the interference by one or more of the following measures:

– Reorient or relocate the receiving antenna.
– Increase the separation between the equipment and receiver.
– Connect the equipment into an outlet on a circuit different from that to which the receiver is connected.

Consult the dealer or an experienced radio/TV technician for help.

Have questions or need assistance?

Do not return this product to the store!

WE ARE HERE TO HELP!

Visit our website:
www.championpowerequipment.com
for more info:

- Product Info & Updates
- Frequently Asked Questions
- Tech Bulletins
- Product Registration

– or –

Call our Customer Care Team Toll-Free at:
1-877-338-0999

Parts Ordering:
Mon – Fri 8:30 AM – 5:00 PM (PST/PDT)
Toll Free: 1-877-338-0999

*We are always working to improve our products. Therefore, the enclosed product may differ slightly from the image on the cover.

EX2046 (IPR2025-00951)
Patent Owner Champion
CHAMPION0007368

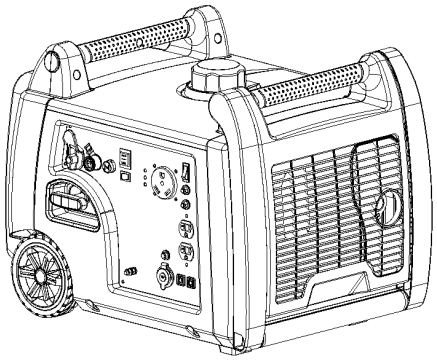

3400 Starting Watts/3100 Running Watts (Gas)
3060 Starting Watts/2790 Running Watts (LPG)
Electric Start
DUAL FUEL INVERTER GENERATOR

TABLE OF CONTENTS

Introduction **1**
Introduction 1
Manual Conventions **2**
Safety Rules **3**
Fuel Safety 5
Safety Label Locations 6
Controls and Features **7**
Generator 7
Parts Included 7
Power Panel 8
Assembly **9**
Remove the Generator from the Shipping Carton 9
Connect the Battery 9
Add Engine Oil 10
Add Fuel (Gas) 11
Connecting the Propane (LPG) Cylinder 12
Grounding 12
Operation **13**
Generator Location 13
Grounding 13
Fuel Selector Switch 13
Starting the Inverter 14
Gasoline 14
LPG 15
Economy Control Switch 16
12V DC outlet 16
Connecting Electrical Loads 16
Parallel Operation 16
Do Not Overload Generator 17
Capacity 17
Power Management 17
Stopping the Engine 17
Operation at High Altitude 18
Overload Operation 18
Maintenance and Storage **19**
Engine Maintenance 19
Oil 19
Spark Plugs 19
Air Filter 20
Cleaning 20
Spark Arrester 20
Adjustments 20
Maintenance Schedule 20
Generator Battery 21
Charge the Battery 21
Disconnect the Battery 21
Generator Maintenance 21
Storage **22**
Generator Storage 22
Specifications **23**
Engine Specifications 23
Generator Specifications 23
Fuel 23
Spark Plugs 23
Maintenance Valve Clearance 23
Oil 23
An Important Message About Temperature 23
Wiring Diagram 24
Parts Diagram 25
Parts List 26
Engine Parts Diagram 29
Engine Parts List 30
Troubleshooting **32**

EX2046 (IPR2025-00951)
Patent Owner Champion
CHAMPION0007369

Introduction

Congratulations on your purchase of a Champion Power Equipment product. Champion Power Equipment and Champion Engine Technology designs, builds, and supports all of our products to strict specifications and guidelines. With proper product knowledge, safe use, and regular maintenance, this product should bring years of satisfying service.

Every effort has been made to ensure the accuracy and completeness of the information in this manual, and we reserve the right to change, alter and/or improve the product and this document at any time without prior notice.

Since CPE/CET highly value how our products are designed, manufactured, operated and are serviced, and also highly value your safety and the safety of others, we would like you to take the time to review this product manual and other product materials thoroughly and be fully aware and knowledgeable of the assembly, operation, dangers and maintenance of the product before use. Fully familiarize yourself, and make sure others who plan on operating the product fully familiarize themselves too, with the proper safety and operation procedures before each use. Please always exercise common sense and always error on the side of caution when operating the product to ensure no accidents, property damage, or injury occurs. We want you to continue to use and be satisfied with your CPE/CET product for years to come.

Record the model and serial numbers as well as date and place of purchase for future reference. Have this information available when ordering parts and when making technical or warranty inquiries.

Champion Power Equipment Support
1-877-338-0999
Model Number
100263
Serial Number
Date of Purchase
Purchase Location
For **Oil Type** see 'Add Engine Oil' section. For **Fuel Type** see 'Add Fuel' section.

EX2046 (IPR2025-00951)
Patent Owner Champion
CHAMPION0007370

MANUAL CONVENTIONS

This manual uses the following symbols to help differentiate between different kinds of information. The safety symbol is used with a key word to alert you to potential hazards in operating and owning power equipment.
Follow all safety messages to avoid or reduce the risk of serious injury or death.

⚠ DANGER

DANGER indicates an imminently hazardous situation which, if not avoided, ***will*** result in death or serious injury.

⚠ WARNING

WARNING indicates a potentially hazardous situation which, if not avoided, ***could*** result in death or serious injury.

ⓘ CAUTION

CAUTION indicates a potentially hazardous situation which, if not avoided, ***may*** result in minor or moderate injury.

CAUTION

CAUTION used without the safety alert symbol indicates a potentially hazardous situation which, if not avoided, ***may*** result in property damage.

NOTE

If you have questions regarding your generator, we can help. Please call our help line at **1-877-338-0999**

EX2046 (IPR2025-00951)
2
Patent Owner Champion
CHAMPION0007371

SAFETY RULES

⚠ WARNING

Read this manual thoroughly before operating your generator. Failure to follow instructions could result in serious injury or death.

⚠ WARNING

Cancer and Reproductive Harm – www.P65Warnings.ca.gov

⚠ DANGER

Generator exhaust contains carbon monoxide, a colourless, odourless, poison gas. Breathing carbon monoxide will cause nausea, dizziness, fainting or death. If you start to feel dizzy or weak, get to fresh air immediately.

Operate generator outdoors only in a well ventilated area.
DO NOT operate the generator inside any building, including garages, basements, crawlspaces and sheds, enclosure or compartment, including the generator compartment of a recreational vehicle.
DO NOT allow exhaust fumes to enter a confined area through windows, doors, vents or other openings.
DANGER CARBON MONOXIDE: using a generator indoors **CAN KILL YOU IN MINUTES**.

⚠ DANGER

Generator produces powerful voltage.

DO NOT touch bare wires or receptacles.
DO NOT use electrical cords that are worn, damaged or frayed.
DO NOT operate generator in wet weather.
DO NOT allow children or unqualified persons to operate or service the generator
Use a ground fault circuit interrupter (GFCI) in damp areas and areas containing conductive material such as metal decking.
Use approved transfer equipment to isolate generator from your electric utility and notify your utility company before connecting your generator to your power system.

⚠ WARNING

Sparks can result in fire or electrical shock.

When servicing the generator:
Disconnect the spark plug wire and place it where it cannot contact the plug.
DO NOT check for spark with the plug removed.
Use only approved spark plug testers.

⚠ WARNING

Running engines produce heat. Severe burns can occur on contact.
Combustible material can catch fire on contact.

DO NOT touch hot surfaces.
Avoid contact with hot exhaust gases.
Allow equipment to cool before touching.
Maintain at least 3 ft. (91.4 cm) of clearance on all sides to ensure adequate cooling.
Maintain at least 5 ft. (1.5 m) of clearance from combustible materials.

⚠ WARNING

Medical and Life Support Uses.

In case of emergency, call 911 immediately.
NEVER use this product to power life support devices or life support appliances.
NEVER use this product to power medical devices or medical appliances.
Inform your electricity provider immediately if you or anyone in your household depends on electrical equipment to live.
Inform your electrical provider immediately if a loss of power would cause you or anyone in your household to experience a medical emergency.

⚠ WARNING

Operation of this equipment may create sparks that can start fires around dry vegetation.

A spark arrester may be required. The operator should contact local fire agencies for laws or regulations relating to fire prevention requirements.

⚠ DANGER

**Rotating parts can entangle hands, feet, hair, clothing and/or accessories.
Traumatic amputation or severe laceration can result.**

Keep hands and feet away from rotating parts.
Tie up long hair and remove jewelry.
Operate equipment with guards in place.
DO NOT wear loose-fitting clothing, dangling drawstrings or items that could become caught.

⚠ WARNING

**Rapid retraction of the starter cord will pull hand and arm towards the engine faster than you can let go.
Unintentional startup can result in entanglement, traumatic amputation or laceration.
Broken bones, fractures, bruises or sprains could result.**

When starting engine, pull the starter cord slowly until resistance is felt and then pull rapidly to avoid kickback.
DO NOT start or stop the engine with electrical devices plugged in.

ⓘ CAUTION

Exceeding the generator's running capacity can damage the generator and/or electrical devices connected to it.

DO NOT overload the generator.
Start the generator and allow the engine to stabilize before connecting electrical loads.
Connect electrical equipment in the off position, and then turn them on for operation.
Turn electrical equipment off before stopping the generator.
DO NOT tamper with the governed speed.
DO NOT modify the generator in any way.

ⓘ CAUTION

Improper treatment or use of the generator can damage it, shorten its life and void your warranty.

Use the generator only for intended uses.
Operate only on level surfaces.
DO NOT expose generator to excessive moisture, dust, or dirt.
DO NOT allow any material to block the cooling slots.
If connected devices overheat, turn them off and disconnect them from the generator.
DO NOT use the generator if:
- Electrical output is lost
- Equipment sparks, smokes or emits flames
- Equipment vibrates excessively

Fuel Safety

⚠ DANGER

GASOLINE, GASOLINE VAPORS AND LIQUID PETROLEUM GAS (LPG) ARE HIGHLY FLAMMABLE AND EXPLOSIVE.
Fire or explosion can cause severe burns or death. Unintentional startup can result in entanglement, traumatic amputation or laceration.

Gasoline and Gasoline Vapors (Gas):

- GAS IS HIGHLY FLAMMABLE AND EXPLOSIVE.
- Gas can cause a fire or explosion if ignited.
- Gas is a liquid fuel but it's vapors can ignite.
- Gas is a skin irritant and needs to be cleaned up immediately if spilled on skin or clothes.
- Gas has a distinctive odor, this will help detect potential leaks quickly.
- In any gas fire, flames should not be extinguished unless by doing so the fuel supply valve can be turned OFF. This is because if a fire is extinguished and a supply of fuel is not turned OFF, then an explosion hazard could be created.
- Gas expands or contracts with ambient temperatures. Never fill the gas tank to full capacity, as gas needs room to expand if temperatures rise.

Liquefied Petroleum Gas (Propane/LPG):

- LPG (PROPANE) IS HIGHLY FLAMMABLE AND EXPLOSIVE.
- Flammable gas under pressure can cause a fire or explosion if ignited.
- LPG (propane) is heavier than air and can settle in low places while dissipating.
- LPG (propane) has a distinctive odor added to help detect potential leaks quickly.
- In any petroleum gas fire, flames should not be extinguished unless by doing so the fuel supply valve can be turned OFF. This is because if a fire is extinguished and a supply of fuel is not turned OFF, then an explosion hazard could be created.
- When exchanging LPG cylinders, be sure the cylinder valve is of the same type.
- Always keep the LPG cylinder in an upright position.
- LPG will burn skin if it comes in contact with it. Keep any and all LPG away from skin at all times.

When adding or removing Gas:

Turn the generator off and let it cool for at least two minutes before removing the fuel cap. Loosen the cap slowly to relieve pressure in the tank.
Only fill or drain fuel outdoors in a well-ventilated area.
DO NOT pump gas directly into the generator at the gas station. Use an approved container to transfer the fuel to the generator.
DO NOT overfill the fuel tank.
Always keep fuel away from sparks, open flames, pilot lights, heat and other sources of ignition.
DO NOT light or smoke cigarettes.

When starting the generator:

DO NOT attempt to start a damaged generator.
Make certain that the gas cap, air filter, spark plug, fuel lines and exhaust system are properly in place.
Allow spilled fuel to evaporate fully before attempting to start the engine.
Make certain that the generator is resting firmly on level ground.

When operating the generator:

DO NOT move or tip the generator during operation.
DO NOT tip the generator or allow fuel or oil to spill.

When transporting or servicing the generator:

Make certain that the fuel shutoff valve is in the off position and the fuel tank is empty.
Make certain that a LPG cylinder is not attached to generator and is securely stowed away.
Disconnect the spark plug wire.

When storing the generator:

Store away from sparks, open flames, pilot lights, heat and other sources of ignition.
Do not store generator, gas or LPG cylinder near furnances, water heaters, or any other appliances that produce heat or have automatic ignitions.

⚠ WARNING

Never use a gas container, LPG connector hose, gas tank, LPG cylinder or any other fuel item that is damaged or appears damaged.

Safety Label Locations

These labels warn you of potential hazards that can cause serious injury. Read them carefully.

If a label comes off or becomes hard to read, contact Champion Power Equipment's customer service department for possible replacement.

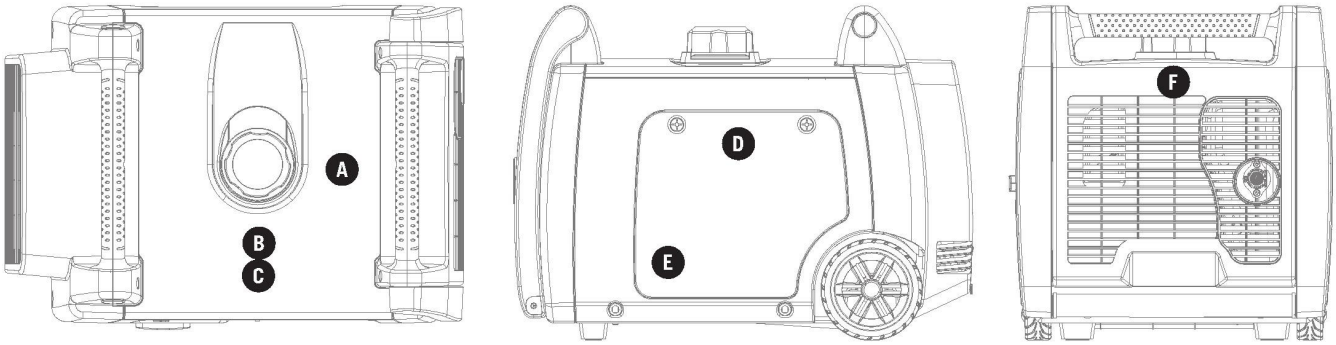

A

B

C

D

E

F

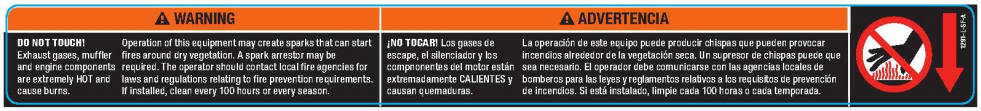

CONTROLS AND FEATURES

Read this owner's manual before operating your generator. Familiarize yourself with the location and function of the controls and features. Save this manual for future reference.

Generator

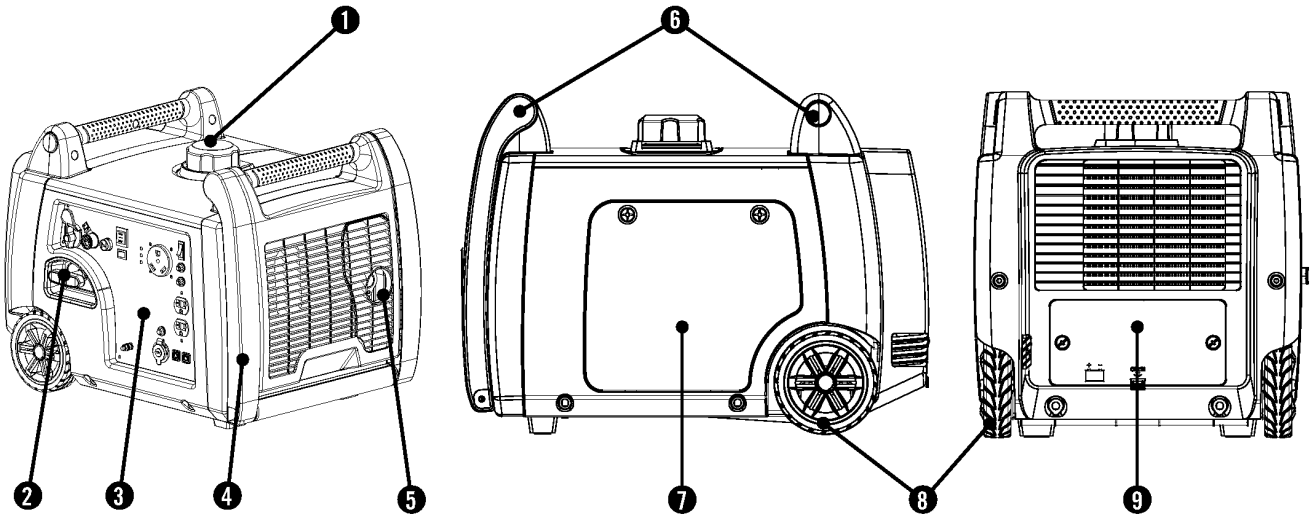

(1) **Fuel Cap** – Remove to add fuel.

(2) **Recoil Starter** – Used to start the engine.

(3) **Power Panel**

(4) **Foldaway Handle** – Do not use the foldaway handle to lift or carry the unit.

(5) **Muffler**

(6) **Carrying Handles**

(7) **Maintenance Cover**

(8) **Never Flat Wheels**

(9) **Battery Access Cover**

Parts Included

Your 100263 gasoline powered generator ships with the following parts:

- Dual 2.4A Port USB Adapter 1
- LPG Hose With Regulator 1
- Oil funnel 1

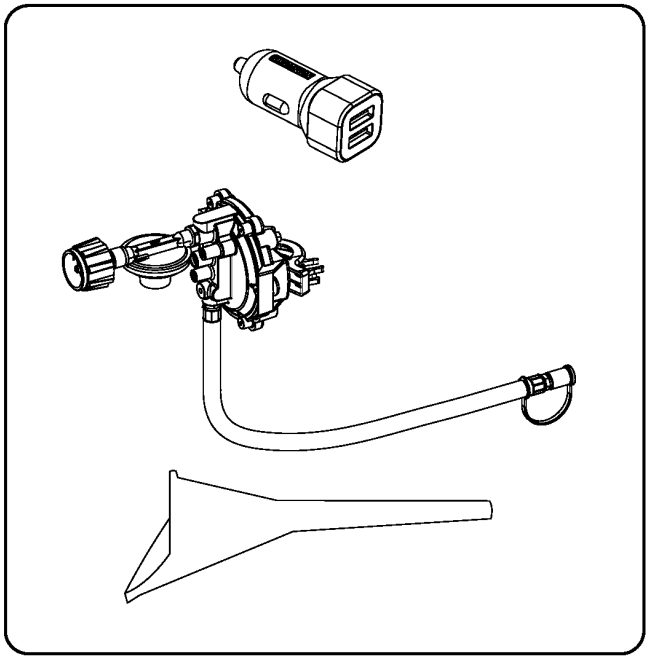

Power Panel

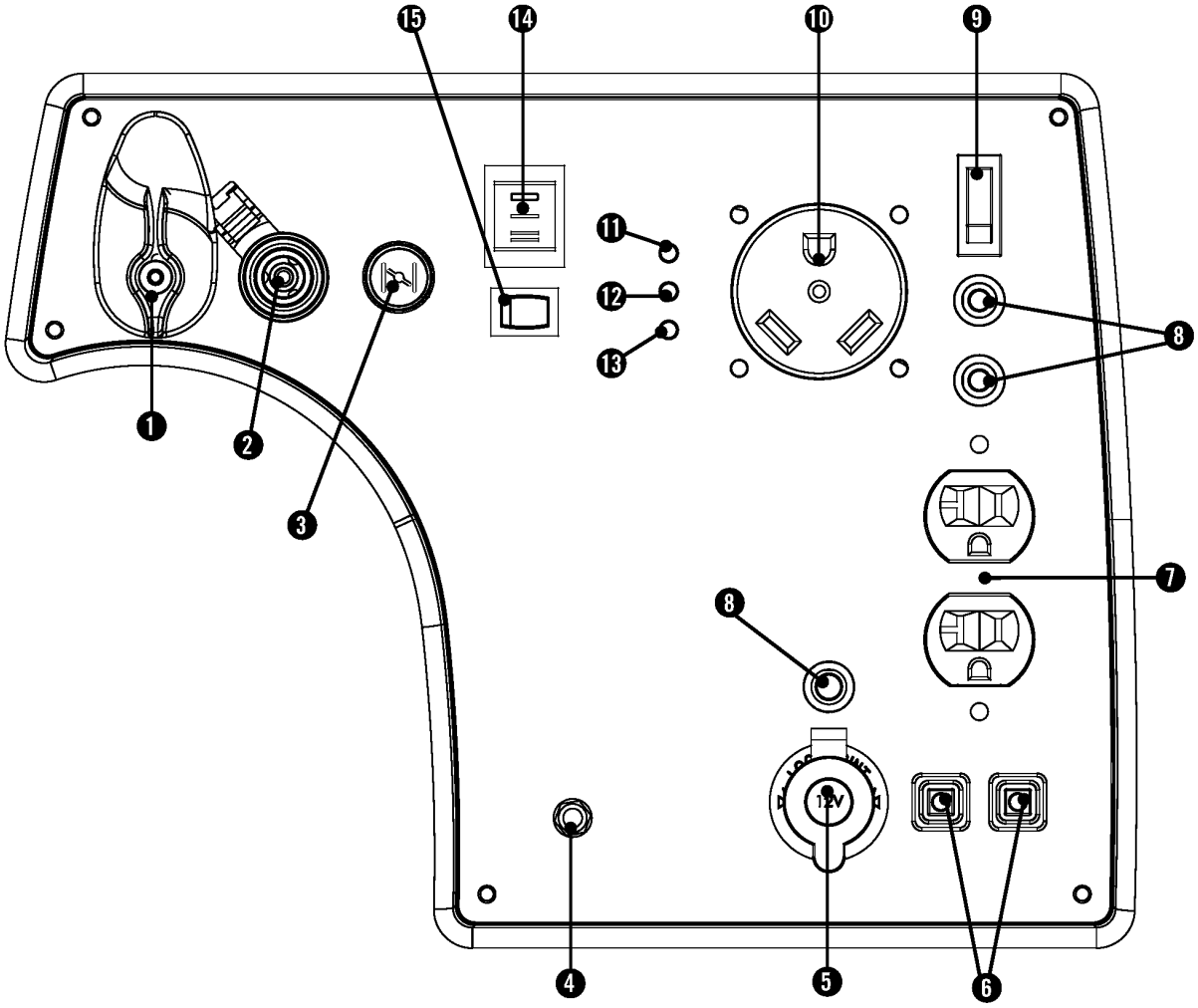

(1) **Fuel Selector Switch** – Used to select and turn on gas or LPG fuel source.

(2) **LPG Hose Quick Connect Inlet**

(3) **Choke**

(4) **Ground Terminal** – Consult an electrician for local grounding regulations.

(5) **12V DC Outlet***

(6) **Parallel Outlets** – used for parallel operation.

(7) **120 Volt AC, 20 Amp Duplex** (NEMA 5-20R) – May be used to supply electrical power for the operation of 120 Volt AC, 20 Amp, single phase 60 Hz electrical loads.

(8) **Circuit Breaker (push-button)** – Protects the generator against electrical overload.

(9) **Battery Switch**

(10) **120 Volt AC, 30 Amp Receptacle** (NEMA TT-30R) – May be used to supply electrical power for the operation of 120 Volt AC, 30 Amp, single phase 60 Hz electrical loads.

(11) **Oil Warning Light** – Check oil level when this light turns on. Engine will not run when indicator is lit.

(12) **Overload Indicator Light** – This light turns ON when the generator is overloaded and will cut power to the receptacles.

(13) **Output Light** – Remains ON during normal operating conditions. Shuts OFF when generator is overloaded.

(14) **Ignition Switch** – Used to start or stop the generator. When operating by propane, this switch will NOT stop the engine.

(15) **Economy Control Switch**

*Warning: Do not operate a device while it is plugged into the 12V DC outlet. Prolonged exposure to engine exhaust can cause serious injury or death. While charging a device do no place on the exhaust side of the generator. Extreme heat caused by exhaust can damage the device, and cause a potential fire hazard.

EX2046 (IPR2025-00951)
Patent Owner Champion
CHAMPION0007377

ASSEMBLY

Your generator requires some assembly. This unit ships from our factory without oil. It must be properly serviced with fuel and oil before operation.
If you have any questions regarding the assembly of your generator, call our help line at 1-877-338-0999. Please have your serial number and model number available.

Remove the Generator from the Shipping Carton

1. Set the shipping carton on a solid, flat surface.
2. Remove everything from the carton except the generator.
3. Using the carrying handles of the unit, carefully remove the generator from the box. (two people lifting is recommended)

Connecting the Battery

1. Using a screwdriver, remove the two (2) maintenance cover screws from the battery maintenance cover. (A)
2. Once the screws have been removed, the rubber pull-tab on the cover can be pulled out to help loosen and dislodge the maintenance cover. (A)
3. Remove the battery maintenance cover. (A)

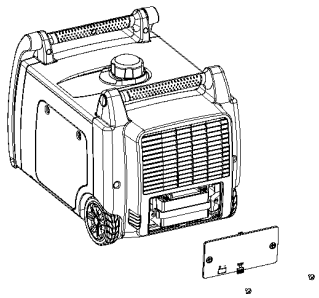

4. Cut zip tie that is binding the battery cables together.
5. Using a screwdriver, unscrew the battery bolt in the red, positive (+) battery terminal.
6. Connect the red, positive (+) wire lead to the positive (+) terminal on the battery using the bolt.
7. Pull rubber sheath over battery cable connection and battery terminal.
8. Repeat steps 5-7 for the black, negative (-) battery wire lead and black, negative (-) battery terminal.

NOTE

If the battery cables are not visible once the battery maintenance cover has been removed, please note that cables may be tucked up above the battery, not in plain view.

EX2046 (IPR2025-00951)
Patent Owner Champion
CHAMPION0007378

Add Engine Oil

CAUTION

DO NOT attempt to crank or start the engine before it has been properly filled with the recommended type and amount of oil. Damage to the generator as a result of failure to follow these instructions will void your warranty.

NOTE

The recommended oil type is 10W-30 automotive oil.

1. Place the generator on a flat, level surface.
2. Loosen the cover screws and remove the maintenance cover.

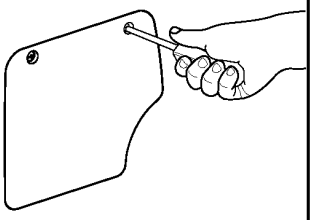

3. Remove oil fill cap/dipstick to add oil.
4. Add up to 0.6 L (0.6 qt.) of oil and replace oil fill cap/dipstick. DO NOT OVERFILL.
5. Check engine oil level daily and add as needed.

NOTE

Once oil has been added, a visual check should show oil about 1-2 threads from running out of the fill hole.
If using the dipstick to check oil level, DO NOT screw in the dipstick while checking.

NOTE

Check oil often during the break-in period. Refer to the Maintenance section for recommended service intervals.

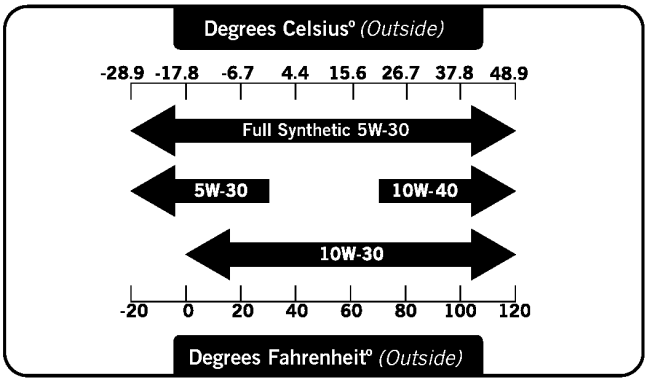

CAUTION

The engine is equipped with a low oil shut-off and will stop when the oil level in the crankcase falls below the threshold level.

NOTE

The generator rotor has a sealed, pre-lubricated ball bearing that requires no additional lubrication for the life of the bearing.

NOTE

We consider the first 5 hours of run time to be the break-in period for the unit. During the break in period stay at or below 50% of the running watt rating and vary the load occasionally to allow stator windings to heat and cool. Adjusting the load will also cause engine speed to vary and help seat piston rings. After the 5 hour break-in period, change the oil.

NOTE

Synthetic oil may be used after the 5 hour initial break-in period. Using synthetic oil does not increase the recommended oil change interval.

NOTE

Weather will affect engine oil and engine performance. Change the type of engine oil used based on weather conditions to suit the engine needs.

Add Fuel (Gas)

1. Use clean, fresh, regular unleaded fuel with a minimum octane rating of 87 and an ethanol content of less than 10% by volume.
2. DO NOT mix oil with fuel.
3. Clean the area around the fuel cap.
4. Remove the fuel cap.
5. Slowly add fuel to the tank. DO NOT OVERFILL. Fuel can expand after filling. A minimum of 1/4 in. (6.4 mm) of space left in the tank is required for fuel expansion, more than 1/4 in. (6.4 mm) is recommended. Fuel can be forced out of the tank as a result of expansion if it is overfilled, and can affect the stable running condition of the product. When filling the tank, it is recommended to leave enough space for the fuel to expand.
6. Screw on the fuel cap and wipe away any spilled fuel.

CAUTION

Use regular unleaded gasoline with a minimum octane rating of 87.

Do not mix oil and gasoline.
Fill tank to approximately 1/4 in. (6.4 mm) below the top of the tank to allow for fuel expansion.
DO NOT pump gas directly into the generator at the gas station. Use an approved container to transfer the fuel to the generator.
DO NOT fill fuel tank indoors.
DO NOT fill fuel tank when the engine is running or hot.
DO NOT overfill the fuel tank.
DO NOT light cigarettes or smoke when filling the fuel tank.

WARNING

Pouring fuel too fast through the fuel screen may result in blow back of fuel at the operator while filling.

NOTE

Our engines work well with 10% or less ethanol blend fuels. When using blended fuels there are some issues worth noting:

- Ethanol-gasoline blends can absorb more water than gasoline alone.
- These blends can eventually separate, leaving water or a watery goo in the tank, fuel valve and carburetor.
- With gravity-fed fuel supplies, this compromised fuel can be drawn into the carburetor and cause damage to the engine and/or potential hazards.
- There are only a few suppliers of fuel stabilizer that are formulated to work with ethanol blend fuels.
- Any damages or hazards caused by using improper fuel, improperly stored fuel, and/or improperly formulated stabilizers, are not covered by manufacture's warranty.

It is advisable to always shut off the fuel supply, run the engine to fuel starvation and drain the tank when the equipment is not in use for more than 30 days.

Connecting the Propane (LPG) Cylinder

1. Make sure the fuel selector switch on the inverter is in the 12 o'clock (vertical) position. (A)
2. Using your fingers, slide the outer barrel back on the LPG quick connect hose fitting (B).
3. While the outer barrel is in the back position, insert the LPG hose (included) into the inlet and release the outer barrel. The barrel will automatically return and lock the hose in the inlet.
4. Remove the safety plug or cap from the cylinder valve.
5. Attach the other end of the hose to the LPG cylinder and hand tighten.
6. Check all connections for leaks by wetting the fittings with a solution of soap and water. Bubbles which appear or bubbles which grow indicate that a leak exists. If a leak exists at a fitting then turn off the gas valve at the tank and tighten the fitting. Turn the gas back on and recheck the fitting with the soap and water solution. If the leak continues or if the leak is not at a fitting then do not use the generator and contact customer service.

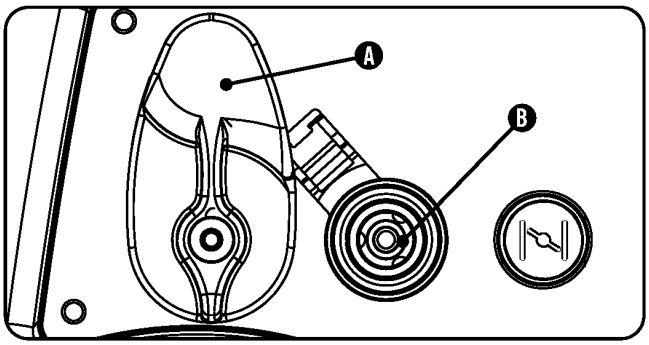

NOTE

- Use only standard 20 or 30 pound capacity LP tanks with Type 1, right hand Acme threads.
- Verify the requalification date on the tank has not expired.
- All new cylinders must be purged of air and moisture prior to filling. Used cylinders that have not been plugged or kept closed must also be purged.
- The purging process should be done by a LPG supplier. (Cylinders from an exchange supplier should have been purged and filled properly already).
- Always position the cylinder so the connection between the valve and the gas inlet won't cause sharp bends or kinks in the hose.

CAUTION

Do not allow children to tamper or play with the cylinder or hose connections.

CAUTION

Use approved LPG cylinders equipped with an OPD (overfilling prevention device) valve. Always keep the cylinder in a vertical position with the valve on top and installed at ground level on a flat surface. Cylinders must not be installed near any heat source and should not be exposed to sun, rain, and dust. When transporting and storing, turn off the cylinder valve and fuel valve, and disconnect the cylinder. Plug the outlet, usually by a plastic protective cap, if one is available. Keep cylinders away from heat and ventilated when in a vehicle.

WARNING

If there is a strong smell of gas: Close off the gas supply at the cylinder. Use soapy water, which will produce a large bubble at the point of any leak, to check the hose, and connections on the cylinder valve and the generator. Do not smoke or light a cigarette, or check for leaks using a match, open flame source or lighter. Contact a qualified technician to inspect and repair the LPG system if a leak is found, before using the generator.

Grounding

Your generator must be properly connected to an appropriate ground to help prevent electric shock.

WARNING

Failure to properly ground the generator can result in electric shock.

A ground terminal connected to the frame of the generator has been provided on the power panel. For remote grounding, connect of a length of heavy gauge (12 AWG minimum) copper wire between the generator ground terminal and a copper rod driven into the ground. We strongly recommend that you consult with a qualified electrician to ensure compliance with local electrical codes.

EX2046 (IPR2025-00951)
Patent Owner Champion
CHAMPION0007381

Generator Location

NEVER operate the generator inside any building, including garages, basements, crawlspaces and sheds, enclosure or compartment, including the generator compartment of a recreational vehicle. Please consult your local authority. In some areas, generators must be registered with the local utility. Generators used at construction sites may be subject to additional rules and regulations. Generators should be on a flat, level surface at all times (even while not in operation). Generators must have at least 5 ft. (1.5 m) of clearance from all combustible material. In addition to clearance from all combustible material, generators must also have at least 3 ft. (91.4 cm) of clearance on all sides to allow for adequate cooling, maintenance and servicing. Generators should never be started or operated in the back of a SUV, camper, trailer, in the bed of a truck (regular, flat or otherwise), under staircases/stairwells, next to walls or buildings, or in any other location that will not allow for adequate cooling of the generator and/or the muffler. DO NOT contain generators during operation. Allow generators to properly cool before transport or storage. Place the generator in a well-ventilated area. DO NOT place the generator near vents or intakes where exhaust fumes could be drawn into occupied or confined spaces. Carefully consider wind and air currents when positioning generator.

Failure to follow proper safety precautions may void manufacturer's warranty.

⚠ WARNING

Do not operate or store the generator in rain, snow, or wet weather.

Using a generator or electrical appliance in wet conditions, such as rain or snow, or near a pool or sprinkler system, or when your hands are wet, could result in electrocution.

⚠ WARNING

During operation the muffler and exhaust fumes produced will become hot. If adequate cooling and breathing space are not supplied, or if the generator is blocked or contained, temperatures can become extremely heated and may lead to fire.

Grounding

The generator system ground connects the frame to the ground terminals on the power panel.

- The generator (stator winding) is isolated from the frame and from the AC receptacle ground pin.
- Electrical devices that require a grounded receptacle pin connection will not function if the receptacle ground pin is not functional, unless the neutral wire is bonded to the frame.

Fuel Selector Switch

The fuel selector switch on the front panel of the inverter is designed to choose the desired fuel source– Gasoline or LPG. To select the desired fuel source, simply rotate the selector switch to the fuel symbol on the panel. Turn the fuel selector switch to the 12 o'clock (vertical) position for LPG operation. (A)

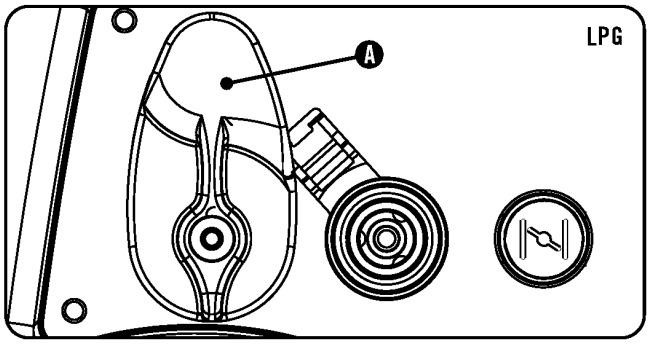

Turn the fuel selector switch to the 3 o'clock (horizontal) position for gasoline operation. (B)

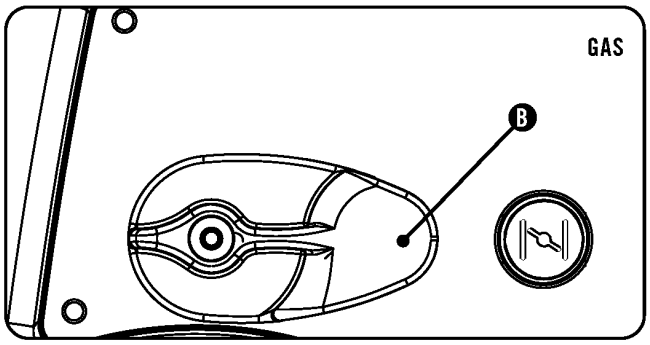

NOTE

When the fuel selector switch is in the 3 o'clock position, the gas fuel valve is OPEN. To CLOSE the gas fuel valve, turn the selector switch to the 12 o'clock position.

Starting the Inverter

CAUTION

If the ignition switch is held down in the "Start" position longer than 5 seconds it could damage the starter.

NOTE

The supplied 12V 7AH battery does re-charge while the engine is running, but it is also recommended that the battery be fully charged at least once per month.

NOTE

When the battery switch is in the "ON" position, the switch will light up if the battery is sending out a charge. If the switch does not light up while in the "ON" position, check that the battery connection is still good.

NOTE

If the engine starts but does not continue to run make certain that the generator is on a flat, level surface. The engine is equipped with a low oil sensor that will prevent the engine from running when the oil level falls below a critical threshold.

Gasoline

NOTE

The generator will NOT START with gasoline without battery charge or an appropriate connection.

1. Make certain the generator is on a flat, level surface.
2. Disconnect all electrical loads from the generator. Never start or stop the generator with electrical devices plugged in or turned on.
3. Turn the fuel selector switch to the "Horizontal" position.
4. Pull the choke out to the "CHOKE" position.
5. Push the ignition switch to the "ON" position.
6. Push the battery switch to the "ON" position.
7. ELECTRIC START: Press and hold the ignition switch to the "START" position. Release as the engine begins to start. If the engine fails to start within five seconds, release the switch and wait at least ten seconds before attempting to start the engine again.
8. RECOIL START: Pull the starter cord slowly until resistance is felt and then pull rapidly.
9. Do not over-choke. Allow the engine to warm up several seconds before gradually pushing the choke to the "RUN" position..

NOTE

Keep choke in "Choke" position for only 1 pull of the recoil starter. After first pull, push choke in for up to the next 3 pulls of the recoil starter. Too much choke leads to sparkplug fouling/engine flooding due to the lack of incoming air. This will cause the engine not to start.

EX2046 (IPR2025-00951)
Patent Owner Champion
CHAMPION0007383

LPG

1. Make certain the generator is on a flat, level surface.
2. Disconnect all electrical loads from the generator. Never start or stop the generator with electrical devices plugged in or turned on.
3. Turn the fuel selector switch to the "Vertical" position and connect LPG hose.
4. Fully open the LPG cylinder fuel knob.
5. Push the ignition switch to the "ON" position.
6. Push the battery switch to the "ON" position.
7. ELECTRIC START: Pull the choke to the "Choke" position.
8. Press and hold the ignition switch to the "START" position. Release as the engine begins to start. If the engine fails to start within five seconds, release the switch and wait at least ten seconds before attempting to start the engine again.
9. Do not over-choke. Allow the engine to warm up several seconds before gradually pushing the choke to the "RUN" position.
10. RECOIL START: Pull the choke to the "Choke" position.
11. PULL-TO-PRIME: Pull the starter cord slowly until resistance is felt and then pull rapidly. Pull with choke out 1-2 times until you feel a few combustion pulses that indicates that the engine momentarily started.
12. Push the choke in.
13. Pull the starter cord slowly until resistance is felt and then pull rapidly.
14. If engine fails to start in 1-pull with choke in the "RUN" position, then pull choke out and repeat the PULL-TO-PRIME step.

NOTE

Observing frost on LPG containers and regulators is common during operation and normally is not an indication of a problem. As LPG vaporizes and travels from the tank to the generator engine it expands. The amount of frost that forms can be affected by the size of the container, the amount of fuel being used, the humidity of the air and other operating conditions. In unusual situations this frost may eventually restrict the flow of gas to the generator resulting in deteriorating performance. For example, if the tank temperature is reduced to a very low level then the rate at which the LPG vaporizes is also reduced and may not provide sufficient fuel flow to the engine. This is not an indication of a problem with the generator but only a problem with the flow of gas from the LPG container. If generator performance seems to be deteriorating at the same time that ice formation is observed on tank valve, hose or regulator then some actions may be taken to eliminate this symptom.

In these rare situations it can be helpful to reduce or eliminate the cold fuel system effects by doing one of the following:

- Exchanging fuel tanks to allow the first tank to warm up, repeating as necessary
- Placing the LPG container at the end of the generator near the handle, where engine fan air flows out from the generator. This air is slightly heated by flowing over the engine. The container should not be placed in the path of the muffler outlet.
- The container can be temporarily warmed by pouring warm water over the top of the tank.

Economy Control Switch

The Economy Control switch can be activated in order to minimize fuel consumption and noise while operating the unit during times of **reduced electrical output**, allowing the engine speed to idle during periods of non-use.
The engine speed returns to normal when an electrical load is connected. When the economy switch is off, the engine runs at normal speed continuously.

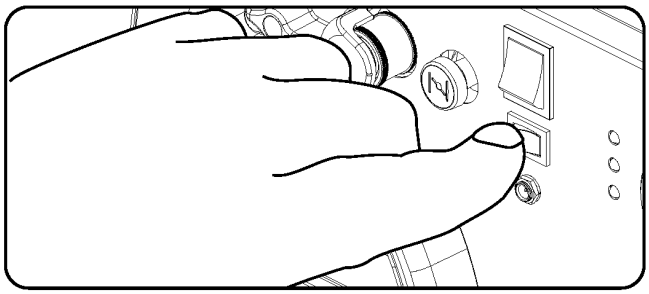

⚠WARNING

For periods of high electrical load or momentary fluctuations, the Economy Control Switch should be turned OFF.

12V DC Outlet

The 12V DC outlet can be used with the supplied USB charger and other commercially available 12V DC automotive style plugs. The DC output is unregulated and can damage some products. Confirm your accessory input voltage range is at least 12-24V DC. When using the DC outlet turn the Economy mode switch to the "OFF" position.

⚠WARNING

Do not operate a device while it is plugged in to the 12V DC outlet.

Prolonged exposure to engine exhaust can cause serious injury or death.

⚠WARNING

While charging a device do not place on the exhaust side of the generator. Extreme heat caused by exhaust can damage the device, and cause a potential fire hazard.

Connecting Electrical Loads

1. Let the engine stabilize and warm up for a few minutes after starting
2. Plug in and turn on the desired 120 Volt AC single phase, 60 Hz electrical loads.

– DO NOT connect 3-phase loads to the generator.
– DO NOT connect 50 Hz loads to the generator.
– DO NOT overload the generator.

NOTE

Connecting a generator to your electric utility company's power lines or to another power source may be against the law. In addition this action, if done incorrectly, could damage your generator and appliances and could cause serious injury or even death to you or a utility worker who may be working on nearby power lines. If you plan to run a portable electric generator during an outage, please notify your electric utility company immediately and remember to plug your appliances directly into the generator. Do not plug the generator into any electric outlet in your home. Doing so could create a connection to the utility company power lines. You are responsible for ensuring that your generator's electricity does not feed back into the electric utility power lines.
If the generator will be connected to a building electrical system, consult your local utility company or a qualified electrician. Connections must isolate generator power from utility power and must comply with all applicable laws and codes.

Parallel Operation

Two (2) Champion model 100263 generators can be operated in parallel to increase the total available electrical power. A Champion parallel kit (optional equipment) is required for parallel operation. For kit availability, call customer service at 1-877-338-0999 or visit www.championpowerequipment.com.

Detailed instructions for parallel kit installation, operation, and rating of the connected generators are provided in the parallel kit owner's manual and operating instructions.

EX2046 (IPR2025-00951)
Patent Owner Champion
CHAMPION0007385

Do Not Overload Generator

Capacity

Follow these simple steps to calculate the running and starting watts necessary for your purposes.

1. Select the electrical devices you plan on running at the same time.
2. Total the running watts of these items. This is the amount of power you need to keep your items running.
3. Identify the highest starting wattage of all devices identified in step 1. Add this number to the number calculated in step 2. Surge wattage is the extra burst of power needed to start some electric driven equipment. Following the steps listed under "Power Management" will guarantee that only one device will be starting at a time.

Power Management

Use the following formula to convert voltage and amperage to watts:

Volts x Amps = Watts

To prolong the life of your generator and attached devices, follow these steps to add electrical load:

1. Start the generator with no electrical load attached.
2. Allow the engine to run for several minutes to stabilize.
3. Plug in and turn on the first item. It is best to attach the item with the largest load first.
4. Allow the engine to stabilize.
5. Plug in and turn on the next item.
6. Allow the engine to stabilize.
7. Repeat steps 5-6 for each additional item.

NOTE

Never exceed the specified capacity when adding loads to the generator.

Stopping the Engine

1. Turn off and unplug all electrical loads. Never start or stop the generator with electrical devices plugged in or turned on.
2. Let the generator run at no-load for several minutes to stabilize internal temperatures of the engine and generator.
3. Turn the Fuel Valve to the "OFF" position if operating by gas.
4. Turn the LPG cylinder knob to the "CLOSE" or off position if operating by LPG.
5. Let the engine run until fuel starvation has stopped the engine. This usually takes a few minutes.
6. Press the ignition switch to the "OFF" position.
7. Turn battery switch to the "Off" Position.

Important: Always ensure that the fuel valve and the ignition switch are in the "OFF" position when the engine is not in use.

NOTE

When turning off the generator after LPG operation, make sure the LPG cylinder knob is in the fully closed position.

NOTE

If the engine will not be used for a period of two (2) weeks or longer, please see the Storage section for proper engine and fuel storage.

NOTE

Always turn the battery switch to the "OFF" position when unit is not in use, this will stop the battery from being drained. Follow the maintenance and storage instructions for the generator and battery when the unit will not be used for a period of 2 weeks or more.

Operation at High Altitude

The density of air at high altitude is lower than at sea level. Engine power is reduced as the air mass and air-fuel ratio decrease. Engine power and generator output will be reduced approximately 3½% for every 1000 feet of elevation above sea level. This is a natural trend and cannot be changed by adjusting the engine. At high altitudes increased exhaust emissions can also result due to the increased enrichment of the air fuel ratio. Other high altitude issues can include hard starting, increased fuel consumption and spark plug fouling.

To alleviate high altitude issues other than the natural power loss, Champion Power Equipment can provide a high altitude carburetor main jet. The alternative main jet and installation instructions can be obtained by contacting Customer Support. Installation instructions are also available in the Technical Bulletin area of the Champion Power Equipment internet site.

The part number and recommended minimum altitude for the application of the high altitude carburetor main jet is listed in the table below.

In order to select the correct high altitude main jet it is necessary to identify the carburetor model. For this purpose, a code is stamped on the side of the carburetor. Select the correct main jet part number corresponding to the carburetor code found on your particular carburetor.

Carburetor Code	Main Jet	Part Number	Altitude
P25-4-H	Standard	28.131017.00.H	3500 Feet (1067 Meters)
	Altitude	28.131017.00.01.H	

⚠WARNING

Operation using the alternative main jet at elevations lower than the recommended minimum altitude can damage the engine. For operation at lower elevations, the standard main jet must be used. Operating the engine with the wrong engine configuration at a given altitude may increase its emissions and decrease fuel efficiency and performance.

Overload Operation

The overload indicator light will turn on when the rated load is exceeded. When the maximum load is reached, the LED will blink and cut power to the receptacles. To recover the power, shut down the engine, wait until the light turns off and restart the generator.

EX2046 (IPR2025-00951)
Patent Owner Champion
CHAMPION0007387

MAINTENANCE AND STORAGE

The owner/operator is responsible for all periodic maintenance.

⚠WARNING

Never operate a damaged or defective generator.

⚠WARNING

Tampering with the factory set governor will void your warranty.

⚠WARNING

Improper maintenance will void your warranty.

NOTE

Maintenance, replacement, or repair of emission control devices and systems may be performed by any non-road engine repair establishment or individual.

Complete all scheduled maintenance in a timely manner. Correct any issue before operating the generator.

NOTE

For service or parts assistance, contact our help line at **1-877-338-0999**

Engine Maintenance

To prevent accidental starting, remove and ground spark plug wire before performing any service.

Oil

Change oil when the engine is warm. Refer to the oil specification to select the proper grade of oil for your operating environment.

1. Remove oil fill cap/dipstick.
2. Use pliers to slide the spring clamp down the oil drain hose and pull the hose off the plug bracket.
3. Point the hose into a drain pan and allow the oil to drain completely. **Note:** The hose end must be lower than the engine base to allow the oil to drain.
4. Replace oil drain hose onto plug bracket and slide spring clamp back into position.
5. Add up to 0.6 qt. (0.6 L) of oil and replace oil fill cap/dipstick. DO NOT OVERFILL.
6. Dispose of used oil at an approved waste management facility.

NOTE

Once oil has been added, a visual check should show oil about 1-2 threads from running out of the fill hole. If using the dipstick to check oil level, DO NOT screw in the dipstick while checking.

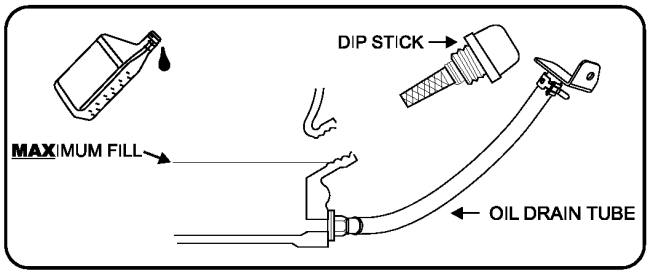

Spark Plugs

1. Remove the spark plug cable from the spark plug.
2. Use a spark plug socket tool (not included), or a 13/16 in. or 21 mm socket (not included) to remove the plug.
3. Inspect the electrode on the plug. It must be clean and not worn to produce the spark required for ignition.
4. Make certain the spark plug gap is 0.7 - 0.8 mm or (0.028 - 0.031 in.).

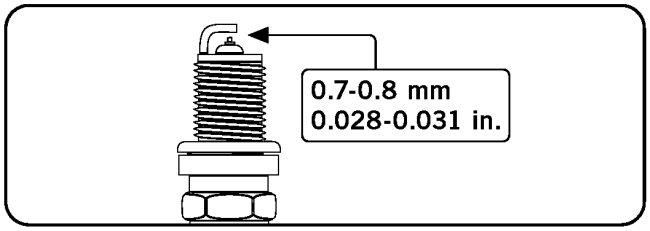

5. Refer to the spark plug recommendation chart when replacing the plug.
6. Carefully thread the plug into the engine.
7. Use the spark plug socket (not included) to firmly install the plug.
8. Attach the spark plug wire to the plug.

Air Filter

1. Remove the maintenance cover.
2. Locate the air filter plastic cover.
3. Unsnap the locking hinge on the cover.
4. Remove the old filter.
5. Place the new filter in the assembly.
6. Re-snap the hinge on the air filter cover.
7. Reinstall the maintenance cover and tighten the cover screw securely.

Cleaning

CAUTION

DO NOT spray generator with water.

Water can contaminate the fuel system.

Use a damp cloth to clean exterior surfaces of the generator.
Use a soft bristle brush to remove dirt and oil.
Use an air compressor (25 PSI) to clear dirt and debris from the generator.

Spark Arrester

1. Allow the engine to cool completely before servicing the spark arrester.
2. Remove the two screws holding the cover plate which retains the end of the spark arrester to the muffler.
3. Remove the spark arrester screen.
4. Carefully remove the carbon deposits from the spark arrester screen with a wire brush.
5. Replace the spark arrester if it is damaged.
6. Position the spark arrester in the muffler and attach with the two screws.

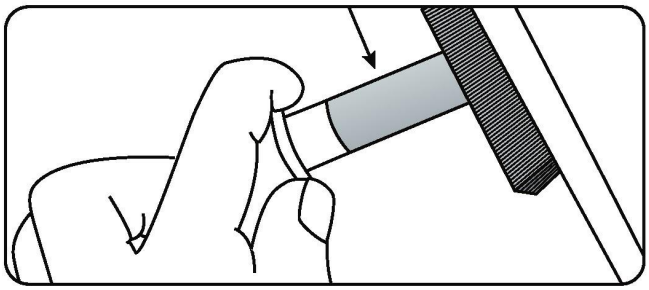

CAUTION

Failure to clean the spark arrester will result in degraded engine performance.

Adjustments

The air-fuel mixture is not adjustable. Tampering with the governor can damage your generator and your electrical devices and will void your warranty. CPE recommends that you contact our service line at **1-877-338-0999** for all other service and/or adjustment needs.

Maintenance Schedule

Follow the service intervals indicated in the following maintenance schedule.
Service your generator more frequently when operating in adverse conditions.
Contact our help line at **1-877-338-0999** to locate the nearest Champion Power Equipment certified service dealer for your generator or engine maintenance needs.

Every 8 hours or daily	
	Check oil level
	Clean around air intake and muffler
	Check hosers for leaks
First 5 hours	
	Change oil
Every 50 hours or every season	
	Clean air filter
	Change oil if operating under heavy load or in hot environments
Every 100 hours or every season	
	Change oil
	Clean/Adjust spark plug
	Check/Adjust valve clearance*
	Clean spark arrester
	Clean fuel tank and filter*
Every 250 hours	
	Clean combustion chamber*
Every 3 years	
	Replace fuel line and LPG hose

*To be performed by knowledgeable, experienced owners or Champion Power Equipment certified dealers.

EX2046 (IPR2025-00951)
Patent Owner Champion
CHAMPION0007389

MAINTENANCE AND STORAGE

Generator Battery

This product is equipped with an automatic battery charging circuit. The battery will receive charging voltage when the engine is running. The battery will maintain a proper charge if the unit is used on a regular basis (about once every two weeks). If it is used less frequently, the battery should be connected to a trickle charger (not included) or battery maintainer to keep the battery properly charged. If the battery is not able to start the engine, it can be started by manually pulling the engine recoil cord. If the battery voltage is extremely low, the charging circuit may not be able to re-charge the battery. In this case, the battery must be connected to a standard automotive style battery charger for re-charging before it can be used.

Charge the Battery

For a generator equipped with batteries for electric starting, proper battery maintenance and storage should be followed. An automatic battery charger (not included) with automatic charging capability should be used to charge the battery. Maximum charging rate should not exceed 1.5 amps. Follow the instructions included with the battery charger. The battery should be fully charged at least once per month.

NOTE

A Float Charger will maintain the battery condition over long storage periods.

Disconnect the Battery

1. Remove the battery panel cover.
2. Remove the protective cover from the black/negative battery lead.
3. Disconnect the black/negative lead from the black/negative terminal on the battery and store the cap screw and nut.
4. Repeat steps 1-2 for the red/positive battery lead.
5. Store the battery in a cool, dry place.

Generator Maintenance

Make certain that the generator is kept clean and stored properly. Only operate the unit on a flat, level surface in a clean, dry operating environment. DO NOT expose the unit to extreme conditions, excessive dust, dirt, moisture or corrosive vapours.

Use a damp cloth to clean exterior surfaces of the generator.

Use a soft bristle brush to remove dirt and oil.

Use an air compressor (25 PSI) to clear dirt and debris from the generator.

Inspect all air vents and cooling slots to ensure that they are clean and unobstructed.

CAUTION

DO NOT use a garden hose to clean the generator.

Water can enter the generator through the cooling slots and damage the generator windings.

Storage

The generator should be started at least once every 14 days and allowed to run for at least 20 minutes. For longer term storage, please follow these guidelines.

Generator Storage

1. Add a properly formulated fuel stabilizer to the tank.
2. Be sure all appliances are disconnected from the generator.
3. Run the generator for a few minutes so the treated fuel cycles through the fuel system and carburetor.
4. Turn the fuel valve to the "Off" position.
5. Let the generator run until fuel starvation has stopped the engine. This usually takes a few minutes.
6. The generator needs to cool completely before cleaning and storage.
7. Remove the spark plug cap, then pull the recoil grip 3 times to drain the gasoline from the carburetor jets.
8. Change the engine oil.
9. Remove the spark plug and pour about a tablespoon of oil into the cylinder. Crank the engine slowly to distribute the oil and lubricate the cylinder.
10. Reattach the spark plug.
11. Store the unit in a clean, dry place out of direct sunlight.

⚠ DANGER

Generator exhaust contains odorless and colorless carbon monoxide gas.

To avoid accidental or unintended ignition of your electric start generator during periods of storage, the following precautions should be followed:

- When **storing the generator for short periods of time** make sure that the ignition switch, the fuel valve and the battery switch are set in the **OFF** position.
- When **storing the generator for extended periods of time** make sure that the ignition switch, the fuel valve and the battery switch are set in the the the **OFF** position and the battery leads have been **disconnected** from the battery.

EX2046 (IPR2025-00951)
Patent Owner Champion
CHAMPION0007391

SPECIFICATIONS

Engine Specifications

– Model	YF170FD-L_G
– Displacement	192cc
– Type	4-Stroke OHV
– Start Type	Electric start

Generator Specifications

– Model	100263
– Running Wattage (Gasoline)	3100 Watts
– Running Wattage (LPG)	2790 Watts
– Starting Wattage (Gasoline)	3400 Watts
– Starting Wattage (LPG)	3060 Watts
– AC Load	120 V
– Phase	Single
– Frequency	60 Hz
– Fuel Capacity	1.6 gal. (6 L)
– Gross Weight	110.5 lb. (50.1 kg)
– Net Weight	95.7 lb. (43.4 kg)
– Height	18.3 in. (46.4 cm)
– Width	17.3 in. (44 cm)
– Length	25.1 in. (63.7 cm)

Fuel

Fuel capacity is 1.6 gal. (6 L). Use regular unleaded gasoline with a minimum octane rating of 87 and an ethanol content of less than 10% by volume.

Spark Plugs

OEM spark plug: NHSP F7RTC
Replacement spark plug: NGK BPR7ES or equivalent
Make certain the spark plug gap is 0.7 - 0.8 mm or (0.028 - 0.031 in.).

Maintenance Valve Clearance

- Intake: 0.06 - 0.12 mm (0.002 - 0.005 in.)
- Exhaust: 0.08 - 0.14 mm (0.003 - 0.006 in.)

Note: Tech bulletin regarding the valve adjustment procedure is on www.championpowerequipment.com.

Oil

Use 10W-30 automotive oil.
Oil capacity is up to 0.6 L (0.6 qt.).
DO NOT OVERFILL
Please reference the following chart for recommended oil types for use in the generator.

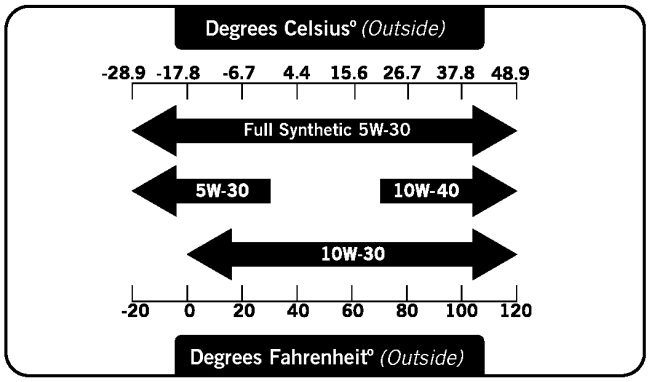

NOTE
Weather will affect engine oil and engine performance. Change the type of engine oil used based on weather conditions to suit the engine needs.

An Important Message About Temperature

Your Champion Power Equipment product is designed and rated for continuous operation at ambient temperatures up to 40°C (104°F). When your product is needed your product may be operated at temperatures ranging from -15°C (5°F) to 50°C (122°F) for short periods. If the product is exposed to temperatures outside this range during storage, it should be brought back within this range before operation. In any event, the product must always be operated outdoors, in a well-ventilated area and away from doors, windows and other vents.

Wiring Diagram

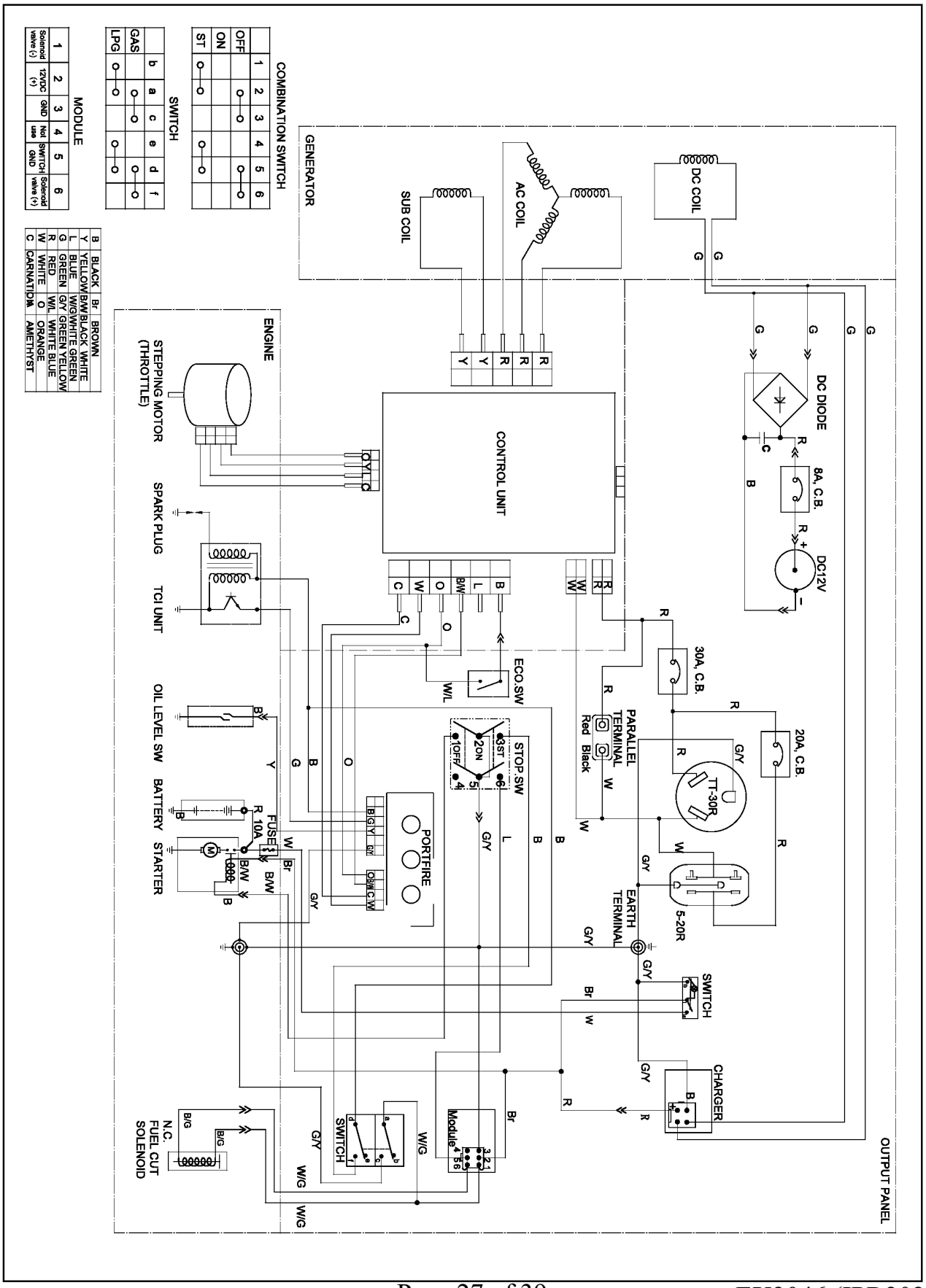

SPECIFICATIONS

Parts Diagram

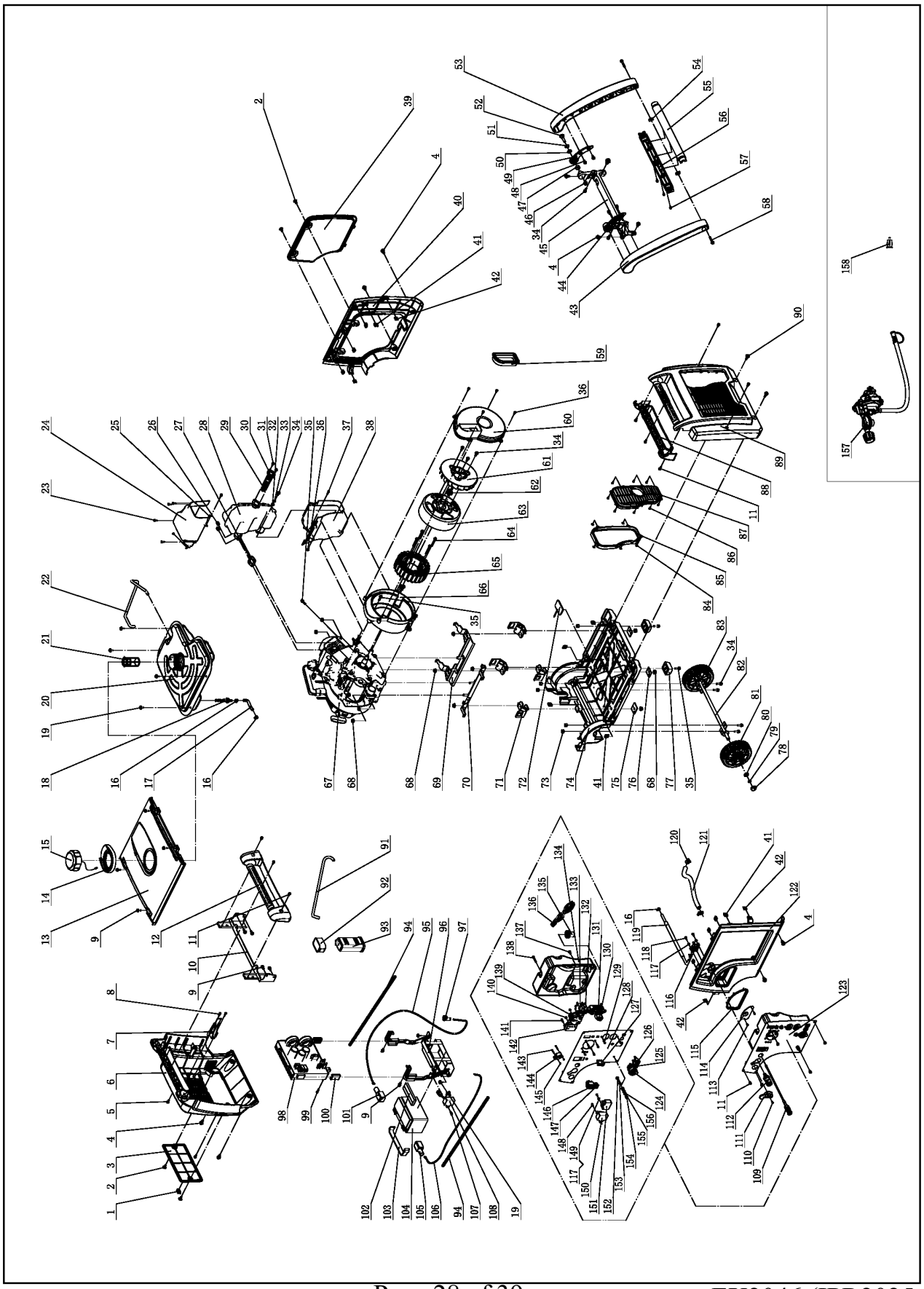

#	Part Number	Description	Qty
1	83.200205.02	Hasp, Maintenance Cover	1
2	2.08.055.1	Bolt, Maintenance Cover, Black	4
3	83.200204.02	Maintenance Cover, Battery, Black	1
4	2.08.052.1	Bolt M6 x 16	10
5	1.9074.4.0516.1	Screw/Washer Assembly M5 x 16, Black	4
6	83.200201.02	Cover, Left, Black	1
7	83.200206.02	Support Arm, Canister	1
8	1.845.4216	Screw, ST4.2 x 16	2
9	1.5789.0612	Flange Bolt M6 x 12	11
10	83.201600.06	Supporter, Left	1
11	1.9074.4.0512.1	Screw/Washer Assembly M5 x 12, Black	11
12	83.200701.02	Handle, Left, Black	1
13	83.200500.01	Cover, Top, Black	1
14	83.200502.01	Spillway, Fuel Tank	1
15	83.070100.01	Fuel Tank Cap	1
16	2.06.016	Clamp Ø8.7 x b8	4
17	83.070011.01	Fuel Pipe, Fuel Tank To Fuel Valve	1
18	21.070600.03	Fitting, Fuel Tank	1
19	2.08.068.2	Flange Bolt M5 x 13	6
20	83.071000.04	Fuel Tank, 6L	1
21	83.070300.01	Fuel Filter, Fuel Tank	1
22	83.070014.01	Pipe, Fuel Tank To Canister	1
23	1.845.4213	Screw, ST4.2 x 13	6
24	83.081400.01	Muffler Protector Assembly, Upper	1
25	83.081004.01	Plate	1
26	2.02.001	Nut M6, Long	2
27	28.100001.00	Gasket, Exhaust	1
28	83.101100.01	Muffler Assembly	1
29	46.101300.08	Spark Arrester Assembly	1
30	46.101503.08	Plate, Spark Arrester	1
31	1.9074.4.0514	Screw/Washer Assembly M5 x 14	2
32	1.97.1.06	Washer Ø6	1
33	1.93.06	Lock Washer Ø6	4
34	1.5789.0615	Flange Bolt M6 x 15	10
35	1.5789.0620	Flange Bolt M6 x 20	6
36	1.845.4816	Screw, ST4.8 x 16	6
37	1.845.4219	Screw, ST4.2 x 19	1
38	83.081500.01	Muffler Protector Assembly, Lower	1
39	83.200402.01	Protector, Rear Cover, Black	1
40	83.200401.01	Supporter, Rear Cover, Black	1
41	2.02.014	Nut M6, Square	12
42	2.02.010	Cage Nut M5	8
43	83.200701.03	Handle, Left, Black	1
44	83.200704.01.2	Bracket, Left, Black	1
45	83.201600.05	Supporter, Right	1
46	1.6187.1.08	Lock Nut M8, Flange	2
47	2.13.001	Bushing, Ø13.3 x Ø19.3 x 8	2
48	1.5789.0612.1	Flange Bolt M6 x 12, Black	4
49	83.200704.02.2	Bracket, Right, Black	1
50	2.03.001	Bushing, Ø13.3 x Ø19.3 x 2	2
51	2.03.002	Washer Ø13 x Ø20 x 2.5	2
52	2.08.002	Bolt M8 x 28	2
53	83.200701.04	Handle, Right, Black	1
54	2.02.002	Nut M6, T-Style	2
55	83.200705.01	Handle, Upper, Black	1
56	83.200705.02	Handle, Lower, Black	1

#	Part Number	Description	Qty
57	1.9074.3.0512.1	Screw/Washer Assembly M5 x 12, Black	3
58	1.5789.0635.1	Flange Bolt M6 x 35, Black	2
59	83.190006.01	Rubber Sleeve, End Cover	1
60	83.190003.01	End Cover, Generator	1
61	83.190001.01	Fan, Generator	1
62	2.02.006	Flange Nut, M14 x 1.5	1
63	83.191100.01	Rotor Assembly	1
64	1.5789.0645	Flange Bolt M6 x 45	4
65	83.191200.07	Stator Assembly	1
66	83.190002.01	End Cover, Mortor	1
67	28.690	Engine, 192cc	1
68	1.6177.1.08	Lock Nut M8, Flange	12
69	83.201600.02	Supporter, Left	1
70	83.201600.01	Supporter, Right	1
71	83.201200.01	Motor Mount	4
72	83.200607.01	Plug, Oil Drain Hole	1
73	1.6182.06	Lock Nut M6	6
74	83.200601.01	Base Setting Component	1
75	83.200609.02	Steel Plate 2	2
76	83.200609.01	Steel Plate 1	2
77	83.201400.01	Rubber Pad	2
78	83.201702.01	Plug, Wheel	2
79	1.894.1.12	Retaining Ring, Ø12	2
80	1.848.12	Washer Ø12	2
81	83.201701.02	5.5 in. Wheel, Right	1
82	83.201500.01	Axle	1
83	83.201701.01	5.5 in. Wheel, Left	1
84	83.200305.01	Spring Patch	5
85	83.200304.01	Rubber Seal, Muffler Cover	1
86	1.845.3595	Screw, ST3.5 x 9.5	8
87	83.200303.01	Muffler Cover, Black	1
88	83.200701.01	Handle, Right, Black	1
89	83.200302.01	Cover, Right Side, Black	1
90	2.08.075.1	Bolt M6 x 20, Black	2
91	83.070013.01	Pipe, Canister To Air Cleaner	1
92	83.070702.01	Support Arm	1
93	46.070700.00	Carbon Canister, 150CC	1
94	5.1320.030	Plastic Corrugated Pipe, Ø5 x Ø8 x 520	2
95	5.1900.019	Red Wire, Battery, 600 mm	1
96	83.200018.01	Holder, Control Unit and Battery	1
97	152.200013.02.3	Sheath 1, Rubber, Red	1
98	83.221000.90.92	Control Unit, 3.1KW, 120V/60Hz, Wireless Parallel	1
99	1.16674.0516	Flange Bolt, M5 x 16	1
100	81.220001.00	Protector, Control Unit	2
101	122.200013.04.3	Sheath 2, Rubber, Red	1
102	83.200908.01	Fixation Bar, Sponge	1
103	122.200904.00	Pinch, Rubber	1
104	9.1000.070	Battery, 149.5 x 85 x 94, 7AH	1
105	122.200013.04	Sheath, Rubber, Black	1
106	5.1900.060	Black Wire, Battery, 600 mm	1
107	1.16674.0512	Flange Bolt M5 x 12	1
108	5.1800.003	Rectifier	1
109	83.130200.01	Pull Choke Assembly	1
110	1.823.0410	Screw M4 x 10	1
111	87.070001.01	Knob, Fuel Valve	1
112	87.070021.01	Quick Coupler	1
113	1.823.0408	Screw M4 x 8	2
114	83.061200.01.2	Guide Plate, Rope, Black	1
115	83.200106.01	Protector, Front Cover	1
116	83.070400.01	Fuel Valve	1
117	1.97.1.05	Washer Ø5	3

SPECIFICATIONS

#	Part Number	Description	Qty
118	1.845.4819	Screw, ST4.8 x 19	2
119	83.070011.02	Fuel Pipe, Fuel Valve To Carburetor	1
120	2.06.023	Clip Ø20	2
121	87.070012.01	Pipe, 280mm	1
122	87.200101.01	Front Cover, Dual Fuel, Black	1
123	100264.21	Control Panel Assembly	1
124	5.1110.005	Receptacle, DC.12V	1
125	83.210001.00.3	Connect Port, 125V/25A, Red	1
126	83.210001.00.1	Connect Port, 125V/25A, Black	1
127	5.1000.000.3	Switch, Battery, Red	1
128	83.019.35.45	Control Panel, Yellow	1
129	1.9074.4.0414.1	Screw/Washer Assembly M4 x 14, Black	6
130	5.1200.308	8Amp Circuit Breaker, Push Button	1
131	5.1120.010	Receptacle 5-20R, Duplex	1
132	5.1210.920	A.C 20A Breaker, Push Button	1
133	5.1210.930	A.C 30A Breaker, Push Button	1
134	87.210002.01	Control Box	1
135	122.210003.01	Grommet	1
136	100264.21.10	Wire Assembly	1
137	1.9074.4.0512	Screw/Washer Assembly M5 x 12	1
138	1.9074.1.0535	Screw/Washer Assembly M5 x 35	1
139	5.1120.036	Receptacle TT-30	1
140	1.6177.1.04.1	Lock Nut M4, Flange, Black	6
141	1.818.0514.3	Screw M5 x 14, Green	2
142	83.210016.00	Speed Limiter	1
143	1.823.0325	Screw M3 x 25	2
144	5.1050.000	Switch	1
145	1.6170.03	Nut M3	2
146	5.1000.001	Ignition Switch, Red	1
147	5.1010.003.1	Switch, Economy, Black	1
148	1.845.3513	Screw, ST3.5 x 13	1
149	1.845.4816	Screw, ST4.8 x 16	1
150	5.1820.009	Charger	1
151	5.1800.004	Solenoid Valve Control Module	1
152	1.5783.0520.3	Bolt M5 x 20, Green	1
153	1.862.05	Lock Washer Ø5, Toothed	1
154	1.6170.05.3	Nut M5, Green	2
155	1.93.05.3	Lock Washer Ø5, Green	2
156	1.97.1.05.3	Washer Ø5, Green	2
157	87.130000.92	LPG Hose With Regulator 2.3 ft., 0.7 m	1
158	9.1700.008	Plug, USB 5V/2.4A	1

This page intentionally left blank.

EX2046 (IPR2025-00951)
Patent Owner Champion
CHAMPION0007397

Engine Parts Diagram

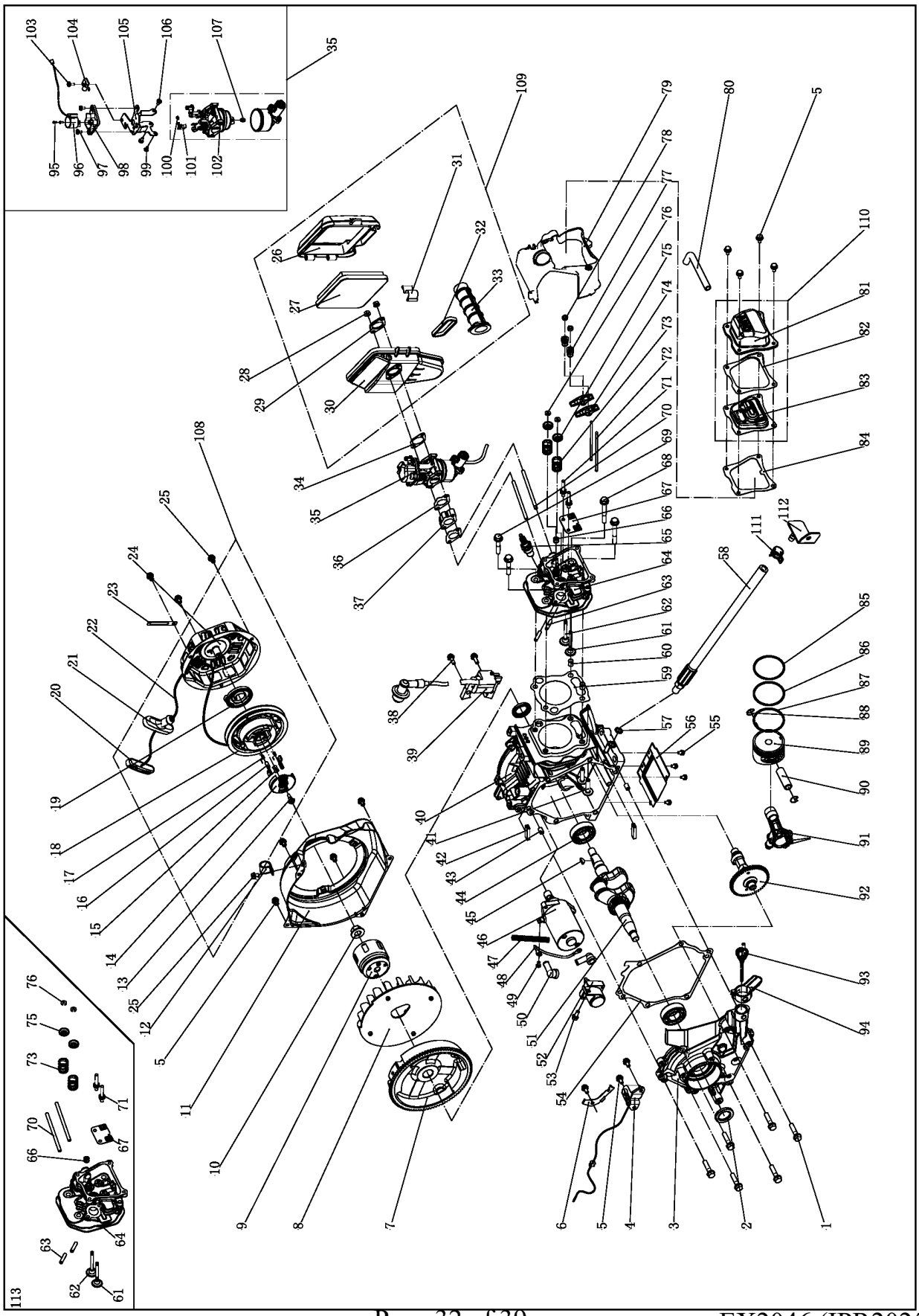

#	Part Number	Description	Qty
1	1.5789.0835	Flange Bolt, M8 x 35	6
2	2.11.014	Oil Seal	2
3	83.030007.01	Cover, Crankcase	1
4	83.127000.01	Oil Level Sensor	1
5	1.5789.0612	Flange Bolt, M6 x 12	11
6	83.030010.01	Plate, Coil	1
7	83.120100.04	Flywheel	1
8	83.080001.01	Cooling Fan	1
9	83.060001.01	Pulley, Starter	1
10	2.02.006	Flange Nut, M14 x 1.5	1
11	87.080100.01.2	Fan Cover	1
12	2.06.029	Clamp, Ø17	1
13	45.060008.00	Screw, Ratchet Guide	1
14	45.060007.00	Ratchet Guide	1
15	45.060009.00	Spring, Ratchet Guide	1
16	45.060002.00	Starter Ratchet, Iron	2
17	45.060003.00	Spring, Ratchet	2
18	21.061001.01	Reel, Recoil Starter	1
19	21.061005.00	Spring, Recoil Starter	1
20	81.061010.01	Holder, Rope	1
21	81.061006.00	Grip, Rubber	1
22	2.10.001.1	Rope, Ø4 x 1570, Black	1
23	2.05.050	Clamp, 100 mm, Wire	1
24	83.061100.01.2	Cover, Recoil Starter	1
25	1.5789.0608	Flange Bolt, M6 x 8	4
26	83.091200.01	Cover, Air Cleaner	1
27	83.091300.01	Element, Air Cleaner	1
28	1.6177.1.06	Lock Nut M6, Flange	2
29	83.090001.01	Flange, Steel	1
30	83.091100.01	Base, Air Cleaner	1
31	83.091006.01	Buckle	1
32	83.091002.02	Seal	1
33	83.090004.01	Pipe, Air Cleaner	1
34	83.130004.01	Gasket, Air Cleaner	1
35	28.130000.02	Carburetor Assembly	1
36	83.130002.01	Gasket, Insulator	2
37	83.130001.01	Insulator, Carburetor	1
38	1.5789.0620	Flange Bolt, M6 x 20	2
39	28.123000.00	Ignition Coil	1
40	28.030100.01	Crankcase	1
41	83.040013.01	Lifter, Valve	2
42	83.030013.01	Seal Strip, Crankcase Cover	2
43	2.04.002	Dawl Pin, 8 x 14	2
44	1.276.6205	Bearing 6205	2
45	2.14.017	Woodruff Key, 4 x 6.5 x 16	1
46	83.125100.01	Starter Motor	1
47	5.1320.010	Plastic Corrugated Pipe, Ø6.8 x Ø10 x 100	1
48	5.1900.065	Red Wire, 130 mm	1
49	1.9074.3.0508	Screw/Washer Assembly, M5 x 8	1
50	152.200013.01	Sheath, Rubber	2

#	Part Number	Description	Qty
51	83.050100.01	Crankshaft	1
52	83.125200.01	Relay, Starter	1
53	1.5789.0615	Flange Bolt, M6 x 15	1
54	83.030008.01	Gasket, Crankcase Cover	1
55	1.9074.4.0510	Screw/Washer Assembly, M5 x 10	4
56	83.080014.01.01	Air Guide Board	1
57	2.03.016	Washer, Ø10 x Ø16 x 1.5, Drain Bolt	1
58	83.032000.00	Hose, Oil Drain	1
59	28.030009.00	Gasket, Cylinder Head	1
60	2.04.003	Dowel Pin, Ø10 x 14	2
61	83.040006.01	Valve, Exhaust	1
62	28.040002.00	Valve, Intake	1
63	2.01.017	Stud Bolt, M6 x 32	2
64	28.010100.01	Cylinder Head	1
65	2.15.008	Spark Plug, F7RTC	1
66	83.040017.01	Oil Seal, Valve	1
67	83.040004.01	Guide Plate, Push Rod	1
68	1.5789.0865	Flange Bolt, M8 x 65	2
69	1.5789.0850	Flange Bolt, M8 x 50	2
70	2.01.020	Stud Bolt, M6 x 97	2
71	83.040010.01	Bolt, Rocker Arm	2
72	83.040005.01	Push Rod	2
73	83.040003.01	Spring, Valve	2
74	83.040009.01	Rocker Arm, Valve	2
75	83.040001.01	Retainer, Valve Spring	2
76	83.040014.01	Valve Collet	2
77	21.040020.00	Adjusting Nut, Valve	2
78	21.040021.00	Nut, Lock	2
79	83.080200.01	Air Shroud, Cylinder	1
80	23.020001.01	Breather Tube	1
81	83.021101.01	Cover, Cylinder Head	1
82	83.021001.01	Gasket, Cylinder Head Element	1
83	83.021200.01	Element Component, Head Cover	1
84	83.020002.01	Gasket, Cylinder Head Cover	1
85	28.050301.00	Ring, First Piston	1
86	28.050302.00	Ring, Second Piston	1
87	28.050303.00	Ring, Oil	1
88	2.09.002	Circlip, Ø16 x Ø1	2
89	28.050005.01	Piston	1
90	83.050003.01	Wrist Pin	1
91	83.050200.01	Connecting Rod Assembly	1
92	83.040100.01	Camshaft	1
93	83.031000.01	Oil Dipstick Assembly	1
94	83.030035.01	Oil Nipple	1
95	1.818.0306.1	Screw, M3 x 6, Black	2
96	81.132200.00	Stepper Motor	1
97	1.9074.1.0408	Screw/Washer Assembly, M4 x 8	2
98	82.132100.00	Base, Stepper Motor	1
99	1.819.0508	Screw, M5 x 8	1
100	81.130010.00	Spring, Connecter	1

EX2046 (IPR2025-00951)
Patent Owner Champion
CHAMPION0007399

SPECIFICATIONS

#	Part Number	Description	Qty
101	81.130008.00	Connecter, Choke Valve Axis	1
102	28.131000.02	Carburetor	1
103	1.9074.3.0512	Screw/Washer Assembly, M5 x 12	1
104	81.130007.00	Pressure Plate, Choke Control Line	1
105	83.130005.03	Support, Stepper Motor	1
106	1.9074.3.0508	Screw/Washer Assembly, M5 x 8	2
107	28.131017.00	Main Jet, Standard	1
	28.131017.00.01	Main Jet, Altitude	/
108	83.061000.01	Recoil Assembly	1
109	83.091000.01	Air Cleaner Assembly	1
110	83.021000.01	Cylinder Head Cover Assembly	1
111	2.06.013	Clamp, Ø13.5 × b10	1
112	45.030200.00	Support	1
113	28.010000.00	Cylinder Head Assembly	1

Problem	Cause	Solution
Generator will not start	No fuel	Add fuel
	Faulty spark plug	Replace spark plug
	Unit loaded during start up	Remove load from unit
Generator will not start; Generator starts but runs roughly	Low oil level	Fill crankcase to the proper level
		Place generator on a flat, level surface
	Choke in the wrong position	Adjust choke
	Spark plug wire loose	Attach wire to spark plug
Generator will not start wirelessly	Remote control battery is dead	Replace remote control battery
	Generator battery is dead	Recharge generator battery
	Battery switch is in the “OFF” position	Turn battery switch to “ON” position
Generator will not start electrically	Generator battery is dead	Recharge generator battery
	Battery switch is in the “OFF” position	Turn battery switch to “ON” position
Generator shuts down during operation	Out of fuel	Fill fuel tank
	Low oil level	Fill crankcase to the proper level. Place generator on a flat, level surface
Generator cannot supply enough power or overheating	Generator is overloaded	Review load and adjust. See “Power Management”
	Insufficient ventilation	Check for air restriction. Move to a well ventilated area
No AC output	Cable not properly connected	Check all connections
	Connected device is defective	Replace defective device
	Circuit breaker is open	Reset circuit breaker
	Loose wiring	Inspect and tighten wiring connections
	Other	Contact the help line
Repeated circuit breaker tripping	Overload	Review load and adjust. See “Power Management”
	Faulty cords or device	Check for damaged, bare or frayed wires. Replace defective device

For further technical support:

Technical Service
Mon – Fri 8:30 AM – 5:00 PM (PST/PDT)
Toll Free: 1-877-338-0999
tech@championpowerequipment.com

EX2046 (IPR2025-00951)
Patent Owner Champion
CHAMPION0007401

WARRANTY*

CHAMPION POWER EQUIPMENT
3 YEAR LIMITED WARRANTY

Warranty Qualifications

To register your product for warranty and FREE lifetime call center technical support please visit:
https://www.championpowerequipment.com/register

To complete registration you will need to include a copy of the purchase receipt as proof of original purchase. Proof of purchase is required for warranty service. Please register within ten (10) days from date of purchase.

Repair/Replacement Warranty

CPE warrants to the original purchaser that the mechanical and electrical components will be free of defects in material and workmanship for a period of three years (parts and labor) from the original date of purchase and 270 days (parts and labor) for commercial and industrial use. Transportation charges on product submitted for repair or replacement under this warranty are the sole responsibility of the purchaser. This warranty only applies to the original purchaser and is not transferable.

Do Not Return The Unit To The Place Of Purchase

Contact CPE's Technical Service and CPE will troubleshoot any issue via phone or e-mail. If the problem is not corrected by this method, CPE will, at its option, authorize evaluation, repair or replacement of the defective part or component at a CPE Service Center. CPE will provide you with a case number for warranty service. Please keep it for future reference. Repairs or replacements without prior authorization, or at an unauthorized repair facility, will not be covered by this warranty.

Warranty Exclusions

This warranty does not cover the following repairs and equipment:

Normal Wear

Products with mechanical and electrical components need periodic parts and service to perform well. This warranty does not cover repair when normal use has exhausted the life of a part or the equipment as a whole.

Installation, Use and Maintenance

This warranty will not apply to parts and/or labor if the product is deemed to have been misused, neglected, involved in an accident, abused, loaded beyond the product's limits, modified, installed improperly or connected incorrectly to any electrical component. Normal maintenance is not covered by this warranty and is not required to be performed at a facility or by a person authorized by CPE.

Other Exclusions

This warranty excludes:

- Cosmetic defects such as paint, decals, etc.
- Wear items such as filter elements, o-rings, etc.
- Accessory parts such as starting batteries, and storage covers.
- Failures due to acts of God and other force majeure events beyond the manufacturer's control.
- Problems caused by parts that are not original Champion Power Equipment parts.

When applicable, this warranty does not apply to products used for prime power in place of a utility.

Limits of Implied Warranty and Consequential Damage

Champion Power Equipment disclaims any obligation to cover any loss of time, use of this product, freight, or any incidental or consequential claim by anyone from using this product.
THIS WARRANTY AND THE ATTACHED U.S. EPA and/or CARB EMISSION CONTROL SYSTEM WARRANTIES (WHEN APPLICABLE) ARE IN LIEU OF ALL OTHER WARRANTIES, EXPRESS OR IMPLIED, INCLUDING WARRANTIES OF MERCHANTABILITY OR FITNESS FOR A PARTICULAR PURPOSE.

A unit provided as an exchange will be subject to the warranty of the original unit. The length of the warranty governing the exchanged unit will remain calculated by reference to the purchase date of the original unit.

This warranty gives you certain legal rights which may change from state to state or province to province. Your state or province may also have other rights you may be entitled to that are not listed within this warranty.

Contact Information

Address

Champion Power Equipment, Inc.
12039 Smith Ave.
Santa Fe Springs, CA 90670 USA
www.championpowerequipment.com

Customer Service

Toll Free: 1-877-338-0999
info@championpowerequipment.com
Fax no.: 1-562-236-9429

Technical Service

Toll Free: 1-877-338-0999
tech@championpowerequipment.com
❗ EMERGENCY 24 HOUR SUPPORT: 1-562-204-1188

*Except as otherwise stipulated in any of the following enclosed Emission Control System Warranties (when applicable) for the Emission Control System: U.S. Environment Protection Agency (EPA) and/or California Air Resources Board (CARB).

EX2046 (IPR2025-00951)
Patent Owner Champion
CHAMPION0007402

CHAMPION POWER EQUIPMENT, INC. (CPE), THE UNITED STATES ENVIRONMENT PROTECTION AGENCY (U.S. EPA) AND THE CALIFORNIA AIR RESOURCES BOARD (CARB) EMISSION CONTROL SYSTEM WARRANTY

Your Champion Power Equipment (CPE) engine complies with both the U.S. EPA and state of California Air Resources Board (CARB) Exhaust and Evaporative emissions regulations.

YOUR WARRANTY RIGHTS AND OBLIGATIONS:

The US EPA, California Air Resources Board, and CPE are pleased to explain the Federal and California Exhaust and Evaporative Emission Control Systems Warranty on your 2020 small off-road engine (SORE) and engine powered equipment. In California, new equipment that use small off-road engines (SORE) must be designed, built and equipped to meet the State's stringent anti smog standards. In the other states, new engines and equipment must be designed, built and equipped, at the time of sale, to meet U.S. EPA regulations for small off-road engines (SORE). CPE must warrant the exhaust and evaporative emission control system on your small off-road engine (SORE) for the period listed below, provided there has been no abuse, neglect, unapproved modification, or improper maintenance of your equipment leading to the failure of the exhaust and evaporative emission control systems.

Your evaporative emission control system may include parts such as: carburetors, fuel tanks, fuel lines, (for liquid fuel and fuel vapors), fuel caps, valves, canisters, filters, clamps, connectors, and other associated components. Also included for your exhaust emission control system may be fuel-injection system, the ignition system, catalytic converter and other exhaust emission related assemblies. Where a warrantable condition exits, CPE will repair your small off-road engine (SORE) at no cost to you including diagnosis, parts and labor.

MANUFACTURER'S WARRANTY COVERAGE:

This exhaust and evaporative emission control system is warranted for two years. If any exhaust and evaporative, emission related part on your engine or equipment is defective in, the part will be repaired or replaced by CPE.

OWNER WARRANTY RESPONSIBILITIES:

As the small off-road engine (SORE) owner, you are responsible for the performance of the required maintenance listed in your Owner's Manual. CPE recommends that you retain all your receipts covering maintenance on your small off-road engine (SORE), but CPE cannot deny warranty coverage solely for the lack of receipts.

As the small off-road engine (SORE) owner, you should be aware that CPE may deny you warranty coverage if your small, off-road engine (SORE) or a part has failed due to abuse, neglect, improper maintenance or unapproved modifications.

You are responsible for presenting your small off-road engine to an Authorized CPE distribution center, service center or alternative service outlet as described in (3)(f.) below or CPE dealer or CPE, Santa Fe Springs, Ca. as soon as the problem exists. The warranty repairs shall be completed in a reasonable amount of time, not to exceed 30 days.

If you have any questions regarding your warranty coverage, you should contact:

Champion Power Equipment, Inc.
Customer Service
12039 Smith Ave.
Santa Fe Springs, CA 90670
1-877-338-0999
tech@championpowerequipment.com

EX2046 (IPR2025-00951)
Patent Owner Champion
CHAMPION0007403

EXHAUST AND EVAPORATIVE EMISSION CONTROL SYSTEM WARRANTY

The following are specific provisions relative to your Exhaust and Evaporative Emission Control System (ECS) Warranty Coverage.

1. **APPLICABILITY:** This warranty shall apply to 1995 and later model year California small off-road engines (SORE) (for other states, 1997 and later model year engines). The ECS Warranty Period shall begin on the date the new engine or equipment is delivered to its original, end-use purchaser, and shall continue for 24 consecutive months thereafter.

2. **GENERAL EMISSIONS WARRANTY COVERAGE**
   CPE warrants to the original, end-use purchaser of the new engine or equipment and to each subsequent purchaser that each of its small off-road engines (SORE) is:

   2a. Designed, built and equipped to conform to U.S. EPA emissions standards for spark-ignited engines at or below 19 kilowatts and all applicable regulations adopted by the California Air Resources Board, and

   2b. Free from defects in materials and workmanship that cause the failure of a warranted part to be identical in all material respects to the part as described in the engine manufacturer's application for certification for a period of two years.

3. **THE WARRANTY ON EXHAUST AND EVAPORATIVE EMISSION-RELATED PARTS WILL BE INTERPRETED AS FOLLOWS:**

   3a. Any warranted part that is not scheduled for replacement as required maintenance in the Owners Manual shall be warranted for the ECS Warranty Period. If any such part fails during the ECS Warranty Period, it shall be repaired or replaced by CPE according to Subsection "d" below. Any such part repaired or replaced under the ECS Warranty shall be warranted for any remainder of the ECS Warranty Period.

   3b. Any warranted, exhaust and evaporative emissions-related part which is scheduled only for regular inspection as specified in the Owners Manual shall be warranted for the ECS Warranty Period. A statement in such written instructions to the effect of "repair or replace as necessary", shall not reduce the ECS Warranty Period. Any such part repaired or replaced under the ECS Warranty shall be warranted for the remainder of the ECS Warranty Period.

   3c. Any warranted, exhaust and evaporative emissions-related part which is scheduled for replacement as required maintenance in the Owner's Manual shall be warranted for the period of time prior to the first scheduled replacement point for that part. If the part fails prior to the first scheduled replacement, the part shall be repaired or replaced by CPE according to Subsection "d" below. Any such exhaust and evaporative emissions-related part repaired or replaced under the ECS Warranty, shall be warranted for the remainder of the ECS Warranty Period prior to the first scheduled replacement point for such emissions-related part.

   3d. Repair or replacement of any warranted, exhaust and evaporative emissions-related part under this ECS Warranty shall be performed at no charge to the owner at a CPE Authorized Service Outlet.

   3e. The owner shall not be charged for diagnostic labor which leads to the determination that a part covered by the ECS Warranty is in fact defective, provided that such diagnostic work is performed at a CPE Authorized Service Outlet.

   3f. CPE shall pay for covered exhaust and evaporative emissions warranty repairs at non-authorized service outlets under the following circumstances:

      i. The service is required in a population center with a population over 100,000 according to U.S. Census 2000 without a CPE Authorized Service Outlet AND

      ii. The service is required more than 100 miles from a CPE Authorized Service Outlet. The 100 mile limitation does not apply in the following states: Alaska, Arizona, Colorado, Hawaii, Idaho, Montana, Nebraska, Nevada, New Mexico, Oregon, Texas, Utah and Wyoming.

   3g. CPE shall be liable for damages to other original engine components or approved modifications proximately caused by a failure under warranty of an emission-related part covered by the ECS Warranty.

   3h. Throughout the ECS Warranty Period, CPE shall maintain a supply of warranted exhaust and evaporative emission-related parts sufficient to meet the expected demand for such exhaust and evaporative emission-related parts.

   3i. Any CPE Authorized and approved exhaust and evaporative emission-related replacement part may be used in the performance of any ECS Warranty maintenance or repair and will be provided without charge to the owner. Such use shall not reduce CPE's warranty obligation.

   3j. Unapproved add-on or modified parts may not be used to modify or repair a CPE engine. Such use voids this ECS Warranty and shall be sufficient grounds for disallowing an ECS Warranty claim. CPE shall not be liable hereunder for failures of any warranted parts of a CPE engine caused by the use of such an unapproved add-on or modified part.

EX2046 (IPR2025-00951)
Patent Owner Champion
CHAMPION0007404

EMISSION-RELATED PARTS INCLUDE THE FOLLOWING: (using those portions of the list applicable to the engine)

Systems covered by this warranty	Parts Description
Fuel Metering System	Fuel regulator, Carburetor and internal parts
Air Induction System	Air cleaner, Intake manifold
Ignition System	Spark plug and parts, Magneto ignition system
Exhaust System	Exhaust manifold, catalytic converter
Miscellaneous Parts	Tubing, Fittings, Seals, Gaskets, and Clamps associated with these listed systems.
Evaporative Emissions	Fuel Tank, Fuel Cap, Fuel Lines (for liquid fuel and fuel vapors), Fuel Line Fittings, Clamps, Pressure Relief Valves, Control Valves, Control Solenoids, Electronic Controls, Vacuum Control Diaphragms, Control Cables, Control Linkages, Purge Valves, Gaskets, Liquid/Vapor Separator, Carbon Canister, Canister Mounting Brackets, Carburetor Purge Port Connector

TO OBTAIN WARRANTY SERVICE:

You must take your CPE engine or the product on which it is installed, along with your warranty registration card or other proof of original purchase date, at your expense, to any Champion Power Equipment dealer who is authorized by Champion Power Equipment, Inc. to sell and service that CPE product during his normal business hours. Alternate service locations defined in Section (3)(f.) above must be approved by CPE prior to service. Claims for repair or adjustment found to be caused solely by defects in material or workmanship will not be denied because the engine was not properly maintained and used.

If you have any questions regarding your warranty rights and responsibilities, or to obtain warranty service, please write or call Customer Service at Champion Power Equipment, Inc.

Champion Power Equipment, Inc.
12039 Smith Ave.
Santa Fe Springs, CA 90670
1-877-338-0999
Attn.: Customer Service
tech@championpowerequipment.com

EX2046 (IPR2025-00951)
Patent Owner Champion
CHAMPION0007405