QUINN EMANUEL URQUHART & SULLIVAN, LLP
David M. Grable (SBN 237765)
davegrable@quinnemanuel.com
Lauren Lindsay (SBN 280516)
laurenlindsay@quinnemanuel.com
865 South Figueroa Street, 10th Floor
Los Angeles, California 90017-2543
Telephone: (213) 443-3000
Facsimile: (213) 443-3100

QUINN EMANUEL URQUHART & SULLIVAN, LLP
Eric Huang (*pro hac vice*)
erichuang@quinnemanuel.com
Jason Williams (*pro hac vice*)
jasonwilliams@quinnemanuel.com
295 5th Avenue
New York, NY 10016-7103
Telephone: (212) 849-7000
Facsimile: (212) 849-7100

Attorneys for Plaintiff
Harbor Freight Tools USA, Inc.

UNITED STATES DISTRICT COURT
CENTRAL DISTRICT OF CALIFORNIA, WESTERN DIVISION

HARBOR FREIGHT TOOLS USA, INC., Plaintiff, vs. CHAMPION POWER EQUIPMENT, INC., Defendant.	Case No. 2:24-cv-08722-SVW-AS **HARBOR FREIGHT'S OPENING CLAIM CONSTRUCTION BRIEF** Hearing Date: September 30, 2025 Time: 9:30 a.m.

TABLE OF CONTENTS

Page

I. INTRODUCTION 1
II. TECHNICAL BACKGROUND 1
A. Patent Subject Matter 1
B. The Patents-In-Suit 2
III. LEGAL STANDARDS 3
A. Intrinsic Evidence 3
B. Extrinsic Evidence 5
IV. DISPUTED TERMS 5
A. Individual Terms Requiring Construction 6
1. "selector switch" 6
2. "valve assembly" 9
3. "a mechanical fuel valve" 11
4. "fuel lockout apparatus" 12
5. "from coupling"/"coupling"/"to couple" 15
6. "communicate"/"communication" 16
7. "switch . . . to [enable changing/change] operation of the engine between gaseous fuel and liquid fuel" 17
8. "rotating mechanical valve" 19
9. "pressure regulator" 20
10. "integral components of" 21
B. Indefinite Terms 22
1. "gaseous cutoff" 22
2. "coupled to [verb]" 24
V. CONCLUSION 26

TABLE OF AUTHORITIES

Page

Cases

3M Innovative Properties Co. v. Avery Dennison Corp.,
350 F.3d 1365 (Fed. Cir. 2003) 4

Advanced Fiber Techs. (AFT) Tr. v. J & L Fiber Servs., Inc.,
674 F.3d 1365 (Fed. Cir. 2012) 10, 12, 16

AIA Eng'g. Ltd. v. Magotteaux Int'l. SIA,
657 F.3d 1264 (Fed. Cir. 2011) 4

Baran v. Medical Device Technologies, Inc.,
616 F.3d 1309 (Fed. Cir. 2010) 15

C.R. Bard, Inc. v. U.S. Surgical Corp.,
388 F.3d 858 (Fed. Cir. 2004) 5

Continental Circuits LLC v. Intel Corp.,
915 F.3d 788 (Fed. Cir. 2019) 3, 4, 12, 16

Fintiv, Inc. v. PayPal Holdings, Inc.,
134 F.4th 1377 (Fed. Cir. 2025) 23

Grace Instrument Indus., LLC v. Chandler Instruments Co.,
LLC, 57 F.4th 1001 (Fed. Cir. 2023) 3, 5

Honeywell Int'l, Inc. v. Universal Avionics Sys. Corp.,
493 F.3d 1358 (Fed. Cir. 2007) 8

Horizon Pharma, Inc. v. Dr. Reddy's Lab'ys Inc.,
839 F. App'x 500 (Fed. Cir. 2021) 25, 26

Intel Corp. v. Qualcomm Inc.,
21 F.4th 801 (Fed. Cir. 2021) 3

Mantissa Corp. v. First Fin. Corp.,
No. 2022-1963, 2024 WL 607717 (Fed. Cir. Feb. 14, 2024) 23, 24, 25

Markman v. Westview Instruments, Inc.,
52 F.3d 967 (Fed. Cir. 1995) 4

Medicines Company v. Mylan, Inc.,
853 F.3d 1296 (Fed. Cir. 2017) 24

Nature Simulation Sys. Inc. v. Autodesk, Inc.,
50 F.4th 1358 (Fed. Cir. 2022) 22

Nautilus, Inc. v. Biosig Instruments, Inc.,
572 U.S. 898 (2014) 22, 23, 24, 25

O2 Micro Int'l Ltd. v. Beyond Innovation Tech. Co.,
521 F.3d 1351 (Fed. Cir. 2008) 1, 15, 17, 19, 20

Phillips v. AWH Corp.,
415 F.3d 1303 (Fed. Cir. 2005) (*en banc*) 1, 3, 4, 5, 6, 9, 11, 16, 17, 21

Seabed Geosolutions (US) Inc. v. Magseis FF LLC,
8 F.4th 1285 (Fed. Cir. 2021) 5

Thorner v. Sony Computer Entm't Am. LLC,
669 F.3d 1362 (Fed. Cir. 2012) 8

TVnGO Ltd. (BVI) v. LG Elecs. Inc.,
861 F. App'x 453 (Fed. Cir. 2021) 22, 25

Williamson v. Citrix Online, LLC,
792 F.3d 1339 (Fed. Cir. 2015) 13

Statutes

35 U.S.C. § 112(f) 12, 13

I. INTRODUCTION

Plaintiff Harbor Freight Tools USA, Inc. ("HFT") respectfully submits this opening claim construction brief to assist the Court in determining the meaning of twelve disputed claim terms in the patents at issue. This case is about trivial features for multi-fuel generators that Defendant Champion Power Equipment, Inc. ("Champion") purports to have invented. At the appropriate time, HFT will demonstrate that Champion's patents are invalid and, even if valid, HFT did not infringe. To reach those arguments, disputed claims in the patents must be construed.

Claim construction is a question of law, and the Court is required to resolve disputes regarding claim term construction. *O2 Micro Int'l Ltd. v. Beyond Innovation Tech. Co.*, 521 F.3d 1351, 1360-63 (Fed. Cir. 2008). "Intrinsic evidence" is the most important tool for construing disputed claims. *Phillips v. AWH Corp.*, 415 F.3d 1303, 1315-19 (Fed. Cir. 2005) (*en banc*). Intrinsic evidence includes the patent claim language itself, the patent "specification" (the patent's text and drawings), and the statements made during patent prosecution.

As demonstrated below, HFT's proposed constructions align with the intrinsic evidence and give the terms their proper meaning. Champion, on the other hand, has repeatedly invoked the empty term "plain and ordinary meaning" in an attempt to dramatically expand the scope of the claims. For the reasons set forth below and as will be demonstrated at the hearing, HFT's constructions should be adopted.

II. TECHNICAL BACKGROUND

A. Patent Subject Matter

The patents-in-suit[1] disclose as their subject matter generators that can use more than one fuel type, e.g., gasoline and propane.[2] Generators contain an internal

[1] The patents-in-suit are referred to herein using the patent number's last three digits. The full patent numbers are reflected in Exhibit A.

[2] Propane is a gaseous fuel used to fuel grills and appliances. It is stored as a liquid in pressurized containers and is also called LPG (liquefied petroleum gas).

combustion engine to use fuel to create electricity when power is unavailable. The internal combustion engine in the generator burns compressed air and fuel in cylinders, creating explosions that drive pistons up and down. This motion turns a crankshaft, which spins an alternator. The alternator uses spinning magnets near wire coils to convert the mechanical rotation into electrical current.

To be clear, Champion did not invent multi-fuel engines or generators. Multi-fuel engines have been used for a century, with manufacturers offering gasoline and propane compatibility in engines since the early 1900s.[3] Multi-fuel generators use well understood concepts, known and refined over a century of engineering improvements across multiple industries. In multi-fuel generators, one fuel is used at a time, and users can choose a different fuel by actuating valves.

A challenge that multi-fuel systems face is avoiding simultaneous use of more than one fuel source, which can result in inefficient combustion or equipment damage. This challenge was widely recognized for decades before the Champion patents, and several other developers created conventional mechanical and electrical solutions to avoid simultaneous delivery of different fuel sources to a generator. It is in this well-tread area that Champion's purported inventions sit.

B. The Patents-In-Suit

There are four sets of "related"[4] patents among the patents-in-suit:

- 2013 Family: '101, '667, '390, and '896 patents share a specification, each claiming priority to 2013. This family discloses a sliding barrier to prevent access to more than one valve handle at a time.

[3] *E.g.*, U.S. Patent No. 1,931,698 ("Holzapfel"), issued October 24, 1933.

[4] "Priority" refers to the filing date used to identify prior art that may invalidate the patent. When patentees file certain types of "continuing" applications, they can claim priority back to an earlier "parent" application, meaning multiple patents may share the same specification text and priority date. These "related" patents often share common priority dates and specifications and are sometimes grouped as a "family."

- June 2015 Family: '780, '654, '985, '970, and '895 patents share a specification, each claiming priority to June 2015. This family discloses a flange used to prevent connection to a second fuel inlet when the flange is positioned with a valve that allows a first fuel to flow.
- October 2015 Family: '398 and '145 patents share a specification, with information added to the June 2015 Family specification. This Family discloses a valve to stop liquid fuel flow in the carburetor; and
- October 2016 Family: '034 and '120 patents share a specification, which added more detail to the '398 specification. This Family discloses a circuit used to control the valve in the carburetor.

Although the patents-in-suit purport to solve multi-fuel system problems, they use well-known fuel system components—valves, pressure regulators, electrical switches, and physical barriers—in conventional arrangements to prevent simultaneous fuel delivery. These are existing engineering solutions to ensure only one fuel source operates at a time that would naturally occur (and had occurred) to engineers familiar with standard fuel system design principles.

III. LEGAL STANDARDS

Claim construction is a question of law. *Intel Corp. v. Qualcomm Inc.*, 21 F.4th 801, 808 (Fed. Cir. 2021). "[T]he claims of a patent define the invention to which the patentee is entitled the right to exclude." *Phillips*, 415 F.3d at 1312. Claim terms are generally given "the meaning that the term would have to a person of ordinary skill in the art ["POSITA"] in question at the time of the invention, i.e., as of the effective filing date" and considering all intrinsic evidence. *Id.* at 1312–13. In performing claim construction, courts consider intrinsic and extrinsic evidence. *Id.* at 1317.

A. Intrinsic Evidence

Intrinsic evidence includes the patent's claims, specification, and prosecution history. *Continental Circuits LLC v. Intel Corp.*, 915 F.3d 788, 795 (Fed. Cir. 2019); *Grace Instrument Indus., LLC v. Chandler Instruments Co.*, LLC, 57 F.4th 1001, 1008

(Fed. Cir. 2023). From this list of sources, "the claims themselves provide substantial guidance as to the meaning of particular claim terms." *Phillips*, 415 F.3d at 1314. However, the claims "do not stand alone," but are part of "'a fully integrated written instrument,' consisting principally of a specification that concludes with the claims[, and therefore] 'must be read in view of the specification, of which they are a part.'" *Id.* at 1315 (quoting *Markman v. Westview Instruments, Inc.*, 52 F.3d 967, 978-79 (Fed. Cir. 1995)). "[T]he specification 'is always highly relevant to the claim construction analysis. Usually, it is dispositive; it is the single best guide to the meaning of a disputed term.'" *Id.* (citation omitted).

The Federal Circuit "has recognized that 'the specification may reveal a special definition given to a claim term by the patentee that differs from the meaning it would otherwise possess.' [] When the patentee acts as its own lexicographer, that definition governs." *Continental Circuits*, 915 F.3d at 796. "[T]he definition in the specification controls the meaning . . . regardless of any potential conflict with the term's ordinary meaning as reflected in technical dictionaries." *3M Innovative Properties Co. v. Avery Dennison Corp.*, 350 F.3d 1365, 1374 (Fed. Cir. 2003); *see also AIA Eng'g. Ltd. v. Magotteaux Int'l. SIA*, 657 F.3d 1264, 1276–79 (Fed. Cir. 2011) (noting "patentee acted as his own lexicographer" despite contrary ordinary meaning).

The Federal Circuit has also recognized that "the specification may reveal an intentional disclaimer, or disavowal, of claim scope." *Phillips*, 415 F.3d at 1316. In other words, the patentee has expressly narrowed the scope of a claim term. "In those situations, it is again the inventor's disavowal that is dispositive of the claim construction." *Continental Circuits*, 915 F.3d at 797. Likewise, "the prosecution history can often inform the meaning of the claim language by demonstrating how the inventor understood the invention and whether the inventor limited the invention in

the course of prosecution, making the claim scope narrower than it would otherwise be." *Phillips*, 415 F.3d at 1317.[5]

"If the meaning of a claim term is clear from the intrinsic evidence, there is no reason to resort to extrinsic evidence." *Seabed Geosolutions (US) Inc. v. Magseis FF LLC*, 8 F.4th 1285, 1287 (Fed. Cir. 2021).

B. Extrinsic Evidence

Although the Federal Circuit has emphasized the importance of intrinsic evidence in claim construction, it has also authorized reliance on extrinsic evidence, which "consists of all evidence external to the patent and prosecution history, including expert and inventor testimony, dictionaries, and learned treatises." *Phillips*, 415 F.3d at 1317. However, while extrinsic evidence "can shed useful light on the relevant art," it is "less significant than the intrinsic record" in determining "the legally operative meaning of disputed claim language." *Id.* (quoting *C.R. Bard, Inc. v. U.S. Surgical Corp.*, 388 F.3d 858, 862 (Fed. Cir. 2004)).

Moreover, extrinsic evidence cannot be used to contradict the intrinsic evidence or support a claim construction that conflicts with intrinsic evidence. *Grace Instrument*, 57 F.4th at 1010 (district court erred in relying on extrinsic evidence—dictionary definitions—that contradicted intrinsic record). Thus, while extrinsic evidence may supplement the intrinsic evidence, it cannot override clear teachings from the specification, claims, or prosecution history.

IV. DISPUTED TERMS

For each disputed term, Champion seeks to construe it with the hollow phrase "plain and ordinary meaning," but that is not appropriate here, as explained below. The disputed terms fall into four categories: (1) terms where Champion has acted as

[5] A patent applicant often narrows a claim scope during prosecution to avoid prior art and get the patent approved. Patent owners sometimes then try to broaden the claim scope in claim construction—as Champion is doing here—to cause their patents to cover more ground than was actually approved or intended during patent prosecution.

its own lexicographer, providing a different definition from the term's ordinary meaning, (2) terms subject to prosecution disclaimers that limit their scope, (3) a term that should be construed as a means-plus-function limitation, and (4) terms that are indefinite.

A. Individual Terms Requiring Construction

1. "selector switch"[6]

HFT's Proposed Construction	Champion's Proposed Construction
"a movable component whose positioning enables subsequent user selection of only one fuel source"	Plain and ordinary meaning or "a device or mechanism for choosing an option or a device or mechanism for making a selection or choice"

The term "selector switch" requires construction because within the patent, Champion defined the term differently from the common understanding of "switch." *See Phillips*, 415 F.3d at 1317-19. A "switch" ordinarily refers to "[a] mechanical device for opening and closing an electric circuit."[7] However, the specification uses "selector switch" to describe something different—a mechanical sliding barrier that physically blocks access to valve handles rather than making or breaking electrical connections. Indeed, even Champion's alternative construction is inconsistent with the ordinary meaning; however, Champion proposes a construction contrary to the intrinsic evidence.

Most of the asserted claims of the '101 family require "a selector switch positioned on the valve assembly to allow a user to manually select one of the first fuel flow and the second fuel flow." The claim language makes clear that the "selector switch" is distinct from and "positioned on" the valve assembly. The specification states that "the fuel selector 22 not only provides for selection of a desired fuel source

[6] This term appears in the asserted claims of the '101, '667, '390, '896 patents.

[7] Ex. G, *Switch*, (c), G.H.F. Nayler, DICTIONARY OF MECHANICAL ENGINEERING 385 (rev. ed. 2006).

18, 20 for supplying fuel to engine 12, but also selectively restricts the selection of a fuel source so as to enable the use of only one fuel at a time." '101 pat., col. 3:63-67; *see also id.*, col. 4:4-9 (discussing Figs. 3-6). The specification expressly recites the "selector switch" as a term referring to a sliding component that does not actually "select" but rather permits (or prevents) a subsequent selection.

The specification further states:

- "the selector switch 30 can be slideably coupled to the selector plate 28—with the selector switch 30 being ***translatable in a linear fashion*** by way of its mating with the slots 44." '101 pat., col. 5:18-21 (emphasis added).
- "The selector switch 30 is translatable in a horizontal motion . . . to selectively ***restrict actuation*** of the first and second fuel valve handles 34, 38." *Id.*, col. 5:51-55 (emphasis added).
- "The interaction of the selector switch 30 with the first and second valve assemblies 24, 26—with selector switch 30 sliding back and forth to selectively cover/engage first and second valve assemblies 24, 26—***prohibits both valve assemblies from being in the 'ON' position at the same time***." *Id.*, col. 6:66-7:4 (emphasis added).

The '101 patent figures (annotated below) show this sliding component:

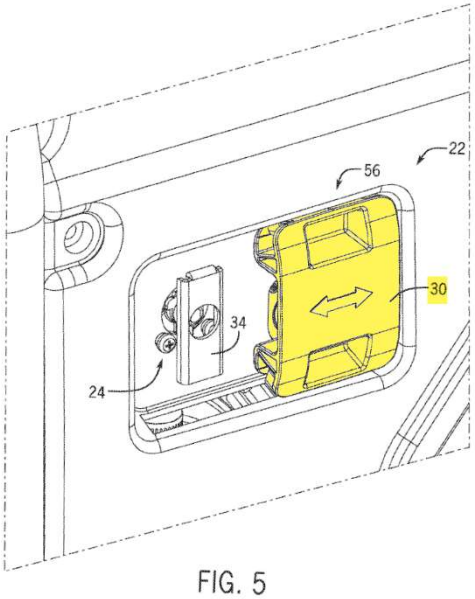

FIG. 5

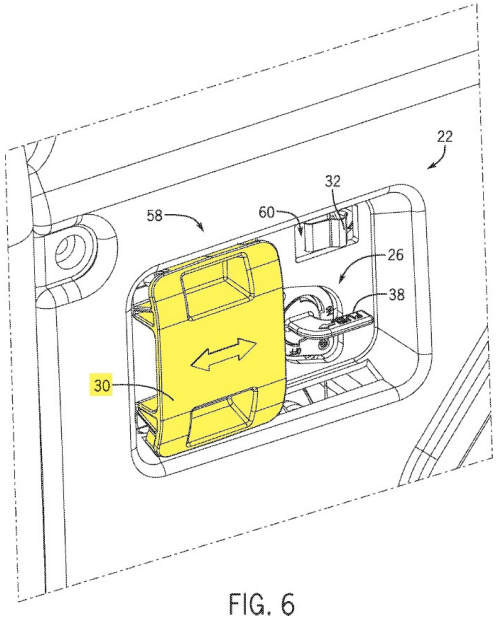

FIG. 6

This usage is different than an electrical switch used to open and close a circuit. By defining "selector switch" as a structural block "translatable in a linear fashion" "restricting actuation" and "prohibit[ing] both valve assemblies from being in the 'ON' position at the same time," Champion "clearly set forth a definition of the disputed claim term other than its plain and ordinary meaning." *Thorner v. Sony Computer Entm't Am. LLC*, 669 F.3d 1362, 1365 (Fed. Cir. 2012). Where a patentee defines a claim term, the patentee's definition governs, even if contrary to the conventional meaning. *Honeywell Int'l, Inc. v. Universal Avionics Sys. Corp.*, 493 F.3d 1358, 1361 (Fed. Cir. 2007). Having clearly defined "selector switch" in the patent, Champion cannot now claim the benefits of a plain meaning interpretation or propose an alternative construction that ignores its definition at the time the patent was issued.

Dr. Gregory Shaver, HFT's expert and a professor of Mechanical Engineering at Purdue University, confirms that "selector switch" would have been understood by a POSITA not to have its ordinary meaning but rather to refer to a movable component

whose positioning enables subsequent user selection of only one fuel source, such as a barrier shown as item 30 in the patent figures. *See* Ex. B, Shaver Decl. ¶¶ 39-51.

Champion's proposed construction fails for three reasons. First, its alternative construction—"a device or mechanism for ***choosing*** an option and a device or mechanism for ***making a selection or choice***"—conflicts with the common understanding of "switch," which Champion effectively concedes cannot apply here. Second, to the extent Champion's alternative covers a mechanism that actuates a valve, it is inconsistent with the intrinsic evidence, which defines the "selector switch" as a component that blocks or permits valve access *rather than* makes selections by actuating a valve. Third, Champion's construction seeks to broaden the claimed invention beyond what was disclosed. Specifically, Champion's proposal encompasses any device that performs the function of "choosing" or "making a selection," extending well beyond the use of "selector switch" in the patent. *See Phillips*, 415 F.3d at 1315-16. Champion cannot point to anything in the specification that supports its current construction.

2. "valve assembly"

HFT's Proposed Construction	Champion's Proposed Construction
"at least one fuel valve and corresponding valve handle, separate from the selector switch"	Plain and ordinary meaning or "one or more valves arranged together"

The term "valve assembly" requires construction because, during prosecution, Champion defined "valve assembly" to require both a valve and corresponding handle as integrated structural elements, and confirmed that the valve assembly must be separate and distinct from the selector switch. Champion's proposed construction fails to capture these specific limitations established during prosecution. *See Phillips*, 415 F.3d at 1317.

Claim 1 of the '101 patent is exemplary and recites a fuel selector comprising:

a ***valve assembly*** …; and

> a ***selector switch*** positioned on the valve assembly to allow a user to manually select one of the first fuel flow and the second fuel flow ....

The claim language makes clear that the valve assembly is distinct from the "selector switch." *See, e.g.*, '101 pat., claims 1, 17; '896 pat., claim 30.

The specification establishes that the term requires ***both*** valve and handle components as integrated structural elements: "First valve assembly 24 ***includes a first fuel valve handle 34*** that is operatively connected to a first fuel valve 36 to control an opening and closing of the first fuel valve. Similarly, second valve assembly 26 ***includes a second fuel valve handle 38*** that is operatively connected to a second fuel valve 40 to control an opening and closing of the second fuel valve." '101 pat., col. 4:24-30 (emphasis added); *see also id*., col. 4:49-58. During prosecution, to distinguish their claim from prior art, Champion confirmed that the "claimed 'valve assembly'" is described with handles. Ex. C, '101 pat. File History, Appeal Brief (March 8, 2019), p. 6-8; *see also* '101 pat., col. 4:24-30. Champion also clarified that "claim 1 distinctly calls for a valve assembly and a selector switch as two separate and distinct elements/structures -with claim 1 clearly and separately defining relationship therebetween. These elements should not be confused with one another, as the Examiner has attempted to do." Ex. C, '101 pat. File History, Appeal Brief (March 8, 2019), p. 7-8. Thus, Champion clearly narrowed the definition of "valve assembly" to require a handle and be separate from the selector switch. *See Advanced Fiber Techs. (AFT) Tr. v. J & L Fiber Servs., Inc.*, 674 F.3d 1365, 1376 (Fed. Cir. 2012).

Accepting Champion's broader construction would permit valves without handles to be covered, which would improperly allow it to recapture scope surrendered during prosecution. *See id.*

3. "a mechanical fuel valve"

HFT's Proposed Construction	Champion's Proposed Construction
"a single mechanical fuel valve"	Plain and ordinary meaning or "a mechanical device that allows control of one or more fuel flows"

The term "a mechanical fuel valve" requires construction because Champion narrowed the meaning to refer to a "single" valve during prosecution, creating a prosecution disclaimer that limits the claim's scope. *See Phillips*, 415 F.3d at 1317.

Claim 1 of the '780 patent requires "a mechanical fuel valve actuateable between a first position and a second position to selectively control fuel flow to the dual fuel engine from a first fuel source through a first fuel line and a second fuel source through a second fuel line." The claims consistently refer to "a mechanical fuel valve" in singular form throughout the patent family. The specification reinforces this single valve construction, showing that the mechanical fuel valve 54 operates as a single valve controlling multiple fuel sources:

> Mechanical fuel lockout switch 38, FIG. 2, includes mechanical fuel valve 54 actuateable between first position 38(*a*) as shown in FIG. 2 and second position 38(*b*) as shown in FIG. 3 to selectively control fuel flow to the dual fuel engine from first fuel source 28 through a first fuel line and second fuel source 30 through a second fuel line 36.

'780 pat., col. 5:31-5:36, Fig. 2; *see also* col. 7:45-50.

Champion confirmed the narrow meaning of this term during prosecution, *Phillips*, 415 F.3d at 1317, by distinguishing prior art from the claim:

> [Prior art] discloses separate valves for the separate fuel sources – LPG fuel valve (A) and gas fuel valve (B), *see Champion*, p. 14, ***but not a single mechanical fuel valve*** that actuates between a first position and a second position to selectively control fuel flow ….

Ex. D, '780 pat. File History, Applicant Arguments/Remarks Made in an Amendment (November 3, 2017), p. 12 (emphasis added).

Champion unmistakably surrendered during prosecution any interpretation of "a mechanical fuel valve" that includes more than one valve. *See Advanced Fiber Techs.*, 674 F.3d at 1376. Champion's proposed construction directly contradicts the prosecution history and would allow Champion to recapture the disclaimed scope that includes "separate valves." *See id.*; *Continental Circuits*, 915 F.3d at 799.

4. "fuel lockout apparatus"

HFT's Proposed Construction	Champion's Proposed Construction
This term should be construed under 35 U.S.C. § 112(f). Recited Function: "prevent the second fuel source from coupling to the second fuel line while the mechanical fuel valve is in the first position;" and "permit the second fuel source to couple to the second fuel line while the mechanical fuel valve is in the second position." Corresponding Structure: items 58, 61 in Figs. 2, 3, 4A, 4B, and equivalents thereof.	Plain and ordinary meaning or "an apparatus that prevents selection of more than one fuel source"

The term "fuel lockout apparatus" requires construction as a Section 112(f) "means-plus-function limitation." Section 112(f) provides special rules for "means-plus-function limitations" that apply when claims describe only functions (what something does) without describing structure (what something is). Under 35 U.S.C. § 112(f), such claim elements "shall be construed to cover the corresponding structure, material, or acts described in the specification and equivalents thereof."

For claim terms that do not use the word "means," there is a rebuttable presumption that Section 112(f) does not apply, but the presumption is overcome "if the challenger demonstrates that the claim term fails to 'recite [] sufficiently definite

structure' or else recites 'function without reciting sufficient structure for performing that function.'" *Williamson v. Citrix Online, LLC*, 792 F.3d 1339, 1348 (Fed. Cir. 2015). "[G]eneric terms … that reflect nothing more than verbal constructs may be used in a claim in a manner that is tantamount to using the word 'means' because they 'typically do not connote sufficiently definite structure.'" *Id.* at 1350. *Williamson* cites the Manual of Patent Examining Procedure § 2181, which explains that "[t]he presumption may be overcome if the claim limitation uses a generic placeholder (a term that is simply a substitute for the term 'means')" and provides a list of such generic placeholders, including "apparatus." Ex. E. Because, when considering the entire claim, the claim term does not recite or connote any structure for "fuel lockout apparatus," it should be construed as a means-plus-function limitation per Section 112(f).

Claim 1 of the '780 patent recites a "fuel lockout apparatus coupled to the mechanical fuel valve."[8] The term "apparatus" provides no structural meaning. *Id.* The addition of "fuel lockout" as a modifier does not cure this structural deficiency because it is undefined and not a term that connotes a specific structure. Ex. B, Shaver Decl. ¶ 55. A POSITA would not understand "fuel lockout apparatus" to connote *any* structure, let alone structure that performs the recited function in the claims. *Id*. The term must be construed per Section 112(f).

Under Section 112(f), courts must first identify the recited claimed function and determine what structure disclosed in the specification corresponds to that function. *Williamson*, 792 F.3d at 1351. For some claims here, the "wherein clauses" recite the function: "***prevent*** the second fuel source ***from coupling to the second fuel line*** while the mechanical fuel valve is in the first position" and "***permit*** the second fuel source ***to couple to the second fuel line*** while the mechanical fuel valve is in the second position." *See* '780 patent, claims 1, 6, 15; '895 patent, claims 1, 6-7. In other

[8] This term also appears in every asserted claim of the '780 and '895 patents, as well as claims 6 and 7 of the '654 patent.

claims, the "configured to" clauses recite the function with slight variation: "***prevent actuation of the mechanical fuel valve*** to the first position when the second fuel source is in communication with the dual fuel engine." *See* '780 pat., claim 8; '895 pat. claims 8, 12-13; *see also* '654 pat., claims 6, 7.

As illustrated below, the specification discloses a structure corresponding to the recited functions: items 58 (fuel lockout apparatus), 61 (fuel inlet cover) in Figures 2, 3, 4A, 4B, as described at '780 pat., col. 5:37-64; 6:10-31; 6:42-7:17; 7:54-67; 8:49-64. Ex. B, Shaver Decl. ¶¶ 56, 62.

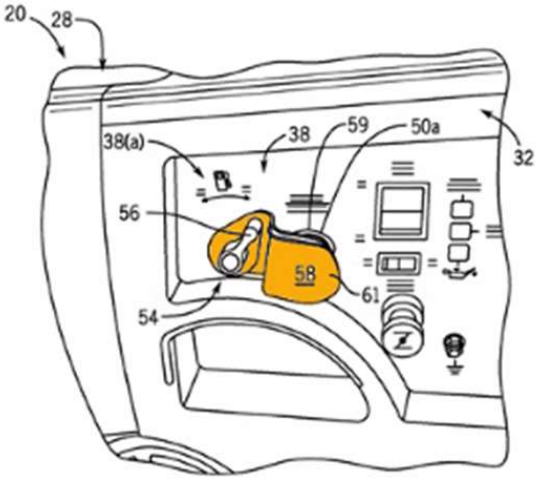

FIG. 2

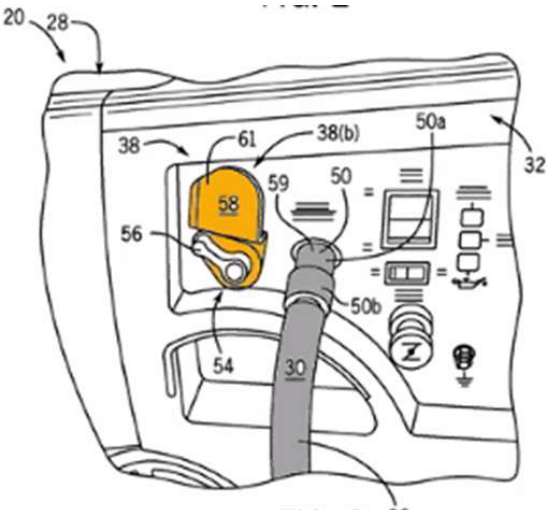

FIG. 3

Champion's construction fails because it repeats the generic term "apparatus," while rewriting the claim language to concoct a new function ("prevents selection of more than one fuel source") that is too generic and does not meet the claim language. This contradicts *Williamson*'s requirement that courts analyze whether claim terms provide adequate structural guidance and violates *Phillips* by divorcing the claim language from the '780 patent specification's structural disclosure of items 58, 61 as the mechanical components that perform the claimed function.

5. "from coupling"/"coupling"/"to couple"

HFT's Proposed Construction	Champion's Proposed Construction
"from attaching"/ "attaching"/ "to attach"	Plain and ordinary meaning or "two or more components directly or indirectly interacting with each other"

These terms require construction because the parties dispute their meaning. *See O2 Micro*, 521 F.3d at 1360-63. HFT's construction is supported by intrinsic evidence that confirms "coupling" means "attaching." Champion's construction incorrectly includes mere indirect interactions without any physical attachment.

As noted above, the claims recite the claimed function for the fuel lockout apparatus. *See* '780 patent, claims 1, 6, 15; '895 patent, claims 1, 6-7. Claim 1 of the '780 patent requires the fuel lockout apparatus to "prevent the second fuel source from ***coupling*** to the second fuel line while the mechanical fuel valve is in the first position." Claim 1 also recites a "fuel lockout apparatus ***coupled*** to a mechanical fuel valve." The claim language itself shows that "coupling" is used in the context of physical attachment—preventing coupling to a fuel line, permitting coupling to a fuel line, preventing actuation of a valve.[9] The specification confirms this usage.

The specification uses "coupling" consistently to refer to a physical attachment of two structures: "to prevent coupling the first end 50a and second end 50b of the quick-disconnect hose coupling together" and "to permit ***attaching*** first end 50a and second end 50b together." '780 pat., col. 7:62-67. This same paragraph uses both "coupling" and "attaching" to describe the identical physical connection process, demonstrating that Champion intended these terms to have equivalent meaning. *See Baran v. Medical Device Technologies, Inc.*, 616 F.3d 1309, 1316 (Fed. Cir. 2010) (noting "implication [of different meanings] is overcome where, as here, the evidence indicates that the patentee used the two terms interchangeably").

[9] *See* '780 pat., claim 8; '895 pat., claims 8, 12-13; *see also* '654 pat., claims 6, 7.

During prosecution, Champion differentiated prior art by indicating "coupling" requires physical proximity rather than remote control. Ex. D, '780 pat. file history, Applicant Arguments/Remarks Made in an Amendment (May 15, 2018), p. 13 ("control/operation of these components by a common controller [in art] is not a 'coupling' as would be understood by one skilled in the art. Accordingly, there is simply no disclosure in Pursifull that three-way valve 120 is *coupled to* any fuel lockout apparatus – however defined by the Examiner – as called for in claims 1 and 19."). This comports with the specification's consistent interchangeable use of "coupling" with "connecting" or "attaching."

Extrinsic evidence supports HFT's construction. "Coupling" means "to link together; connect." Ex. F; *see also Phillips*, 415 F.3d at 1322 ("Dictionaries … are useful to assist in understanding the commonly understood meaning of words").

Champion's alternative construction attempts to impermissibly expand the term to include indirect interactions and does not require attachment or connection, which conflicts with the intrinsic evidence. *See Continental Circuits*, 915 F.3d at 799-800; *Advanced Fiber Techs.*, 674 F.3d at 1376.

6. "communicate"/"communication"

HFT's Proposed Construction	Champion's Proposed Construction
"allow fuel flow" / "fuel flow"	Plain and ordinary meaning or "[a] transfer of liquid, gas, or other material"

These terms require construction because the parties dispute construction. HFT's proposal is the simplest statement consistent with the intrinsic evidence. Unlike normal usage, the '780 patent specification consistently uses "communicate" specifically in fuel flow contexts. *See Phillips*, 415 F.3d at 1315-19. Champion's broader construction ("transfer of liquid, gas, or other material") ignores the context-specific meaning. HFT's proposed construction is simpler and clearer.

The claims use "communicate" exclusively in the context of fuel delivery between fuel sources and engines. The specification directly connects the term

"communicates" with fuel line operations: "fuel lockout apparatus 58 ***communicates*** first fuel source 28 to the engine ***by actuating mechanical fuel valve*** 54 to first position 38(a) ***to open the first fuel line***." '780 pat., col. 5:31-51 (emphasis added).

Champion's proposed alternative construction appears to recognize that "communication" relates to fuel flow, acknowledging it is the "transfer of material." As used in this patent, however, Champion's proposed construction is unnecessarily complicated. HFT's construction makes more sense in context with the rest of the claim.

7. "switch . . . to [enable changing/change] operation of the engine between gaseous fuel and liquid fuel"

HFT's Proposed Construction	Champion's Proposed Construction
"a device for making, breaking, or changing the connections in an electrical circuit that causes a change in operation"	Plain and ordinary meaning or "a physical structure arranged to allow a fuel selection"

This term requires construction because the parties dispute its meaning. *See O2 Micro*, 521 F.3d at 1360-63. The common understanding shown in the specification should control. *See Phillips*, 415 F.3d at 1314. Despite purporting to request "plain and ordinary meaning," Champion's proposed construction *ignores* the common understanding and the specification's use of this term.

The '398 patent's Claim 1 requires "a switch to change operation of the engine between gaseous fuel and liquid fuel." Unlike the coined term "selector switch" in the '101 patent, which refers to a mechanical barrier, this term should receive the commonly understood electrical meaning of "switch" because the specifications describe a traditional electric switch:

> Fuel switch 354 changes operation of the engine between LPG and gasoline, and combination switch 356 can operate to kill the engine. A ground terminal 358 connects to module 350 via a fourth connection

352(d) in order to ground fuel cut solenoid 74 via fuel switch 354 or combination switch 356.

’398 pat., col. 19:25-37 (emphasis added) (describing Fig. 14, shown below).

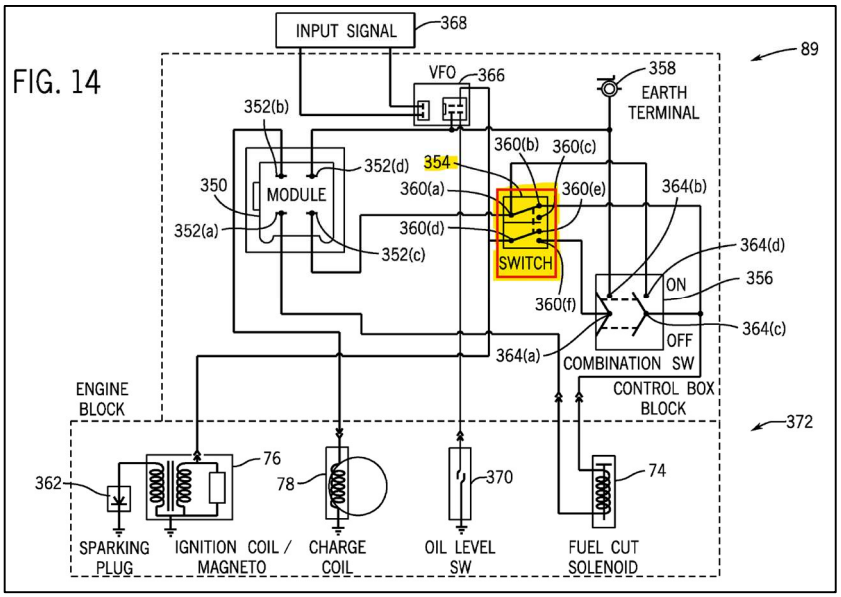

See also ’034 pat., col. 7:24-37 (“switch 54 couples power source 102 to LPG cutoff solenoid 98 and one or more of the gasoline cutoff solenoid 96 and carburetor cutoff solenoid 94 ***to change operation of the engine from liquid fuel to gaseous fuel and from gasoline fuel to liquid fuel*** while the engine is running.”) (emphasis added); *id*., col. 10:21-35 (“tri-fuel switch 120 can actuate any combination of the carburetor cutoff solenoid 94, LPG cutoff solenoid 98, NG cutoff solenoid 124 and gasoline cutoff solenoid 96 ***to change operation of the engine among the liquid fuel, the first gaseous fuel, and the second gaseous fuel***.”) (emphasis added).

“Switch” is defined in technical dictionaries consistent with the intrinsic evidence as “[a] mechanical device for opening and closing an electric circuit.” Ex. G. Dr. Shaver confirms this. *See* Ex. B, Shaver Decl. ¶¶ 71-80.

Champion’s suggestion that this term does not require construction is betrayed by its proposed alternative construction, which conflicts with the intrinsic evidence. It would require only a “physical structure” that allows a selection, rather than “changing the operation,” as required by the claim.

8. "rotating mechanical valve"

HFT's Proposed Construction	Champion's Proposed Construction
"a mechanical valve that actuates in a rotative motion free from linear motion"	Plain and ordinary meaning or "a mechanical device that allows control of one or more fuel flows and includes at least one rotating component"

This term requires construction because the parties dispute its meaning. *See O2 Micro*, 521 F.3d at 1360-63.

Claim 14 of the '145 patent requires "the manually actuated fuel shutoff comprises a ***rotating*** mechanical valve." The specification describes such a valve:

> "Manual fuel shutoff 110 may have a rotating shaft 112 that extends through an opening 178 in carburetor 62. A blocking member or valve tip 180 couples to shaft 112 in carburetor 62 to create a valve-shaft assembly 179. ***Valve tip 180 rotates parallel to inlet 174 of fuel passage 164 between a blocking position and non-blocking position to selectively block fuel flow into fuel passage 164***."

'145 pat., col. 13:34-45 (emphasis added). Importantly, the specification specifically defines rotating mechanical valves as "free from linear motion" and distinguishes them from sliding valves:

> "Manual fuel shutoff 110 ***actuates in a rotative motion free from linear motion*** in part to ensure fuel will not leak through primary o-ring 196 or secondary o-ring 198. ***Compared to a sliding valve, a rotating valve***, such as manual fuel shutoff 110, reduces the likelihood that fuel will leak from carburetor 62."

Id., col. 14:6-23 (emphasis added); *see also id.*, col. 14:57-15:2.

Champion's proposed alternative construction fails because it allows for linear motion by requiring only a rotating "component." This is inconsistent with the intrinsic evidence because it ignores the specification's statement that the valve being "free from linear motion" is a technical advantage of the alleged invention.

9. "pressure regulator"

HFT's Proposed Construction	Champion's Proposed Construction
"a device that reduces and controls the pressure of gaseous fuel"	Plain and ordinary meaning or "a device that controls pressure"

This term requires construction because the parties' proposed constructions are in conflict. *See O2 Micro*, 521 F.3d at 1360-63.

The claims consistently use "pressure regulator" in connection with controlling and ***reducing*** pressure of gaseous fuel being supplied to the engine in a generator. For example, Claim 11 of the '034 patent requires "a fuel regulator system comprising: a primary pressure regulator coupled to a service valve of the pressurized fuel source to regulate fuel supplied from the pressurized fuel source to a ***reduced pressure***." As another example, Claim 1 of the '985 patent recites " ... the fuel regulator system configured to: regulate the gaseous fuel supplied from the pressurized fuel source in the first stage, the gaseous fuel regulated down to a ***reduced pressure in the first stage***; and regulate the reduced pressure gaseous fuel in the second stage, the reduced pressure gaseous fuel from the first stage ***regulated down to a desired pressure in the second stage*** for delivery ..."

The specifications discuss pressure regulators exclusively in gaseous fuel contexts, demonstrating consistent technical usage. The '034 patent specification describes the pressure reduction function:

> Fuel regulator system 56 includes one or more pressure regulators that ***reduce and control the pressure*** of the fuel from pressurized fuel container 50 and delivers fuel at a desired pressure for operation of the engine."

'034 pat., col. 4:9-32 (emphasis added); *see also* '780 pat., col. 4:20-60. Every reference in both specifications confirms these regulators "reduce and control the pressure of the fuel from pressurized fuel container" for gaseous fuel delivery.

Champion's alternative construction recognizes that the pressure regulators control pressure but fails to acknowledge that they must also reduce pressure

Champion's attempt to claim more than its disclosure conflicts with the intrinsic evidence.

10. "integral components of"

HFT's Proposed Construction	Champion's Proposed Construction
"included as a part of"	Plain and ordinary meaning

This term requires construction to clarify the relationship between pressure regulator components based on the specification's technical usage, as opposed to leaving it up to the jury to interpret the term per ordinary meaning. *Phillips*, 415 F.3d at 1330.

Claim 17 of the '985 patent requires that "the primary and secondary pressure regulator are integral components of a dual stage pressure regulator." The specification is clear regarding the embodiment of claim 17: "In some embodiments of the invention, a dual stage pressure regulator 162 ***functions as both*** a primary pressure regulator and a secondary pressure regulator ***in a single integral component***." '985 pat., col. 10:28-32 (emphasis added). The claim language requires that the primary and secondary regulators be "integral components of a dual stage pressure regulator," and the specification explains what this means: the regulators function together as parts of "a single integral component." In other words, separate regulators are parts of one unified dual stage regulator, not merely essential or important to its operation.

The word "integral" has a broader meaning in normal usage. *See* Ex. H (defining "integral" as "essential to completeness; made up of components that together make a whole"); *see also* Ex. I (providing multiple meanings and usages for "integral"). The specification, however, is clear that the patent's use of integral is narrower. It is not enough that the components are "essential" or "fundamental"; they must be part of a single regulator.

Champion's "plain and ordinary meaning" approach fails because it leaves to the jury to decide whether it is sufficient for the pressure regulator components to

to be important to function rather than part of a single regulator. Allowing a jury to construe or apply a broader meaning that is inconsistent with the intrinsic evidence runs afoul of *Phillips*. Moreover, construction is required given the apparent dispute between the parties. *See Nature Simulation Sys. Inc. v. Autodesk, Inc.*, 50 F.4th 1358, 1363 (Fed. Cir. 2022) ("When the meaning or scope of a patent claim is disputed by litigants, the judicial role is to construe the claim as a matter of law, on review of appropriate sources of relevant information.").

B. Indefinite Terms

A patent's claims are indefinite if the "claims, read in light of the specification delineating the patent, and the prosecution history, fail to inform, with reasonable certainty, those skilled in the art about the scope of the invention." *Nautilus, Inc. v. Biosig Instruments, Inc.*, 572 U.S. 898, 901 (2014). Definiteness is evaluated from the perspective of someone skilled in the relevant art when the patent was filed. *Id.* at 908.

Patents must be precise enough to afford clear notice of what is claimed, thereby "'appris[ing] the public of what is still open to them.'" *Id.* at 909 (citation omitted). "Otherwise there would be '[a] zone of uncertainty which enterprise and experimentation may enter only at the risk of infringement claims.'" *Id.* at 909-10 (citation omitted). The standard "mandates clarity, while recognizing that absolute precision is unattainable" and accords with the principle that "'the certainty which the law requires in patents is not greater than is reasonable, having regard to their subject-matter.'" *Id.* at 910 (citation omitted).

1. "gaseous cutoff"

The term "gaseous cutoff" should be held indefinite because Champion's prosecution amendments created uncertainty as to this term that cannot be resolved from the '034 patent specification. *See TVnGO Ltd. (BVI) v. LG Elecs. Inc.*, 861 F. App'x 453, 458-59 (Fed. Cir. 2021) (affirming district court's holding that two claim

terms were indefinite because the terms were added during prosecution but never appeared in the specification, providing a skilled artisan no intrinsic guidance).

Claim 1 recites "a gaseous cutoff coupled to open and close a gaseous fuel source to the engine." In Champion's original patent application, claim 1 recited a "gaseous cutoff solenoid"[10] until it chose to delete the word "solenoid" from the claims with the last amendment before the patent was issued. *See* Ex. J, '034 pat. File History, Amendment / Response to Office Action Mailed January 25, 2019 (April 25, 2019), p. 2.

The specification never uses the term "gaseous cutoff." Instead, the specification uses the term "gaseous cutoff solenoid," but only in two locations where it appears the claim language from prior to the last amendment is just parroted with no discussion of the embodiments. *Fintiv, Inc. v. PayPal Holdings, Inc.*, 134 F.4th 1377, 1383-84 (Fed. Cir. 2025) (specification did not "provide sufficiently definite structure" for claim term where "the sole textual support in the specification … merely parrot[ed] the claim language"). Champion's deletion of "solenoid" from Claim 1 of the '034 patent during prosecution creates irreconcilable uncertainty about the scope and meaning of "gaseous cutoff," failing the *Nautilus* standard for reasonable certainty.

The term "gaseous cutoff" has no commonly accepted meaning to a POSITA. *See* Ex. B, Shaver Decl. ¶¶ 84-90. This situation parallels *Mantissa Corp. v. First Financial Corp.*, where the Federal Circuit found a term indefinite when it had "no commonly accepted definition," was not used in the specification or priority applications, and was first introduced via amendment years after the original filing. No. 2022-1963, 2024 WL 607717, *3–*4 (Fed. Cir. Feb. 14, 2024). The *Mantissa* court held the term indefinite because "the specification and claims fail to provide adequate guidance as to the identity of the [disputed term]" and a POSITA could "not

[10] A solenoid is an electromagnet that can be used to open and close a valve.

identify with reasonable certainty the identity of what the term refers to." *Id* at *4. Here, like in *Mantissa*, Champion's "gaseous cutoff" has no commonly accepted definition, does not appear in the specification, and was introduced through prosecution amendments that created, rather than resolved, structural uncertainty. The only way to determine the meaning is to re-write the term.

Champion's alternative construction—"a device that allows control of gaseous fuel flow, e.g., to open and close a gaseous fuel source to the engine"—cannot cure the indefiniteness because it effectively renders the term purely functional. Its alternative would still require construction to inform the jury as to the scope because it provides no structural guidance whatsoever. *See Medicines Company v. Mylan, Inc.*, 853 F.3d 1296, 1308 (Fed. Cir. 2017) (holding functional limitations objectionable where the claim would have "a potential scope of protection beyond that which is justified by the specification disclosure").

2. "coupled to [verb]"

The claims that use the term "coupled to" followed by a verb but not by any other structure should be held indefinite because they *fail to identify a structure to which the recited structure is coupled*. This does not provide sufficient guidance to "inform those skilled in the art about the scope of the invention with reasonable certainty." *Nautilus*, 572 U.S. at 910.

The '034 patent's claim 1 recites "a gaseous cutoff coupled to open and close a gaseous fuel source to the engine." There is no structure recited to which the "gaseous cutoff" is coupled. This stands in contrast to other limitations in the same claim: "a liquid cutoff solenoid ***coupled to the carburetor*** to open and close a liquid fuel path to the engine downstream from the float bowl"; and "a switch selectively ***coupling a power source to the liquid cutoff solenoid*** to open and close the liquid fuel path." '034 pat, claim 1 (emphasis added). These other limitations clearly set forth the structures that are being coupled.

As noted above, "coupled" requires either attachment between two structures (e.g. "fuel lockout apparatus coupled to a mechanical fuel valve") under HFT's construction or "two or more components directly or indirectly interacting with each other" as argued by Champion. Under either construction, a POSITA would not understand the scope of claims using this term, given the failure to identify a second component to which a recited component is coupled. *See* Ex. B, Shaver Decl. ¶¶ 91-99.

The claim language creates structural uncertainty that prevents definite claim construction under the *Nautilus* standard. *See Mantissa*, 2024 WL 607717, at *2–*4 (holding the claim term "transaction partner" indefinite because it did not appear in the specification and could refer to any of the examples of users in the specification; without intrinsic guidance, POSITAs could not identify a "transaction partner" with reasonable certainty); *TVnGO Ltd.*, 861 F. App'x at 458-59 (holding claim terms were indefinite because they were added during prosecution but never appeared in the specification). First, the term "gaseous cutoff coupled to open and close a gaseous fuel source to the engine" does not appear anywhere in the specification. Second, the specification does not disclose the structure to which the "gaseous cutoff" is coupled, leaving POSITAs without guidance about the coupling relationship. The prosecution history also does not shed light on this term. Without clear boundaries established in the intrinsic evidence, skilled artisans would be unable to determine the scope of "coupling to," violating the reasonable certainty standard established in *Nautilus*.

Champion's alternative—"arranged in a way to perform a desired action, e.g., to 'open and close a gaseous fuel source to the engine'"—fails because it uses a third construction for "coupling" that is inconsistent with that discussed above and cannot cure the fundamental uncertainty about the scope of the claims that use this phrasing of "coupling to." None of the evidence provided by Champion suffices to inform a POSITA what its alternative construction means. Hence, even under Champion's alternative, the claim remains indefinite. *See Horizon Pharma, Inc. v. Dr. Reddy's*

Lab'ys Inc., 839 F. App'x 500, 505 (Fed. Cir. 2021) (affirming district court's finding of indefiniteness where the relevant clause, when properly construed, was "incomprehensible"). The specification's complete failure to address the claim language creates indefiniteness that cannot be remedied through claim construction.

V. CONCLUSION

For the foregoing reasons, HFT respectfully requests that the Court adopt HFT's proposed constructions.

DATED: September 9, 2025

QUINN EMANUEL URQUHART & SULLIVAN, LLP

By /s/ David M. Grable

QUINN EMANUEL URQUHART & SULLIVAN, LLP
David M. Grable (SBN 237765)
davegrable@quinnemanuel.com
Lauren Lindsay (SBN 280516)
laurenlindsay@quinnemanuel.com
865 South Figueroa Street, 10th Floor
Los Angeles, CA 90017-2543
Telephone: (213) 443-3000
Facsimile: (213) 443-3100

QUINN EMANUEL URQUHART & SULLIVAN, LLP
Eric Huang (*pro hac vice*)
erichuang@quinnemanuel.com
Jason Williams (*pro hac vice*)
jasonwilliams@quinnemanuel.com
295 5th Avenue
New York, NY 10016-7103
Telephone: (212) 849-7000
Facsimile: (212) 849-7100

Attorneys for Plaintiff
Harbor Freight Tools USA, Inc.

CERTIFICATE OF COMPLIANCE

The undersigned, counsel of record for Harbor Freight Tools USA, Inc., certifies that this brief contains 7145 words, which complies with the word limit set by the parties' joint stipulation filed on September 5, 2025.

DATED: September 9, 2025

QUINN EMANUEL URQUHART & SULLIVAN, LLP

By /s/ *David M. Grable*
David M. Grable
Attorneys for Plaintiff Harbor Freight Tools USA, Inc.

CERTIFICATE OF SERVICE

I, David M. Grable, hereby certify that on this September 9, 2025, a copy of foregoing **Plaintiff Harbor Freight Tools USA, Inc.'s Opening Claim Construction Brief** was served via email on all attorneys of record.

/s/ David M. Grable
David M. Grable
Attorneys for Plaintiff Harbor Freight Tools USA, Inc.